September 11, 2013

STATE OF RHODE ISLAND AND PROVIDENCE PLANTATION
DEPARTMENT OF ADMINISTRATION

DIVISION OF PURCHASES BID NO. 7497392

RHODE ISLAND DEPARTMENT OF TRANSPORTATION

RHODE ISLAND CONTRACT NO.2013-CB-080

FEDERAL-AID PROJECT NO. FAP Nos: BHO-0084(003), STP-RESF(275), STP-TEA3(039)

Kent Dam Spillway Bridge No. 84 & Scituate Ave 1R

Along Scituate Avenue (Route 12), from approximately Sta. 3+50 to Sta. 45+75

CITY/TOWN OF Scituate

COUNTY OF PROVIDENCE

NOTICE TO PROSPECTIVE BIDDERS

ADDENDUM NO. 1 Prospective bidders and all concerned are hereby notified of the following changes in the Plans, Specifications, Proposal and Distribution of Quantities for this contract. These changes shall be incorporated in the Plans, Specifications, Proposal and Distribution of Quantities, and shall become an integral part of the Contract Documents.

A. Clarification

1. Pre-Bid Conference Sign-In Sheet

   Attached is a copy of the Pre-Bid Conference sign-in sheets.

B. Contract Documents

1. CS-Pages

   a. Page CS Index

      Remove page CS Index in its entirety and replace it with revised page CS Index (R-1) attached to this Addendum No. 1. The CS Index has been revised.

   b. Page CS-5

      Remove page CS-5 in its entirety and replace it with revised page CS-5 (R-1) attached to this Addendum No. 1. Section 10 has been deleted.

   c. Pages CS-9 and CS-10

      Remove pages CS-9 and CS-10 in their entirety and replace them with revised pages CS-9 (R-1) and CS-10 (R-1) attached to this Addendum No. 1. Section 18 has been revised.

   d. Page CS-16

      Remove page CS-16 in its entirety and replace it with revised page CS-16 (R-1) attached to this Addendum No. 1. Section 37 has been added.

   e. Appendix E

Insert new Appendix E attached to this Addendum No. 1. Appendix E "Pavement Cores" has been added.

2. JS-Pages

a. Pages JS-i, JS-ii, and JS-iii

Remove pages JS-i, JS-ii, and JS-iii in their entirety and replace them with revised pages JS -i (R-1), JS-ii (R-1), and JS-iii (R-1) attached to this Addendum No. 1. The JS index has been revised.

b. Pages JS-2 and JS-3

Remove pages JS-2 and JS-3 in their entirety and replace them with revised pages JS-2 (R-1) and JS-3 (R-1) attached to this Addendum No. 1. This Special Provision has been deleted.

c. Pages JS-19 and JS-20

Remove pages JS-19 and JS-20 in their entirety and replace them with revised pages JS-19 (R-1) and JS-20 (R-1) attached to this Addendum No. 1. The Special Provision for Code 201.9911 "Old Scituate Avenue Pavement Removal" has been revised.

d. Pages JS-30 - JS-33

Remove pages JS-30, JS-31, JS-32, and JS-33 in their entirety and replace them with revised pages JS-30 (R-1), JS-31 (R-1), JS-32 (R-1), and JS-33 (R-1) attached to this Addendum No. 1. These Special Provisions have been deleted.

e. Page JS-67a - JS-67n

Insert new pages JS-67a - JS-67n attached to this Addendum No. 1. Section 607 "Mass Concrete" has been added.

f. Pages JS-69 - JS-72

Remove pages JS-69, JS-70, JS-71, and 72 in their entirety and replace them with revised pages JS-69 (R-1), JS-70 (R-1), JS-71 (R-1), and JS-72 (R-1) attached to this Addendum No. 1. The Special Provision for Item Codes 803.9901 "Remove and Dispose Portions of Existing Concrete Superstructure" and 803.9902 "Remove and Dispose Portions of Existing Concrete Substructure" have been revised.

g. Pages JS-85a and JS-85b

Insert new pages JS-85a and JS-85b attached to this Addendum No. 1. Item Codes 903.9902 "Temporary Chain Link Fence, 6 FT. High" and 903.9903 "Temporary Chain Link Fence Gate, 6 FT. High, 20 FT. Wide" have been added.

h. Pages JS-90 and JS-91

Remove pages JS-90 and JS-91 in their entirety and replace them with revised pages JS-90 (R-1) and JS-91 (R-1) attached to this Addendum No. 1. This Special Provision has been removed.

i. Pages JS-91a and JS-91b

Insert new pages JS-91a and JS-91b attached to this Addendum No. 1. Item Code 931.99 "Cleaning and Sweeping Pavement" has been added.

C. Distribution of Quantities

1. Index Pages 1-3

Remove Index Pages 1, 2, and 3 in their entirety and replace them with revised Index Pages 1 (R-1), 2 (R-1), and 3 (R-1) attached to this Addendum No.1. The Index has been revised.

2. Page 3

   Remove page 3 in its entirety and replace it with revised page 3 (R-1) attached to this Addendum No. 1. The quantities for Item Codes 201.9903 "Remove and Stockpile Drum Barricade Std. 26.2.0 with Flashing Warning Lights Left in Place" and 201.9904 "Remove and Stockpile Precast Concrete Median Barrier for Temp. Traffic Control Std. 40.5.0 Left in Place" have been revised.

3. Page 14

   Remove page 14 in its entirety and replace it with revised page 14 (R-1) attached to this Addendum No. 1. The quantity for Item Code 702.0955 "Adjust Electrical Manhole to Grade" has been revised.

4. Page 23

   Remove page 23 in its entirety and replace it with revised page 23 (R-1) attached to this Addendum No. 1. The quantities for Item Codes 914.5010 "Flagpersons" and 914.5020 "Flagpersons - Overtime" have been revised.

5. Pages 25 and 25a

   Remove page 25 in its entirety and replace it with revised page 25 (R-1) and insert new page 25a attached to this Addendum No. 1. The quantities for Item Code 923.0120 "Plastic Pipe Barricade Standard 26.3.0" have been revised.

6. Page 26

   Remove page 26 in its entirety and replace it with revised page 26 (R-1) attached to this Addendum No. 1. The quantity for Item Code 929.0110 "Field Office" has been revised.

7. Pages 31 and 32

   Remove page 31 in its entirety and replace it with revised page 31 (R-1) and insert new page 32 attached to this Addendum No. 1. Item Codes 808.1509 "Concrete Superstructure Class HP 3/4" Walls", 821.1690 "Saw and Sealing Joints in Bituminous Concrete Pavement", 903.9902 "Temporary Chain Link Fence, 6 FT. High", 903.9903 "Temporary Chain Link Fence Gate, 6 FT. High, 20 FT. Wide", and 923.0130 "Precast Median Barrier For Temporary Traffic Control Std. 40.5.0" have been added.

D. Drawings/Plans - Change/Addition

1. Sheet No. 9 - General Plan No. 1

   Remove Sheet No. 9 in its entirety and replace it with revised Sheet No. 9 (R-1) attached to this Addendum No. 1. The Temporary Chain Link Fence and Gate have been added.

2. Sheet No. 10 - General Plan No. 2

   Remove Sheet No. 10 in its entirety and replace it with revised Sheet No. 10 (R-1) attached to this Addendum No. 1. The Precast Median Barriers for Temporary Traffic Control have been added.

3. Sheet No. 16 - General Plan No. 8

   Remove Sheet No. 16 in its entirety and replace it with revised Sheet No. 16 (R-1) attached to this Addendum No. 1. An existing manhole and associated call-out have been added.

4. Sheet No. 17 - General Plan No. 9

   Remove Sheet No. 17 in its entirety and replace it with revised Sheet No. 17 (R-1) attached to this Addendum No. 1. The Temporary Chain Link Fence and Gate and the 6' Chain Link Fence Reset From Stockpile have been added.

5. Sheet No. 33 - Bridge Standard Notes Sheet 2

   Remove Sheet No. 33 in its entirety and replace it with revised Sheet No. 33 (R-1) attached to this Addendum No. 1. The Concrete Deck and Slab Note has been added.

6. Sheet No. 47 - Utility Room Plan and Details

   Remove Sheet No. 47 in its entirety and replace it with revised Sheet No. 47 (R-1) attached to this Addendum No. 1. The Item Code "808.1509" has been added to Cross Wall notes.

7. Sheet No. 52 - Miscellaneous Details - 1

   Remove Sheet No. 52 in its entirety and replace it with revised Sheet No. 52 (R-1) attached to this Addendum No. 1. PVC Drain Notes have been added.

RI Department of Transportation
Chief Engineer

ADDENDUM NO. 1

State of Rhode Island
Division of Purchases
One Capitol Hill
Providence, RI 02908

"NON-MANDATORY" PRE-BID CONFERENCE SIGN-IN SHEET

BID NUMBER:	7497392
BID TITLE:	Kent Dam Spillway, 4 Scituate Ave RI
PRE-BID DATE AND TIME:	9/6/2013 9:00 Am

Purchasing Representative:	Lisa Gill
Pre-bid START TIME:	9:00 A.M
Pre-bid END TIME:	9:50

	COMPANY NAME	COMPANY REPRESENTATIVE	ADDRESS	CONTACT E-MAIL	CONTACT PHONE NUMBER	CONTACT FAX NUMBER	PROPOSAL SUBMITTED (For Purchasing Use Only)
1	RIDOT	Gary Garzone	2 Capitol Hill		222-3260		
2	CARDI	RAY GIORDANO	400 LINCOLN AVE WARWICK RI	RGIORDANO @ CARDI.COM	739 8300		
3	MANAFORT	ART SCOTTON	24 MARTIN ST. CUMBERLAND RI	ASCOTTON @ MANAFORT.com	333-2550		
4	D'Ambra	Lee Taylor	800 Jefferson Blvd WARWICK RI	LTaylor @ d-ambra.com	737-1300	732-4725	
5	John Rocchio	Bob Pion	20 Lark Ind. Partway smith RI	Bob Pion @ John Rocchio Corp.com	949-5565	949-5310	
6	CEC	Nikone Soupharath	400 SMITH ST. PROV. RI	NSOUPHARATH @ COMMONWEALTH-ENG.com	273-6600		
7	CEEC	Witold Klockowski	"	WKLOCZKOWSKI @ COMMONWEALTH-ENG.COM			
8	RIDOT	Pamela Brooks	2 Capitol Hill Prov, RI	pamela.brooks@ dot.ri.gov	222-2023 x4660		
9	RIDOT	BRAD OWENS	"	Brad.Owens@DOT.RI.GOV.	" x4084		
10	Crossman Eng	Bill Crohon	151 Centerville Road Warwick	billc@crossmaneng.com	738-5660		
11	JHLynch	Jim Dervay	2 Lynch Place Cumberland RI	Sales@jhlynch	401 333-4300		
12	Providence Water	Leo Fontaine	552 Academy Ave Providence RI	lfontaine@provwater.com	→ 521-6300		
13	Prov. Water	Pete LePage	522 Academy Ave., Prov.	plepage@provwater.com	521-6300		
14	Wallace Const	MARK Soares	206B King Philip ST, Prov. RI	marks@wallacecorpri.com	401 228 7880	228 7882	
15							

Rev: 4/30/13

** VENDOR: PLEASE SUBMIT A BUSINESS CARD IF AVAILABLE**

INDEX
SPECIAL PROVISIONS CONSTRUCTION GENERAL

1.	BRIEF SCOPE OF WORK	CS-1
2.	LIST OF CONTRACT DOCUMENTS	CS-1
3.	COMPLETION DATES	CS-3
4.	LUMP SUM BID ITEMS	CS-3
5.	UNIT BID ITEM AND LUMP SUM BID ITEM PAYMENTS	CS-3
6.	REQUEST FOR INFORMATION (RFI)	CS-3
7.	SCHEDULE LEVEL	CS-5
8.	PRECAST CONCRETE COMPONENTS	CS-5
9.	REQUIRED CERTIFICATIONS	CS-5
10.	(DELETED)	CS-5
11.	UTILITY AND MUNICIPAL NOTIFICATION AND COORDINATION	CS-6
12.	ELECTRICAL FACILITIES	CS-6
13.	COORDINATION WITH OTHER CONTRACTORS	CS-6
14.	SPECIALTY ITEMS	CS-7
15.	WINTER SHUTDOWN	CS-7
16.	SEQUENCE OF CONSTRUCTION	CS-7
17.	SITE ACCESS	CS-9
18.	EXISTING BRIDGE WEIGHT RESTRICTIONS AND ACCESS	CS-9
19.	STORAGE OF CONSTRUCTION MATERIAL AND/OR EQUIPMENT	CS-10
20.	USE OF EXPLOSIVES	CS-10
21.	WORK ADJACENT TO AND ABOVE ROADWAYS AND WATERWAYS	CS-11
22.	WORK ZONE LIGHTING	CS-11
23.	SPECIAL REQUIREMENTS FOR TRAFFIC MAINTENANCE AND PROTECTION	CS-11
24.	INCIDENT MANAGEMENT	CS-12
25.	TRAFFIC FINES IN WORK ZONE	CS-12
26.	LOCAL POLICE COMPENSATION	CS-12
27.	SPECIAL REQUIREMENTS FOR PAVEMENT MARKINGS	CS-12
28.	CONTRACTOR'S RESPONSIBILITY FOR DAMAGED STORM DRAINS	CS-13
29.	CONTRACTOR’S RESPONSIBILITY FOR DAMAGED UTILITY FACILITIES	CS-13
30.	INSPECTION ACCESS	CS-13
31.	STABILIZATION OF DISTURBED AREAS AND DUST CONTROL	CS-14
32.	RIGHT-OF-WAY AND DAMAGE TO PROPERTY	CS-15
33.	SHOP DRAWING SUBMITTALS	CS-15
34.	DOCUMENT MANAGEMENT AND CONTROL	CS-15
35.	ENVIRONMENTAL PERMITS	CS-15
36.	TRANSPORTATION MANAGEMENT PLAN	CS-16
37.	CLEANING AND SWEEPING PAVEMENT	CS-16

Appendix A – List of Shop Drawings and Submittals
Appendix B – Permits
Appendix C – Stormwater Pollution Prevention Plan (SWPPP)
Appendix D – Level 3 Transportation Management Plan
Appendix E – Pavement Cores

Contractor shall allow up to 30 days review and response time for RFI's, however, the Department will endeavor to respond in a timely fashion to RFI's. If the Engineer determines that an RFI is inappropriate or should be submitted in another format, the RFI will be returned unanswered to the Contractor for re-submittal on the proper form and in the proper manner.

Department's Response to RFI's

A Request for Information Log will be maintained by the PMP system, and that system will assign a number for each RFI. If the Engineer determines that an RFI is improper or frivolous, the RFI will be returned to the Contractor unanswered; however, all RFI's will be numbered and entered in the Log.

7. SCHEDULE LEVEL

This project is identified as "Schedule Level B", as described in Section 12.108.03 of the RI Department of Administration Procurement Regulations at Section 12.

8. PRECAST CONCRETE COMPONENTS

For concrete components shown as cast-in-place construction, the Contractor may propose an alternative precast construction method and details as part of a Value Engineering Proposal, in accordance with the applicable requirements of the Special Provisions.

9. REQUIRED CERTIFICATIONS

Subject to Paragraph 8 above, the Contractor is alerted that certain certification requirements are included in this contract, including but not limited to the following:

- Concrete precasting plants shall be PCI Category B4 certified, as further described on the plans.

10. (DELETED)

Q. The Contractor shall maintain access to PWSB property for PWSB personnel throughout the duration of construction.

17. SITE ACCESS

The Contractor shall note that access to the site(s) is limited. The Contractor shall make a thorough site visit to assess and evaluate size and type of equipment and/or personnel necessary for the construction of this project prior to submitting a bid.

The Contractor shall not at any time encroach upon adjacent private properties and shall at all times operate within the limits of the project.

If the Contractor's proposed means and methods extend beyond the project limits he shall be responsible for obtaining any and all additional permits as necessary to access any portion of the construction site utilizing their selected means. There will be no additional compensation for costs that may be incurred as a result of any operation necessitated to provide for said access other than those shown in the Contract Documents.

All costs associated with any additional permits shall be borne by the Contractor. Delays associated with the acquisition of such permits or the respective construction operations will not be considered a basis for schedule adjustments or waiver of liquidated damages.

All costs associated with the Contractor's means and methods for job site access will be considered incidental to associated items in the proposal; there will be no separate payment for these means and methods.

18. EXISTING BRIDGE WEIGHT RESTRICTIONS AND ACCESS

The Contractor shall take special notice that the existing Kent Dam Bridge No. 84, although not currently posted with any weight restriction, consists of significantly deteriorated components. No additional compensation will be given to the Contractor resulting from any access restrictions of the Bridge that may limit its operations or the timely completion of its obligations.

In the event that the Contractor deems it necessary to access the bridge with vehicles and equipment during construction, then the Contractor shall provide calculations bearing the stamp of a Professional Engineer (registered in the State of Rhode Island) demonstrating that no components of the Bridge will be overstressed by such access. To that end it is emphasized that all computations shall account for the reduction in capacity resulting from the deteriorated condition of the various components at the time the calculations are performed. The Engineer will be the sole judge as to whether the computations and assumptions therein are acceptable, and the State does not waive any claims against the Contractor for damages resulting there from. Should the Engineer, at his discretion, elect to reject the findings of the calculations, it shall be no cause for any additional compensation to or any extension of time for the Contractor. Upon request, RIDOT's latest Load Rating Calculations and most current inspection report will be made available for the Contractor's review at RIDOT Contracts and Specifications Section.

19. STORAGE OF CONSTRUCTION MATERIAL AND/OR EQUIPMENT

Unless indicated in the Contract Documents, there shall be no stockpiling of construction materials or equipment within the project limits shown on the plans without the written permission of the RIDEM and the PWSB. Evidence of this written permission shall be provided to the Engineer, as applicable.

There shall be no stockpiling or disposal of soils or construction debris within the project limits shown on the plans.

There shall be no parking of vehicles or storage of construction equipment under the dripline of any trees.

The Contractor shall not store materials or conduct operations outside the contract limits within the 200 foot riverbank wetland without the permission of RIDEM and the PWSB.

The Contractor shall be responsible for obtaining any and all additional permits and/or permit modifications as necessary for the storage of construction material and/or equipment. This includes the preparation of the requested quantity of all required submittal materials as well as professional certification of any of these materials. Where application may be made without RIDOT acting as applicant, the Contractor shall provide copies to the Engineer and the RIDOT Natural Resources Unit (the NRU) of all materials submitted in support of the permit application as well as copies of all permits or other decisions issued in response to the application. If any permit includes a stamped plan or plans, the original stamped plans shall be provided to the Engineer prior to conducting the approved work and will become the property of RIDOT. Any such plans will be kept in the RIDOT Field Office for the duration of the project, and will be forwarded to the NRU upon completion of the project. Where RIDOT is to act as applicant on the Contractor's behalf, the Engineer will coordinate the required submittals with the NRU.

All material and equipment shall be stored in accordance with the SWPPP and the Soil Management Plan (SMP).

20. USE OF EXPLOSIVES

The use of explosive is not allowed on this project

36. TRANSPORTATION MANAGEMENT PLAN

The Transportation Management Plan (TMP) for this project is included as an Appendix "D" to these Contract Specific General Provisions. The TMP lays out the set of coordinated transportation management strategies that will be used to manage the work zone safety and mobility impacts of this project. In the event of a discrepancy between information in the TMP and information elsewhere in the Contract Documents, the former shall govern.

The Contractor's attention is called to the applicable sections of the Compilation of Approved Specifications, Supplement No. 8 for SECTION 100 - AWARD AND EXECUTION OF THE CONTRACT, which describes the requirements for the Contractor's designation of a TMP Implementation Manager for the Contract, and also which describes the requirements for the training of all Contractor and Subcontractor personnel involved in work zone design, implementation, operation, inspection, management, and/or enforcement.

The Department's latest Training Guidelines for Personnel Responsible for Work Zone Safety & Mobility are available under the "Training" section at: http://www.dot.ri.gov/humanresources/index.asp.

37. CLEANING AND SWEEPING PAVEMENT

Cleaning and sweeping public roadway pavement surfaces shall be performed once a week as needed, and/or as directed by the Engineer, all as set forth in the Special Provisions for Item Code 931.99. All costs associated with this street sweeping shall be considered incidental to the contract. **Failure to comply will result in a fine of $500 per day**.

APPENDIX E
PAVEMENT CORES

STATE OF RHODE ISLAND AND PROVIDENCE PLANTATIONS
INTER - OFFICE MEMORANDUM

TO: Mr. Vincent J. Palumbo, P. E.
Chief Civil Engineer – Highway Engineering
DEPT: Transportation Development / Design

DATE: October 27, 2004

FROM: Mr. Jan J. Bak
Senior Civil Engineer - Materials
DEPT: Transportation Development / Construction Management

SUBJECT: Gainer / Kent Dam (Route 12) - Scituate
R. I. Contract No. 2000-EH-003
F. A. P. No. STP-DESN (001)
Preliminary Engineering Core Information

ATTN: Mr. J. Baker

Attached are the preliminary engineering pavement cores that were requested for the above referenced project.

Based upon the samples taken, subsequent gradation testing and analysis of available data, we have determined that 87% of the subbase in the specified area conforms to the gravel borrow specifications.

Jan J. Bak
Jan J. Bak
Senior Civil Engineer
Materials

Reviewed:
for Mark E. Felag, P.E.
Chief Civil Engineer
Materials

Attachment: Core Log and Subbase Information

Cc w/o: Mr. Smith
Cc w/: Mr. Fondi
Mr. Bak
File

ADDENDUM NO. 1

ADDENDUM NO. 1

Rhode Island Department of Transportation
Operations - Materials Section

Contract Number 2000-EH-003 **Project** Kent / Gainer Dam (Route 12)

FAP STP-DESN(001) **Cored By** RIDOT / Materials Coring Crew **Date:** 9/11/2004

City/Town Scituate **Limits** Old Scituate Ave. to Howard Ave.

Comments All cores comprised of Class I-1 ashalt over penetrated macadam over a loose stone base.

LOCATION					SURFACE	BINDER	BASE	GRAVEL		
Number Description	Station	OffSet		Depth Description	Depth Description	Depth Description	Depth Description	TOTAL DEPTH	FROM	TO
1 wb	0.1 mi	5'	Rt Curb		2.00 " Class I-1	3.50 " penetrated macad	2.50 " Loose Stone	8.00 "	8 "	20 "
2 wb	0.3 mi	5'	Rt Curb		2.00 "	3.25 "	1.75 " Loose Stone	7.00 "	7 "	19 "
3 wb	0.5 mi	6'	Rt Curb		2.50 "	3.00 "	2.00 " Loose Stone	7.50 "	7.5 "	19.5 "
4 wb	0.7 mi	5'	Rt Curb		2.00 "	4.50 "	1.50 " Loose Stone	8.00 "	8 "	20 "
5 eb	0.0 mi	6'	Rt Curb		1.50 "	3.00 "	3.50 " Loose Stone	8.00 "	8 "	20 "
6 eb	0.2 mi	6'	Rt Curb		1.50 "	3.00 "	2.50 " Loose Stone	7.00 "	7 "	19 "
7 eb	0.4 mi	6'	Rt Curb		1.00 "	3.00 "	3.00 " Loose Stone	7.00 "	7 "	19 "
8 eb	0.6 mi	6'	Rt Curb		2.00 "	3.75 "	4.00 " Loose Stone	9.75 "	9.75 "	21.75 "
					1.8	3.[illegible]	2.[illegible]	7.3		

☒ P.E. ☐ Final ☐ Special Projects

10/27/04

MATERIALS ENGINEER / DATE

Rhode Island Department of Transportation
Operations - Materials Section

Project Number: 2000-EH-003 **Date Tested:** 09/15/2004

FAP: STP-DESN(001) **Date Sampled:** 09/11/2004

Cored By: **Location:** Kent / Gainer Dam (Route 12)

Comments: All cores comprised of Class I-1 ashalt over penetrated macadam over a loose stone base.

SAMPLE NO.	PERCENT PASSING SIEVE						Soil Class	Remarks
	1/2 "	3/8 "	# 4	# 10	# 40	# 200		
SPECIFICATION	50/85	45/80	40/75	———	0/45	0/10		
1	76.3%	70.9%	59.3%	48.4%	33.9%	10.3%	A-1-b	Doesn't Conform
2	78.3%	73.7%	64.1%	52.0%	25.7%	5.0%	A-1-b	Conforms
3	73.0%	68.6%	58.8%	48.6%	26.9%	7.0%	A-1-a	Conforms
4	68.8%	63.9%	52.0%	39.0%	24.3%	6.4%	A-1-a	Conforms
5	75.4%	70.0%	56.6%	41.9%	18.6%	3.5%	A-1-a	Conforms
6	79.5%	74.2%	62.3%	52.2%	31.2%	6.0%	A-1-b	Conforms
7	61.3%	57.8%	50.1%	41.9%	25.3%	4.9%	A-1-a	Conforms
8	64.0%	60.0%	50.4%	42.2%	25.1%	6.1%	A-1-a	Conforms

Dave Cook 10-27-04
TECHNICIAN / DATE

Robert Fisher 10-27-04
TECHNICIAN / DATE

10/27/04
MATERIALS ENGINEER / DATE

ADDENDUM NO. 1

SPECIFICATIONS – JOB SPECIFIC

INDEX

CODE	Title	Page
Part 100	General Requirements and Covenants	JS-1
12.102.05	Preparation of Proposal	JS-4
12.104.16	Value Engineering	JS-5
12.105.02	Plans and Shop Drawings	JS-7
12.108.03	Prosecution and Progress	JS-9
12.108.07	Prosecution and Progress	JS-10
12.108.1000	Prosecution and Progress	JS-11
12.109.07	Partial Payment of Lump Sum Items	JS-12
201.9901	Remove and Dispose Dry Rubble Curb	JS-13
201.9902	Remove and Stockpile Shock Absorbing Barrier Modules Left In Place	JS-14
201.9903	Remove and Stockpile Drum Barricade Std. 26.2.0 With Flashing Warning Lights Modules Left In Place	JS-14
201.9904	Remove and Stockpile Precast Concrete Median Barrier for Temp. Traffic Control Std. 40.5.0 Left In Place	JS-14
201.9905	Remove and Stockpile Protective Chain Link Fence 6 Feet High	JS-14
201.9906	Remove and Stockpile Existing Guardrail Reflective Panels	JS-14
201.9907	Remove and Stockpile Temp. Construction Signs Left In Place and Warning Signs	JS-14
201.9908	Remove and Stockpile Guardrail Connection To Barrier-Approach Section-Std. 34.3.7	JS-14
201.9909	Remove and Stockpile Guardrail Connection To Barrier-Trailing End Section-Std. 34.3.8	JS-14

201.9910	Remove and Dispose Flexible Pavement and Base	JS-18
201.9911	Old Scituate Avenue Pavement Removal	JS-19
203.9901	Geofoam Lightweight Fill (EPS)	JS-21
212	Maintenance and Cleaning of Erosion and Pollution Controls	JS-29
401.9901	Modified Class 9.5 HMA	JS-34
401.9902	Modified Class 12.5 HMA	JS-37
401.9903	Class 19.0 with Pay Adjustments	JS-40
601	Portland Cement Concrete	JS-47
601.99	Integrally Colored Concrete	JS-66
702.9902	Replace Gainer Dam Drainage Structure Cement Concrete Covers	JS-68
803.9901	Remove and Dispose Portions of Existing Concrete Superstructure	JS-69
803.9902	Remove and Dispose Portions of Existing Concrete Substructure	JS-69
803.9903	Temporary Protective Shielding	JS-73
803.9905	Floating Oil Containment Boom	JS-76
803.9906	Remove & Replace Existing Concrete Stairs in Kind	JS-78
810	Reinforcing Steel	JS-80
810.99	Mechanical Connectors	JS-81
824.9901	Steel Door, Frame & Hardware	JS-83
903.9901	6’ Chain Link Fence Reset from Stockpile	JS-85
903.9902	Temporary Chain Link Fence, 6 FT. High	JS-85a

903.9903	Temporary Chain Link Fence Gate, 6 FT. High, 20 FT. Wide	JS-85a
907.1000	Dust Control	JS-86
912.9901	Rebuild Stone Walls in Historic, Scenic Or Rural Areas	JS-87
926.9901	3M Scotchlite Linear Delineation System (LDS) Panels	JS-89
932.9901	Full Depth Sawcut of Bituminous Pavement and Base	JS-92
937.0200	Maintenance and Movement of Traffic Protection	JS-93
938.1000	Price Adjustments	JS-94
L.02	Seeding	JS-95
L.02.1000	Seeding	JS-96
T20.9901	Two-Way Reflectorized Pavement Markers (Slotted in Pavement) Yellow	JS-97

This Page Intentionally Left Blank

This Page Intentionally Left Blank

CODE 201.9911
OLD SCITUATE AVENUE PAVEMENT REMOVAL

DESCRIPTION: This work shall consist of removing and disposing 45,621 square feet of bituminous pavement and base, including both bituminous and/or macadam base materials from an abandoned section of Old Scituate Avenue between Route 116 and Route 12 (Scituate Avenue) in the Town of Scituate as indicated on the Plans and as directed by the Engineer.

MATERIALS: Not Applicable.

CONSTRUCTION METHODS:

1. At the start of work, the Contractor shall move the concrete barricades at the intersections of Old Scituate Avenue with Route 12 and Route 116 to a safe location as necessary to access the site and complete the work. The concrete barricades adjacent to Route 116 shall be moved back near the original locations at the end of each workday. These concrete barricades shall be placed beyond the roadside clear zone and more than 20 feet from the near edge of the travel lane. The concrete barricades adjacent to Route 12 shall be removed and legally disposed.

2. Prior to the commencement of work, the Contractor shall stake out or otherwise mark, for the Engineer's approval, the limits of pavement removal on Old Scituate Avenue.

3. Prior to Old Scituate Avenue pavement removal, the Contractor shall clear vegetation and debris as necessary to install RI Standard 9.1.0 Baled Hay Erosion Check and shall install the Baled Hay Erosion Check as shown on the Plans and as directed by the Engineer.

4. Where downed trees block access to the Old Scituate Avenue pavement removal area, the Contractor shall cut said trees and dispose of portions of said trees as necessary to access the work area.

5. The Contractor shall remove and legally dispose flexible pavement and base. The anticipated depth of removal is approximately 7 inches.

6. Old Scituate Avenue pavement removal shall include the removal and disposal of vegetation and debris that has accumulated within the pavement removal area.

7. The Contractor shall not remove pavement beyond the limits indicated on the plans or beyond those limits as directed by the Engineer. There will be no adjustments made to the total Old Scituate Avenue pavement removal area of 45,621 square feet.

8. Sawcutting of pavement will not be required between pavement that is to be removed from and pavement that is to remain on Old Scituate Avenue. Saw- cutting of pavement will be required at the intersection of Old Scituate Avenue and Route 116 and, as shown on the plans, at the intersection of Old Scituate Avenue and Route 12.

9. Following Old Scituate Avenue pavement removal, common borrow, plantable soil, and seeding will be installed as detailed in the plan set and as directed by the Engineer.

METHOD OF MEASUREMENT: This item will not be measured for payment.

BASIS OF PAYMENT: "Old Scituate Avenue Pavement Removal" will be paid for at the Contract "Lump Sum" price as listed in the Proposal. The price so-stated constitutes full and complete compensation for all labor, materials, tools, equipment, and all other incidentals required to complete the work as described in these Special Provisions and elsewhere in the Contract Documents, complete in place and accepted by the Engineer.

The following work will be paid for separately under appropriate work items: Saw- cutting of existing pavements (where required), baled hay erosion checks, removal of baled hay erosion checks, common borrow, plantable soil 4 inches deep, general highway seeding, trimming and fine grading, and water for dust control.

There will be no additional payment for pavement removal from Old Scituate Avenue exceeding the 45,621 square feet specified.

This Page Intentionally Left Blank

This Page Intentionally Left Blank

This Page Intentionally Left Blank

This Page Intentionally Left Blank

SECTION 607

MASS CONCRETE

607.01 DESCRIPTION. This specification covers the requirements for concrete used in mass concrete elements. Concrete proportioned for mass concrete applications shall conform to the applicable requirements of PARTS 600 and 800 of these specifications, together with the additional provisions set forth below.

607.01.1 DEFINITIONS. Mass Concrete is defined as any elements so specified on the Plans and any other concrete pour where the ratio of the total volume to the surface area of the element equals or exceeds 0.6 and has a minimum dimension of 3 feet in any of the three planes. Calculation of the ratio shall be performed based on all dimensions measured in feet.

Requirements for mass concrete construction include laboratory testing, thermal modeling, temperature monitoring, and providing concrete temperature control before, during, and after placement. All testing shall be performed at a laboratory with recognized accreditations for performing the necessary tests, with the provision that no exception is taken by the Engineer with the Contractor's choice of laboratory.

The peak temperature is defined as the average of the values measured at any given time by the two temperature sensors placed at the location of the highest temperature as determined by the thermal model for the structural element. The highest acceptable peak temperature is 155 degrees F.

The differential temperature is defined as the value measured at any given time by the temperature sensor in any given location (or the average, if two sensors placed in the location) in the structural element and the peak temperature as defined above. The highest acceptable differential temperature until the completion of temperature control is 35 degrees F.

The performance-based differential temperature is defined as a limit that changes as the concrete gains strength, determined as a function of the established maturity curve for the mix. The benefit of this method is a potential acceleration of the production schedule over the use of a fixed limit. This option may be considered by the Engineer, with the proper submission of an implementation plan for the process as described herein, after the contractor has demonstrated good control of the concrete mix during batching, placement and curing.

607.02 MATERIALS AND EQUIPMENT.

607.02.1. CONCRETE. The applicable material requirements of Section 808 and Section 601. Unless specified in the contract documents, calcium nitrite based corrosion inhibitor shall not be allowed in Mass Concrete mixtures. Any proposed mixture

adjustment that meets the requirement in Section 601 for a new approval of the mix design will also require a new approval of the mass concrete temperature control plans per this specification.

607.02.2 TEMPERATURE AND MATURITY RECORDING. Primary temperature measuring loggers shall be designed specifically for determining the maturity of concrete in accordance with ASTM C1074. They shall operate in the range of 0 degrees F to 212 degrees F to an accuracy of +/- 1 degree F and internally record the time and temperature at a minimum of 1 hour intervals for a minimum of 90 days. Each logger shall have a unique serial number and shall upon download of the information using the compatible reader or other appropriate data connection, produce a secure (unalterable) Windows PC-readable file that identifies the logger by its serial number and the start date. Software shall be provided to develop maturity curves to predict strength and display the temperature versus time data for any or all of the loggers in a given placement.

The data leads shall be sized to reach from the logger's installed location to an accessible site where a handheld reader can be employed. A data cable that can connect the loggers to a notebook computer or other standard mobile device will be considered equivalent to a handheld reader, providing a Windows PC-readable file can be created that can be transferred to a Windows PC. The Contractor shall provide a reader and any necessary software for the exclusive use of the Engineer. The reader and software provided for the Engineer shall become the property of the State at the completion of the project.

The loggers selected by the Contractor shall have the capability to use battery operated Wireless Remote Boxes for the downloading of data. The transmission range of the system shall be sufficient to provide a reliable connection to both the Contractor’s and Engineer’s field offices. A Windows PC-Compatible Wireless System Radio Base Station shall be provided and capable of downloading the data file as described above. The Wireless System Radio Base Station shall be maintained by the Contractor for monitoring the mass concrete placement. An additional Wireless System Radio Base Station shall also be provided for the Engineer’s field office. The additional device and any associated software provided for the Engineer shall become the property of the State at the completion of the project.

The requirement for a wireless communications system may be waived by the Engineer, if the Engineer determines that access to the placement does not warrant it.

The Contractor shall provide the Engineer recording equipment that will allow intermediate downloading of measurements to a computer without restarting the logger. The recording equipment provided for the Engineer shall become the property of the State at the completion of the project. An automatic temperature monitoring system shall be provided with email, phone, or text message alarm capability to notify the Contractor when temperature control limits are about to be exceeded.

The Contractor must submit technical literature on the complete maturity logger system, including the loggers, handheld reader, wireless system, software and any other components to the Engineer for approval at least 60 days prior to the first mass concrete placement. This shall include manufacturer contact information for the responsible technical representative and product performance history showing at least one year of successful use of the complete system on a minimum of three projects with mass concrete placements comparable to those within the scope of this project. Contact information shall be provided for the project owners. No mass concrete placements shall proceed until approval of the maturity logger system has been given in writing by the Engineer.

607.03 SUBMITTALS.

607.03.1 Mass Concrete Temperature Control Plans. As part of the submittals, the Contractor shall submit a “Mass Concrete General Temperature Control Plan" for approval at least 60 days prior to the first mass concrete placement and shall be stamped by a Rhode Island Registered Professional Engineer. This shall show the general procedures proposed for temperature control. A "Mass Concrete Specific Temperature Control Plan" shall be prepared for each unique placement and shall be based on the general plan. Each specific temperature control plan shall provide guidance for the Contractor, developed based on a concrete hydration temperature model, to indicate when the peak and differential temperatures might exceed the specification limits. The guidance shall provide specific concrete placement temperature restrictions based on anticipated ambient temperatures and other environmental factors, passive and active cooling, and insulation practices that could produce peak or differential temperatures that require remedial action. Guidance shall also be provided on appropriate remedial actions to be taken when concrete temperatures approach specification limits. At a minimum, these guidelines shall take effect when the concrete peak temperature reaches 3°F below the specification limit of 155°F and when the differential temperature reaches 2°F below the specification limit of 35°F or the temperature value at the specified maturity, for the variable differential limit, (if approved). Each specific plan shall be submitted for approval at least 30 days prior to the placement and shall be stamped by a Rhode Island Registered Professional Engineer. Any costs related to the development of Mass Concrete Temperature Control Plans shall be considered incidental to the project.

Approval of any Mass Concrete Temperature Control Plan by the Engineer will not relieve the Contractor of his responsibility to maintain concrete temperatures within specification limits.

A. General Mass Concrete Temperature Control Plan. The General Mass Concrete Temperature Control Plan shall include the following:

1. Concrete mixture proportions, indicating aggregate sources and physical

properties, cementitious material sources, and admixture product names and doses for each concrete mixture. The Class MC concrete mixture design and prequalification test results shall be submitted for approval separately.

2. Anticipated mass concrete placement schedule, including proposed concrete mixture adjustments for the full range of conditions that may occur during placement and curing operations.

3. Concrete temperature rise for each mixture shall be tested directly in an adiabatic concrete calorimeter cast from laboratory trial batches using the same material sources and proportions as intended for use on the project.

4. Concrete compressive strength development in standard moist curing environment (73.5 ± 3.5 deg F) at 3, 7, 14, 28, and 56 days for each mixture, based on the average of three 6” x 12” cylinders for each age. Cylinders shall be cured and tested per AASHTO T-22. Cast a temperature sensor in the center of two additional cylinders and cure these cylinders alongside those used for compressive strength. Record the average temperatures of the cylinders hourly. Report the compressive strength and maturity for each specimen at each test age and the average values.

5. Calculate and report the concrete strength development-maturity equation for each mixture from the standard cured strength results as described in ASTM C 1074 "Estimating Concrete Strength by the Maturity Method".

6. Demonstration Mock-up(s) shall be performed at least 120 days prior to the first scheduled Mass Concrete Placement. The Contractor shall cast at least one mock-up to verify that the concrete thermal properties and temperature control procedures required for the Mass Concrete General Temperature Control Plan are adequate to meet the specification limits. The mock-up(s) shall use the same concrete mixture proportions and materials, form materials, curing materials, and monitoring devices defined in the General Temperature Control Plan, and shall use the same batching and placing operation as intended for the project. The mock-up shall be a cube or other element measuring 4 ft or more in the least dimension. Temperature monitoring of the mock-up shall be as specified in the General Mass Concrete Temperature Control Plan and shall continue for at least seven (7) days. As a minimum, the demonstration mock-up shall be insulated with R-20 insulation on all sides. If various insulation, cooling, or curing options are proposed, a separate demonstration mock-up cube shall be cast and instrumented for each option. The engineer responsible for the design of the temperature control plan shall be present at the placement for each mock-up.

   Sensor placement:

   a. Two sensors shall be located At the center of the mock-up. The average

of these two shall be used.

b. Two sensors shall be located within one inch from the top surface located directly above the center of mass sensors. The average of these two shall be used.

c. Two sensors shall be located within one inch from the center of a vertical face. The average of these two shall be used.

d. Two sensors shall be located in an upper corner of the cube. The average of these two shall be used.

e. One sensor shall be used to record the ambient temperature. This sensor shall be placed at approximately ten (10) feet from the placement, in a shaded area.

Note: A 5°F or greater variation between adjacent sensors pairs, or erratic variations or outright failure of a sensor shall be brought to the attention of the Engineer immediately upon discovery of the problem. At the time of the notification, the Contactor shall provide the Engineer with a course of corrective action for approval. If the approved corrective action requires that the data from one sensor in a pair no longer be used, the other functioning sensor shall be used solely for the peak and maximum differential temperature measurements.

From the concrete batched for the mock-up, the Contractor shall have tests conducted for air content (AASHTO T152), placement temperature (ASTM C1064, unit weight (AASHTO T121) and fabricate cylinders (per AASHTO T23) from the same concrete by an ACI Certified Concrete Field Technician Level I. The cylinders shall be tested for compression strength by an AASHTO Accredited independent concrete testing laboratory (AASHTO T22) at 3,7, 14, 28, and 56 days. The Contractor shall coordinate the mock-up with the Engineer, and shall provide the State at least one week advance notice of the casting date. The Engineer shall be provided the opportunity to witness the placement and functioning of temperature recording sensors prior to casting, and may perform concrete property tests on companion samples selected by the Engineer.

If a mix design has been approved for mass concrete placement prior to the scheduled first placement for this project and the test conforms to these standards, the Engineer may waive the requirement of items 607.03.1 (A)(1) through 607.03.1 (A)(1)(6). However, any requirements for testing/analysis added after the aforementioned mix design was approved shall still be performed, with the exception that mix designs previously approved using data derived from semi-adiabatic testing will not require re-testing per the above requirements. If the approved mix design has already had a mock-up performed previously and the criteria matches that for the applicable temperature control plan, the Engineer may accept the results of the previous mock-up instead of running a new one.

A letter report documenting the concrete properties and temperatures developed in the mock-up compared against the thermal analysis contained in the General Mass Concrete General Temperature Control Plan models shall be submitted as part of the General Temperature Control Plan. Any revisions/corrections required to the General Mass Concrete Temperature Control Plan for differing ambient conditions shall be outlined in the letter report. Strength results may be submitted separately.

If the project involves four or less unique mass concrete placement designs, the Engineer may waive the requirement for a General Mass Concrete Temperature Control Plan. If waived, the Specific Mass Concrete Temperature Control Plans shall meet all of the requirements listed above.

B. Specific Mass Concrete Temperature Control Plans. Each Specific Concrete Temperature Control Plan shall include the following:

1. Form and form liner R-value and anticipated time of form removal.

2. Insulating material(s) R-value and anticipated periods of use

3. Curing procedure and duration

4. Thermal modeling analysis for typical placement scenarios shall be provided. The analysis shall incorporate, but not be limited to: A range of anticipated ambient placement temperatures, anticipated water temperatures for active cooling, effects of water temperature for placements in water, effects of convection cooling in locations where high winds may be a factor, anticipated concrete placement temperatures, assumed R-values for concrete forms and insulation, and shall calculate maximum core and surface temperatures vs. time after placement. The impact of planned construction activities, such as form removal, shall be included in the analysis. Concrete strength at form removal shall be estimated from the maturity relationship using the lowest calculated maturity value shown by the sensors placed within the concrete.

5. Drawings identifying temperature monitoring locations for each placement, and product data for all sensors and recording instrumentation shall be provided. With the exception of the ambient sensor, the sensors shall be installed in pairs for the redundancy. The minimum number of automated temperature monitoring locations shall be nine (9) per element for placements less than 500 yd^3, and seventeen (17) for placements 500 yd^3 or larger. Minimum sensor locations are noted below. Each of the sensors in a pair shall be placed in separate locations, no less than 6” and no more than 18” apart: The relative locations shall be as shown for the mock-ups.

    a. Two sensors shall be placed in the geometric center of the placement.

This location shall be based on the isocurves developed for the model, with the approval of the Engineer. The average of the two will be used to determine the peak temperature at any given time and to measure the maximum temperature differential in the placement based on the difference between the peak temperature and each sensor location at any given time. The average of the two sensors shall be used.

b. Two sensors shall be placed at the location as determined by isocurves developed for the model that shows the point where the lowest temperature is predicted during temperature control. The average of the two sensors shall be used.

c. Two sensors shall be located within one inch from the top surface located directly above the center of mass sensors. This location may be adjusted, based on the isocurves developed for the model, with the approval of the Engineer. The average of the two sensors shall be used.

d. Two sensors shall be located within one inch from the center of vertical formed surfaces at mid-height. This location may be adjusted, based on the isocurves developed for the model, with the approval of the Engineer. The average of the two sensors shall be used.

e. One sensor shall be used to record the ambient temperature. This sensor shall be placed at approximately ten (10) feet from the placement, in a shaded area.

f. The Contractor shall also provide up to four (4) additional sensor pairs to be located at the discretion of the Engineer.

g. Use similar sensor distribution for placements greater than 500 yd^3.

Note: A 5°F or greater variation between adjacent sensors pairs, or erratic variations or outright failure of a sensor shall be brought to the attention of the Engineer immediately upon discovery of the problem. At the time of the notification, the Contactor shall provide the Engineer with a course of corrective action for approval. If the approved corrective action requires that the data from one sensor in a pair no longer be used, the other functioning sensor shall be used solely for the peak and maximum differential temperature measurements.

Following a mass concrete pour, the Engineer may require the Contractor to perform thermal modeling analysis of the placement using actual concrete and ambient temperatures to evaluate the effects of construction practices such as, but not limited to, form removal or curing. If required, this shall be performed at no additional cost to the State.

Procedures for achieving temperature restrictions including contingencies for severe weather events shall be provided. Procedures may incorporate either active (cooling pipes) or passive control methods (insulation, tenting, venting, etc.) or both. The Temperature Control Plan shall show the expected duration of all temperature control measures for each model condition model provided.

If cooling pipes are proposed, submit detailed description of the system describing the layout and size of pipes, anticipated coolant flow rate, temperature of the raw coolant source, pump size, flow and recirculation control equipment, instrumentation, coolant temperature control procedure, and contingency plans.

607.03.2 Performance-Based Variable Temperature Differential Limit. After the Contractor has established, to the satisfaction of the Engineer, that proper control can be maintained of the concrete mix properties, including curing temperatures, the Contractor shall have the option of submitting a plan to use a performance-based criteria for a variable differential limit, based on the concrete strength as determined by the maturity at any given time. This will supersede the 35 degree F limit. Failure to maintain proper temperature control under this plan will result in reversion to the 35 degree F limit for subsequent placements until such time that the Contractor demonstrates to the Engineer that causes for the loss of control have been identified and corrected. Temperature control will be considered to have failed if one of the following conditions occurs:

- The differential exceeds the variable value by more than 3 degrees F at any time during the first 40 hours after placement.
- The differential exceeds the variable value by more than 5 degrees F at any time after the first 40 hours after placement during temperature control.
- The differential exceeds the variable value by 2 degrees F or more for any period of 8 hours or more at any time during temperature control.
- Cracking of the placement determined to be the result of thermal issues will also be considered to be failure of the temperature control and will result in reversion to the 35 degree F limit, as well as triggering the provisions specified in 607.05.4.

Plan Submission Requirements. The Contractor's written implementation plan shall include complete back-up data such as, but not limited to, listing of all assumptions used in the analysis, published reference documents, coefficient of the thermal expansion for the mix being placed, tensile strength development versus maturity equations for the mix being placed, elastic modulus versus maturity equations for the mix being placed, example implementation of the method using a predicted thermal gradient analysis and complete test data justifying the prediction equations for the proposed mixture. Each placement shall also include a specific plan with an assumed restraint factor, consideration of the placement geometry and other factors that can affect the differential limit. The other factors shall include, but not be limited to, anticipated concrete placement temperature, ambient temperatures, cooling water temperature (if active cooling is used), convection effects from wind and design elements of the temperature

control plan.

For acceptable demonstration of the submission of an implementation plan, the Contractor may use a mass concrete pour defined and conducted using the 35 degree F differential limit. The gradients predicted in the thermal model for the performance-based temperature limit shall match the actual temperatures to the satisfaction of the Engineer. It shall have as a minimum a set of at least eleven temperature/maturity sensors. Locate sensors as follows:

1. At the location of the maximum temperature, at least one sensor shall be placed as defined in 607.03.1 (B) (1) (a)
2. Near the formed surface, at least one sensor shall be placed as defined in 607.03.1 (B) (1) (b)
3. Near the top surface\, at least one sensor shall be placed as defined in 607.03.1 (B) (1) (c)
4. A minimum of two equally spaced between the location of the maximum temperature and top surface sensor in an approximate straight line configuration
5. A minimum of two equally spaced between the location of the maximum temperature and formed surface sensor in an approximate straight line configuration
6. At the location of the minimum temperature, at least one sensor shall be placed as defined in 607.03.1 (B) (1) (d)
7. A minimum of two equally spaced between the location of the maximum temperature and the location of the minimum temperature, in an approximate straight line configuration
8. One sensor should be used to record the ambient temperature remote from the placement , as defined in 607.03.1 (B) (1) (e)

For items 1, 2, 3 and 6, the sensors may be the same as those used for the actual temperature control of the placement as specified in 607.03.1B. While redundant sensors are not required, failure at any of the required locations without a backup will invalidate the results.

The performance-based temperature limit plan shall be submitted for approval at least 30 days prior to the first placement for which it is proposed to be used and shall be stamped by a Rhode Island Registered Professional Engineer. Should the plan be approved by the Engineer, this will become the standard sensor distribution for as long as this plan is in effect and shall be used to verify the accuracy of the performance-based temperature limit plan thermal model for each placement. The plan shall show a relationship between the maturity and the appropriate maximum acceptable temperature differential that will prevent cracking of the concrete. The relationship shall be shown in tabular form, at intervals of one (1) degree F for the first forty (40) hours after placement and two (2) degrees F for more than forty (40) hours after placement. to a minimum of fourteen (14) days. The maturity value used to determine the appropriate differential at any given time shall be the lowest measured within the placement.

607.04 CONSTRUCTION METHODS. Applicable construction requirements for SECTION 808 CAST-IN-PLACE STRUCTURE CONCRETE MASONRY and SECTION 601 PORTLAND CEMENT CONCRETE shall apply, with the following additions:

607.05 TEMPERATURE CONTROL REQUIREMENTS.

607.05.1 Temperature Control. Mass concrete temperature control shall be monitored by maturity loggers cast into the concrete, as described in 607.03.1. Use of low heat concrete mixtures, pre-cooling of the concrete, insulated curing blankets, insulated forms, cooling pipes, and other measures may be necessary to satisfy the temperature control requirements.

The Contractor shall notify the Engineer immediately when temperature control limits are exceeded.

Complete concrete temperature records for each placement including the secure files generated by the automated temperature sensors shall be provided to the Engineer. The Engineer shall be provided unobstructed access to temperature sensors at any time to verify compliance with temperature control criteria.

a. When forms are placed in water, the forms and insulation shall be waterproof or otherwise protected against water absorption. The required combined form and insulation R-Value shall be determined through thermal analysis prior to placement using forecasted temperatures to meet the requirements to maintain the maximum peak and differential temperatures within the limits defined in tis specification.

b. The temperature of the concrete at placement must not exceed 65 degrees for cold weather placements, nor 85 degrees F for hot weather placements, unless active temperature control precautions are employed. All active temperature control piping shall be non-metallic and shall be filled with a non-shrink grout on the RIDOT Approved Products List upon completion of cooling operations. The temperature of the concrete at placement shall be within the acceptable range of values shown in the temperature control plan for the structural element.

c. Temperature sensors shall be maturity loggers as described in 607.02.2. The logger will be programmed with the appropriate datum temperature. .

d. Wiring for loggers that must be cast into the concrete shall be secured to reinforcing or otherwise protected to prevent damage during concrete placement. The method of protection of the wires cast into the concrete shall be approved by the Engineer and shall use methods satisfactory to the Engineer. Wiring for loggers shall be clearly labeled to identify the location within the form at both ends before being placed into the form. Ambient temperature sensors shall be located

no closer than 10 feet from the Mass Concrete Placement and shall be placed as to provide an accurate measurement of the environmental condition. Wire runs outside of concrete shall be encased in conduit where necessary to prevent damage during subsequent construction operations.

e. The Contractor shall not perform installation and verification checks for operation of any loggers unless the Engineer is present. The Contractor shall provide as-built versions of the temperature control plans showing the location of the loggers as identified by the unique serial numbers. Upon completion of monitoring all visible wires shall be removed from the concrete and any conduit penetrations filled with a non-shrink grout on the RIDOT Approved Product List.

f. Each logger will be programmed with notes identifying the placement and relative location within the placement. Loggers shall be secured into position and function shall be verified at least one day prior to concrete placement. Temperature recording for each placement shall start no less than 2 hours prior to the initial concrete placement. The Contractor shall provide the Engineer safe access to the locations where readings will be taken, to observe the initialization of the loggers and record relevant information. This information shall include each logger serial number, location in the placement and start time. Access shall also be provided as needed for subsequent readings, as required by the Engineer.

g. Each logger for each placement shall be connected to the Wireless Remote Boxes purchased by the Contractor. The Contractor shall provide as many Wireless Remote Boxes as necessary to monitor all loggers simultaneously. The Contractor shall be aware that a sufficient quantity of Wireless Remote Boxes must be on hand to monitor all of the loggers for all of the placements being actively monitored at any given time during the project. The Contractor shall also maintain two (2) spare Remote Boxes or 10% of the total on hand, whichever is larger, in operating condition at all times.

h. The Contractor shall maintain the wireless system in operating condition, including maintaining any batteries at sufficient charge and protecting the units from damage due to the environment and other factors. This shall be done to insure that the Remote Boxes are capable of retrieving and transmitting data on a daily basis for the duration of the specified monitoring period for the concrete placement.

i. The Contractor shall have at the Contractor's field office a Wireless System Radio Base Station compatible with the Wireless Remote Boxes and an equivalent model provided to the Engineer, as described in 607.02.2. Both Wireless System Radio Base Stations shall be configured to access all of the active Wireless Remote Boxes at any given time without reconfiguration of any component. Upon setup of each Wireless Remote Box and prior to placement of the concrete, the Contractor shall test the remote operation of the system to verify that it works

properly and that all loggers that are to be connected to the Wireless Remote Box can be accessed. The Contractor may, at his discretion, have a handheld reader for the loggers. However, this shall not be used, except to configure the loggers initially or to collect data in the event of a problem with a Wireless Remote Box. Any such problem shall be corrected within 24 hours, unless permission is granted by the Engineer for a longer delay. Upon connection/reconnection of a Wireless Remote Box, the operation shall be tested as described above.

j. Automated temperature measurements shall be downloaded within one hour of the start of each calendar day during which any element of temperature control is in place. Secure data files from each logger shall be provided to the Engineer on a daily basis.

k. The peak concrete temperature at any location within the mass shall not exceed 155 degrees F at any point in time. Failure to maintain a maximum peak concrete temperature less than or equal to 155 degrees will be cause for rejection of the concrete placement by the Engineer.

l. The temperature differential calculated as the difference between the mean of the peak temperature and any concrete surface sensor temperature shall not exceed 35 degrees F or the value of the variable limit (if approved) at any point in time. Failure to control the maximum concrete temperature differential less than or equal to the specified limit may be cause for rejection of the concrete placement by the Engineer. Malfunctioning sensors, as determined by the Engineer, shall be excluded from the differential calculation.

m. The placement shall be completely protected from exposure to precipitation to prevent cooling of the surface. Such protection shall be maintained until temperature control is no longer required.

n. Forms shall remain in place until the estimated strength of the concrete surface exceeds 2500 psi based on the lowest indicated maturity from the data loggers and until the differential between the mean center temperature and ambient temperature is less than 30 degrees F and decreasing. Ambient temperatures must be rising at the time of form removal. Forms shall not be removed prior to meeting all other requirements listed elsewhere in the Contract Documents.

o. Tenting, erecting windbreaks, covering with plastic or curing blankets or other means may be necessary to protect the concrete surface from rapid cooling after form removal. Any and all such measures shall be at no additional cost to the State.

p. Concrete surfaces shall be protected when the temperature differential between the peak temperature and ambient temperature is greater than 30 degrees F.

q. Mass concrete temperature control procedures shall remain in effect until the temperature differential between the mean center temperature and the 3-day mean ambient low temperature is less than 35 degrees F.

r. Mass concrete elements exposed to seawater, brackish water or freshwater shall have reached at least 28 days compressive strength as indicated by the approved Maturity Curve and shall have a core temperature-to-water temperature differential less than 35 degrees F prior to exposure.

s. Verbal approval shall be obtained from the Engineer before removing temperature control.

607.05.2 Curing. Curing requirements of SECTION 601.03.8 and SECTION 808.03.09 shall apply, except as follows:

Mass concrete placements shall be continuously moist cured for at least 14 days and until the 28 day compressive strength as indicated by the approved Maturity Curve is achieved. Maintaining moisture on the top surface with forms in place shall be considered adequate moist curing. If strength and thermal control are achieved prior to 14 days, forms may be removed but moist curing must be continued.

Water used for curing shall be fresh water and shall not contain any salts or other components harmful to concrete. The temperature of any water used for moist curing of mass concrete shall be controlled to within 30 degrees F of the mean concrete center temperature.

607.05.3 Temperature Control Failure. Failure to meet the temperature control requirements of this specification will be cause for rejection of the concrete. Subsequent mass concrete placements shall be immediately halted. The Contractor shall investigate the events that produced the failure, and shall submit a written report to the Engineer. The investigation shall include a thorough examination of the concrete placement, the reasons for non-compliance with these requirements and shall document the width and extent of all visible cracks (if any), after cleaning the surface to fully expose them. Surface crack intensity will be measured after monitoring shows the maximum internal temperature has dropped to within 10°F of the outer concrete temperature The investigation shall be conducted by a licensed Rhode Island Professional Engineer, and shall present crack repair options for approval by the Engineer in accordance with subsection 607.05.05.

The Contractor shall remove all equipment and materials from the mass concrete element and clean the surface for the Engineer to verify the Contractor's measurements of the crack intensity. The Contractor shall provide safe access for the Engineer's inspection, at no additional cost to the State.

At the discretion of the Engineer, repair or removal and replacement of the rejected

placement may be required of the Contractor. If required, repair, or removal and replacement of the rejected placement shall be performed at no additional cost to the State.

At the discretion of the Engineer, the Contractor shall be required to submit a revised Mass Concrete General Temperature Control Plan to address any deficiencies identified by the investigation, at no additional cost to the State.

Subsequent mass concrete placements shall not resume without written approval by the Engineer.

There shall be no claims for additional payment by the Contractor nor will there be an extension of the project Completion Dates for any corrective actions required as a result of the rejected concrete and subsequent corrective measures to address any deficiencies identified by the investigation.

607.05.4 Crack Repairs. Cracking determined to be due to thermal issues shall be repaired by methods submitted to the Engineer. Determination of when cracking is caused by thermal issues will be solely by the Engineer. No repairs shall begin until the Engineer has approved the repair plan.

In case of thermal cracking, the Contractor shall suspend further work on members of similar size and configuration, submit a written explanation of the thermal cracking and additional steps to be taken to eliminate future thermal cracking, and submit proposed modifications in writing to the Engineer for review. Concrete placement may not resume until the Engineer approves the proposed modifications.

607.06 METHOD OF MEASUREMENT. "Mass Concrete" will not be measured for payment.

607.07 BASIS OF PAYMENT. No separate payment will be made for this item. Compliance with the above requirements shall be considered incidental to placement of mass concrete. Costs for this item shall be included in the bid prices of the appropriate items as listed in the Proposal.

CODE 803.9901 REMOVE AND DISPOSE PORTIONS OF EXISTING CONCRETE SUPERSTRUCTURE
CODE 803.9902 REMOVE AND DISPOSE PORTIONS OF EXISTING CONCRETE SUBSTRUCTURE

DESCRIPTION:

The work under these items shall consist of the complete removal, handling, transportation, and legal disposal of portions of the existing Kent Dam Spillway Bridge No. 84, all to the limits indicated on the Contract Drawings and as described below. These Special Provisions shall supplement the requirements of Section 803 of the State of Rhode Island Standard Specifications for Road and Bridge Construction, 2004 Edition (hereinafter referred to as the RI Standard Specifications), including all revisions, and the work shall be performed as detailed on the Contract Documents, except as modified by these Special Provisions.

The plans and details of the portion of existing structures shown on the Demolition Plans are illustrative only, depicting the minimum limits of removal. It is the Contractor's responsibility to visit the site and to review all existing information to assess the existing conditions and the scope of the demolition work required to accommodate the proposed construction, prior to submitting bids. No additional compensation, other than the lump sum price bid for these items, shall be made for additional material, disposal or work required to accommodate the proposed construction whether or not it differs from that inferred or described herein or shown on the plans.

For the purposes of these Special Provisions, the portions of existing superstructures and substructures to be removed and disposed of (to the limits indicated on the Contract Drawings) are in general described as follows:

Superstructures:

- The existing reinforced concrete deck, parapet, sidewalk, curb, spandrel walls, portions of arch rib, portions of cross walls, bituminous pavement and cinder fill, as well as the removal and disposal of the associated reinforcing steel and any other items embedded in or attached to the concrete within the limits indicated on the Contract Drawings.

- The existing timber sidewalk barrier and any other items embedded in or attached to the timber, with exception of the 6'-0" chain link fence, to the limits indicated on the Contract Drawings.

- Remove and dispose all existing sand and debris over the top of the arch rib between cross walls.

Substructures:

- The existing reinforced concrete deck over utility room, coping (upper portion of wall), parapet, sidewalk, curb, and end-posts, as well as the removal and disposal of the associated reinforcing steel and other structural steel components embedded in the concrete within the limits indicated on the Contract Drawings.

The Contractor shall make adequate provisions for the protection of public or private property. As a minimum the Contractor shall install temporary protective shielding. This work shall be in accordance with the special provision "TEMPORARY PROTECTIVE SHIELDING" (included in these JS pages).

MATERIALS:

Not Applicable.

CONSTRUCTION METHODS:

The Contractor shall phase and/or perform this work in accordance with the provisions of the Contract Drawings (including the suggested sequence of Construction) and the restrictions noted in the CS pages. The Contractor shall segment the concrete removal portions of the superstructure and substructure so as to facilitate the removal with as few pieces as possible.

The Contractor shall ensure that the removal and disposal operations do not cause damage to the existing bridge to remain, nor to any existing structures or properties. Any resulting damages shall be repaired to the satisfaction of the Engineer and property owner(s) at the expense of the Contractor. **No blasting or explosive demolition will be allowed.**

Care shall be taken to protect all utilities and adjacent structures. Any damage to existing utilities and adjacent structures shall be repaired by the Contractor at his or her own expense to the satisfaction of the Engineer and the respective Utility Companies. All respective utility companies are to be given a minimum of forty eight (48) hours advanced notice of demolition activities to be performed adjacent to their utilities.

The Contractor is made aware that the paint on the existing utility room steel access door(s) and associated hardware, is lead-based paint and shall be

handled in compliance with the latest rules and regulations, standards, requirements, and procedures of the Occupational Safety and Health Administration; the Rhode Island Department of Health, Rules and Regulations for Lead Poisoning Prevention [R23-24.6-PB]; and the Rhode Island Department of Environmental Management, Air Pollution Control Regulation No. 5, Air Pollution Control Regulation No. 24, and Solid Waste Regulation No.7. The Contractor shall obtain approval of its work plan and required submittals, including but not limited to those required by section 24.4.2 of Air Pollution Control Regulation No. 24, from the Rhode Island Department of Health (RIDOH) and the Rhode Island Department of Environmental Management (RIDEM). The Contractor shall provide documentation of this approval to the Engineer. All containment and disposal operations for paint removal necessary to perform this item of work shall be done in accordance with Section 826.

The Contractor is made aware that, as noted on the original construction drawings, existing bridge expansion joints may have been “coated with a mixture of 1 part cement, 1 part fine sand, and 2 parts asbestos except where otherwise provided”. Construction operations associated with this special provision, in the vicinity of these expansion joints, shall be handled in compliance with the latest rules and regulations, standards, requirements and procedures of the Occupational Safety and Health Administration, the Rhode Island Department of Health Rules and Regulations for Asbestos Control, and the Rhode Island Department of Environmental Management, Air Pollution Control Regulation No. 5.

The Contractor shall ensure that no debris or any other foreign material falls into the waterway below the bridge. Should any debris inadvertently fall into waterway, the debris shall be removed immediately and all work shall stop until such time as a revised procedure of operation has been submitted and approved by the Engineer. Any delay caused as a result of cessation of work shall not relieve the Contractor of any responsibilities under this contract, including the timely completion of work.

Boundaries of concrete areas to remain, where indicated on the Contract Drawings or as directed by the Engineer, shall be saw cut square to a minimum depth of 1 inch (unless otherwise noted). Care shall be taken during the removal of the designated portions of the structure to avoid damaging any portions that are to remain and to assure that, the surface to which new concrete will be cast or mate against will produce a finished joint and surface appearance to match the original construction.

Pneumatic hammers used to remove concrete that is monolithic with concrete to remain in place shall not be heavier than the nominal 15 pound class. Pneumatic

hammers heavier than the 15 pound class will be allowed for the removal of concrete not directly attached to the bridge structure that is to remain.

Regardless of the method of removal, if in the opinion of the Engineer the removal operation may cause excessive damage to portions of the concrete which are to remain, the Contractor shall cease operations until such time that an alternate removal method has been proposed by the Contractor and approved by the Engineer. An Engineer-ordered "cease of operations" to establish an alternate removal method shall not result in claims for additional payment by the Contractor to the State, nor an extension of the project completion date.

Prior to commencement of any demolition activities, the Contractor shall prepare and submit to the Engineer for approval, detailed demolition plans signed and sealed by a Professional Engineer licensed in the State of Rhode Island. Said demolition plans shall include, but not be limited to, plans showing the location of all roadways, waterways, utilities, and other appurtenances in the area of demolition, anticipated pick weights, rigging, crane and equipment types and locations (including operating radii), removal sequence and effects on remaining structural elements, temporary support design, and all else necessary to clearly describe the work to be performed. An approved demolition plan as described above is required prior to commencement of any demolition activities. Approval(s) of demolition plans, procedures, etc. shall in no way relieve the Contractor of sole liability for damages resulting from the removal and disposal operations.

METHOD OF MEASUREMENT:

These items will not be measured for payment.

BASIS OF PAYMENT:

Item 803.9916 "REMOVE AND DISPOSE PORTIONS OF EXISTING CONCRETE SUPERSTRUCTURE" & Item 803.9917 "REMOVE AND DISPOSE PORTIONS OF EXISTING CONCRETE SUBSTRUCTURE", will be paid for at their respective contract "Lump Sum" prices as listed in the Proposal. The prices so stated shall constitute full and complete compensation for all labor, materials, tools and equipment, and all other incidentals required to complete the work as described in these Special Provisions and elsewhere in the Contract Documents, complete in place and accepted by the Engineer.

CODE 903.9902
TEMPORARY CHAIN LINK FENCE, 6 FT. HIGH
CODE 903.9903
TEMPORARY CHAIN LINK FENCE GATE, 6 FT. HIGH, 20 FT. WIDE

DESCRIPTION:

This work of this item shall include furnishing and installing chain link fence 6 feet high and chain link gates 6 feet high by 20 feet wide at the locations shown on the plans and as directed by the Engineer. The temporary chainlink fence shall be removed and disposed of by the Contractor after the work is complete.

MATERIALS:

The materials used shall conform to Sections 903 and M.08 of the Rhode Island Standard Specifications for Road and Bridge Construction.

METHOD OF CONSTRUCTION:

Method of Construction shall conform to Section 903 of the Rhode Island Standard Specifications for Road and Bridge Construction. Temporary chainlink fence and gate may be supported at its base by either concrete blocks or metal feet, fabricated of similar materials to receive and support the fence posts. Holes for fence posts, if utilized, installed in bituminous or concrete pavement, shall be cored. Posts for temporary fence need not be set in concrete or grouted in holes in rock. The temporary fence and gate shall become the property of the Contractor and shall be removed and disposed of by the Contractor upon completion of the project.

Fence sections may be fabricated in modular panels provided that panels are fastened together with approved clamping devices when erected.

The fence and gate may be moved or removed and reset to accommodate the Contractor's operations, however the fence shall secure the site at the end of work each day. No separate or additional payment shall be made for moving or removing and resetting the fence and gate to accommodate the Contractor's sequence. The Contractor shall maintain the fence and gate in good working condition.

METHOD OF MEASUREMENT:

"Code 903.9902 Temporary Chain Link Fence, 6 Ft. High" shall be measured by the Linear Foot, "LF", outside to outside of end posts of fence actually installed in accordance with the plans and/or as directed by the Engineer. "Code 903.9903, Temporary Chain Link Fence Gate, 6 Ft. High, 20 Ft. Wide " shall be measured by the unit "Each" for each 20 foot wide gate installed in accordance with the plans and/or as directed by the Engineer.

BASIS OF PAYMENT:

The measured quantity of “Code 903.9902, Temporary Chain Link Fence, 6 Ft. High” shall be paid for at the contract bid price per Linear Foot, “LF”, as listed in the proposal. The measured quantity of “Code 903.9903, Temporary Chain Link Fence Gate, 6 Ft. High, 20 Ft. Wide” shall be paid for at the contract bid price per “Each” as listed in the proposal. The prices shall include all labor, materials, equipment, hardware, coring pavement, concrete, clearing and other incidentals necessary to finish the work, complete and accepted by the Engineer. No separate payment shall be made for moving, removing and resetting the fence and gate to accommodate the Contractor’s sequence of work.

This Page Intentionally Left Blank

This Page Intentionally Left Blank

CODE 931.99 CLEANING AND SWEEPING PAVEMENT

DESCRIPTION:

The work of this item shall include cleaning and sweeping public roadway pavement surfaces once a week and as directed by the Engineer.

MATERIALS:

The materials used shall conform to section 931 of the Rhode Island Standard Specifications for Road and Bridge Construction.

METHOD OF CONSTRUCTION:

The Method of Construction shall conform to section 931 of the Rhode Island Standard Specifications for Road and Bridge Construction. In addition, no material shall be swept into or placed within any portion of any closed drainage system within the project limits or any roadway outside of the project limits.

The Contractor shall perform the cleaning and sweeping of pavement at the end of the work day on every Friday of each week, starting with the commencement of work and ending with the project completion. Public roadways to be cleaned and swept under these Special Provisions shall include the following locations at a minimum:

Scituate Avenue (R.I. Route 12): Intersection of R.I. Route 12 and R.I. Route 116 – Intersection of R.I. Route 12 and Howard Avenue.

METHOD OF MEASUREMENT:

This item will not be measured for payment.

BASIS OF PAYMENT:

Item 931.99 “CLEANING AND SWEEPING PAVEMENT” will not be paid for separately, but shall be considered a subsidiary obligation of the Contractor, with the costs thereof distributed among the contract unit prices for other items of work.

Failure to Comply. If, in the judgment of the Engineer, the Contractor fails to adequately keep public roadways clean along any portion of the project, the following liquidated damages and penalty will be assessed.

For each day the Engineer determines that the Contractor has failed to comply with these Special Provisions, the daily charge of $500 per day will be deducted from monies due to the Contractor.

Table of Contents - Distribution of Quantities

Project Name - Kent Dam Spillway Bridge No. 84 & Scituate Ave 1R
Estimate Name - Addendum 1 to Kent Dam Spillway Bridge No. 84
R.I. Contract No. - 2013-CB-080
FAP Nos: BHO-0084(003), STP-RESF(275), STP-TEA3(039)

ItemCode	Description	Page
201.0321	CLEARING AND GRUBBING	1
201.0403	REMOVE AND DISPOSE SIDEWALKS	1
201.0409	REMOVE AND DISPOSE FLEXIBLE PAVEMENT	1
201.0410	REMOVE AND DISPOSE CATCH BASINS	1
201.0414	REMOVE AND DISPOSE PIPE - ALL SIZES	1
201.0415	REMOVE AND DISPOSE GUARDRAIL AND POST ALL TYPES	1
201.0428	REMOVE AND DISPOSE FRAME AND GRATE OR FRAME AND COVER	2
201.0432	REMOVE AND DISPOSE HEADWALL	2
201.9901	REMOVE AND DISPOSE DRY RUBBLE CURB	2
201.9902	REMOVE AND STOCKPILE SHOCK ABSORBING BARRIER MODULES LEFT IN PLACE	3
201.9903	**REMOVE AND STOCKPILE DRUM BARRICADE STD. 26.2.0 WITH FLASHING WARNING LIGHTS LEFT IN PLACE**	**3**
201.9904	**REMOVE AND STOCKPILE PRECAST CONCRETE MEDIAN BARRIER FOR TEMP. TRAFFIC CONTROL STD 40.5.0 LEFT IN PLACE**	**3**
201.9905	REMOVE AND STOCKPILE PROTECTIVE CHAIN LINK FENCE 6 FEET HIGH	3
201.9906	REMOVE AND STOCKPILE EXISTING GUARDRAIL REFLECTIVE PANELS	4
201.9907	REMOVE AND STOCKPILE TEMP. CONSTRUCTION SIGNS LEFT IN PLACE AND WARNING SIGNS	4
201.9908	REMOVE AND STOCKPILE GUARDRAIL CONNECTION TO BARRIER - APPROACH END SECTION - STD 34.3.7	4
201.9909	REMOVE AND STOCKPILE GUARDRAIL CONNECTION TO BARRIER - TRAILING END SECTION - STD 34.3.8	4
201.9910	REMOVE AND DISPOSE FLEXIBLE PAVEMENT AND BASE	4
201.9911	OLD SCITUATE AVENUE PAVEMENT REMOVAL	5
202.0100	EARTH EXCAVATION	5
202.0700	COMMON BORROW	5
203.0100	STRUCTURAL EXCAVATION EARTH	6
203.0220	STRUCTURAL EXCAVATION ROCK MECHANICAL	6
203.0600	FILL GRAVEL BORROW UNDER STRUCTURES	6
203.9901	GEOFOAM LIGHTWEIGHT FILL (EPS)	6
204.0100	TRIMMING AND FINE GRADING	6
206.0201	BALED HAY EROSION CHECK STANDARD 9.1.0	7
206.0208	REMOVAL OF BALED HAY EROSION CHECKS	7
209.0110	BALED HAY CATCH BASIN INLET PROTECTION STANDARD 9.8.0	8
212.2000	CLEANING AND MAINTENANCE OF EROSION CONTROLS	8
213.0100	PLACEMENT OF MILLINGS BENEATH GUARDRAIL	9
302.0100	GRAVEL BORROW SUBBASE COURSE	9
303.0100	SPECIAL GRADED AGGREGATE FOR SHAPING AND TRIMMING DRIVEWAYS OR SHOULDERS	9
401.9901	MODIFIED CLASS 9.5 HMA	10
401.9902	MODIFIED CLASS 12.5 HMA	10
401.9903	CLASS 19.0 HMA WITH PAY ADJUSTMENTS	11
403.0300	ASPHALT EMULSION TACK COAT	11
601.0200	CLASS XX PORTLAND CEMENT CONCRETE	12
601.0300	CLASS A PORTLAND CEMENT CONCRETE	12
603.1000	CONTROLLED LOW STRENGTH MATERIAL	12
701.0412	REINFORCED CONCRETE PIPE M 170 CLASS III 12 INCH	12
702.0516	FRAME AND GRATE, HIGH CAPACITY, STANDARD 6.3.4	13
702.0717	DOUBLE GRATE CATCH BASIN STANDARD 3.3.5	13
702.9902	REPLACE GAINER DAM DRAINAGE STRUCTURE CEMENT CONCRETE COVERS	13
707.0955	**ADJUST ELECTRICAL MANHOLE TO GRADE**	**13**
708.9041	CLEANING CATCH BASINS ALL TYPES AND SIZES	14
709.0100	CONCRETE CONNECTING COLLAR STANDARD 1.3.0	14

Table of Contents - Distribution of Quantities

Project Name - Kent Dam Spillway Bridge No. 84 & Scituate Ave 1R
Estimate Name - Addendum 1 to Kent Dam Spillway Bridge No. 84
R.I. Contract No. - 2013-CB-080
FAP Nos: BHO-0084(003), STP-RESF(275), STP-TEA3(039)

ItemCode	Description	Page
711.0110	3'' PAVED WATERWAY CLASS I-1 STANDARD 8.4.0	14
803.9901	REMOVE & DISPOSE PORTIONS OF EXISTING CONCRETE SUPERSTRUCTURE	15
803.9902	REMOVE & DISPOSE PORTIONS OF EXISTING CONCRETE SUBSTRUCTURE	15
803.9903	TEMPORARY PROTECTIVE SHIELDING	15
803.9905	FLOATING OIL CONTAINMENT BOOM	15
803.9906	REMOVE & REPLACE EXISTING CONCRETE STAIRS IN KIND	15
808.0322	CONCRETE SUBSTRUCTURE CLASS HP 3/4'' END POSTS	15
808.0323	CONCRETE SUBSTRUCTURE CLASS HP 3/4'' PARAPETS	16
808.0324	CONCRETE SUBSTRUCTURE CLASS HP 3/4'' BRIDGE SIDEWALK	16
808.1501	CONCRETE SUPERSTRUCTURE CLASS HP 3/4'' BRIDGE DECKS	16
808.1502	CONCRETE SUPERSTRUCTURE CLASS HP 3/4'' BRIDGE SIDEWALKS	16
808.1503	CONCRETE SUPERSTRUCTURE CLASS HP 3/4'' PARAPETS	16
808.1810	CONCRETE SURFACE FINISHING RUBBED REGULAR	16
808.1820	CONCRETE SURFACE FINISHING BUSH HAMMERED	17
808.9901	CONCRETE SUBSTRUCTURE CLASS HP 3/4" SAFETY CURB	17
808.9902	CONCRETE SUPERSTRUCTURE CLASS HP 3/4" SAFETY CURB	17
808.9903	CONCRETE SUBSTRUCTURE CLASS HP 3/4" CONNECTOR SLAB	17
808.9904	CONCRETE SUPERSTRUCTURE CLASS HP 3/4" UTILITY ROOM SLAB	17
808.9905	CONCRETE SUPERSTRUCTURE CLASS HP 3/4" ARCH RIB	18
808.9906	CONCRETE SUPERSTRUCTURE CLASS HP 3/4" SPANDREL WALL	18
810.0300	EPOXY COATED BARS GRADE 60	18
813.0100	DAMPPROOFING	18
813.0200	PREFORMED WATERPROOFING MEMBRANE	18
817.2140	REPAIRS TO STRUCTURAL CONCRETE MASONSRY FORM AND CAST IN PLACE	18
819.0800	DRILL AND GROUT REINFORCING DOWELS	19
824.9901	STEEL DOOR, FRAME & HARDWARE	19
829.9901	BRIDGE DRAIN SYSTEM 4" PVC	19
833.0400	GRANITE IDENTIFICATION TABLETS	19
834.9901	VERTICAL FACE GRANITE CURB STRAIGHT 7 1/2" REVEAL	19
836.0100	STRUCTURAL CONCRETE CRACK REPAIR BY EPOXY-RESIN BASE ADHESIVE INJECTION	19
901.0101	GUARDRAIL STEEL BEAM SINGLE FACE EARTH AND ASPHALT	20
901.0190	GUARDRAIL STEEL BEAM ANCHORAGE APPROACH SECTION STANDARDS 34.3.1 AND 34.3.3	20
901.0191	GUARDRAIL STEEL BEAM ANCHORAGE TRAILING END SECTION STANDARD 34.3.4	20
901.0196	GUARDRAIL CONNECTION TO EXISTING ENDPOST TRAILING END SECTION, STANDARD 34.3.6	20
901.0197	GUARDRAIL CONNECTION TO EXISTING ENDPOST APPROACH END SECTION, STANDARD 34.3.5	20
903.0231	DOUBLE GATE, CHAIN LINK 6’ STANDARD 31.2.0	21
903.9901	6' CHAIN LINK FENCE RESET FROM STOCKPILE	21
905.0110	PORTLAND CEMENT SIDEWALK MONOLITHIC STANDARD 43.1.0	21
906.0110	GRANITE CURB, QUARRY SPLIT STRAIGHT, STANDARD 7.3.0	21
906.0118	6' GRANITE TRANSITION CURB, QUARRY SPLIT SPECIAL TRANSITION STANDARD 7.3.2	22
906.0602	BITUMINOUS BERM STANDARD 7.5.1	22
907.0100	WATER FOR DUST CONTROL	22
912.9901	REBUILD STONE WALLS IN HISTORIC, SCENIC OR RURAL AREAS	23
914.5010	**FLAGPERSONS**	**23**
914.5020	**FLAGPERSONS - OVERTIME**	**23**
920.0085	PLACED STONE RIPRAP R-3, R-4, R-5 STANDARD 8.3.0	23
920.0150	BEDDING FOR RIPRAP FS-2 STANDARD 8.3.0	24

Table of Contents - Distribution of Quantities

Project Name - Kent Dam Spillway Bridge No. 84 & Scituate Ave 1R
Estimate Name - Addendum 1 to Kent Dam Spillway Bridge No. 84
R.I. Contract No. - 2013-CB-080
FAP Nos: BHO-0084(003), STP-RESF(275), STP-TEA3(039)

ItemCode	Description	Page
920.0200	FILTER FABRIC FOR RIP-RAP	24
922.0100	TEMPORARY CONSTRUCTION SIGNS STANDARD 29.1.0 AND 27.1.1	24
923.0105	DRUM BARRICADE STANDARD 26.2.0	25
923.0120	**PLASTIC PIPE BARRICADE STANDARD 26.3.0**	**25**
923.0200	FLUORESCENT TRAFFIC CONES STANDARD 26.1.0	25
926.9901	3M SCOTCHLITE LINEAR DELINEATION SYSTEM (LDS) PANELS	25
929.0110	**FIELD OFFICE**	**25**
931.0110	CLEANING AND SWEEPING PAVEMENT	26
932.0100	CUTTING AND MATCHING ASPHALT	26
932.0200	FULL-DEPTH SAWCUT OF BITUMINOUS PAVEMENT	26
932.9901	FULL DEPTH SAWCUT OF BITUMINOUS PAVEMENT AND BASE	27
935.0400	REMOVING BITUMINOUS PAVEMENT BY MICRO MILLING	27
936.0110	MOBILIZATION	27
937.0200	MAINTENANCE AND MOVEMENT TRAFFIC PROTECTION	27
943.0200	TRAINEE MAN-HOURS	27
L01.0104	PLANTABLE SOIL 4 INCHES DEEP	28
L02.0101	GENERAL HIGHWAY SEEDING (TYPE 1)	28
T15.0100	DIRECTIONAL REGULATORY AND WARNING SIGNS	29
T16.0200	REMOVE AND RELOCATE GROUND MOUNTED SIGN	29
T20.0006	6 INCH WHITE FAST - DRYING WATERBORNE PAVEMENT MARKING PAINT	29
T20.0104	4 INCH YELLOW FAST - DRYING WATERBORNE PAVEMENT MARKING PAINT	29
T20.2006	6 INCH EPOXY RESIN PAVEMENT MARKINGS WHITE	30
T20.2014	4 INCH EPOXY RESIN PAVEMENT MARKINGS YELLOW	30
T20.9901	TWO-WAY REFLECTORIZED PAVEMENT MARKERS (SLOTTED IN PAVEMENT) YELLOW	31
808.1509	**CONCRETE SUPERSTRUCTURE CLASS HP 3/4'' WALLS**	**31**
821.1690	**SAW & SEALING JOINTS IN BITUMINOUS CONCRETE PAVEMENT**	**32**
903.9902	**TEMPORARY CHAIN LINK FENCE, 6 FT. HIGH**	**32**
903.9903	**TEMPORARY CHAIN LINK FENCE GATE, 6 FT. HIGH, 20 FT. WIDE**	**32**
926.0130	**PRECAST MEDIAN BARRIER FOR TEMPORARY TRAFFIC CONTROL STANDARD 40.5.0**	**32**

Distribution of Quantities

Project Name - Kent Dam Spillway Bridge No. 84 & Scituate Ave 1R
Estimate Name - Addendum 1 to Kent Dam Spillway Bridge No. 84
R.I. Contract No. - 2013-CB-080
FAP Nos: BHO-0084(003), STP-RESF(275), STP-TEA3(039)

Item No.	Item Code	Description	UM	Qty.	Pay Code	Seq. No.
010	**201.9902**	**REMOVE AND STOCKPILE SHOCK ABSORBING BARRIER MODULES LEFT IN PLACE**	**GRP**			
		BRIDGE NO. 84				
		NORTHEAST		1.00	0004	01
		Item 201.9902 Total:		**1.00**		
011	**201.9903**	**REMOVE AND STOCKPILE DRUM BARRICADE STD. 26.2.0 WITH FLASHING WARNING LIGHTS LEFT IN PLACE**	**EACH**			
		BRIDGE NO. 84				
		EASTBOUND		2.00	0004	01
		WESTBOUND		4.00	0004	01
		Item 201.9903 Total:		**6.00**		
012	**201.9904**	**REMOVE AND STOCKPILE PRECAST CONCRETE MEDIAN BARRIER FOR TEMP. TRAFFIC CONTROL STD 40.5.0 LEFT IN PLACE**	**LF**			
		BRIDGE NO. 84				
		NORTHEAST		20.00	0004	01
		NORTHWEST		30.00	0004	01
		SOUTHEAST		20.00	0004	01
		SOUTHWEST		20.00	0004	01
		Item 201.9904 Total:		**90.00**		
S013	**201.9905**	**REMOVE AND STOCKPILE PROTECTIVE CHAIN LINK FENCE 6 FEET HIGH**	**LF**			
		BRIDGE NO. 84				
		STA 7+45 - 10+00 LT		255.00	0004	01
		STA 7+45 - 10+00 RT		255.00	0004	01
		Item 201.9905 Total:		**510.00**		

Distribution of Quantities

Project Name - Kent Dam Spillway Bridge No. 84 & Scituate Ave 1R
Estimate Name - Addendum 1 to Kent Dam Spillway Bridge No. 84
R.I. Contract No. - 2013-CB-080
FAP Nos: BHO-0084(003), STP-RESF(275), STP-TEA3(039)

Item No.	Item Code	Description	UM	Qty.	Pay Code	Seq. No.
045	707.0955 Cont.	SCITUATE AVE				
		STA 24+33 LT		1.00	0004	01
		STA 36+94 LT		1.00	0004	01
		STA 41+10 LT		1.00	0004	01
		STA 43+33 LT		1.00	0004	01
		Item 707.0955 Total:		**4.00**		
046	708.9041	**CLEANING CATCH BASINS ALL TYPES AND SIZES**	**EACH**			
		SCITUATE AVE				
		STA 13+91 RT		1.00	0004	01
		STA 16+84 RT		1.00	0004	01
		STA 19+80 RT		1.00	0004	01
		STA 22+75 RT		1.00	0004	01
		STA 25+70 RT		1.00	0004	01
		STA 28+66 RT		1.00	0004	01
		STA 31+61 RT		1.00	0004	01
		STA 34+55 RT		1.00	0004	01
		STA 37+50 RT		1.00	0004	01
		STA 40+50 RT		1.00	0004	01
		Item 708.9041 Total:		**10.00**		
047	709.0100	**CONCRETE CONNECTING COLLAR STANDARD 1.3.0**	**CY**			
		BRIDGE NO. 84				
		STA 5+33 RT		1.00	0004	01
		Item 709.0100 Total:		**1.00**		
048	711.0110	**3'' PAVED WATERWAY CLASS I-1 STANDARD 8.4.0**	**SY**			
		BRIDGE NO. 84				
		STA 7+35 RT		5.00	0004	01
		Item 711.0110 Total:		**5.00**		

Distribution of Quantities

Project Name - Kent Dam Spillway Bridge No. 84 & Scituate Ave 1R
Estimate Name - Addendum 1 to Kent Dam Spillway Bridge No. 84
R.I. Contract No. - 2013-CB-080
FAP Nos: BHO-0084(003), STP-RESF(275), STP-TEA3(039)

Item No.	Item Code	Description	UM	Qty.	Pay Code	Seq. No.
089	**907.0100 Cont.**	STA 7+36 - 7+45 LT&RT (PVMTP)		0.02	0004	01
		OLD SCITUATE AVE				
		PAVEMENT REMOVAL		16.00	0004	01
		SCITUATE AVE				
		ROUNDING		0.81	0004	01
		STA 10+50 - 13+43		3.00	0004	01
		STA 13+43 - 19+43		6.00	0004	01
		STA 19+43 - 25+43		6.00	0004	01
		STA 25+43 - 31+43		6.00	0004	01
		STA 31+43 - 37+43		6.00	0004	01
		STA 37+43 - 43+43		7.00	0004	01
		STA 43+43 - 45+75		2.00	0004	01
		Item 907.0100 Total:		**53.00**		
090	**912.9901**	**REBUILD STONE WALLS IN HISTORIC, SCENIC OR RURAL AREAS**	**SF**			
		BRIDGE NO. 84				
		STA 6+90 - 7+40 RT		150.00	0004	01
		STA 7+40 - 7+45 LT		15.00	0004	01
		Item 912.9901 Total:		**165.00**		
091	**914.5010**	**FLAGPERSONS**	**MHRS**			
		BRIDGE NO. 84				
		TEMPORARY TRAFFIC CONTROL		120.00	0004	01
		Item 914.5010 Total:		**120.00**		
092	**914.5020**	**FLAGPERSONS - OVERTIME**	**MHRS**			
		BRIDGE NO. 84				
		TEMPORARY TRAFFIC CONTROL		40.00	0004	01
		Item 914.5020 Total:		**40.00**		
093	**920.0085**	**PLACED STONE RIPRAP R-3, R-4, R-5 STANDARD 8.3.0**	**CY**			

Distribution of Quantities

Project Name - Kent Dam Spillway Bridge No. 84 & Scituate Ave 1R
Estimate Name - Addendum 1 to Kent Dam Spillway Bridge No. 84
R.I. Contract No. - 2013-CB-080
FAP Nos: BHO-0084(003), STP-RESF(275), STP-TEA3(039)

Item No.	Item Code	Description	UM	Qty.	Pay Code	Seq. No.
096	922.0100 Cont.	R11-3A (1) (30" X 60")		13.00	0004	01
		SPECIAL-1 (8) (24" X 12")		16.00	0004	01
		Item 922.0100 Total:		**274.00**		
097	923.0105	**DRUM BARRICADE STANDARD 26.2.0**	**BDAY**			
		BRIDGE NO. 84				
		INTERSECTION OF RT 16 & RT 12		3,240.00	0004	01
		ROAD CLOSED SIGNS		4,320.00	0004	01
		STA 2+20		2,160.00	0004	01
		Item 923.0105 Total:		**9,720.00**		
098	923.0120	**PLASTIC PIPE BARRICADE STANDARD 26.3.0**	**EACH**			
		BRIDGE NO. 84				
		12				
		INTERSECTION OF RT. 16 & RT.		1.00	0004	01
		STA 0+00		1.00	0004	01
		STA 2+20		1.00	0004	01
		STA 47+00		1.00	0004	01
		Item 923.0120 Total:		**4.00**		
099	923.0200	**FLUORESCENT TRAFFIC CONES STANDARD 26.1.0**	**EACH**			
		PROJECTWIDE				
		AS DIRECTED		10.00	0004	01
		Item 923.0200 Total:		**10.00**		
100	926.9901	**3M SCOTCHLITE LINEAR DELINEATION SYSTEM (LDS) PANELS**	**LF**			
		BRIDGE NO. 84				
		STA 4+90 - 7+22 LT		152.00	0004	01
		Item 926.9901 Total:		**152.00**		

Distribution of Quantities

Project Name - Kent Dam Spillway Bridge No. 84 & Scituate Ave 1R
Estimate Name - Addendum 1 to Kent Dam Spillway Bridge No. 84
R.I. Contract No. - 2013-CB-080
FAP Nos: BHO-0084(003), STP-RESF(275), STP-TEA3(039)

Item No.	Item Code	Description	UM	Qty.	Pay Code	Seq. No.
101	**929.0110**	**FIELD OFFICE**	**PMO**			
		PROJECTWIDE				

Distribution of Quantities

Project Name - Kent Dam Spillway Bridge No. 84 & Scituate Ave 1R
Estimate Name - Addendum 1 to Kent Dam Spillway Bridge No. 84
R.I. Contract No. - 2013-CB-080
FAP Nos: BHO-0084(003), STP-RESF(275), STP-TEA3(039)

Item No.	Item Code	Description	UM	Qty.	Pay Code	Seq. No.
101	929.0110 Cont.	AS DIRECTED		18.00	0004	01
		Item 929.0110 Total:		**18.00**		
102	931.0110	**CLEANING AND SWEEPING PAVEMENT**	**HSY**			
		BRIDGE NO. 84 (PVMT1)				
		STA 3+50 - 6+25 (PVMT1)		8.40	0004	01
		STA 6+25 - 7+36 (PVMT1)		3.00	0004	01
		SCITUATE AVE				
		STA 10+50 - 12+50		6.00	0004	01
		STA 12+50 - 13+43		3.00	0004	01
		STA 13+43 - 19+43		16.00	0004	01
		STA 19+43 - 25+43		16.00	0004	01
		STA 25+43 - 31+43		16.00	0004	01
		STA 31+43 - 37+43		16.00	0004	01
		STA 37+43 - 42+75		14.00	0004	01
		STA 42+75 - 43+43		2.00	0004	01
		STA 43+43 - 45+75		6.00	0004	01
		Item 931.0110 Total:		**106.40**		
103	932.0100	**CUTTING AND MATCHING ASPHALT**	**LF**			
		BRIDGE NO. 84				
		STA 3+50 LT&RT		30.00	0004	01
		SCITUATE AVE				
		45+75		32.00	0004	01
		Item 932.0100 Total:		**62.00**		
104	932.0200	**FULL-DEPTH SAWCUT OF BITUMINOUS PAVEMENT**	**LF**			
		BRIDGE NO. 84				
		STA 3+50 - 6+25 LT		275.00	0004	01
		STA 3+50 - 6+25 RT		275.00	0004	01
		STA 6+25 - 7+36 LT		111.00	0004	01
		STA 6+25 - 7+36 RT		111.00	0004	01

Distribution of Quantities

Project Name - Kent Dam Spillway Bridge No. 84 & Scituate Ave 1R
Estimate Name - Addendum 1 to Kent Dam Spillway Bridge No. 84
R.I. Contract No. - 2013-CB-080
FAP Nos: BHO-0084(003), STP-RESF(275), STP-TEA3(039)

Item No.	Item Code	Description	UM	Qty.	Pay Code	Seq. No.
S117	**T20.2014 Cont.**	BRIDGE NO. 84				
		STA 3+50 - 6+25		550.00	0004	01
		STA 6+25 - 10+50		850.00	0004	01
		SCITUATE AVE				
		STA 10+50 - 13+43		586.00	0004	01
		STA 13+43 - 19+43		1,200.00	0004	01
		STA 19+43 - 25+43		1,200.00	0004	01
		STA 25+43 - 31+43		1,200.00	0004	01
		STA 31+43 - 37+43		1,200.00	0004	01
		STA 37+43 - 43+43		1,200.00	0004	01
		STA 43+43 - 45+75		464.00	0004	01
		Item T20.2014 Total:		**8,450.00**		
S118	**T20.9901**	**TWO-WAY REFLECTORIZED PAVEMENT MARKERS (SLOTTED IN PAVEMENT) YELLOW**	**EACH**			
		BRIDGE NO. 84				
		STA 3+50 - 6+25		14.00	0004	01
		STA 6+25 - 10+50		20.00	0004	01
		SCITUATE AVE				
		STA 10+50 - 13+43		16.00	0004	01
		STA 13+43 - 19+43		30.00	0004	01
		STA 19+43 - 25+43		30.00	0004	01
		STA 25+43 - 31+43		30.00	0004	01
		STA 31+43 - 37+43		30.00	0004	01
		STA 37+43 - 43+43		30.00	0004	01
		Item T20.9901 Total:		**200.00**		
119	**808.1509**	**CONCRETE SUPERSTRUCTURE CLASS HP 3/4'' WALLS**	**CY**			
		BRIDGE NO. 84				
		BRIDGE NO. 84		1.00	0014	02
		Item 808.1509 Total:		**1.00**		

Distribution of Quantities

Project Name - Kent Dam Spillway Bridge No. 84 & Scituate Ave 1R
Estimate Name - Addendum 1 to Kent Dam Spillway Bridge No. 84
R.I. Contract No. - 2013-CB-080
FAP Nos: BHO-0084(003), STP-RESF(275), STP-TEA3(039)

Item No.	Item Code	Description	UM	Qty.	Pay Code	Seq. No.
120	821.1690	**SAW & SEALING JOINTS IN BITUMINOUS CONCRETE PAVEMENT**	**LF**			
		BRIDGE NO. 84				
		BRIDGE NO. 84		93.00	0014	02
		Item 821.1690 Total:		**93.00**		
121	903.9902	**TEMPORARY CHAIN LINK FENCE, 6 FT. HIGH**	**LF**			
		BRIDGE NO. 84				
		STA 2+50 LT & RT		32.00	0004	01
		STA 46+75 LT & RT		32.00	0004	01
		Item 903.9902 Total:		**64.00**		
122	903.9903	**TEMPORARY CHAIN LINK FENCE GATE, 6 FT. HIGH, 20 FT. WIDE**	**LF**			
		BRIDGE NO. 84				
		STA 2+50		1.00	0004	01
		STA 46+75		1.00	0004	01
		Item 903.9903 Total:		**2.00**		
123	926.0130	**PRECAST MEDIAN BARRIER FOR TEMPORARY TRAFFIC CONTROL STANDARD 40.5.0**	**LF**			
		BRIDGE NO. 84				
		STA 11+00		20.00	0004	01
		STA 6+60		20.00	0004	01
		Item 926.0130 Total:		**40.00**		

FED. ROAD DIV. NO.	STATE	FEDERAL AID PROJECT NO.	FISCAL YEAR	SHEET NO.	TOTAL SHEETS
–	RI		2013	9	53

R-1

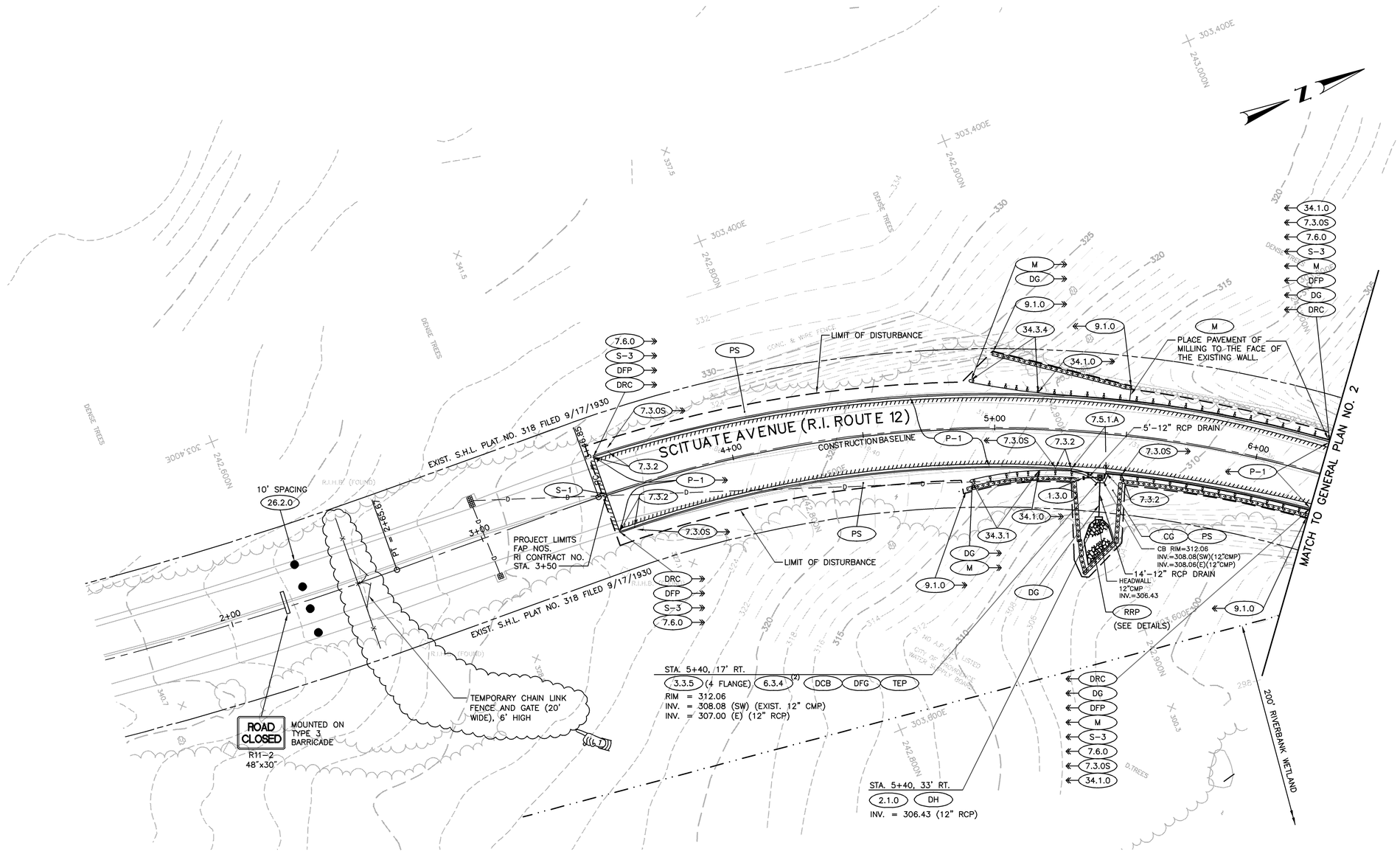

NOTE:
1. THE CONTRACTOR SHALL AVOID DRIVING POSTS THROUGH PAVED WATERWAYS BY OMITTING A POST AND NESTING EXTRA SECTIONS FOR ADDITIONAL STIFFNESS.

ADDENDUM No. 1

COMMONWEALTH ENGINEERS & CONSULTANTS, INC.
400 SMITH STREET
PROVIDENCE, RI 02908

REVISIONS		
NO.	DATE	BY
1	8/30/13	NS

RHODE ISLAND
DEPARTMENT OF TRANSPORTATION

BRIDGE REHABILITATION/1R IMPROVEMENTS
KENT DAM SPILLWAY BRIDGE No. 84/GAINER DAM
SCITUATE AVENUE (ROUTE 12)
SCITUATE, RHODE ISLAND

GENERAL PLAN NO. 1

CHECKED BY _____ DATE _____ SCALE 1"=20'

0143B_V1_009_GENERAL001_ADD01

P:\0100\0100\0100 Kent Dam Spillway Bridge\Transportation\Drawings\PLAN SERVICING\0143B_V1_009_GENERAL001_ADD01.dwg 9/10/2013 10:07:07 AM, RMM

FED. ROAD DIV. NO.	STATE	FEDERAL AID PROJECT NO.	FISCAL YEAR	SHEET NO.	TOTAL SHEETS
–	RI		2013	10	53

R-1

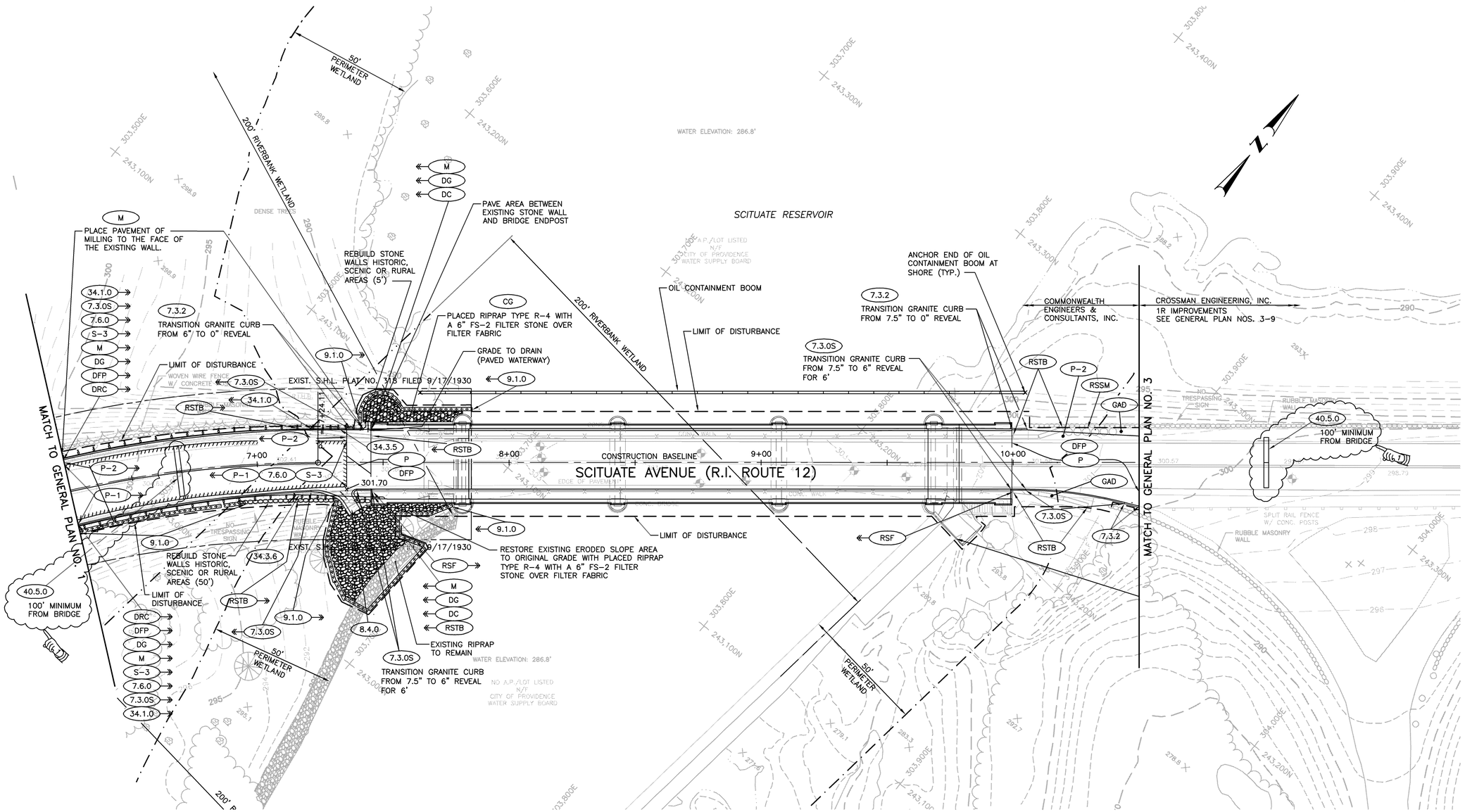

NOTE:

1. THE CONTRACTOR SHALL AVOID DRIVING POSTS THROUGH PAVED WATERWAYS BY OMITTING A POST AND NESTING EXTRA SECTIONS FOR ADDITIONAL STIFFNESS.
2. TRANSITION GRANITE CURB FROM 7.5" TO 6" REVEAL AT BRIDGE APPROACH.
3. THE CONTRACTOR SHALL PROVIDE PROVIDENCE WATER SUPPLY BOARD TO ACCESS TO THE CATWALK AT THE SPILLWAY AND BUILDING TO THE TOP OF THE DAM AT ALL TIMES.

ADDENDUM No. 1

COMMONWEALTH ENGINEERS & CONSULTANTS, INC.
400 SMITH STREET
PROVIDENCE, RI 02908

REVISIONS		
NO.	DATE	BY
1	9/5/13	NS

RHODE ISLAND
DEPARTMENT OF TRANSPORTATION

BRIDGE REHABILITATION/1R IMPROVEMENTS
KENT DAM SPILLWAY BRIDGE No. 84/GAINER DAM
SCITUATE AVENUE (ROUTE 12)
SCITUATE, RHODE ISLAND

GENERAL PLAN NO. 2

CHECKED BY _____ DATE _____ SCALE 1"=20'

0143B_V1_010_GENERAL002_ADD01

FED. ROAD DIV. NO.	STATE	FEDERAL AID PROJECT NO.	FISCAL YEAR	SHEET NO.	TOTAL SHEETS
1	RI		2013	16	53

R-1

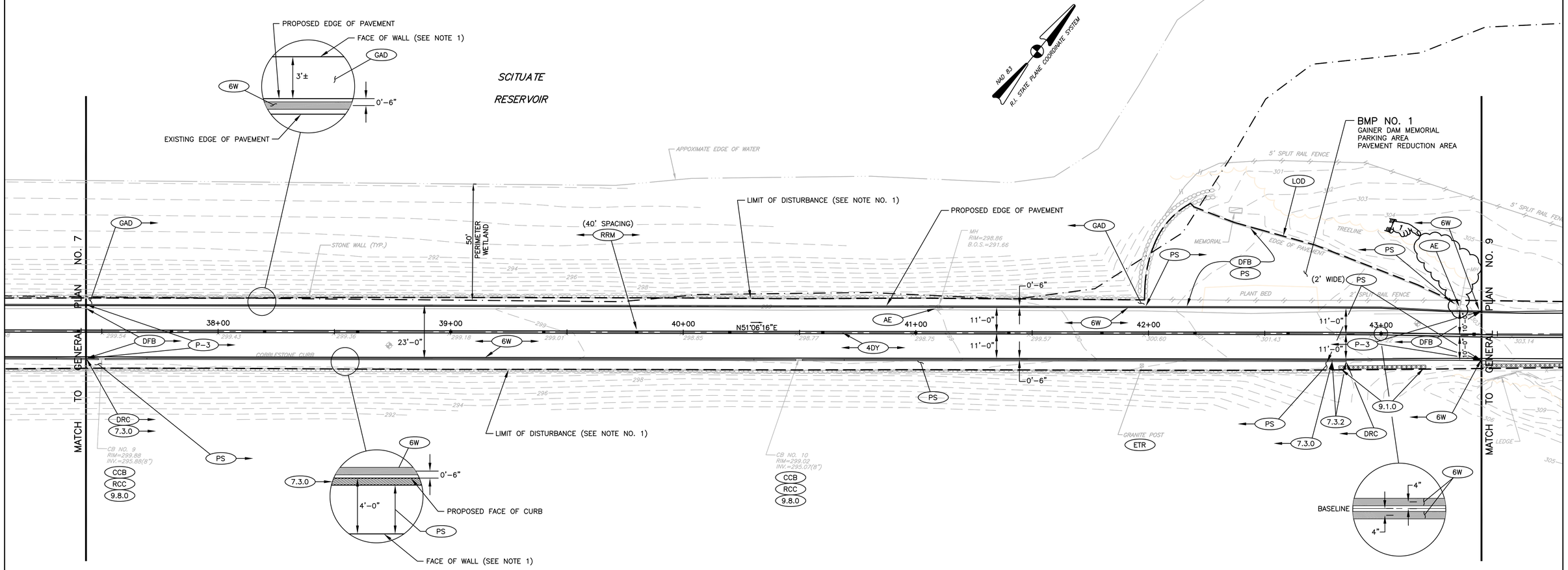

NOTES:

1. LIMIT OF DISTURBANCE IS THE STREET SIDE FACE OF EXISTING WALL.
2. EXISTING STONE WALLS TO REMAIN.

REVISIONS		
NO.	DATE	BY
1	9/9/13	JV

RHODE ISLAND
DEPARTMENT OF TRANSPORTATION

BRIDGE REHABILITATION/1R IMPROVEMENTS
KENT DAM SPILLWAY BRIDGE NO. 84/GAINER DAM
SCITUATE AVENUE (ROUTE 12)
SCITUATE RHODE ISLAND

GENERAL PLAN No. 8

CROSSMAN ENGINEERING
151 Centerville Road | Warwick, Rhode Island 02886

CHECKED BY _____ DATE _____ SCALE 1"=20'

ADDENDUM NO. 1

0143B_V1_016_GENERAL008_ADD01

S:\775.50 Gainer Dam - Scituate\Current\ACAD Dwg\DESIGN-PLANS\0143B_V1_016_GENERAL008_ADD01.dwg (Layout1) Plotted Sep 06, 2013 at 2:39pm

FED. ROAD DIV. NO.	STATE	FEDERAL AID PROJECT NO.	FISCAL YEAR	SHEET NO.	TOTAL SHEETS
1	RI		2013	17	53

R-1

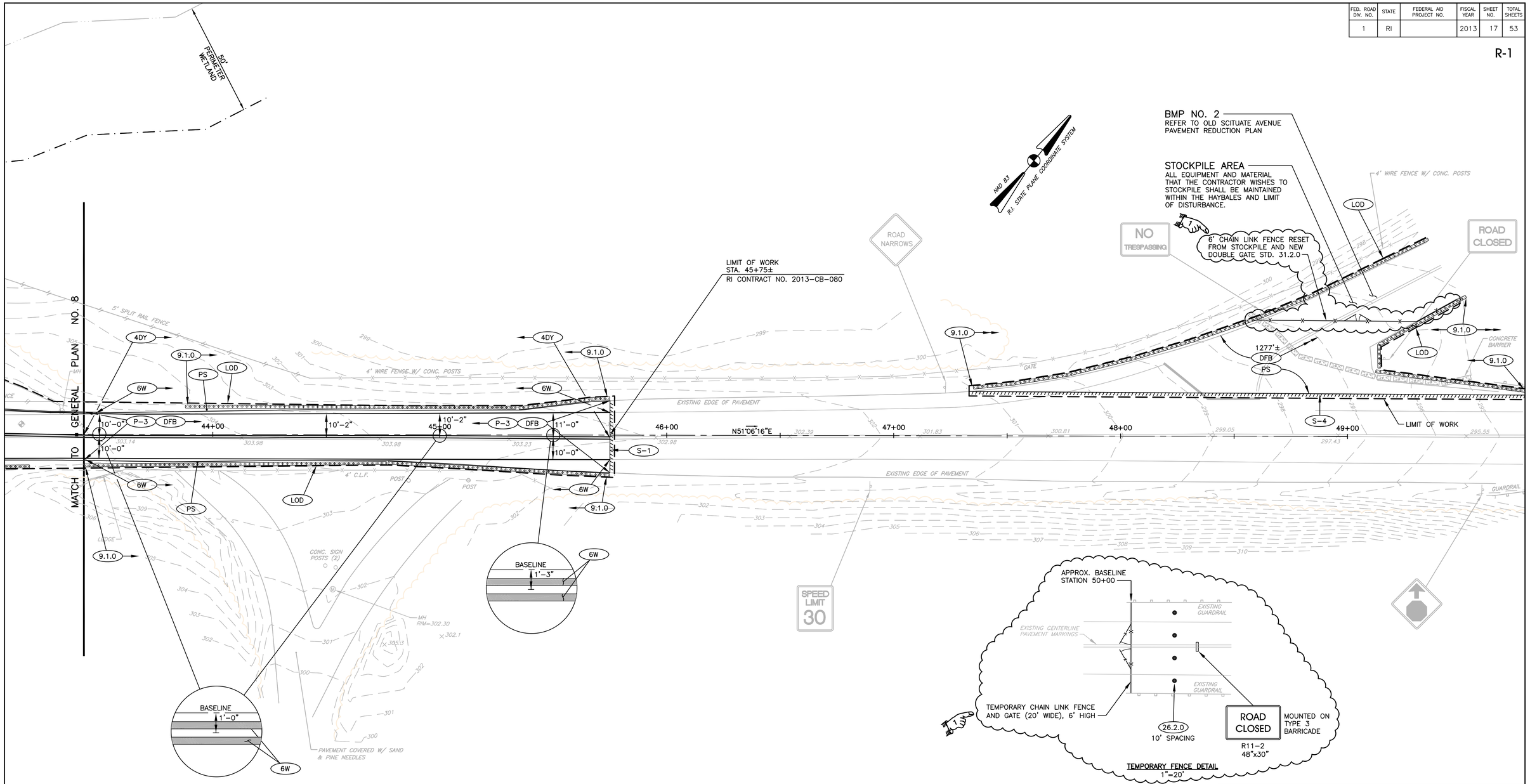

ADDENDUM NO. 1

REVISIONS		
NO.	DATE	BY
1	9/9/13	JV

RHODE ISLAND
DEPARTMENT OF TRANSPORTATION

BRIDGE REHABILITATION/1R IMPROVEMENTS
KENT DAM SPILLWAY BRIDGE NO. 84/GAINER DAM
SCITUATE AVENUE (ROUTE 12)
SCITUATE RHODE ISLAND

GENERAL PLAN No. 9

CROSSMAN ENGINEERING
151 Centerville Road | Warwick, Rhode Island 02886

CHECKED BY _____ DATE _____ SCALE 1"=20'

0143B_V1_017_GENERAL009_ADD01

S:\775.50 Gainer Dam - Scituate\Current\ACAD Dwg\DESIGN-PLANS\0143B_V1_017_GENERAL009_ADD01.dwg (Layout1) Plotted Sep 06, 2013 at 5:11pm

FED. ROAD DIV. NO.	STATE	FEDERAL AID PROJECT NO.	FISCAL YEAR	SHEET NO.	TOTAL SHEETS
–	RI		2013	33	53

R-1

MATERIALS

REINFORCING STEEL:

- AASHTO DESIGNATION M 31, GRADE 60

CONCRETE STRENGTHS:

- CLASS HP ¾" f'c=5,000 PSI — SPANDREL WALL, BRIDGE DECK, UTILITY ROOM SLAB, PARAPET CONNECTOR SLAB, SIDEWALK, SAFETY CURB, & END POST
- CLSM TYPE III — ARCH CAVITY LEVELING LAYER, VOIDS IN WEST APPROACH

CONCRETE NOTES

1. CONCRETE SHALL BE HIGH PERFORMANCE CLASS HP, AS DESCRIBED IN THE RI STANDARD SPECIFICATIONS AND THE SPECIAL PROVISIONS OF THE SPECIFICATIONS. REFER TO THE "MATERIAL" NOTES FOR CLASSES OF CONCRETE SPECIFIED FOR VARIOUS COMPONENTS.

   CONCRETE BRIDGE DECKS SHALL BE WET CURED CONTINUOUSLY FOR 14 DAYS. LOADS SHALL BE ALLOWED ON THE DECK AFTER 14 DAYS WET CURING AND 28 DAY COMPRESSIVE STRENGTH IS ATTAINED. WITH THE EXCEPTION OF CONCRETE BRIDGE DECKS, ALL CONCRETE CONTAINING SILICA FUME MUST BE WET CURED FOR 5 DAYS FOR NON SLAB STRUCTURES AND 7 DAYS FOR SLAB STRUCTURES.

2. THE CONTRACTOR MAY, AT THE APPROVAL OF THE ENGINEER, PROPOSE THE USE OF SELF-CONSOLIDATING CONCRETE FOR ANY CLASS OF CONCRETE ON THIS PROJECT. RI STANDARD SPECIFICATIONS SECTION 606 "SELF CONSOLIDATING CONCRETE (SCC)", CONTAINS THE REQUIREMENTS FOR MODIFYING ALL CLASSES OF CONCRETE MIX DESIGN FOR SELF-CONSOLIDATING APPLICATIONS.

3. ALL PORTLAND CEMENT CONCRETE SHALL BE AIR-ENTRAINED. (AE)

4. ALL REINFORCING STEEL SHALL BE EPOXY COATED. ALL WIRE TIES AND MISCELLANEOUS HARDWARE USED FOR PLACEMENT OF EPOXY COATED REINFORCING SHALL ALSO BE EPOXY COATED. EPOXY COATING FOR REINFORCING STEEL SHALL CONFORM TO AASHTO DESIGNATION M 284.

5. ALL CRITICAL LAP SPLICES SHALL BE AS SHOWN ON THE PLANS. ALL SPLICES NOT SHOWN ON THE PLANS SHALL BE LAPPED IN ACCORDANCE WITH THE AASHTO LRFD BRIDGE DESIGN SPECIFICATIONS FOR CLASS C LAP SPLICES.

6. UNLESS OTHERWISE INDICATED ON THE PLANS, ALL MAIN REINFORCING BARS SHALL HAVE THE FOLLOWING MINIMUM COVER:

CONCRETE CAST AGAINST OR PERMANENTLY EXPOSED TO EARTH (FOOTINGS, ABUTMENT AND WALL FACES, BACKWALLS)		3"
DECK SLABS (WITH WEARING SURFACE)	TOP	2" (+1/4", -0")
	BOTTOM	1" (+1/8", -0")
ALL OTHER BARS		2"

   COVER TO TIES AND STIRRUPS MAY BE 0.5 INCH LESS THAN THE ABOVE VALUES SPECIFIED FOR MAIN REINFORCING, BUT IN NO CASE LESS THAN 1.5 INCHES.

7. HORIZONTAL CONSTRUCTION JOINTS OTHER THAN THOSE SHOWN ON PLANS WILL NOT BE PERMITTED WITHOUT A WRITTEN REQUEST BY THE CONTRACTOR AND PRIOR AUTHORIZATION BY THE ENGINEER.

8. UNLESS OTHERWISE NOTED ON THE PLANS, ALL NEWLY POURED CONCRETE SURFACES VISIBLE IN ELEVATION TO ONE FOOT BELOW FINAL GROUND LINE (AND THE UNDERSIDE OF ALL CONCRETE DECK SLABS OUTSIDE OF THE FASCIA BEAMS), SHALL RECEIVE A CONCRETE SURFACE RUBBED FINISH IN ACCORDANCE WITH THE RI STANDARD SPECIFICATIONS.

9. ALL JOINT SEALANT SHALL BE POLYURETHANE, POLYURETHANE ELASTOMERIC, OR SILICONE SEALANT AS DESIGNATED ON THE PLANS. THE COLOR OF THE JOINT SEALANT, WHERE EXPOSED, SHALL BE NEUTRAL (LIGHT GRAY OR TAN). THE COLOR OF THE SEALANT, WHERE NOT EXPOSED, WILL BE AT THE DISCRETION OF THE CONTRACTOR.

10. UNLESS OTHERWISE NOTED ON THE PLANS, JOINT FILLER IS TO BE A PREFORMED, NON-EXPANSIVE, NON-EXTRUDING TYPE IN ACCORDANCE WITH SECTION M.02.11.1 OF THE RI STANDARD SPECIFICATIONS.

11. PLACEMENT, FINISHING AND CURING OF BRIDGE DECK CONCRETE SHALL BE IN ACCORDANCE WITH SECTION 814 OF THE RI STANDARD SPECIFICATIONS AND IN ACCORDANCE WITH THE SEQUENCE AND DIRECTION OF POURS AS SHOWN ON THE PLANS.

12. EMBEDMENT LENGTHS FOR DRILLED AND GROUTED DOWELS SHALL BE IN ACCORDANCE WITH SECTION 819 OF THE RI STANDARD SPECIFICATIONS.

13. IN ACCORDANCE WITH THE RI STANDARD SPECIFICATIONS, ALL METAL TIES OR ANCHORAGES WHICH ARE REQUIRED FOR CONCRETE FORMWORK SHALL BE SO CONSTRUCTED THAT THEY CAN BE REMOVED TO AT LEAST TWO INCHES BELOW THE EXPOSED SURFACE OF THE CONCRETE WITHOUT CAUSING DAMAGE TO THE CONCRETE SURFACE. SNAP TIES MAY BE USED ONLY IF APPROVED BY THE ENGINEER. IF THE CONTRACTOR PROPOSES TO USE THEM, A CATALOG CUT AND OTHER NECESSARY INFORMATION MUST BE SUBMITTED TO THE ENGINEER TO DEMONSTRATE THAT THE TIES WILL SNAP-OFF FAR ENOUGH INTO THE CONCRETE TO ALLOW FOR PROPER PATCHING. SNAP TIES MUST PROVIDE ADEQUATE STRENGTH TO SUPPORT THE FORMS. ALL CAVITIES SHALL BE FILLED WITH AN APPROVED CEMENT MORTAR MEETING THE REQUIREMENTS OF ASTM C 928.

MISCELLANEOUS JOINT NOTES:

ALL JOINT FILLERS AND JOINT SEALANTS OF ALL TYPES AND SIZES AS INDICATED ON THE CONTRACT DRAWINGS AND AS SPECIFIED IN SECTION 808 OF THE RI STANDARD SPECIFICATIONS FOR ROAD AND BRIDGE CONSTRUCTION WILL NOT BE MEASURED FOR PAYMENT AND WILL NOT BE PAID FOR SEPARATELY. THESE ITEMS, WHICH INCLUDE BUT ARE NOT LIMITED TO POLYURETHANE JOINT SEALANTS, POLYURETHANE ELASTOMERIC JOINT SEALANTS, MASTIC JOINT SEALANTS, TAR PAPER, AND CLOSED CELL POLYETHYLENE FOAMS ARE CONSIDERED INCIDENTAL ITEMS. THESE ITEMS WILL BE PAID FOR UNDER THE VARIOUS ITEMS OF WORK IN THE CONTRACT .

BRIDGE PAVEMENT NOTES:

THE PAVEMENT STRUCTURE ON THE BRIDGE DECK, CONNECTOR SLABS, AND UTILITY ROOM SLAB, SHALL CONSIST OF 2 LAYERS OF MODIFIED CLASS 9.5 HMA, EACH 1½" THICK, OVER PREFORMED WATERPROOFING MEMBRANE UNLESS NOTED OTHERWISE ON THE PLANS.

CONSTRUCTION NOTE:

SHOULD THE CONTRACTOR'S MEANS AND METHODS REQUIRE DRILLING INTO PORTIONS OF THE EXISTING STRUCTURE, THE CONTRACTOR SHALL SUBMIT CALCULATIONS AND DRAWINGS STAMPED BY A PROFESSIONAL STRUCTURAL ENGINEER REGISTERED IN RHODE ISLAND, CERTIFYING THAT THE AFFECTED EXISTING BRIDGE COMPONENT(S) HAVE ADEQUATE STRUCTURAL CAPACITY TO SUSTAIN THE IMPOSED LOADING FROM THE INTENDED CONSTRUCTION. AFFECTED EXISTING BRIDGE COMPONENT(S) WHICH ARE ALSO DESIGNATED TO REMAIN, SHALL BE RESTORED TO ORIGINAL CONDITIONS TO THE SATISFACTION OF THE ENGINEER.

INTEGRALLY COLORED CONCRETE NOTE:

ALL NEWLY CAST CONCRETE VISIBLE IN ELEVATION SHALL BE INTERGRALLY COLORED IN ACCORDANCE WITH SPECIAL PROVISION CODE 601.99.

DAMPPROOFING NOTE:

DAMPPROOF ALL INTERIOR CONCRETE SURFACES OF ARCH RIB, CROSS WALLS AND SPANDREL WALLS PRIOR TO PLACEMENT OF PREFORMED POLYETHYLENE FOAM, CLSM FILL, AND GEOFOAM.

UTILITY ROOM NOTE:

THE CONTRACTOR SHALL COORDINATE WITH THE PROVIDENCE WATER SUPPLY BOARD (PWSB), THE REMOVAL, STOCKPILING, AND RESETTING OF EXISTING PWSB MATERIAL WITHIN THE UTILITY ROOM. THE COST OF THIS WORK SHALL BE CONSIDERED INCLUDED IN THE BID PRICES OF THE APPROPRIATE ITEMS AS LISTED IN THE PROPOSAL.

SPECIAL NOTE:

THE CONTRACTOR SHALL BE RESPONSIBLE FOR MAINTAINING THE STABILITY OF THE EXISTING BRIDGE STRUCTURE DURING ALL PHASES OF CONSTRUCTION.

CONCRETE DECK AND SLAB NOTE:

THE "CONNECTOR SLAB", "BRIDGE DECK", AND "UTILITY ROOM SLAB" SHALL BE CONSTRUCTED IN ACCORDANCE WITH THE RI STANDARD SPECIFICATIONS, SECTIONS 808, 814, AND ALL OTHER APPLICABLE SECTIONS, EXCEPT THAT A FINISHING MACHINE IS NOT REQUIRED FOR THE CONNECTOR SLAB. THE CONNECTOR SLAB SHALL BE CONSTRUCTED TO THE GRADES AS INDICATED ON THE CONTRACT DRAWINGS AND HAVE A FINAL FINISH SUITABLE FOR APPLICATION OF PREFORMED WATERPROOFING MEMBRANE.

1

ADDENDUM No. 1

REVISIONS		
NO.	DATE	BY
1	9/11/13	WK

RHODE ISLAND
DEPARTMENT OF TRANSPORTATION

BRIDGE REHABILITATION/1R IMPROVEMENTS
KENT DAM SPILLWAY BRIDGE No. 84/GAINER DAM
SCITUATE AVENUE (ROUTE 12)
SCITUATE, RHODE ISLAND

BRIDGE STANDARD NOTES
SHEET 2

COMMONWEALTH ENGINEERS & CONSULTANTS, INC.
400 SMITH STREET
PROVIDENCE, RI 02908

CHECKED BY _____ DATE _____ SCALE NONE

0143B_V1_033_STDBRNOT002ADD01

\\10.0.0.0\0143-Kent Dam Spillway Bridge\Structural\Drawings_Current_Drawings\Grant Gain Option Dwgs\0143B_V1_033_STDBRNOT002ADD01.dwg 9/11/2013 10:40:13 AM bernardo.leite PDF-XChange Printer 2012, RBF

FED. ROAD DIV. NO.	STATE	FEDERAL AID PROJECT NO.	FISCAL YEAR	SHEET NO.	TOTAL SHEETS
–	RI		2013	47	53

R-1

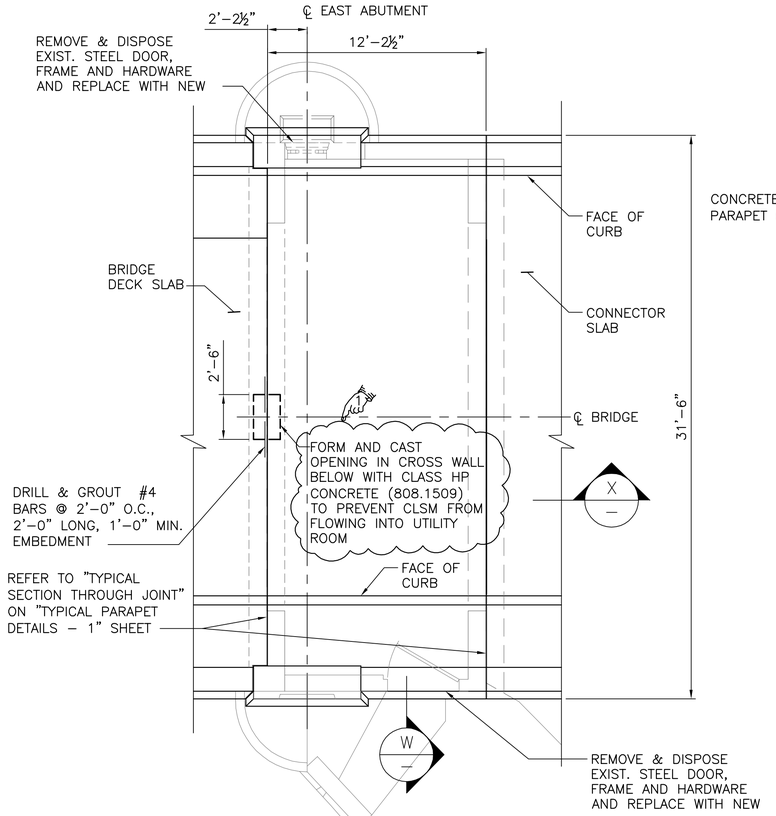

UTILITY ROOM DECK PLAN

SCALE:1/4"=1'-0"

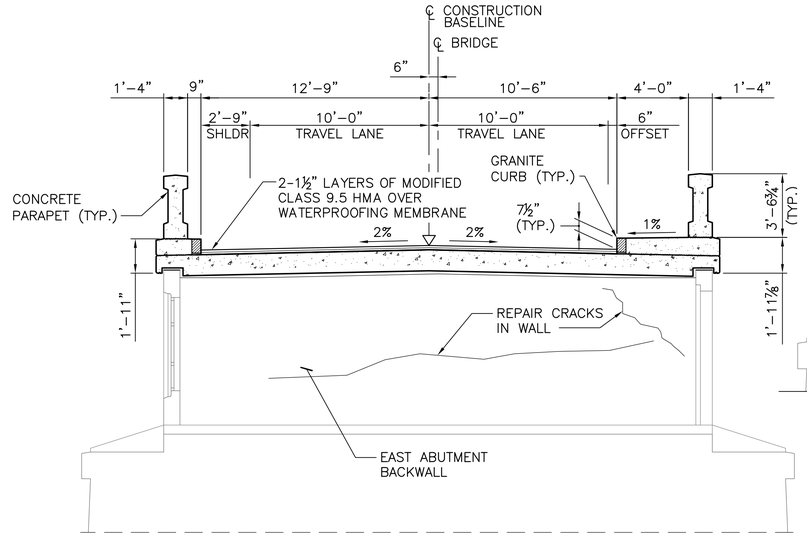

UTILITY ROOM SECTION (LOOKING EAST)

SCALE: ¼"=1'-0"

W
–

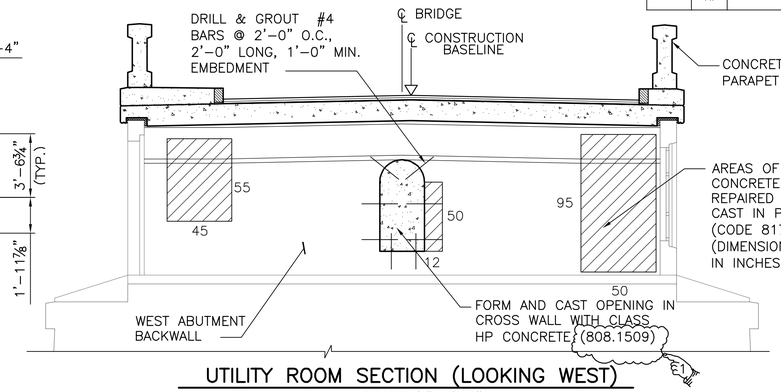

UTILITY ROOM SECTION (LOOKING WEST)

SCALE: ¼"=1'-0"

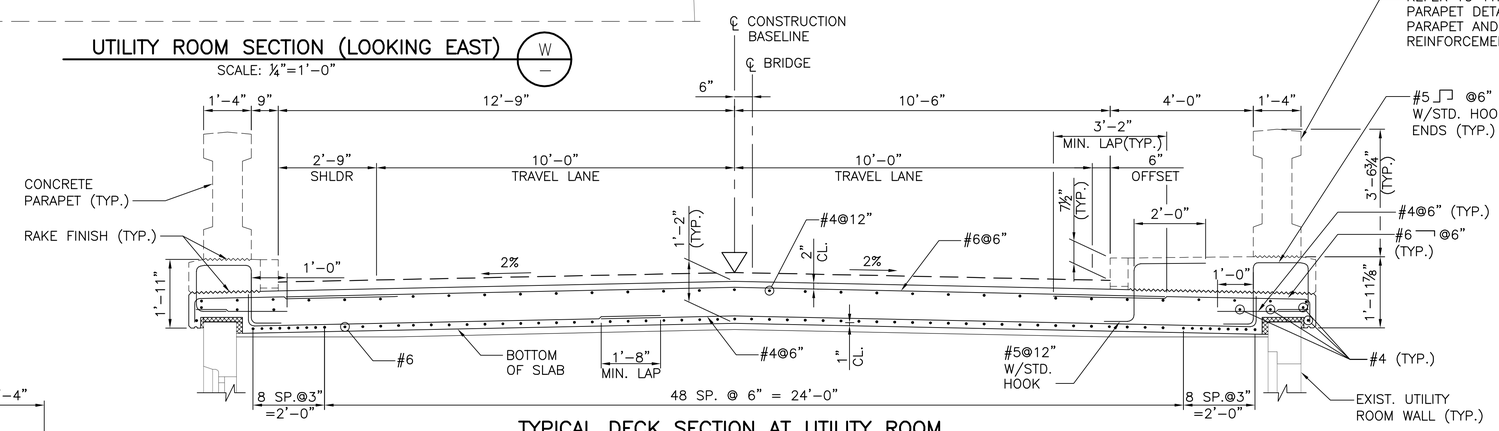

TYPICAL DECK SECTION AT UTILITY ROOM

SCALE: ½"=1'-0"

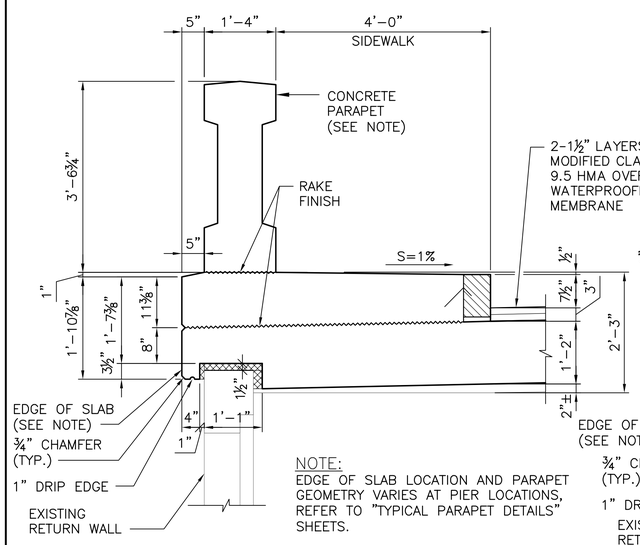

NOTE:
EDGE OF SLAB LOCATION AND PARAPET GEOMETRY VARIES AT PIER LOCATIONS, REFER TO "TYPICAL PARAPET DETAILS" SHEETS.

UTILITY ROOM SLAB DETAIL @ SIDEWALK

SCALE: ¾"=1'-0"

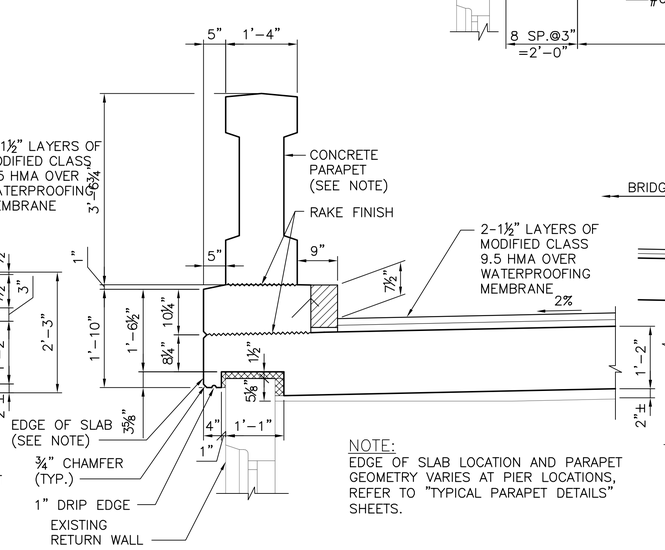

NOTE:
EDGE OF SLAB LOCATION AND PARAPET GEOMETRY VARIES AT PIER LOCATIONS, REFER TO "TYPICAL PARAPET DETAILS" SHEETS.

UTILITY ROOM SLAB DETAIL @ SAFETY CURB

SCALE: ¾"=1'-0"

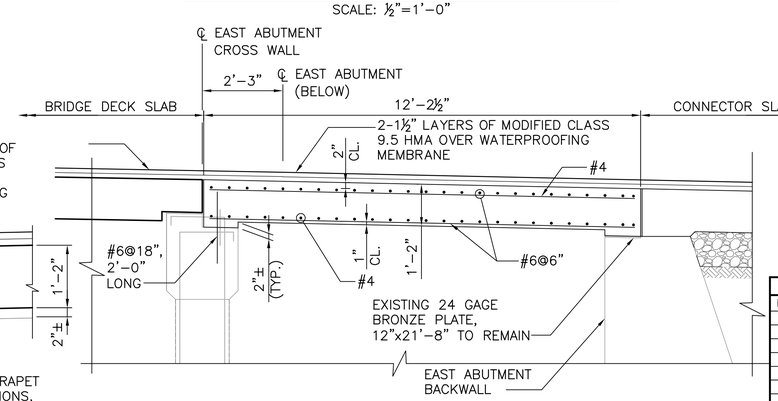

PROPOSED SECTION

SCALE: ½"=1'-0"

X
–

ADDENDUM No. 1

REVISIONS		
NO.	DATE	BY
1	9/11/13	WK

RHODE ISLAND
DEPARTMENT OF TRANSPORTATION

BRIDGE REHABILITATION/1R IMPROVEMENTS
KENT DAM SPILLWAY BRIDGE No. 84/GAINER DAM
SCITUATE AVENUE (ROUTE 12)
SCITUATE, RHODE ISLAND

UTILITY ROOM
PLAN AND DETAILS

CHECKED BY _____ DATE _____ SCALE AS SHOWN

COMMONWEALTH
ENGINEERS & CONSULTANTS, INC.
400 SMITH STREET
PROVIDENCE, RI 02908

0143B_V1_047_BTYPICAL007ADD01

FED. ROAD DIV. NO.	STATE	FEDERAL AID PROJECT NO.	FISCAL YEAR	SHEET NO.	TOTAL SHEETS
–	RI		2013	52	53

R-1

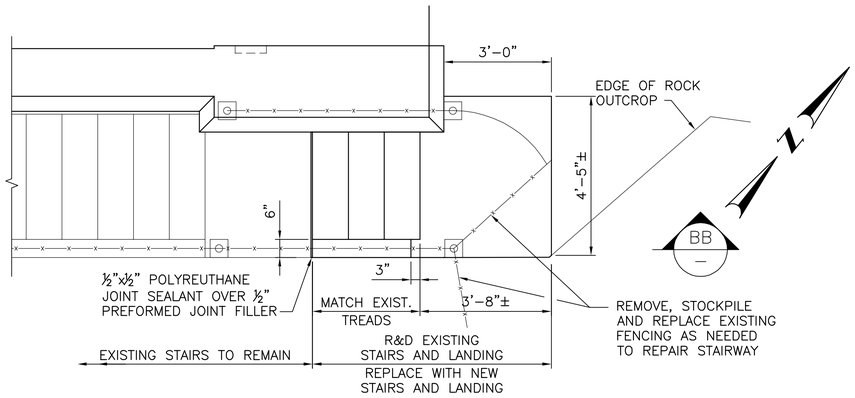

PLAN

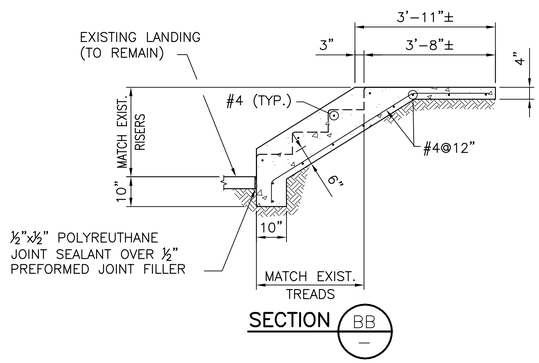

SECTION BB / –

STAIR REPLACEMENT DETAIL

SCALE: 1/2"=1'-0"

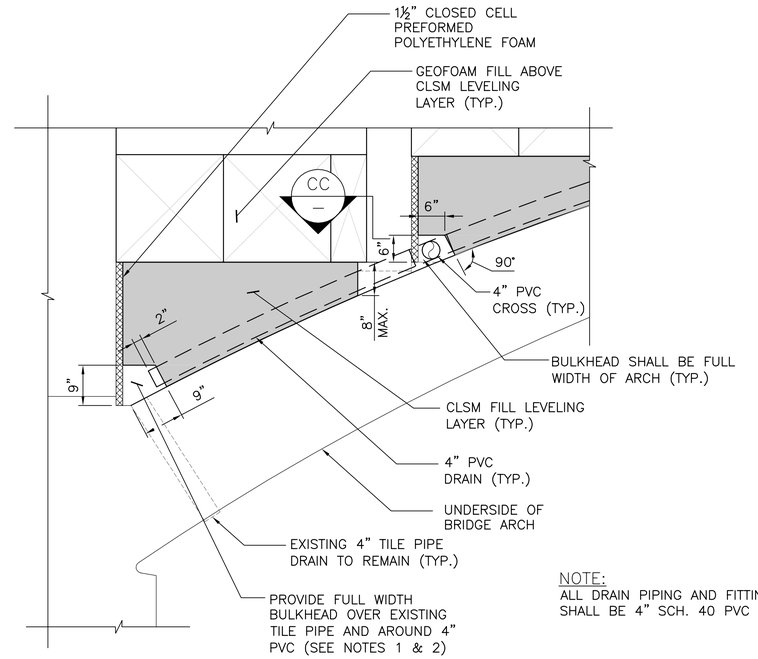

NOTE:
ALL DRAIN PIPING AND FITTINGS SHALL BE 4" SCH. 40 PVC

TYPICAL PVC DRAIN SYSTEM DETAIL

SCALE: ¾"=1'-0"

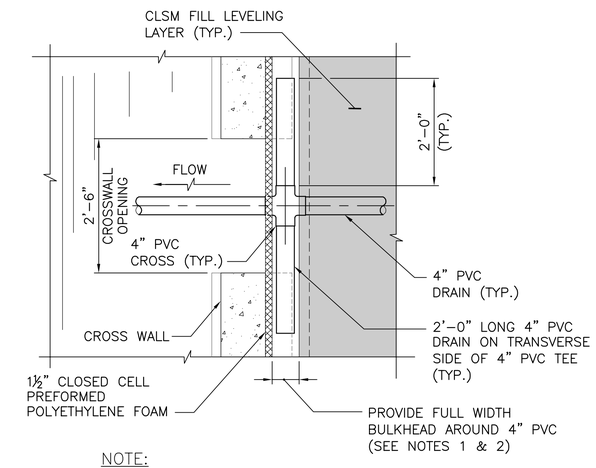

NOTE:
GEOFOAM FILL NOT SHOWN FOR CLARITY.

TYPICAL PVC DRAIN SYSTEM PLAN

SCALE: ¾"=1'-0"

CC / –

PVC DRAIN NOTES:

1. SEAL AROUND BULKHEAD AND PVC PIPE WITH JOINT SEALANT TO ENSURE GOOD SEAL.
2. CONTRACTOR SHALL SUBMIT DETAILS AND DESIGN CALCULATION FOR THE PROPOSED BULKHEAD FOR REVIEW AND APPROVAL PRIOR TO THE START OF WORK. THE BULKHEAD SHALL BE DESIGNED TO WITHSTAND ALL ANTICIPATED CONSTRUCTION LOADING IN ADDITION TO LOADING FROM CLSM.
3. PVC DRAIN SYSTEM SHALL BE IN ACCORDANCE WITH RELEVANT PROVISIONS OF SECTION 829 OF THE STANDARD SPECIFICATIONS.
4. THE SEAL, BULKHEAD, AND ASSOCIATED DESIGN SHALL BE CONSIDERED INCIDENTAL TO AND INCLUDED IN THE COST OFF THE CLSM.

ADDENDUM No. 1

REVISIONS		
NO.	DATE	BY
1	9/11/13	WK

RHODE ISLAND
DEPARTMENT OF TRANSPORTATION

BRIDGE REHABILITATION/1R IMPROVEMENTS
KENT DAM SPILLWAY BRIDGE No. 84/GAINER DAM
SCITUATE AVENUE (ROUTE 12)
SCITUATE, RHODE ISLAND

MISCELLANEOUS DETAILS - 1

COMMONWEALTH ENGINEERS & CONSULTANTS, INC.
400 SMITH STREET
PROVIDENCE, RI 02908

CHECKED BY _____ DATE _____ SCALE AS SHOWN

0143B_V1_052_MISCDTLS001ADD01