August 21, 2013

STATE OF RHODE ISLAND AND PROVIDENCE PLANTATION
DEPARTMENT OF ADMINISTRATION

DIVISION OF PURCHASES BID NO. 1

RHODE ISLAND DEPARTMENT OF TRANSPORTATION

RHODE ISLAND CONTRACT NO.2013-CB-106

FEDERAL-AID PROJECT NO. FAP Nos: STP-0731(001)

High Priority Repairs to Lawton Bridge No. 731

Girder A at both abutments

CITY/TOWN OF Cranston

COUNTY OF PROVIDENCE

NOTICE TO PROSPECTIVE BIDDERS

ADDENDUM NO. 1 Prospective bidders and all concerned are hereby notified of the following changes in the Plans, Specifications, Proposal and Distribution of Quantities for this contract. These changes shall be incorporated in the Plans, Specifications, Proposal and Distribution of Quantities, and shall become an integral part of the Contract Documents.

A. Contract Dates

1. Bid-Opening Date

   The Bid-Opening Date is changed to 08/30/2013 at 11:30 am.

B. Drawings/Plans - Change/Addition

1. Original Plans

   The original plans for Lawton Bridge No. 731 were not included on the advertising CD.

RI Department of Transportation
Chief Engineer

FED. ROAD DIV. NO.	STATE	FED. AID PROJ. NO.	FISCAL YEAR	SHEET NO.	TOTAL SHEETS
1	R.I.	I-295-3(123)2		8-10	95

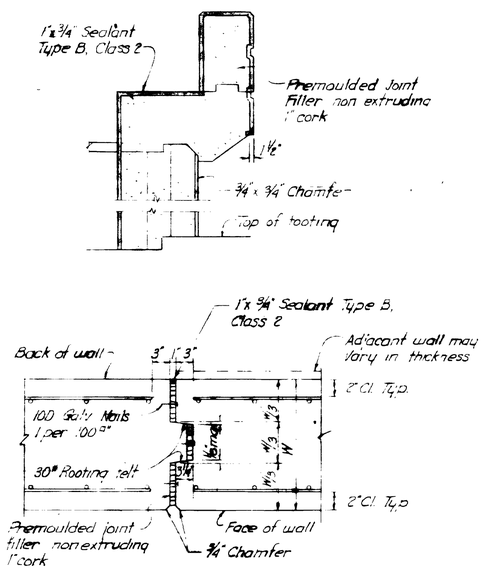

EXPANSION JOINT IN WALL

DETAIL 43

NOT TO SCALE

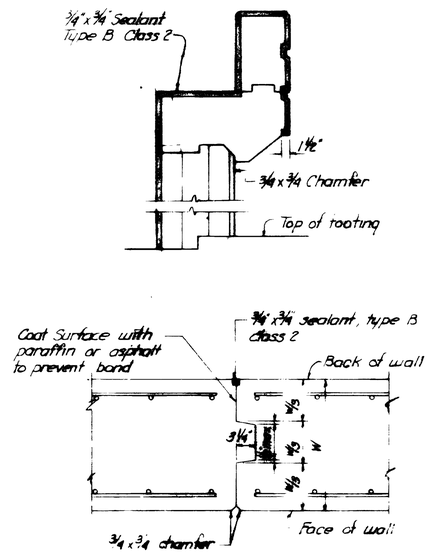

CONTRACTION JOINT IN WALL

DETAIL 44

NOT TO SCALE

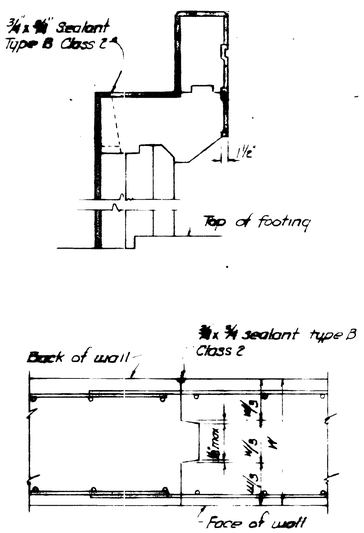

CONSTRUCTION JOINT IN WALL

DETAIL 45

NOT TO SCALE

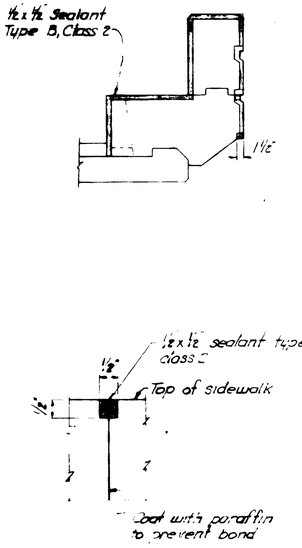

CONTRACTION JOINT ON STRUCTURE

DETAIL 46

NOT TO SCALE

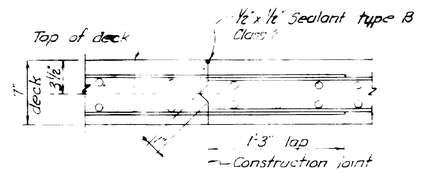

CONSTRUCTION JOINT IN DECK SLAB

DETAIL 47

SCALE 1 1/2" = 1'-0"

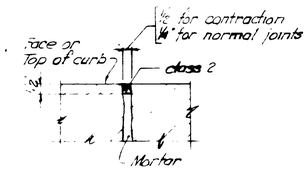

SECTION 29-29

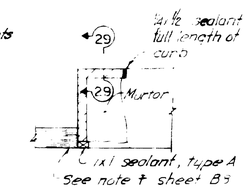

SEALANT IN VERTICAL CURB

DETAIL 48

NOT TO SCALE

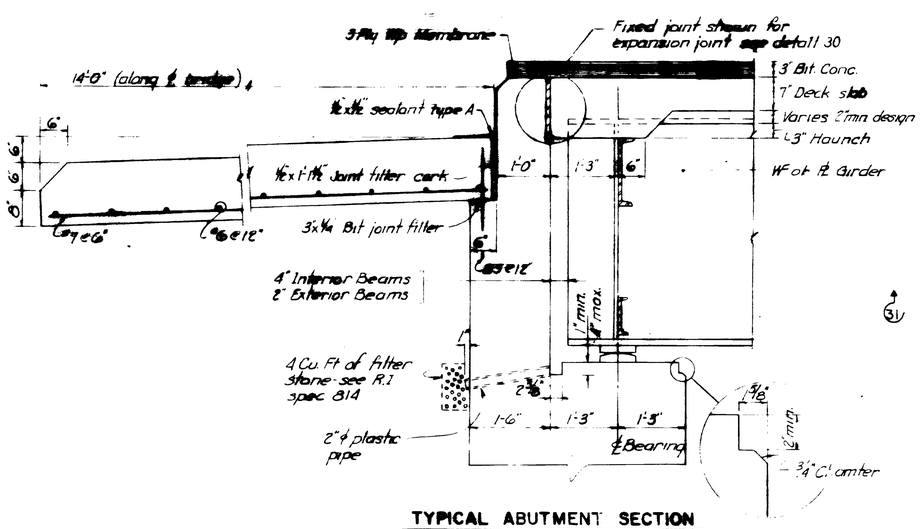

TYPICAL ABUTMENT SECTION

DETAIL 49

SCALE 3/4" = 1'-0"

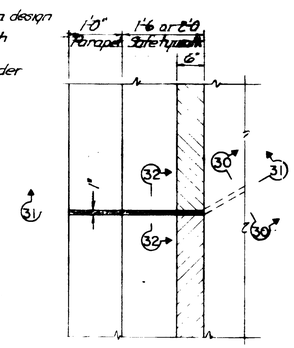

PLAN

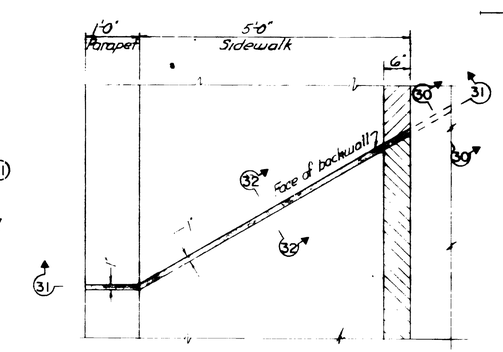

PLAN

FIXED JOINT AT ABUTMENT

DETAIL 50

SCALE 3/4" = 1'-0"

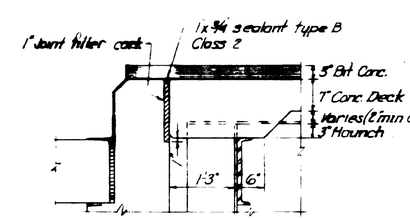

SECTION 30-30

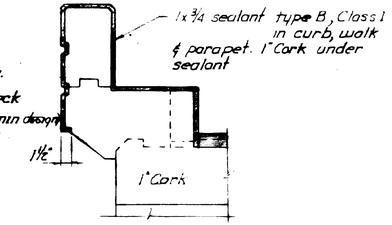

SECTION 31-31

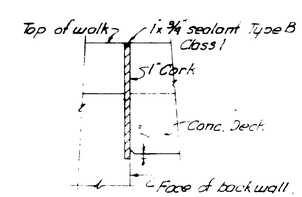

SECTION 32-32

REVISIONS		
NO.	DATE	BY

RHODE ISLAND
DEPARTMENT OF PUBLIC WORKS
DIVISION OF ROADS AND BRIDGES

INTERSTATE ROUTE 295

RALPHS POND TO SCITUATE AVENUE (C)

CRANSTON RHODE ISLAND

STANDARD DETAILS
43 TO 50

CHARLES A. MAGUIRE & ASSOCIATES
ENGINEERS
PROVIDENCE, R. I. BOSTON, MASS.

DATE March, 1967 DESIGNED BY
SCALE
EXCEPT AS NOTED SHEET B-10 OF 95

APPROVED _____ SUPERVISING CIVIL ENGINEER (BRIDGE)
APPROVED _____ CHIEF ENGINEER
FINAL DATE

SET NO. ____ PRINTED
ISSUED TO

FED. ROAD DIV. NO.	STATE	FED. AID PROJ. NO.	FISCAL YEAR	SHEET NO.	TOTAL SHEETS
1	R.I.	I-295-5(23)32		B-2	95

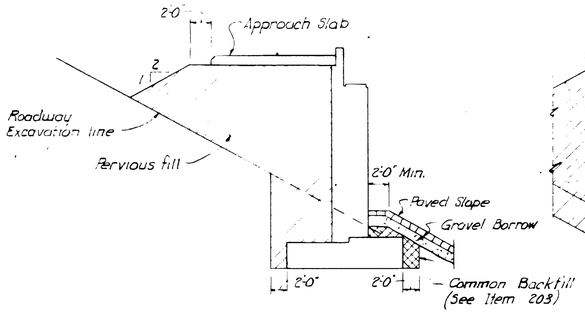

ABUTMENT IN CUT

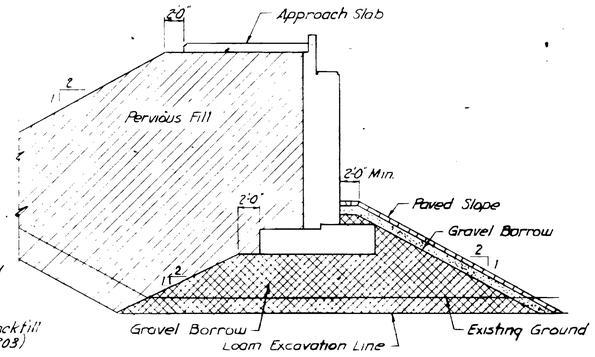

ABUTMENT IN FILL

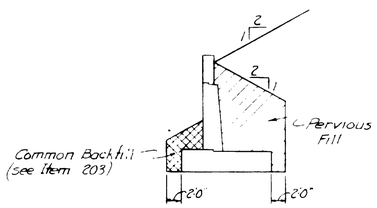

WALL IN CUT

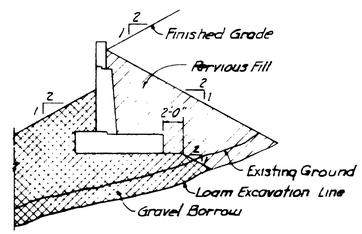

WALL ON FILL

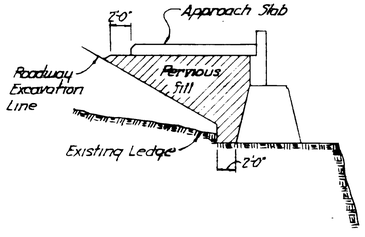

ABUTMENT IN ROCK CUT

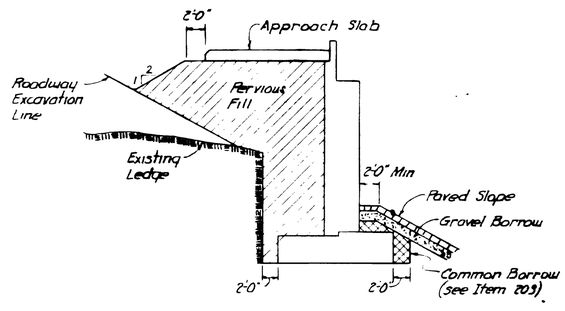

ABUTMENT IN ROCK CUT

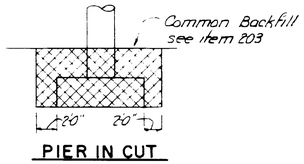

PIER IN CUT

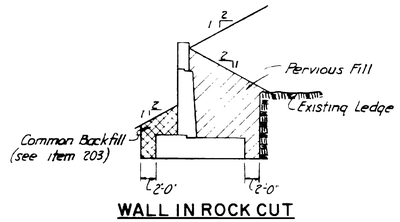

WALL IN ROCK CUT

PAYMENT LINES FOR GRAVEL BORROW & PERVIOUS FILL

DETAIL 1

NOT TO SCALE

GENERAL STEEL NOTES

1. Structural steel shapes and plates shall conform to the latest provisions of ASTM Designation A36 and ASTM Designation A441.

2. Connections shall be riveted, welded or made with high tensile bolts as shown on the plans. For field connections of secondary members, high tensile bolts, rivets or welds may be substituted for the method shown on the plans provided the entire connection is fabricated by one method only subject to approval of the Engineer.

3. All welding shall conform to the current "Specifications for Welded Highway and Railway Bridges, Design, Construction and Repair" of the American Welding Society 1966 Edition.

4. All rivets shall conform to the latest provisions of ASTM Designation A141.

5. All corrosion resisting steel shall conform to the current provisions of ASTM Designation A242.

6. For camber information see the steel details in the individual sets of bridge plans.

7. For sizes and location of anchor bolts see pier and abutment drawings. Location of anchor bolts shall be verified in the field before fabrication of bearing assemblies.

8. Shop drawings for all fabricated steel and falsework shall be submitted to the Engineer in sufficient time to permit careful checking.

9. The top surface of the upper flanges of the plate girders or wide flange stringers shall be free of paint, oil or any other impurities that would in any way reduce the bond of the concrete to the steel. All painting shall be in accordance with the specification..

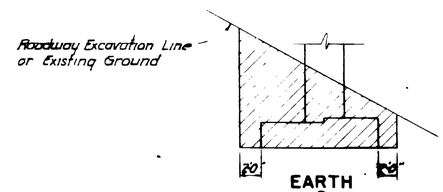

EARTH & UNCLASSIFIED

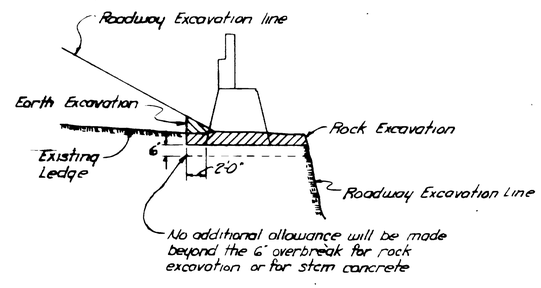

ROCK

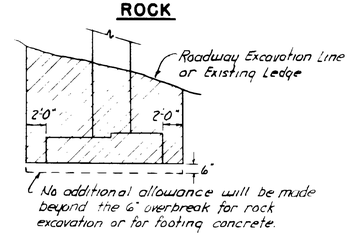

ROCK

PAYMENT LINES FOR STRUCTURE EXCAVATION

DETAIL 2

NOT TO SCALE

GENERAL CONCRETE NOTES

1. Classes of concrete shall be: X, XX, A, AA, AA(AE), B, B(AE), C & D all as described in Table (1) & (2) under Section 600 Portland Cement Concrete of the Specifications for Road and Bridge Construction State of Rhode Island. For classes of concrete used see individual bridge quantities.

2. Air-entraining portland cement concrete shall be provided as required and shall be designated by a symbol (AE) following the class of concrete.

3. The allowable working stresses for portland cement concrete and reinforcing steel shall be as required by the Standard Specifications for Highway Bridges, AASHO latest revisions.
   A. The (f'c) minimum compressive strength at 28 days, for class X shall be 5,000 psi and the fc shall be 0.4f'c=2,000 psi.
   B. The (f'c) for class XX shall be 3,200 psi and the fc shall be 0.4f'c=1,280 psi
   C. The (f'c) for classes A, AA and B with or without air-entrainment shall be 3,000 psi and the fc shall be 0.4f'c=1,200 psi.
   D. The (f'c) for class C shall be 2,400 psi and the fc shall be 0.4f'c=960 psi.
   E. The (f'c) for class D shall be 2,000 psi and the fc shall be 0.4f'c=800 psi.
   F. Reinforcing steel to be intermediate grade billet steel bars, ASTM Designation A15, allowable tensile stress of 20,000 psi and deformations shall conform to the latest ASTM Designation A305.

4. Unless otherwise shown on the plans all reinforcing in the bottom of beams, girders and footing slabs and in walls, columns and haunches shall be lapped 20 diameters and the bars near the top of beams and girders and footing slabs having more than 12" of concrete under the bars shall be lapped 35 diameters, to make a splice.

   In deck slabs all bars to be lapped 20 diameters. Top bars to be spliced at center of spans between stringers. Bottom bars to be spliced over supports.

5. All reinforcing bars shall have the following minimum cover:
   A. Footings all bars 3".
   B. Slabs-top bars 1½" and bottom bars 1".
   C. All other bars 2".

6. All anchor bolts, anchor rods, etc. shall be galvanized in a manner approved by the Engineer, or metalized in a manner approved by the Engineer. Such approval does not relieve the Contractor of the responsibility to prevent concrete stains or discolorations. Any concrete stains or discolorations shall be removed by the Contractor.

7. Horizontal construction joints other than those shown on the plans or as authorized by the Engineer will not be permitted.

8. All exposed concrete surfaces visible in elevation shall be rubbed in accordance with the specifications. This shall include all exposed surfaces to one foot below ground line. The work shall include also the underside of the deck slab and nosings from the edge of the nosing to the fascia beam. Top of sidewalk shall have float finish to provide an even non-skid surface.

9. All exposed edges and re-entrant corners not otherwise detailed shall have a minimum ¾" chamfer. End posts shall be dressed with square corners.

10. All joint filler to be premolded, non-expansive type, non-extruding.

11. All joint sealant to be type B (polysulfide base) except as noted.

12. Color of Type B joint Sealant where exposed in sidewalk and curb to be neutral (light tan or grey). Under pavement color to be black. Sealant on back surface of walls etc. color to be at the discretion of the Contractor.

13. Polymer Emulsion Treatment will cover all exposed concrete surfaces in the median and safetywalk, or sidewalk areas including the interior face and top of all railing parapets. It will also include the top of all beam seats except where there is a completely fixed joint in the deck above.

NOTES:

1. Cross hatched area indicates limits for payment
2. Footings shall not be founded partly upon rock and partly upon earth. When this situation occurs, rock shall be removed to a depth of 12 inches below the under side of the footing and shall be replaced with compacted gravel borrow conforming to Section 203.02.2 of the Standard Specifications. Payment for earth cushion shall be made under Item 203.06 "Fill Gravel Borrow under Structure"

REVISIONS		
NO.	DATE	BY

RHODE ISLAND
DEPARTMENT OF PUBLIC WORKS
DIVISION OF ROADS AND BRIDGES

INTERSTATE ROUTE 295

RALPHS POND TO SCITUATE AVENUE (C)

CRANSTON RHODE ISLAND

STANDARD DETAILS
1 & 2

CHARLES A. MAGUIRE & ASSOCIATES
ENGINEERS
PROVIDENCE, R. I. BOSTON, MASS.
DATE March, 1967 DESIGNED BY
SCALE
EXCEPT AS NOTED SHEET B-2 OF 95

APPROVED _____ SUPERVISING CIVIL ENGINEER (BRIDGE)
APPROVED _____ CHIEF ENGINEER
FINAL DATE

SET NO.
PRINTED
ISSUED TO

FED. ROAD DIV. NO.	STATE	FED. AID PROJ. NO.	FISCAL YEAR	SHEET NO.	TOTAL SHEETS
1	R.I.	I-295-5(23)32		B-3	95

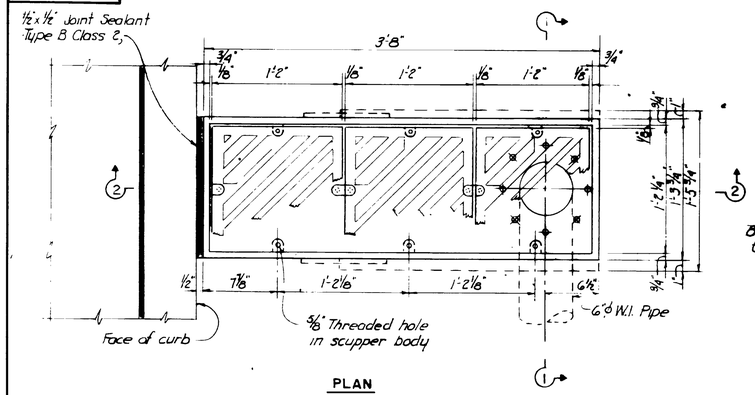

PLAN

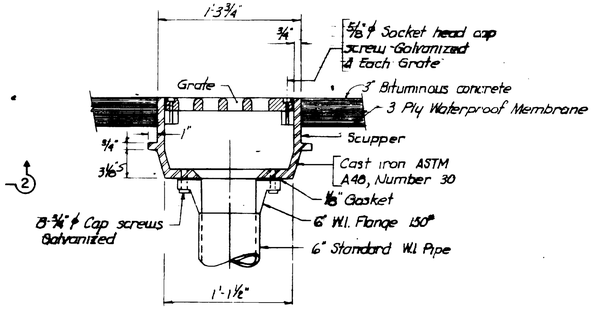

SECTION 1-1

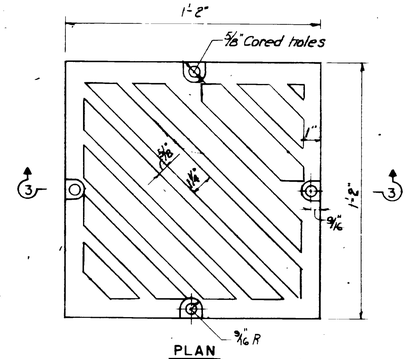

PLAN

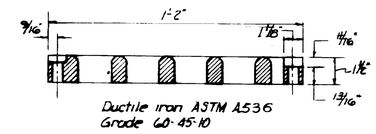

SECTION 3-3

SCUPPER GRATING

DETAIL 4

SCALE: 3" = 1'-0"

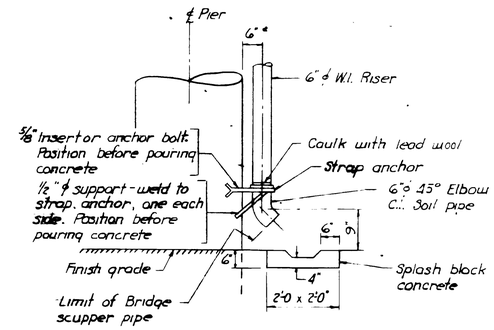

6" SCUPPER DRAIN & SPLASH BLOCK

DETAIL 5

SCALE: 1/2" = 1'-0"

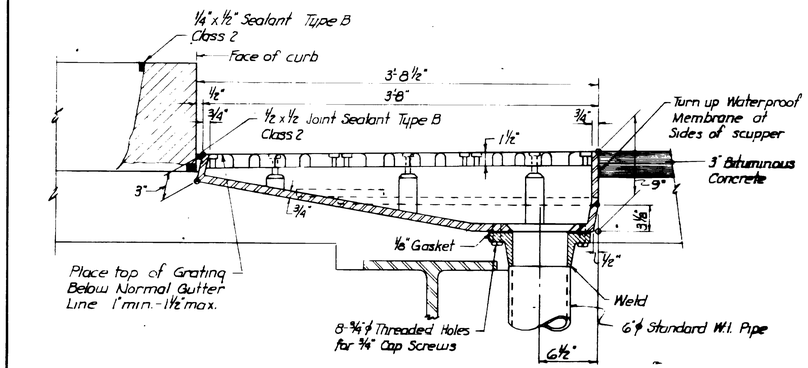

SECTION 2-2

3 SECTION SCUPPER

DETAIL 3

SCALE 1 1/2" = 1'-0"

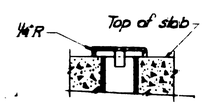

SECTION 4-4

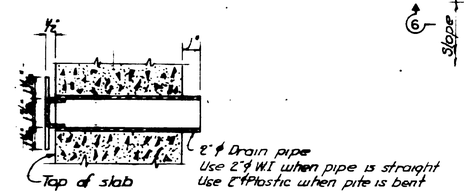

SECTION 5-5

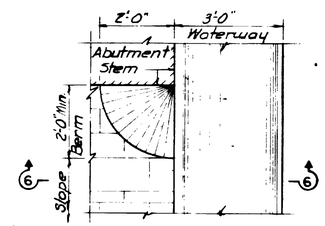

PLAN

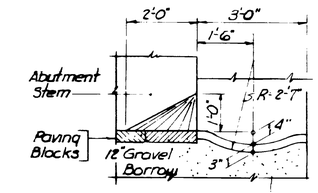

SECTION 6-6

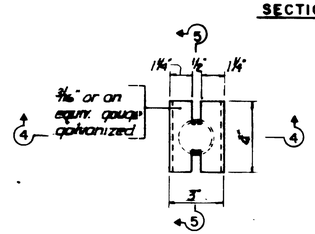

PLAN

DECK DRAIN

DETAIL 8

SCALE 3" = 1'-0"

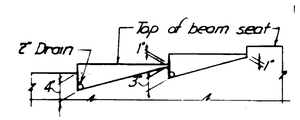

DRAIN AT ABUTMENT BEAM SEAT

DETAIL 9

NOT TO SCALE

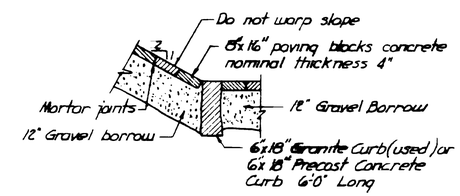

CURB AT BOTTOM OF PAVED SLOPE

PAVED SLOPE & WATERWAY

DETAIL 10

NOT TO SCALE

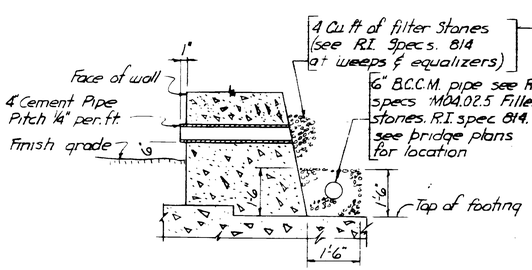

WEEP & WALL DRAIN

DETAIL 6

NOT TO SCALE

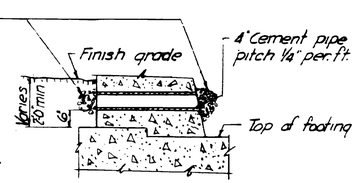

EQUALIZER

DETAIL 7

NOT TO SCALE

REVISIONS		
NO.	DATE	BY

RHODE ISLAND
DEPARTMENT OF PUBLIC WORKS
DIVISION OF ROADS AND BRIDGES

INTERSTATE ROUTE 295
RALPHS POND TO SCITUATE AVENUE (C)
CRANSTON RHODE ISLAND

STANDARD DETAILS
3 TO 10

CHARLES A. MAGUIRE & ASSOCIATES
ENGINEERS
PROVIDENCE, R. I. BOSTON, MASS.
DATE March, 1967 DESIGNED BY
SCALE
EXCEPT AS NOTED SHEET B-3 OF 95

APPROVED _____ SUPERVISING CIVIL ENGINEER (BRIDGE)
APPROVED _____ CHIEF ENGINEER
FINAL DATE

SET NO.
PRINTED
ISSUED TO

FED. ROAD DIV. NO.	STATE	FED. AID PROJ. NO.	FISCAL YEAR	SHEET NO.	TOTAL SHEETS
1	R. I.	S-295-S(23)32		B-6	95

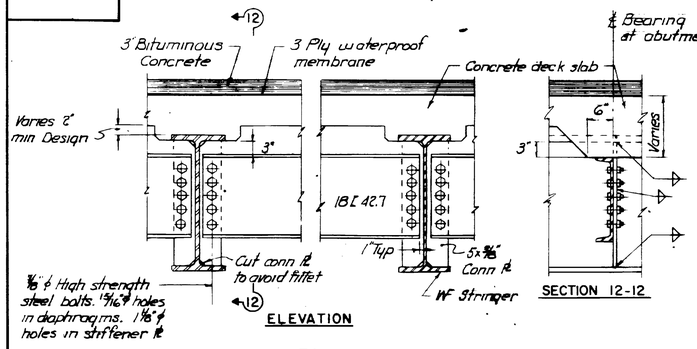

D1

END DIAPHRAGM FOR WIDE FLANGE STRINGERS

DETAIL 21

NOT TO SCALE

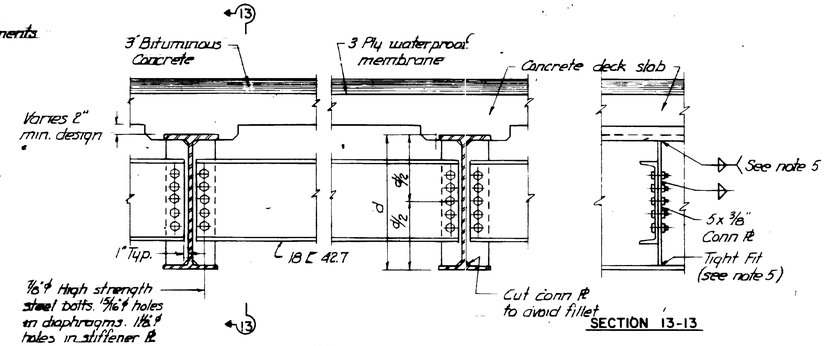

D2

INTERMEDIATE DIAPHRAGM FOR WIDE FLANGE STRINGERS

DETAIL 22

NOT TO SCALE

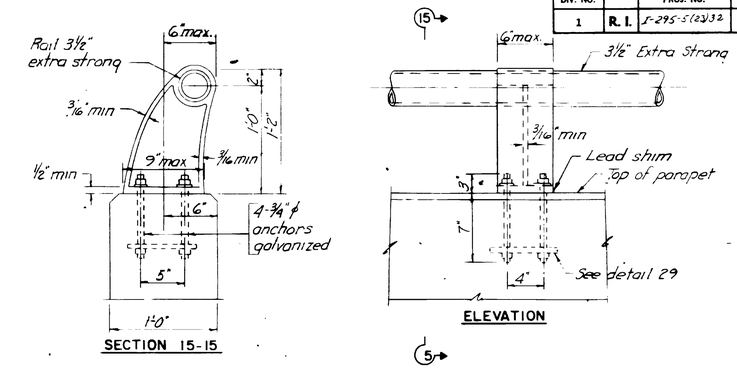

ROADWAY RAILING

(TRAFFIC RAILING)

DETAIL 27

SCALE 1 1/2"=1'-0"

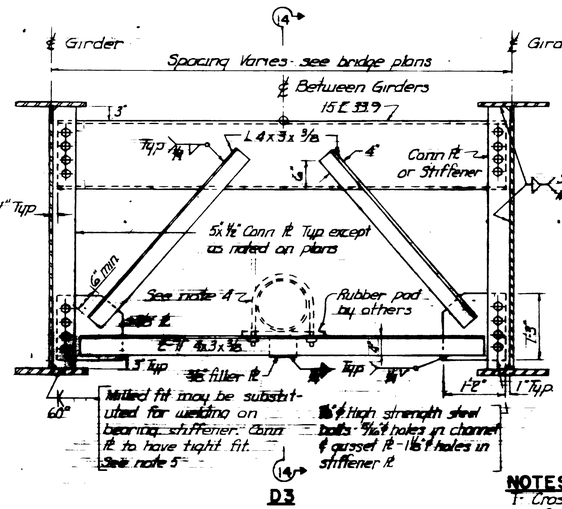

D3

END DIAPHRAGM FOR ∠ GIRDERS

UTILITY DIAPHRAGM

DETAIL 23

NOT TO SCALE

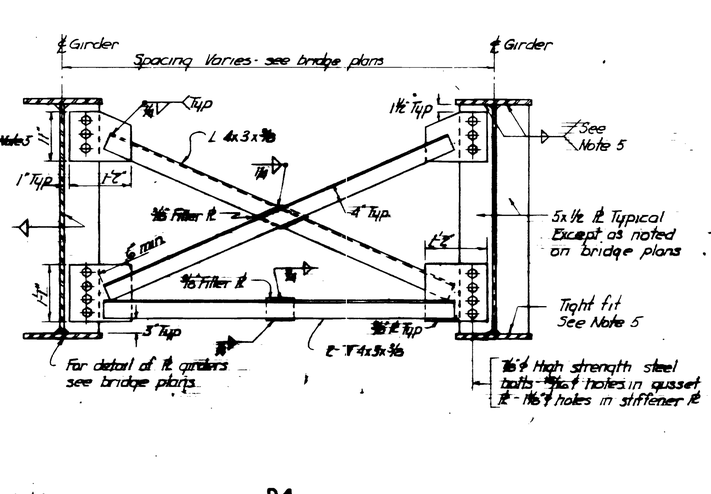

D4

INTERMEDIATE DIAPHRAGM FOR ∠ GIRDERS

DETAIL 24

NOT TO SCALE

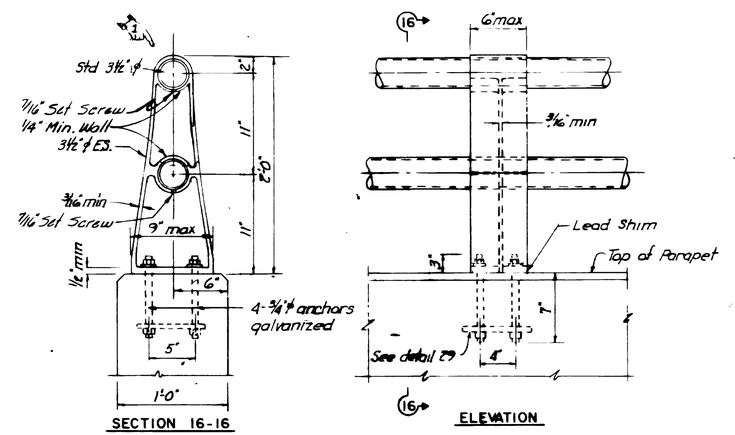

SIDEWALK RAILING

(COMBINATION RAILING)

DETAIL 28

SCALE 1 1/2"=1'-0"

NOTES:

1. Cross frames are to follow cross pitch of road
2. All diaphragms & connection plates shall be A.S.T.M. designation A 36
3. See welding chart this sheet for size of welds not indicated.
4. Pipe and 5/8" ϕ U bolts not in contract. Contractor shall provide holes in angles. See bridge plans for location and size
5. On continuous girders see individual bridge details for location of weld and tight fit.

Material thickness of Thicker part joined Inches	Minimum size of Fillet weld Inches
0" to 1/4"	Thickness of ∠
Over 1/4" to 3/4"	1/4"
Over 3/4" to 1 1/2"	5/16"
Over 1 1/2" to 2 1/4"	3/8"

This chart applies if not shown otherwise on structural details

WELDING CHART

DETAIL 25

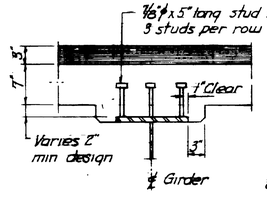

NOTE:

1. Stud shear connectors to be placed parallel to deck reinforcement
2. Detail does not apply to Aqueduct Bridge. See bridge plans

SHEAR CONNECTOR

DETAIL 26

NOT TO SCALE

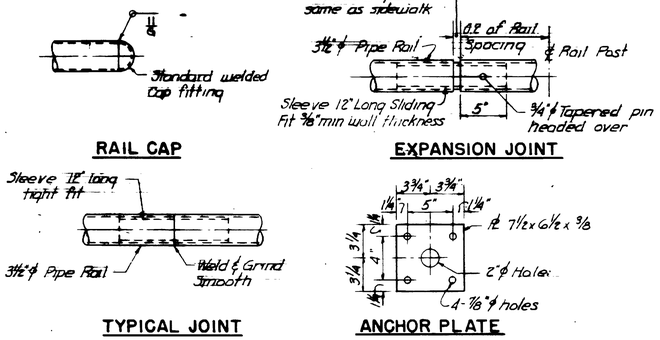

MISCELLANEOUS RAIL DETAILS

DETAIL 29

SCALE 1 1/2"=1'-0"

NOTES:

Rails - 3 1/2" Pipe
Posts - Steel casting
Malleable iron casting
Fabricated
Anchor Bolts
All steel railing elements to be galvanized in accordance with AASHO designation M-111 and painted as required under item 809.05.12
Provide a temporary 3/8" Plywood leveling plate for each post anchorage

ASTM

A-53, Grade B
A 27, Grade 60-30
A 47, Grade 35018
A 36, Plates
A 36

REVISIONS		
NO.	DATE	BY
1	10-4-67	RC

RHODE ISLAND
DEPARTMENT OF PUBLIC WORKS
DIVISION OF ROADS AND BRIDGES

INTERSTATE ROUTE 295

RALPHS POND TO SCITUATE AVENUE (C)

CRANSTON RHODE ISLAND

STANDARD DETAILS
21 TO 29

CHARLES A. MAGUIRE & ASSOCIATES
ENGINEERS
PROVIDENCE, R. I. BOSTON, MASS.
DATE March, 1967 DESIGNED BY
SCALE
EXCEPT AS NOTED SHEET B-6 OF 95

APPROVED _____ SUPERVISING CIVIL ENGINEER (BRIDGE)
APPROVED _____ CHIEF ENGINEER
FINAL DATE

SET NO.
PRINTED
ISSUED TO

FED. ROAD DIV. NO.	STATE	FED. AID PROJ. NO.	FISCAL YEAR	SHEET NO.	TOTAL SHEETS
1	R.I.	I-295-5(23)32		B-7	95

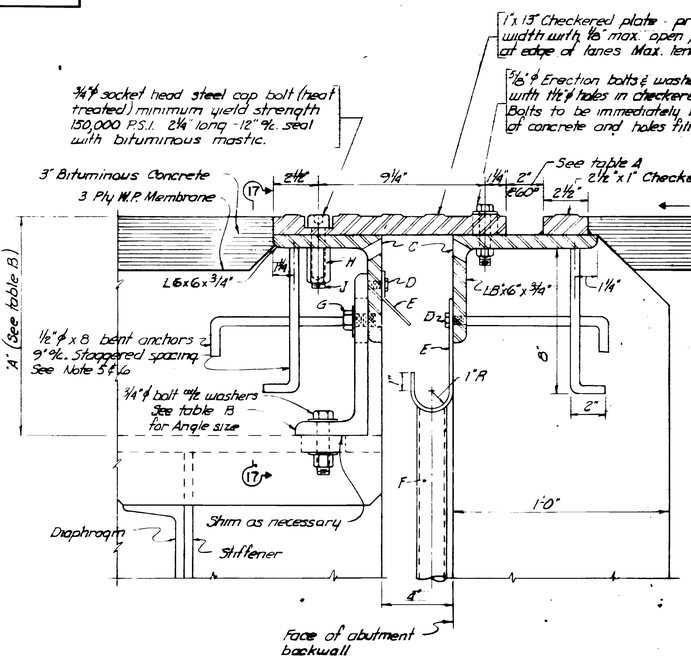

TYPICAL SECTION OF EXPANSION PLATE IN ROADWAY AT ABUTMENT

DETAIL 30

SCALE: 3" = 1'-0"

LEGEND:

C 3/4"ϕ Vent holes 18" ℄.
D 1/2"ϕ Hex. head bronze bolts at 12" ℄.
E 7/16" W.I. Plate A.S.T.M. A42 8% min. transverse elongation in 8".
F 1 1/2" I.D. Std. W.I. Pipe A.S.T.M. designation A72.
G 3/4" Cap screw & washer
H Elongated nut - see detail for Alternate scheme.
J 3/4"ϕ Threaded plug 3/4" long.

NOTES:

1. Entire unit to be assembled, erected and set to grade before pouring concrete.
2. All material to be galvanized or metalized except checkered plates and bolts used for erection. If metalizing is used the metal coating shall be applied to surfaces not in contact with concrete.
3. Top surface of checkered plates shall be painted as required under item 809 paint for materials.
4. All structural shapes shall conform to A.S.T.M. designation A36.
5. Bent stud anchors shall be welded by pressure process.
6. Headed stud anchors may be substituted for bent stud anchors.
7. For joint sealants and joint fillers see sheet B.10
8. For beams, girders and diaphragms see bridge plans.
9. For size of welds see chart on sheet B.6
10. Extend 1 1/2"ϕ pipe from trough to 1" below the top of 3" plastic pipe inserted in the abutment.
11. 2 1/2" x 1" Plate to be placed on both sides of all joints.
12. Downspout to be located 12" square off inside edge of bottom flange of fascia girder.

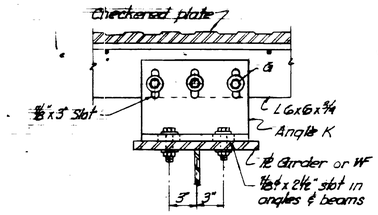

SECTION 17-17

SCALE 1 1/2" = 1'-0"

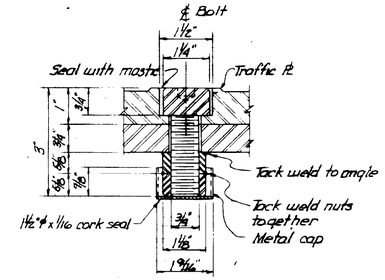

ALTERNATE BOLT

HALF SCALE

TABLE A FOR SETTING PLATES

Temp.	Span Length 60'	120'	175'
30°	2 1/8"	2 1/4"	2 3/8"
45°	2 1/16"	2 1/8"	2 3/16"
60°	2"	2"	2"
75°	1 15/16"	1 7/8"	1 13/16"
90°	1 7/8"	1 3/4"	1 5/8"

TABLE B

Dimension A	Angle "K" 12" Long
9" to 9 1/2"	L 6 x 4 x 3/4
Over 9 1/2 to 10 1/2	L 7 x 4 x 3/4
Over 10 1/2 to 11 1/2	L 8 x 4 x 3/4
Over 11 1/2 to 12 1/2	L 9 x 4 x 3/4

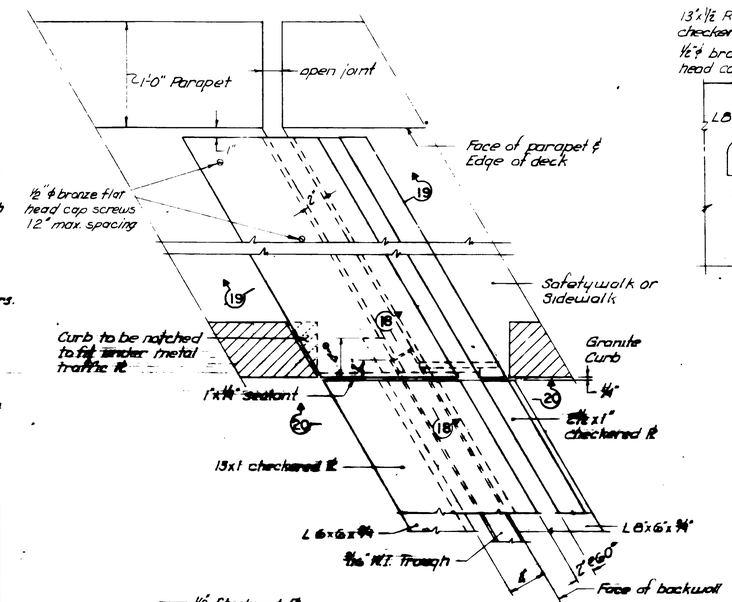

PLAN AT CURB

DETAIL 32

SCALE 1 1/2" = 1'-0"

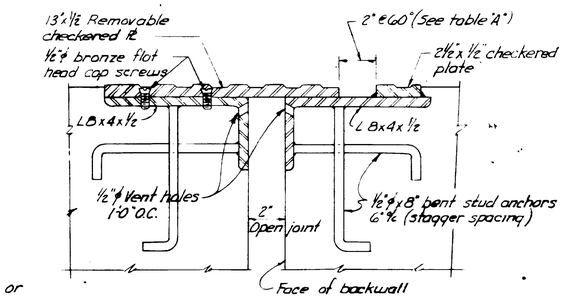

SECTION 19-19

SCALE 3" = 1'-0"

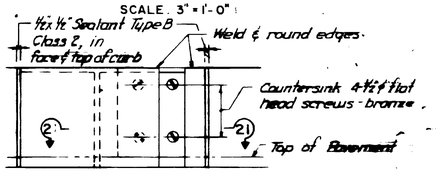

SECTION 20-20

SCALE 1 1/2" = 1'-0"

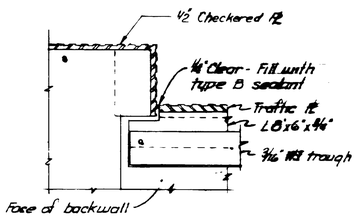

SECTION 18-18

SCALE 1" = 1'-0"

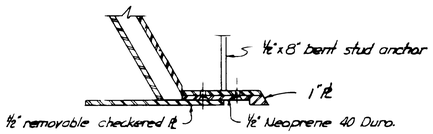

SECTION 21-21

SCALE 1 1/2" = 1'-0"

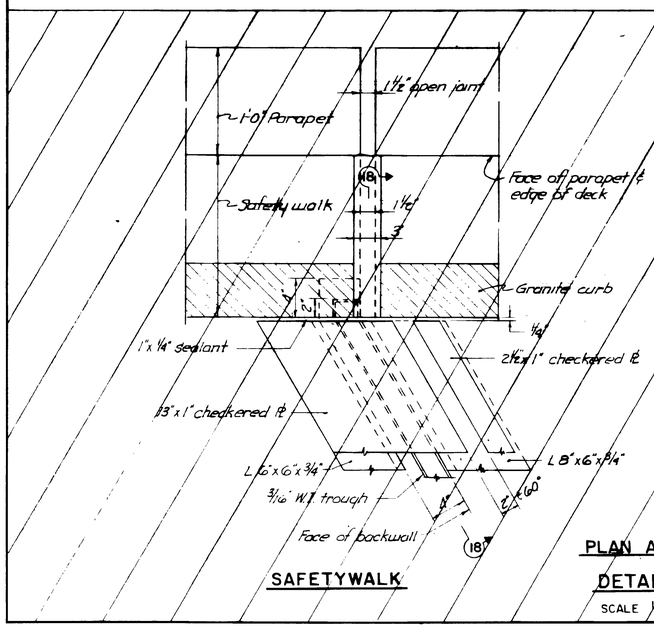

SAFETYWALK

PLAN AT CURB

DETAIL 31

SCALE 1/2" = 1'-0"

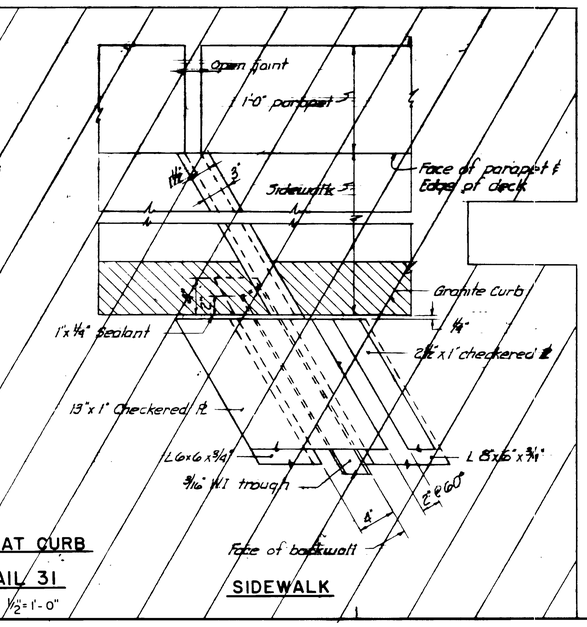

SIDEWALK

REVISIONS		
NO.	DATE	BY
1	12-12-67	R.C.

RHODE ISLAND
DEPARTMENT OF PUBLIC WORKS
DIVISION OF ROADS AND BRIDGES

INTERSTATE ROUTE 295

RALPHS POND TO SCITUATE AVENUE (C)

CRANSTON RHODE ISLAND

STANDARD DETAILS
30 TO 32

CHARLES A. MAGUIRE & ASSOCIATES
ENGINEERS
PROVIDENCE, R. I. BOSTON, MASS.

DATE March, 1967 DESIGNED BY
SCALE
EXCEPT AS NOTED SHEET B-7 OF 95

APPROVED _____ SUPERVISING CIVIL ENGINEER (BRIDGE)
APPROVED _____ CHIEF ENGINEER
FINAL DATE

SET NO.
PRINTED
ISSUED TO

FED. ROAD DIV. NO.	STATE	FED. AID PROJ. NO.	FISCAL YEAR	SHEET NO.	TOTAL SHEETS
1	R. I.	I-295-5(23)32		B-8	95

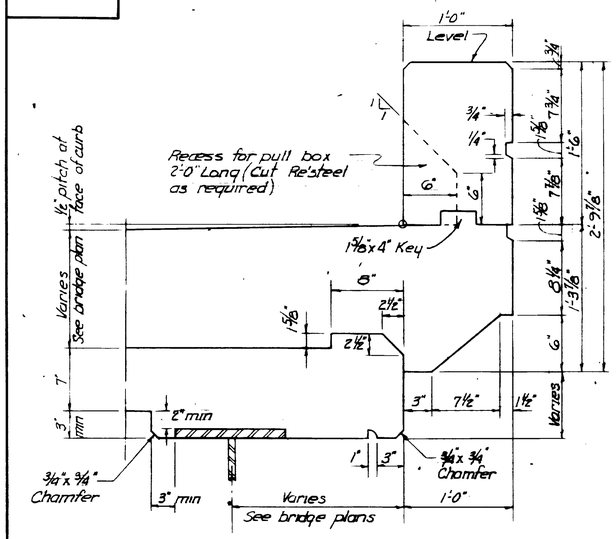

NOSING AND PARAPET DIMENSIONS

DETAIL 33

SCALE 1½" = 1'-0"

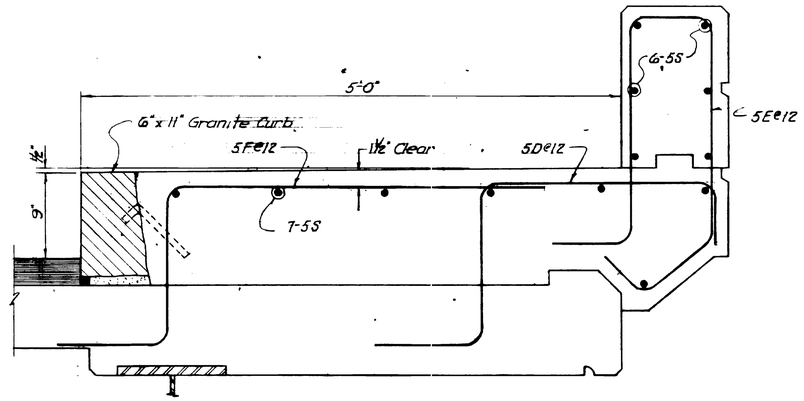

SIDEWALK REINFORCEMENT

DETAIL 34

SCALE 1½" = 1'-0"

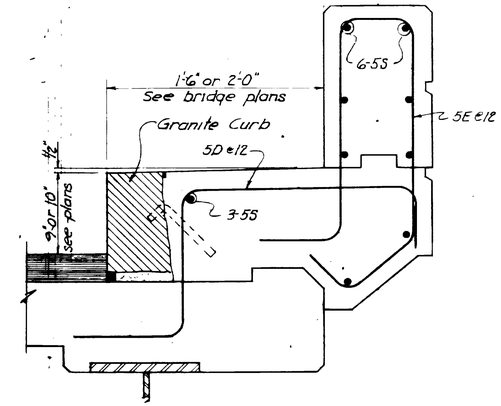

SAFETYWALK REINFORCEMENT

DETAIL 35

SCALE 1½" = 1'-0"

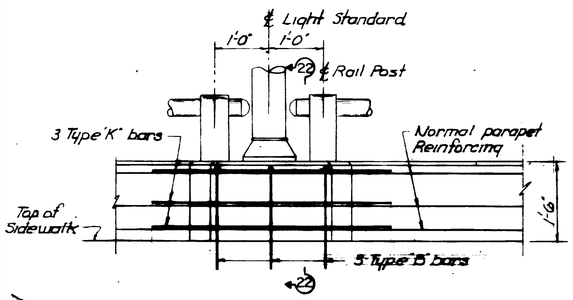

ELEVATION

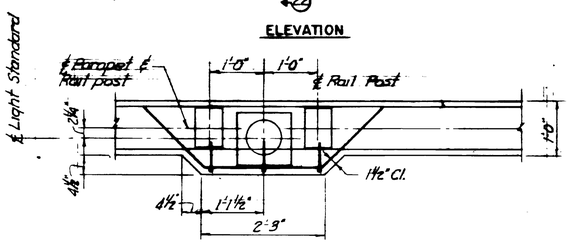

PLAN

REINFORCEMENT AT LIGHT STANDARD

DETAIL 36

SCALE 3/4" = 1'-0"

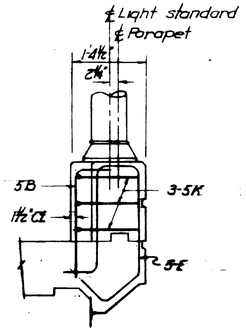

SECTION 22-22

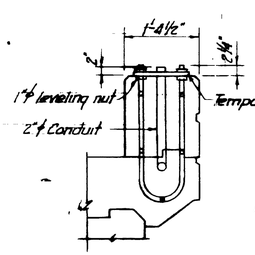

SECTION AT LIGHT STANDARD

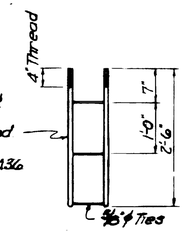

SIDE VIEW OF LIGHT ANCHOR

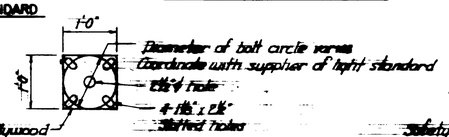

LEVELING PLATE

ANCHORAGE FOR LIGHT STANDARD

DETAIL 37

SCALE 3/4" = 1'-0"

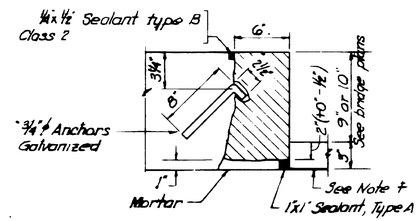

SECTION THRU VERTICAL CURB

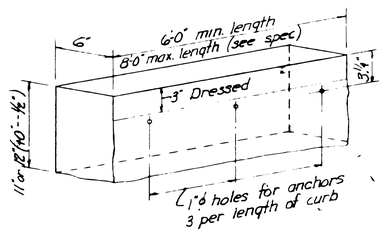

VERTICAL FACED CURB

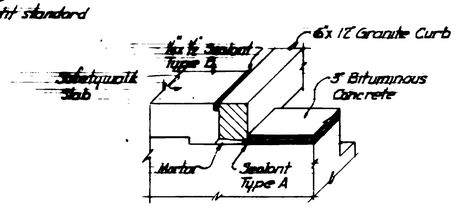

6" X 12 VERTICAL CURB AT BACKWALL

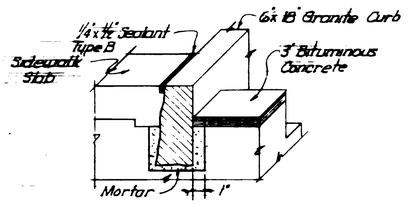

6" X 18" VERTICAL CURB AT BACKWALL

GRANITE CURB

DETAIL 38

NOT TO SCALE

NOTE

‡ 3 ply glass fabric asphaltic mopped waterproofing. See section 815 of standard specifications.

REVISIONS		
NO.	DATE	BY

RHODE ISLAND
DEPARTMENT OF PUBLIC WORKS
DIVISION OF ROADS AND BRIDGES

INTERSTATE ROUTE 295

RALPHS POND TO SCITUATE AVENUE (C)

CRANSTON — RHODE ISLAND

STANDARD DETAILS
33 TO 38

CHARLES A. MAGUIRE & ASSOCIATES
ENGINEERS
PROVIDENCE, R. I. — BOSTON, MASS.

DATE March, 1967 — DESIGNED BY
SCALE
EXCEPT AS NOTED — SHEET B-8 OF 95

APPROVED _____ SUPERVISING CIVIL ENGINEER (BRIDGE)
APPROVED _____ CHIEF ENGINEER
FINAL DATE

SET NO. ____
PRINTED ____
ISSUED TO ____

FED. ROAD DIV. NO.	STATE	FED. AID PROJ. NO.	FISCAL YEAR	SHEET NO.	TOTAL SHEETS
1	R. I.	I-295-5(23)32		B-9	95

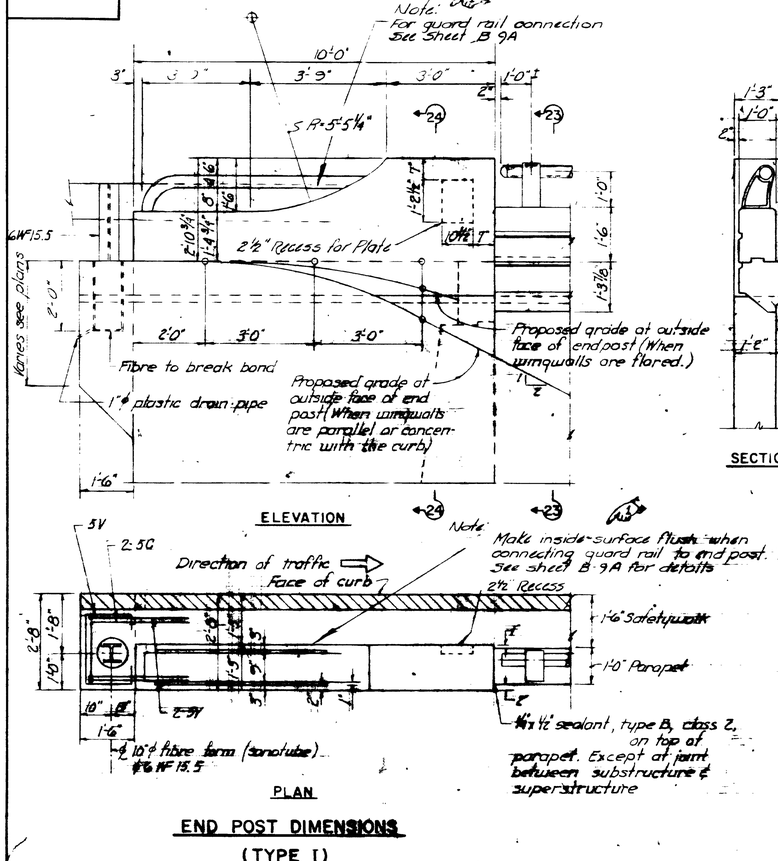

END POST DIMENSIONS
(TYPE I)
DETAIL 39
SCALE 1/2" = 1'-0"

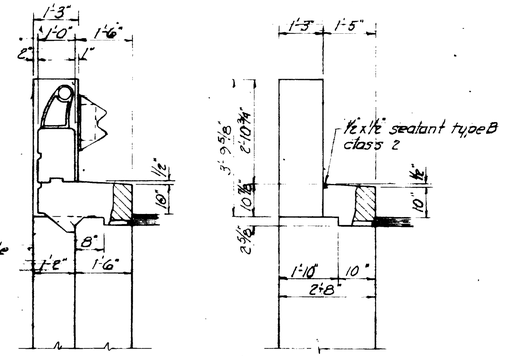

SECTION 23-23

SECTION 24-24

NOTE:

1. Highway guard rail anchorage at bridge structure to be use at end of end post either left or right, in the direction of traffic.
2. Guard rail and post are not bridge items

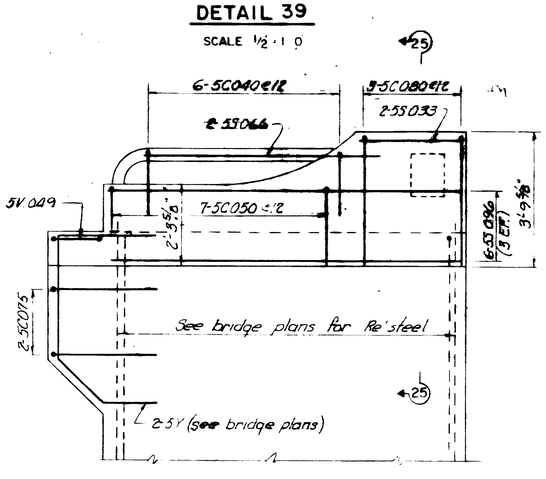

END POST REINFORCEMENT
(TYPE I)
DETAIL 40
SCALE 1/2" = 1'-0"

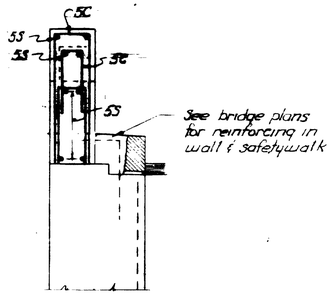

SECTION 25-25

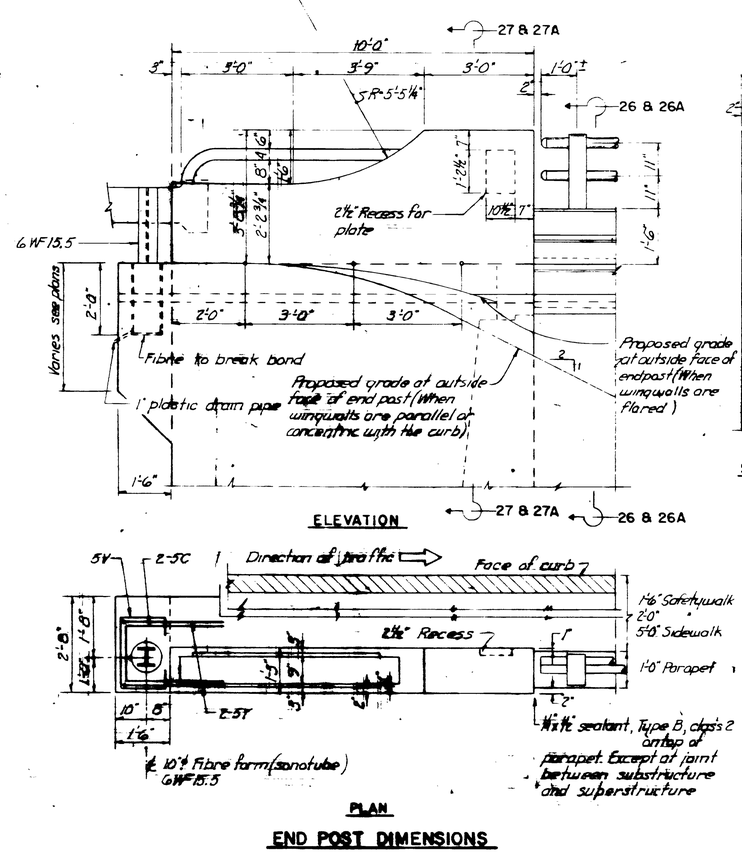

END POST DIMENSIONS
(TYPE II)
DETAIL 41
SCALE 1/2" = 1'-0"

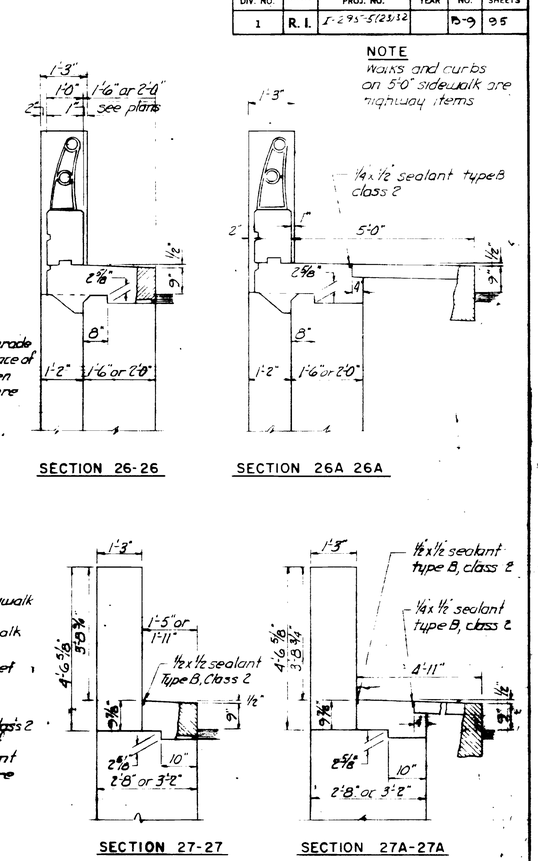

SECTION 26-26

SECTION 26A-26A

SECTION 27-27

SECTION 27A-27A

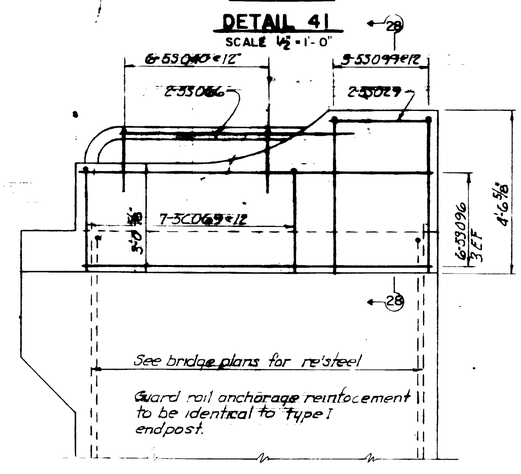

END POST REINFORCEMENT
(TYPE II)
DETAIL 42
SCALE 1/2" = 1'-0"

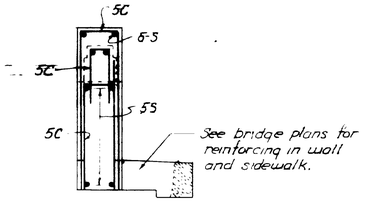

SECTION 28-28

REVISIONS		
NO.	DATE	BY

RHODE ISLAND
DEPARTMENT OF PUBLIC WORKS
DIVISION OF ROADS AND BRIDGES

INTERSTATE ROUTE 295
RALPHS POND TO SCITUATE AVENUE (C)
CRANSTON RHODE ISLAND

STANDARD DETAILS
39 TO 42

CHARLES A. MAGUIRE & ASSOCIATES
ENGINEERS
PROVIDENCE, R. I. BOSTON, MASS.
DATE March, 1967 DESIGNED BY
SCALE
EXCEPT AS NOTED SHEET B-9 OF 95

APPROVED _____ SUPERVISING CIVIL ENGINEER (BRIDGE)
APPROVED _____ CHIEF ENGINEER
FINAL DATE

SET NO.
PRINTED
ISSUED TO

731,001

FED. ROAD DIV. NO.	STATE	FED. AID PROJ. No.	FISCAL YEAR	SHEET NO.	TOTAL SHEETS
1	R. I.	[redacted]		B-77	95

SUBLIST OF DRAWINGS

B-77	Title Sheet
B-78	General Plan & Sections
B-79	Location Plan
B-80	Foundation & Utility Plan
B-81	West Abutment Sheet 1
B-82	West Abutment Sheet 2
B-83	Pier
B-84	East Abutment Sheet 1
B-85	East Abutment Sheet 2
B-86	Wingwalls
B-87	Framing & Deck Grade Plans
B-88	Steel Details Sheet 1
B-89	Steel Details Sheet 2
B-90	Deck Reinforcing
B-91	Sidewalk Reinforcing
B-92	Reinforcing Schedule Sheet 1
B-93	Reinforcing Schedule Sheet 2
B-94	Boring Logs
B-95	Boring Logs

STATE OF RHODE ISLAND
DEPARTMENT OF PUBLIC WORKS
DIVISION OF ROADS AND BRIDGES

PLAN, PROFILE AND SECTIONS OF PROPOSED
STATE HIGHWAY

INTERSTATE ROUTE 295
LAWTON BRIDGE
CRANSTON, RHODE ISLAND

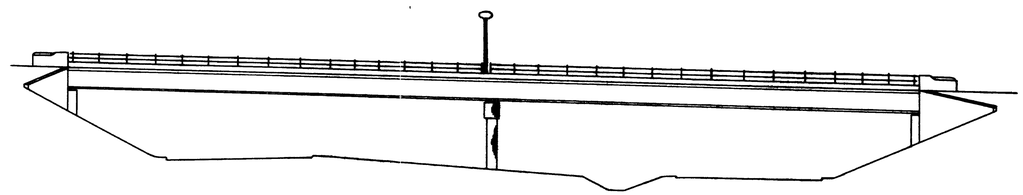

ELEVATION
SCALE: 1"=20'

BRIDGE NO. 731
LAWTON BRIDGE
FEDERAL AID NO. I-295-5 (23) 32

GENERAL NOTES

1. All construction indicated on these plans shall be in accordance with the State of Rhode Island Standard Specifications for Road and Bridge Construction, dated 1965; the Standard Specifications for Highway Bridges of the American Association of State Highway Officials, dated 1961; including all later revisions and the Specifications accompanying these plans. In case of conflict the Special Provisions of the Specifications accompanying these plans shall govern. (see para. 105.04 stand. specs.)

2. Dimensions, stations and elevations are shown to the nearest one hundreth of a foot or one eighth of an inch except structural steel dimensions are to the nearest one sixteenth of an inch.

3. All elevations are referenced to [redacted].

4. Angles are shown to the nearest second.

5. All footings shall be approved by the Engineer as to dimensions, elevations and suitability of foundation material before placing of concrete.

6. All working points are shown on the centerline of bearing on abutments and on the centerline of piers. Layout of stringers is also given on the centerline of bearing on abutments and on the centerline of the piers.

7. All pier elevations are drawn looking toward increasing stations. All abutments and walls are drawn looking at the exposed faces.

8. Lettered sections and details are shown in the individual sets of bridge plans. Numbered sections and details are shown on the Standard Detail sheets.

9. For Bench Marks and Ties see Highway Plan 13 & 14.

DESIGN DATA

LOADING:
In accordance with the Specifications of the American Association of State Highway Officials for [redacted]20-44 Loading 1961 Edition, Interstate Military Load and/or Rhode Island Legal Load.

STRESSES:

Structural Steel-ASTM Designation A36	fs=20,000 psi
ASTM Designation A441	fs=23,000 to 27,000 psi
Reinforcing Steel-ASTM Designation A15 & A305	fs=20,000 psi
Concrete-Classes AA(AE), B & B(AE)	f'c= 3,000 psi

FOUNDATION:
Maximum allowable soil bearing capacity 5.0 KSF

CONVENTIONAL SIGNS

STATE LINE
COUNTY LINE
TOWN LINE
CITY LINE
CENTER LINE
HIGHWAY LINE
EDGE OF PAVEMENT
EDGE OF TRAVELED WAY
MONUMENTS (PROJECT)
BENCH MARK — B.M. No. 9
ELECTRIC RAILWAY
STEAM RAILWAY
FENCE (GENERAL)
FENCE (WOODEN)
FENCE (WITH STONE POSTS)
FENCE (CHAIN LINK)
STONE WALL
MONUMENTS
RETAINING WALL (REINFORCED CONCRETE)
GUESTRAINING WALL (REINFORCED MASONRY)
TREES
HEDGE
COBBLE GUTTER
BRIDGE

PIPE CULVERT (IN PLAN)
PIPE CULVERT (IN PROFILE)
BOX CULVERT (IN PLAN)
BOX CULVERT (IN PROFILE)
STONE CULVERT (IN PLAN)
STONE CULVERT (IN PROFILE)
MANHOLE
HYDRANT (SURFACE)
HYDRANT (BURIED)
CATCH BASIN
STREAM
DITCH
POND
LEDGE
BOULDER
WATER OR GAS GATE — W.G. G.G.
TEL. POLE
BUILDINGS
CEMETERY
FUEL DOCK
BRUSH
SWEEP DOCK
SWAMP

BRIDGE QUANTITIES

ITEM	UNIT	QUANTITY
SUPERSTRUCTURE:		
Situminous Concrete Pavement Type I-1 Std.	Tons.	173
Superstructure Concrete Class AA(AE)(1½") Bridge Deck	C.Y.	265
Superstructure Concrete Class AA(AE)(1½") Bridge Sidewalks	C.Y.	66
Superstructure Concrete Class AA(AE)(1½") Parapets	C.Y.	26
Joint Sealer(Poured & Caulked) Type A	C.I.	5,593
Joint Sealer(Poured & Caulked) Type B	C.I.	2,209
Concrete Surface Finishing Rubbed Reg.	S.F.	4,540
Standard Bars Intermediate Grade	Lbs.	116,800
A-36 Steel (built-up)	Lbs.	227,500
A-441 Steel (built-up)	Lbs.	110,600
Metal Expansion Joint Tread Plates	Lbs.	13,000
Sliding Bearings Std. Expansion	Ea.	12
Sliding Bearings Fixed Companion	Ea.	6
Welded Stud Shear Connectors ⅞"	Ea.	4,302
Steel Bridge Rail 2 Bar	L.F.	467
Sub-Pavement Drains	Ea.	4
Vert. Face Granite Curb Straight 9" Reveal	L.F.	467
Deck Scupper (Triple)	Ea.	2
Concrete Surface Treatment (Polymer Emulsion)	S.F.	2,448
Waterproofing Membrane	S.Y.	1,140

ITEM	UNIT	QUANTITY
SUBSTRUCTURE:		
Paved Waterways 3" Class A	S.Y.	38
Conc. Substructure Class AA(AE)(1½") Wall [redacted]		
Endposts	C.Y.	10
Concrete Substructure Class B(1½") Footings	C.Y.	181
Concrete Substructure Class B(1½") Walls	C.Y.	38
Concrete Substructure Class B(1½") Abutment	C.Y.	255
Concrete Substructure Class B(1½") Approach Slab	C.Y.	52
Framed Structure Conc. Cl.B(AE)(1½") Pier Col and Caps	C.Y.	46
Preformed Joint Filler Cork ½"	S.F.	97
Preformed Joint Filler Cork 1"	S.F.	42
Joint Sealer (Poured & Caulked) Type A	C.I.	552
Joint Sealer (Poured & Caulked) Type B	C.I.	946
Preformed Joint Filler Bitumnious ½"	S.F.	23
Concrete Surface Finishing Rubbed Reg.	S.F.	3,168
Standard Bars Intermediate Grade	Lbs.	46,800
Spirals , Std.	Lbs.	11[redacted]
Weep Holes	L.F.	35
Vertical Face Granite Curb-Straight 9" Reveal	L.F.	32
Conc. Surface Treatment (Polymer Emulsion)	S.F.	526
Sloped Pavement Adjacent to Structures	S.Y.	284
Structure Excavation Unclassified	C.Y.	206
Fill Gravel Borrow under Structures	C.Y.	770
Pervious Fill	C.Y.	3,171

BASE OF LEVELS
MEAN SEA LEVEL
EL.=0.00

R. I. DEPARTMENT OF PUBLIC WORKS
DIVISION OF ROADS AND BRIDGES

APPROVED

CHIEF ENGINEER — DATE

APPROVED

PUBLIC WORKS CONTROLLER — DATE

APPROVED

DIRECTOR — DATE

DEPARTMENT OF COMMERCE
BUREAU OF PUBLIC ROADS

APPROVED

DIVISION ENGINEER — DATE

Contract Number 6778
Number of Sheet B-77
Total Sheets 95

731,002

FED. ROAD DIV. NO.	STATE	FED. AID PROJ. NO.	FISCAL YEAR	SHEET NO.	TOTAL SHEETS
1	R. I.	I295-5(23)32		8-29	95

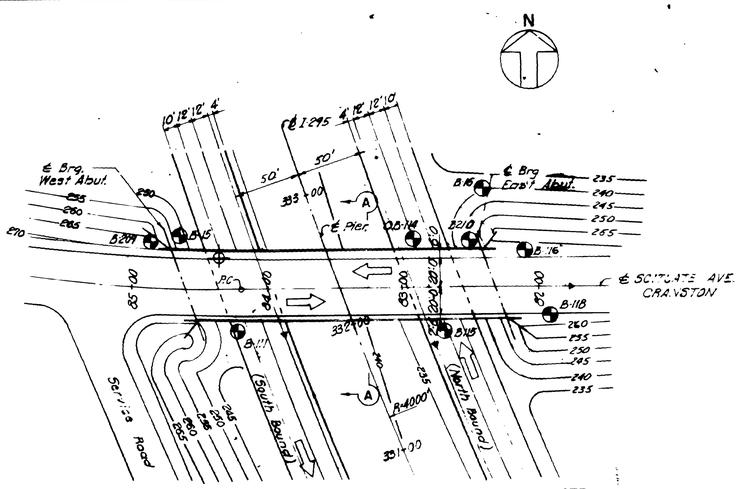

PLAN

SCALE: 1" = 50'

NOTE:
1- ⊕ Indicates point of minimum vertical clearance.

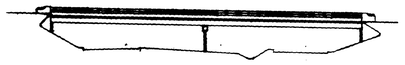

ELEVATION

SCALE: 1" = 50'

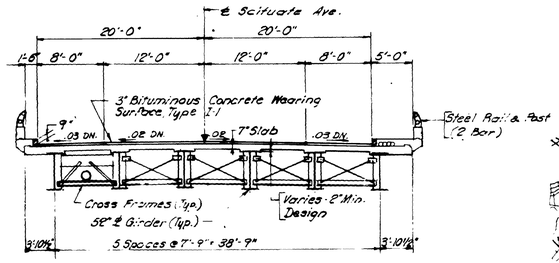

SECTION A-A

SCALE: 1/8" = 1'-0"

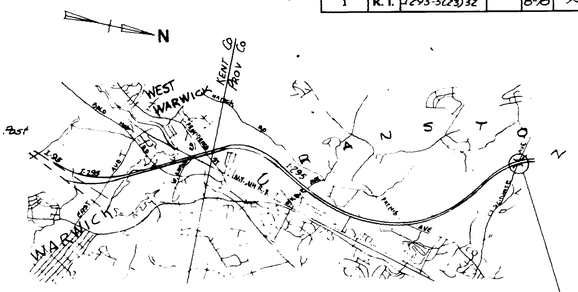

KEY MAP

SCALE: 1" = 4,800'

1 3/4 1/2 1/4 0 1 2
SCALE OF MILES

LAWTON BRIDGE
NO. 731

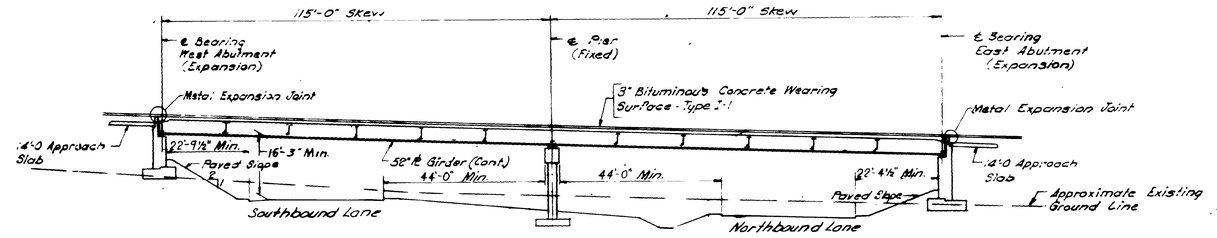

LONGITUDINAL SECTION

SCALE: 1" = 20'

NOTE:
Allowable Soil Pressure 5 KSF

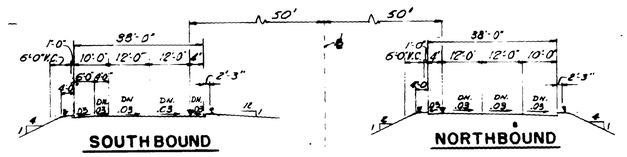

SOUTHBOUND **NORTHBOUND**

I-295

SCALE: 1" = 20'
(STA. 331 + 00)

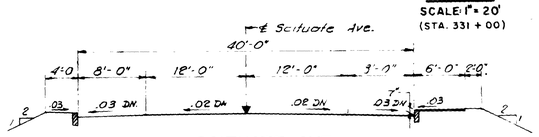

SCITUATE AVE.

SCALE: 1/8" = 1'-0"
(STA. 81 + 50)

APPROACH SECTIONS

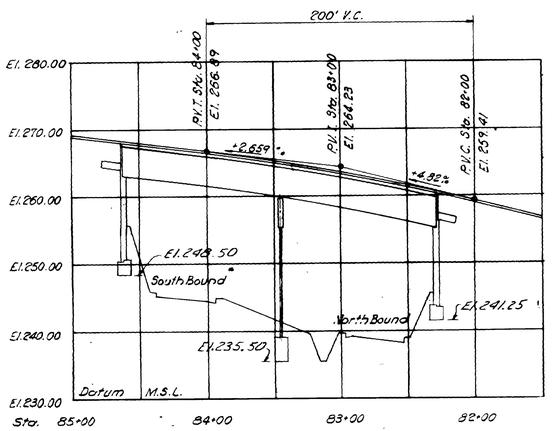

SCITUATE AVE.

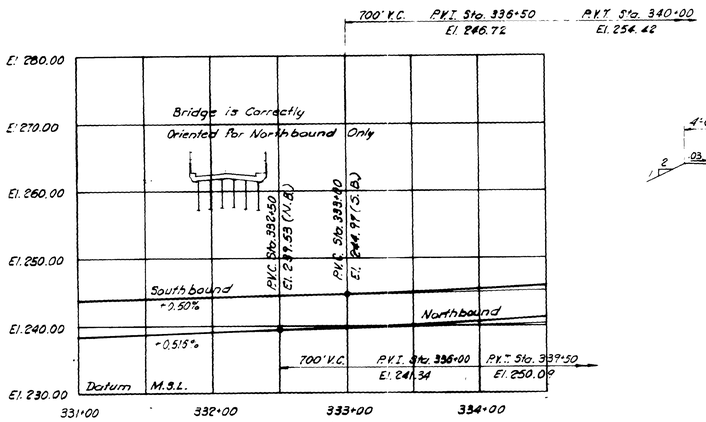

I-295

PROFILES

SCALE - HORIZONTAL 1" = 50'
VERTICAL 1" = 10'

REVISIONS		
NO.	DATE	BY

RHODE ISLAND
DEPARTMENT OF PUBLIC WORKS
DIVISION OF ROADS AND BRIDGES

INTERSTATE ROUTE 295
RALPHS POND TO SCITUATE AVENUE (C)

CRANSTON RHODE ISLAND

LAWTON BRIDGE
GENERAL PLAN & SECTIONS

CHARLES A. MAGUIRE & ASSOCIATES
ENGINEERS
PROVIDENCE, R. I. BOSTON, MASS.
DATE MARCH 1967 DESIGNED BY
SCALE: AS SHOWN SHEET 8-29 OF 95

APPROVED _____ SUPERVISING CIVIL ENGINEER (BRIDGE)
APPROVED _____ CHIEF ENGINEER
FINAL DATE

SET NO. ____
PRINTED ____
ISSUED TO ____

731,002

731,003

FED. ROAD DIV. NO.	STATE	FED. AID PROJ. NO.	FISCAL YEAR	SHEET NO.	TOTAL SHEETS
1	R. I.	I295-5(23)32		B-79	95

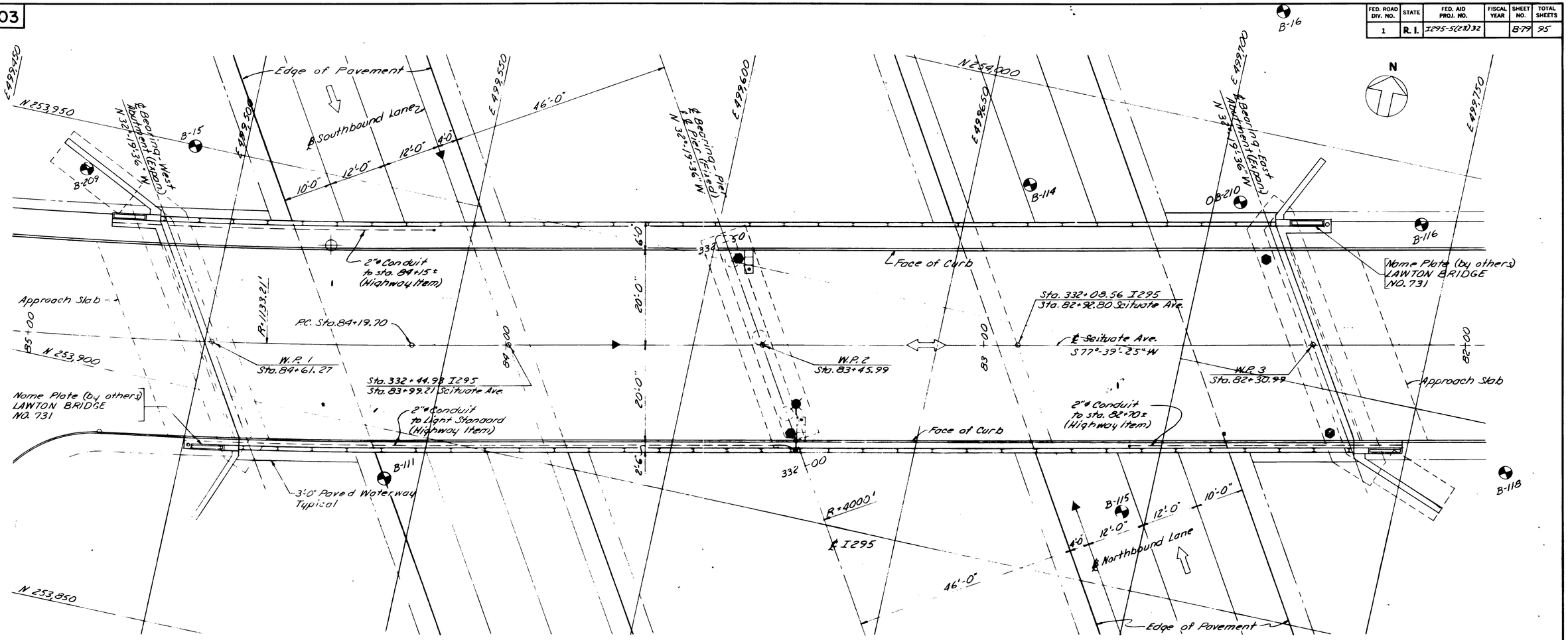

LOCATION PLAN

WORKING POINT COORDINATES

W.P.	Station Scituate Ave.	COORDINATES North	COORDINATES East
1	84+61.27	253910.254	499501.684
2	83+45.99	253934.150	499614.460
3	82+30.99	253958.733	499726.802

LEGEND

- Bore Hole
- Point of application of profile grade
- Traffic flow
- Point of minimum vertical clearance
- Sub pavement Drain
- 3 Section Scupper
- Light Standard Foundation (Standard & Luminaire by others)

NOTES:

1. Rail Post spacing is on sht. B-91.
2. Bore Hole Logs are on sht. B-94 & 95.
3. For Paved Slope & Waterways see Detail 10 on sht. B-3.

REVISIONS		
NO.	DATE	BY
1	16 Feb 68	RER

RHODE ISLAND
DEPARTMENT OF PUBLIC WORKS
DIVISION OF ROADS AND BRIDGES

INTERSTATE ROUTE 295
RALPHS POND TO SCITUATE AVENUE (C)
CRANSTON RHODE ISLAND

LAWTON BRIDGE
LOCATION PLAN

CHARLES A. MAGUIRE & ASSOCIATES
ENGINEERS
PROVIDENCE, R. I. BOSTON, MASS.
DATE MARCH 1967 DESIGNED BY
SCALE 1" - 10' 0
EXCEPT AS NOTED SHEET B-79 OF 95

APPROVED _____ SUPERVISING CIVIL ENGINEER (BRIDGE)
APPROVED _____ CHIEF ENGINEER
FINAL DATE

SET NO. ____ PRINTED
ISSUED TO

731,003

731,004

FED. ROAD DIV. NO.	STATE	FED. AID PROJ. NO.	FISCAL YEAR	SHEET NO.	TOTAL SHEETS
1	R. I.	I295-5(23)32		8-80	95

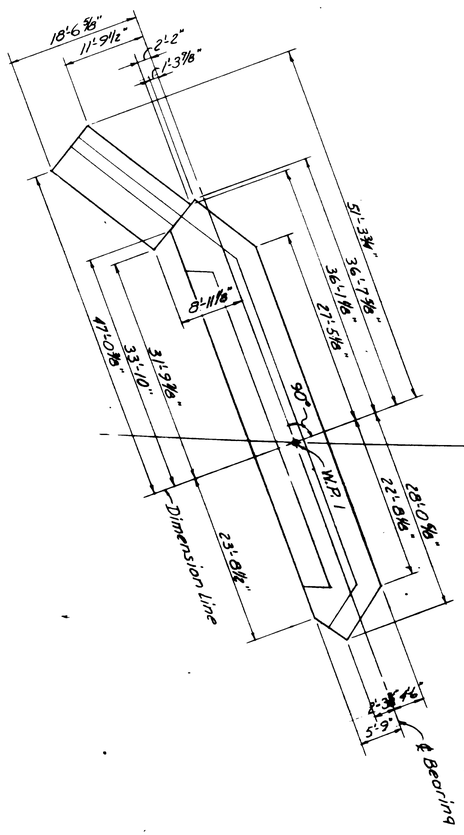

WEST ABUTMENT

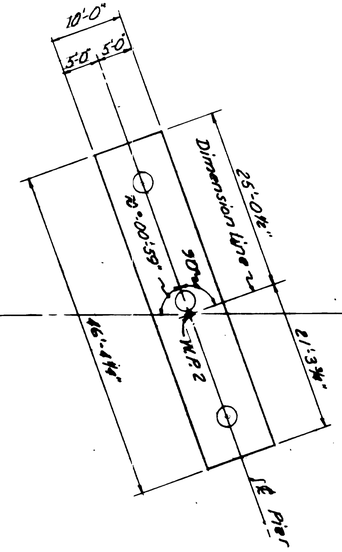

PIER

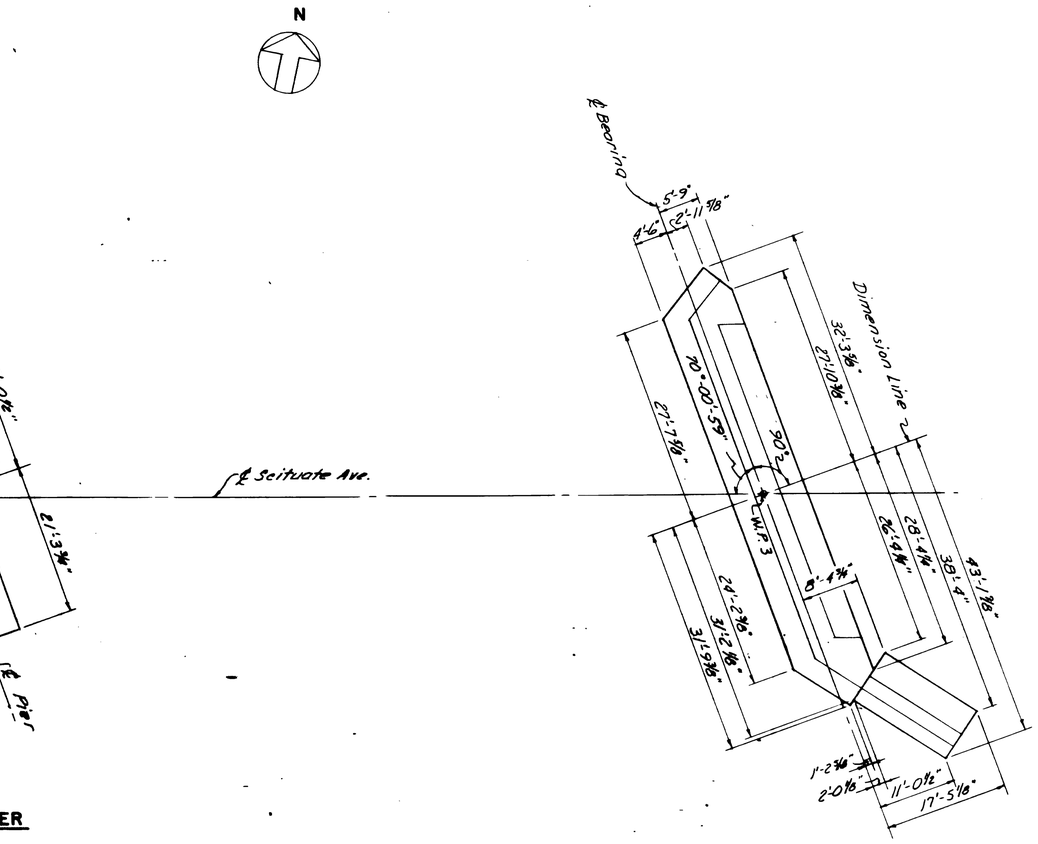

EAST ABUTMENT

FOUNDATION PLAN

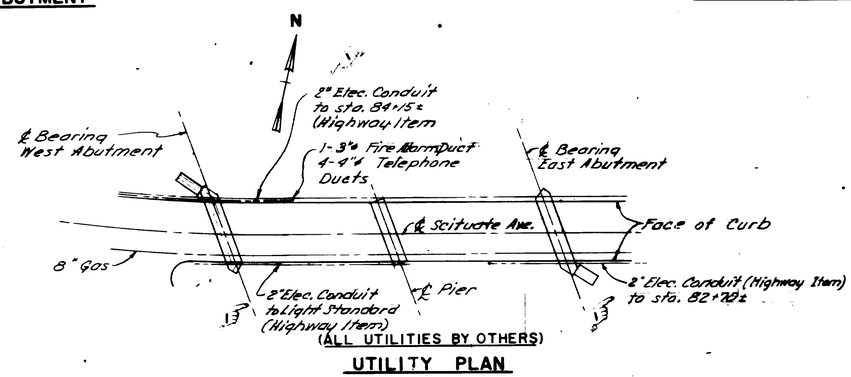

UTILITY PLAN

SCALE 1" = 50'-0"

REVISIONS		
NO.	DATE	BY
1	4/6/68	R.E.R.

RHODE ISLAND
DEPARTMENT OF PUBLIC WORKS
DIVISION OF ROADS AND BRIDGES

INTERSTATE ROUTE 295

RALPHS POND TO SCITUATE AVENUE (C)

CRANSTON RHODE ISLAND

LAWTON BRIDGE
FOUNDATION & UTILITY PLAN

CHARLES A. MAGUIRE & ASSOCIATES
ENGINEERS
PROVIDENCE, R. I. BOSTON, MASS.
DATE MARCH 1967 DESIGNED BY
SCALE 1" = 10'-0"
EXCEPT AS NOTED SHEET 8-80 OF 95

APPROVED _____ SUPERVISING CIVIL ENGINEER (BRIDGE)
APPROVED _____ CHIEF ENGINEER
FINAL DATE

SET NO. ____
PRINTED ____
ISSUED TO ____

731,004

731,010

FED. ROAD DIV. NO.	STATE	FED. AID PROJ. NO.	FISCAL YEAR	SHEET NO.	TOTAL SHEETS
1	R. I.	I295-5(23)32		B-86	95

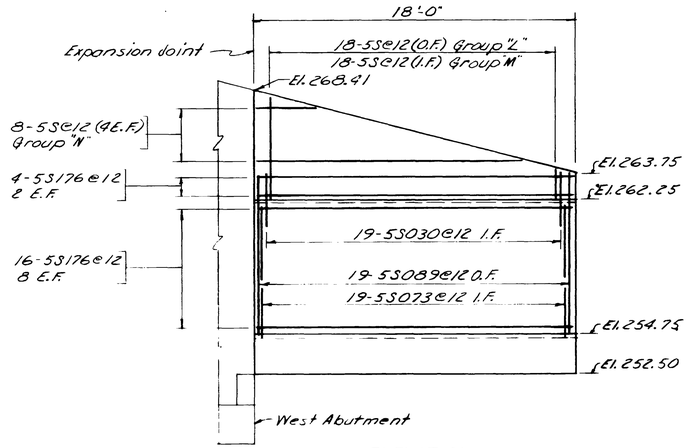

ELEVATION

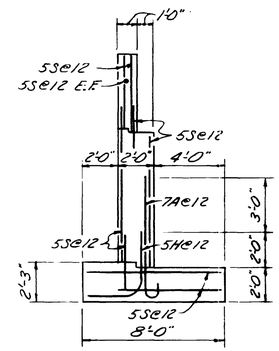

TYPICAL SECTION THRU WINGWALL

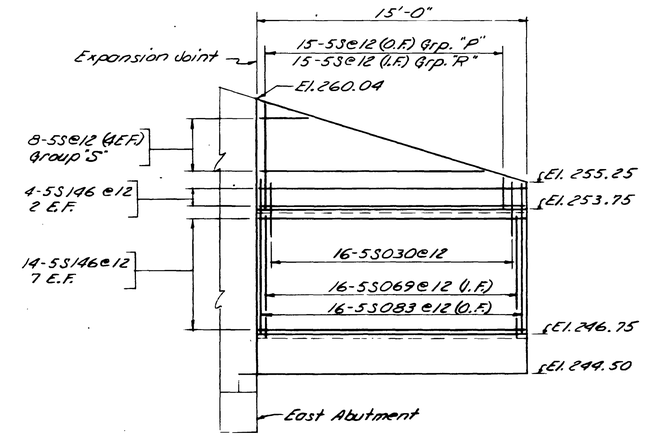

ELEVATION

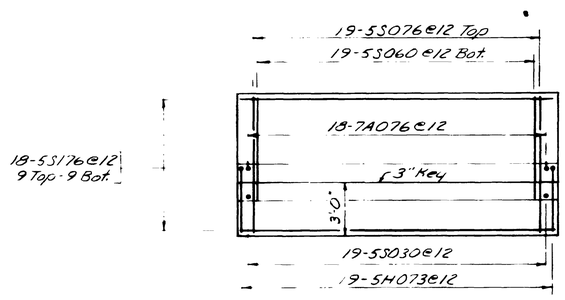

PLAN

NORTHWEST WINGWALL

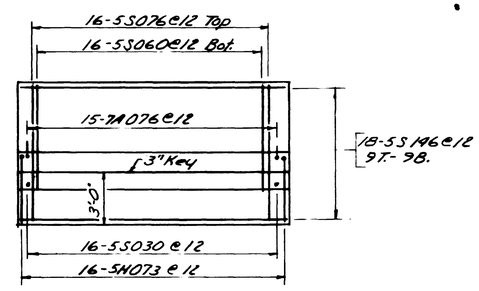

PLAN

SOUTHEAST WINGWALL

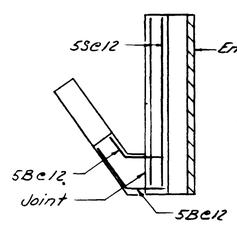

DETAIL A

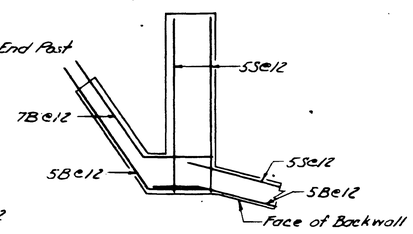

DETAIL B

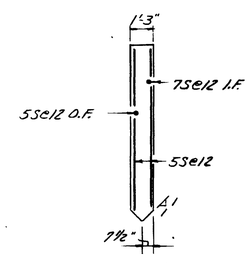

SECTION THRU CANTILEVERED WINGWALL

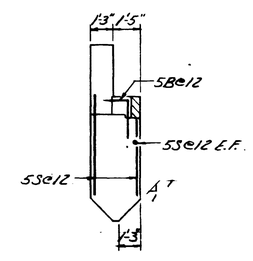

SECTION THRU CANTILEVERED END POST

WINGWALL DETAILS

NOTE

For all applicable notes, see sht. B-81.

REVISIONS		
NO.	DATE	BY

RHODE ISLAND
DEPARTMENT OF PUBLIC WORKS
DIVISION OF ROADS AND BRIDGES

INTERSTATE ROUTE 295

RALPHS POND TO SCITUATE AVENUE (C)

CRANSTON RHODE ISLAND

LAWTON BRIDGE
WINGWALLS

CHARLES A. MAGUIRE & ASSOCIATES
ENGINEERS
PROVIDENCE, R. I. BOSTON, MASS.
DATE MARCH 1967 DESIGNED BY
SCALE 1/4" = 1'-0"
EXCEPT AS NOTED SHEET B-86 OF 95

APPROVED _____ SUPERVISING CIVIL ENGINEER (BRIDGE)
APPROVED _____ CHIEF ENGINEER
FINAL DATE

SET NO. PRINTED
ISSUED TO

731,010

731,011

FED. ROAD DIV. NO.	STATE	FED. AID PROJ. NO.	FISCAL YEAR	SHEET NO.	TOTAL SHEETS
1	R.I.	I-295-5(23)32		B-87	95

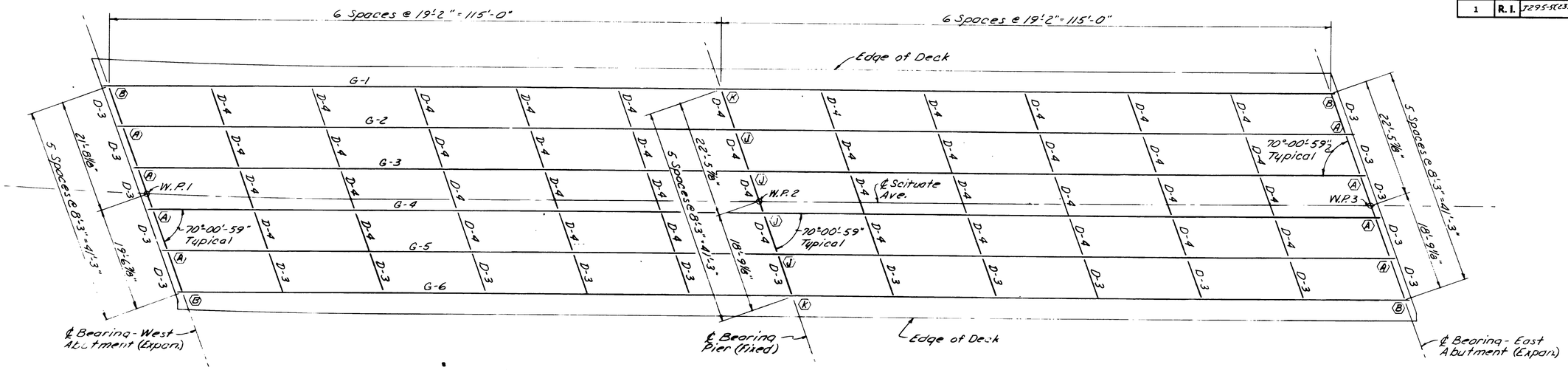

FRAMING PLAN

267.74	267.21 .04	266.51 .05	265.69 .02	264.81	G-1	263.88 .02	262.87 .05	261.72 .04	260.46
(266.99)	(266.44) .08	(265.73) .09	(264.97) .04	(263.95)		(263.07) .04	(262.09) .09	(260.98) .08	(259.71)
267.95	267.35 .05	266.63 .05	265.83 .03	264.92	G-2	263.99 .03	262.96 .03	261.81 .05	260.54
(267.20)	(266.66) .09	(265.90) .09	(265.15) .04	(264.11)		(263.22) .04	(262.20) .09	(261.10) .09	(258.79)
268.13	267.47 .05	266.73 .05	265.91 .03	265.00	G-3	264.06 .03	263.02 .05	261.87 .05	260.58
(267.38)	(266.80) .09	(266.05) .08	(265.28) .04	(264.22)		(263.31) .04	(262.27) .09	(261.15) .09	(259.83)
268.34	267.57 .05	266.78 .05	265.94 .03	264.99	G-4	264.03 .03	262.98 .05	261.82 .05	260.53
(267.59)	(267.00) .09	(266.19) .08	(265.39) .04	(264.30)		(263.36) .04	(262.29) .09	(261.14) .09	(259.78)
268.51	267.65 .05	266.79 .05	265.84 .03	264.80	G-5	263.77 .03	262.71 .05	261.55 .05	260.24
(267.70)	(267.05) .09	(266.19) .08	(265.33) .04	(264.18)		(263.18) .04	(262.05) .09	(260.84) .09	(259.43)
268.28	267.43 .04	266.55 .05	265.57 .02	264.49	G-6	263.45 .02	262.40 .05	261.21 .04	259.90
(267.48)	(266.79) .08	(265.94) .09	(265.05) .04	(263.90)		(262.87) .04	(261.75) .09	(260.49) .08	(259.10)

℄ Brg.-West Abut. — ℄ Brg.-Pier — ℄ Brg.-East Abut.

N

DECK GRADE PLAN

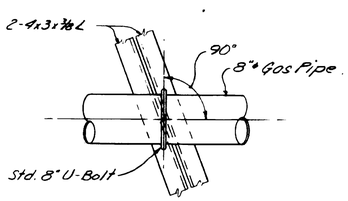

DETAIL OF GAS PIPE

SCALE: 1" = 10'-0"

FRAMING NOTES

1. ⬡ indicates Bearing type
2. For diaphragm details, see sht. B-6.
3. For Anchor Bolt spacing, see Abutments & Pier plans.
4. Dimensions given at ℄ Bearing.
5. Girders detailed on sht. B-88.
6. Bearings A & B are detailed on sht. B-4.
7. Bearings J & K are detailed on sht. B-89.

DECK GRADE NOTES

1. Elevation of girders are given at:
   a) ℄ bearing of each girder
   b) midspan of each girder
   c) quarter point of each stringer
2. (00.00) indicates elevation at top of the steel girders before the concrete deck is placed.
3. .00 indicates dead load deflection caused by the weight of the deck, given in feet.
4. 00.00 indicates elevation at the top of concrete deck before the placing of the wearing surface and other superimposed loads.
5. (.00) indicates superimposed dead load deflections caused by the weight of the wearing surface, curbing and safetywalk with railing, given in feet.

REVISIONS		
NO.	DATE	BY

RHODE ISLAND
DEPARTMENT OF PUBLIC WORKS
DIVISION OF ROADS AND BRIDGES

INTERSTATE ROUTE 295
RALPHS POND TO SCITUATE AVENUE (C)
CRANSTON — RHODE ISLAND

LAWTON BRIDGE
FRAMING & DECK GRADE PLANS

CHARLES A. MAGUIRE & ASSOCIATES
ENGINEERS
PROVIDENCE, R. I. — BOSTON, MASS.
DATE MARCH 1967 — DESIGNED BY
SCALE 1" = 10'-0"
EXCEPT AS NOTED — SHEET B-87 OF 95

APPROVED _____ SUPERVISING CIVIL ENGINEER (BRIDGE)
APPROVED _____ CHIEF ENGINEER
FINAL DATE

SET NO. ____ PRINTED ____ ISSUED TO ____

731,011

731,012

FED. ROAD DIV. NO.	STATE	FED. AID PROJ. NO.	FISCAL YEAR	SHEET NO.	TOTAL SHEETS
1	R.I.	I295-5(23)32		889	95

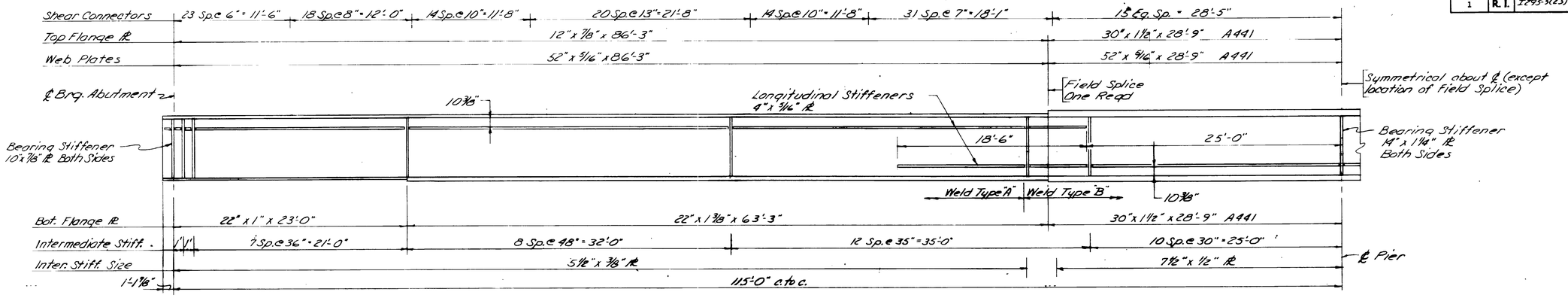

GIRDERS G-1 & G-6

NOT TO SCALE

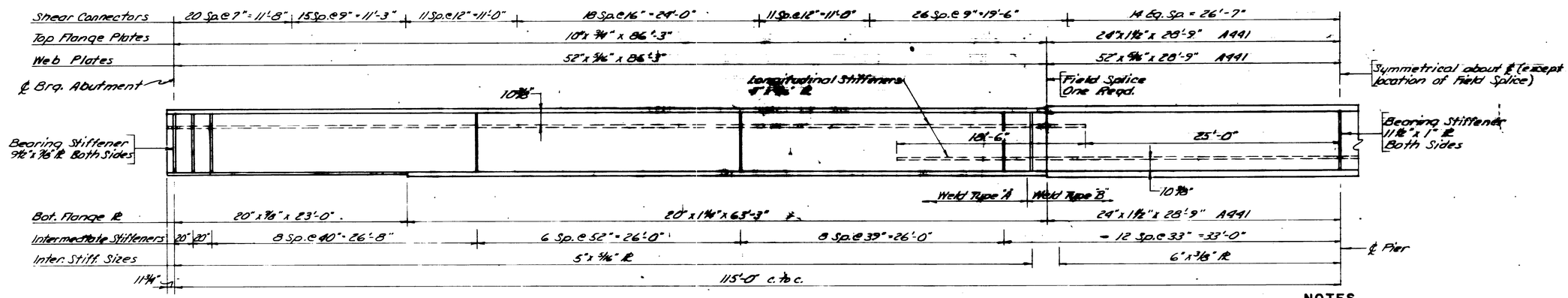

GIRDERS G-2 THRU G-5

NOT TO SCALE

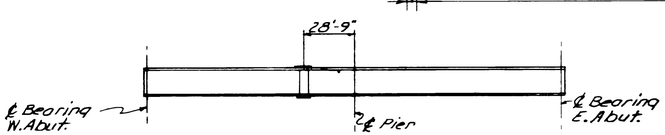

FIELD SPLICE LOCATION

NOT TO SCALE

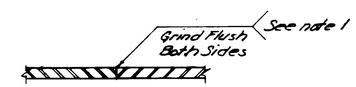

WEB WELD DETAIL

NOT TO SCALE

NOTES

1. See AWS figure 216, page 22-1966, B-L1-S, B-L3-S or B-L2b-S.
2. All structural steel shall be A.S.T.M. A36 except as shown.
3. Diaphragm locations are shown on Framing Plan.
4. When diaphragm connection ℄ and intermediate stiff. are in close proximity (3' or less) the inter. stiff. may be omitted.
5. Intermediate stiffeners to be placed on interior side of fascia girder and on only one side of interior girders.
6. There shall be a 3/4" gap between longitudinal stiff. and diaphragm connection ℄ or bearing stiffeners.
7. For minimum size welds see chart on sht. B-6.
8. All dimensions are given along ℄ Girder.
9. The ends of girders shall be vertical after all dead load has been placed.
10. Shear connector detail on sht. B-6 ; Detail 26.

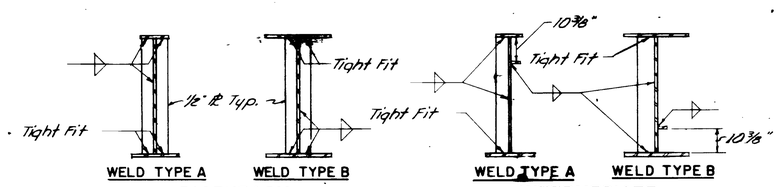

STIFFENER DETAILS

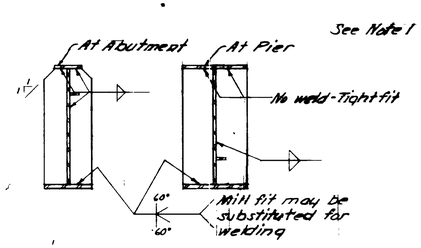

BEARING

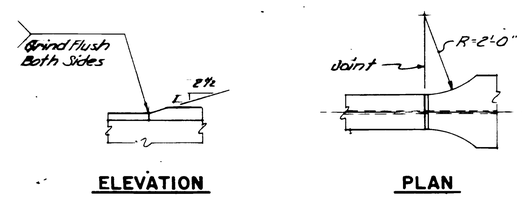

FLANGE WELD DETAIL

NOT TO SCALE

REVISIONS		
NO.	DATE	BY

RHODE ISLAND
DEPARTMENT OF PUBLIC WORKS
DIVISION OF ROADS AND BRIDGES

INTERSTATE ROUTE 295
RALPHS POND TO SCITUATE AVE. (C)

CRANSTON RHODE ISLAND

LAWTON BRIDGE
STEEL DETAILS SHEET-1

CHARLES A. MAGUIRE & ASSOCIATES
ENGINEERS
PROVIDENCE, R.I. BOSTON, MASS.
DATE [illegible] DESIGNED BY
SCALE 3/8" = 1'-0"
SHEET AS NOTED SHEET B-5 OF 95

APPROVED _____ SUPERVISING CIVIL ENGINEER (BRIDGE)
APPROVED _____ CHIEF ENGINEER
FINAL DATE

SET NO.
PRINTED

731,012

731,013

FED. ROAD DIV. NO.	STATE	FED. AID PROJ. NO.	FISCAL YEAR	SHEET NO.	TOTAL SHEETS
1	R. I.	I 295-5(23)32		89	95

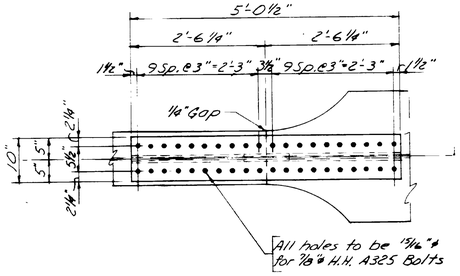

PLAN AT TOP FLANGE

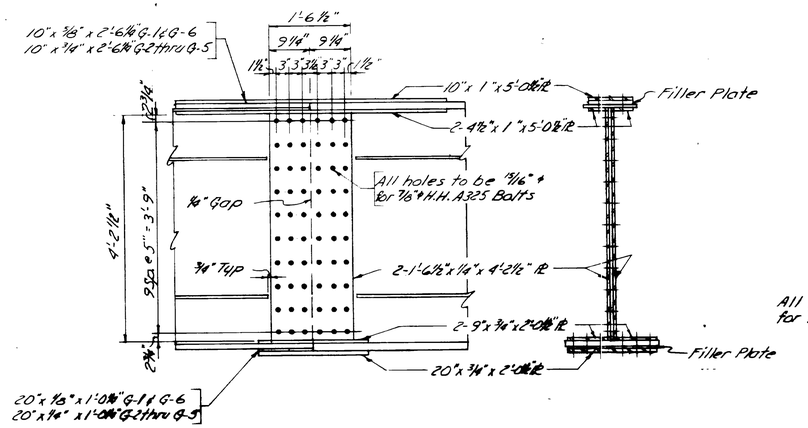

ELEVATION SECTION

FRICTION TYPE FIELD SPLICE

SCALE: 3/4" = 1'-0"

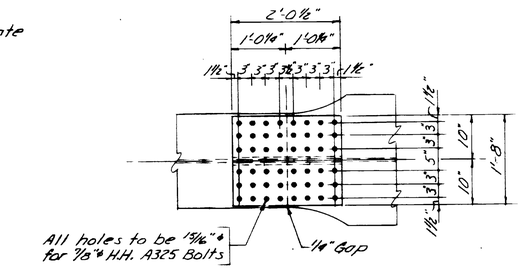

PLAN AT BOTTOM FLANGE

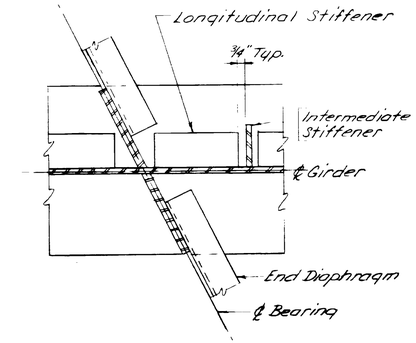

DIAPHRAGM CONNECTIONS AT BEARING STIFFENER

SCALE: 1 1/2" = 1'-0"

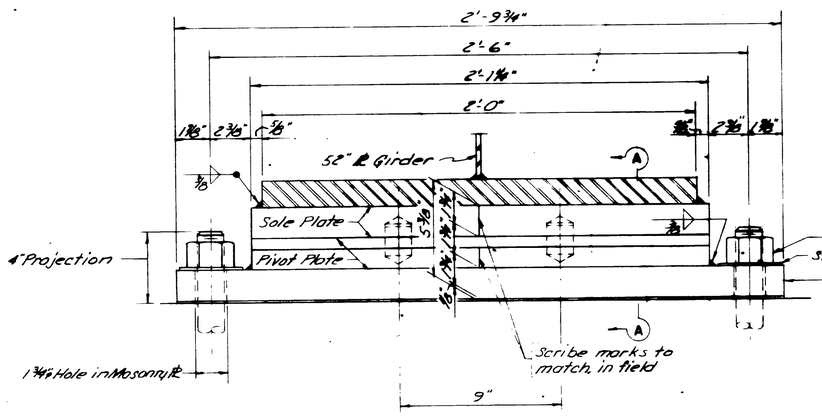

FIXED BEARING TYPE "J"

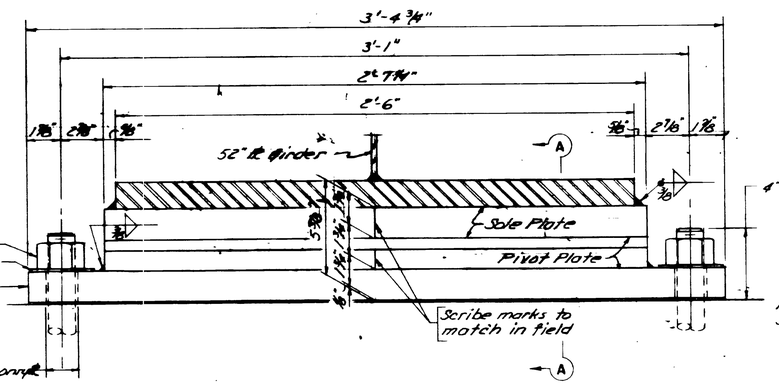

FIXED BEARING TYPE "K"

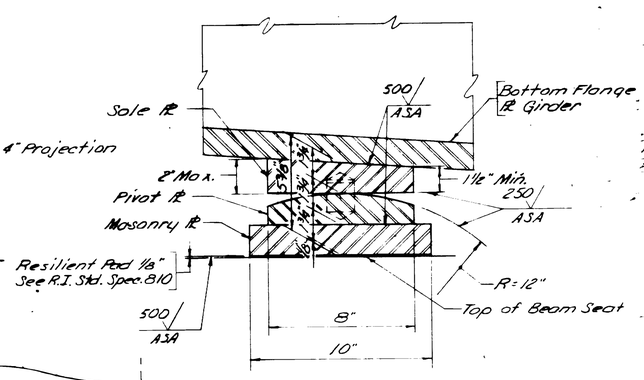

SECTION A-A

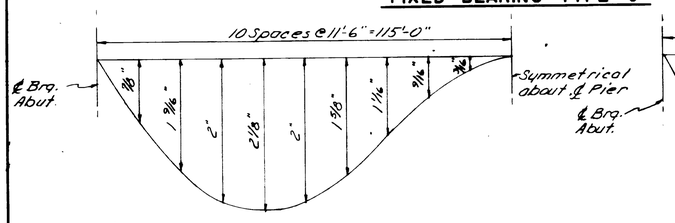

GIRDERS G-1 & G-6

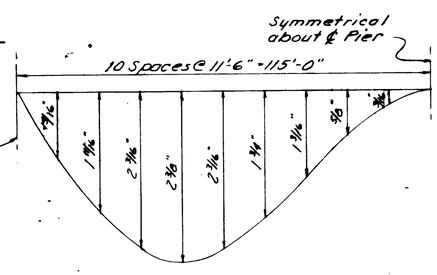

GIRDERS G-2 THRU G-5

DL & SDL DEFLECTIONS

SCALE: HOR. 1" = 20'
VERT. 1" = 1"

G-1 & G-6		G-2 thru G-5	
"A"	"B"	"A"	"B"
11'-6"	2 1/8"	11'-6"	2 3/16"
23'-0"	3 7/16"	23'-0"	4 1/16"
34'-6"	5 3/8"	34'-6"	5 9/16"
46'-0"	6 3/8"	46'-0"	6 3/8"
57'-6"	7"	57'-6"	7 3/16"
69'-0"	7 3/16"	69'-0"	7 3/16"
80'-6"	7 3/16"	80'-6"	7 3/16"
92'-0"	6 15/16"	92'-0"	7"
103'-6"	6 3/4"	103'-6"	6 3/4"
115'-0"	6 3/8"	115'-0"	6 3/8"

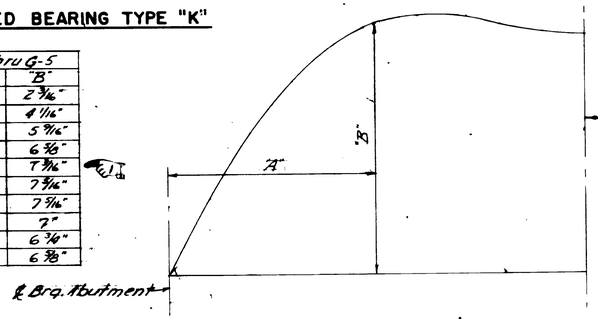

CAMBER DIAGRAM

SCALE: HOR. 1" = 20'-0"
VERT. 1/2" = 1"

REVISIONS		
NO.	DATE	BY
1	8-4-67	JNC

RHODE ISLAND
DEPARTMENT OF PUBLIC WORKS
DIVISION OF ROADS AND BRIDGES

INTERSTATE ROUTE 295

RALPHS POND TO SCITUATE AVENUE (C)

CRANSTON RHODE ISLAND

LAWTON BRIDGE
STEEL DETAIL SHEET-2

CHARLES A. MAGUIRE & ASSOCIATES
ENGINEERS
PROVIDENCE, R. I. BOSTON, MASS.
DATE MARCH, 1967 DESIGNED BY
SCALE 3/4" = 1'-0"
EXCEPT AS NOTED SHEET 89 OF 95

APPROVED _____ SUPERVISING CIVIL ENGINEER (BRIDGE)
APPROVED _____ CHIEF ENGINEER
FINAL DATE

SET NO. ____
PRINTED ____
ISSUED TO ____

731,013