May 15, 2013

STATE OF RHODE ISLAND AND PROVIDENCE PLANTATION
DEPARTMENT OF ADMINISTRATION

DIVISION OF PURCHASES BID NO. 7463384

RHODE ISLAND DEPARTMENT OF TRANSPORTATION

RHODE ISLAND CONTRACT NO.2013-CH-018

FEDERAL-AID PROJECT NO. FAP Nos: HPP-4865(001)

Trestle Trail - East Section

LOG BRIDGE ROAD (SUMMIT) TO TOWN FARM ROAD (NEAR)

CITY/TOWN OF Coventry

COUNTY OF KENT

NOTICE TO PROSPECTIVE BIDDERS

ADDENDUM NO. 3 Prospective bidders and all concerned are hereby notified of the following changes in the Plans, Specifications, Proposal and Distribution of Quantities for this contract. These changes shall be incorporated in the Plans, Specifications, Proposal and Distribution of Quantities, and shall become an integral part of the Contract Documents.

A. Clarification

1. General Clarification

a. Gravel Borrow Subbase Course is required under the Equestrian Trail where 4" of stone dust is specified for the surface.

B. Contract Documents

1. Distribution of Quantities

a. Delete pages Index 1 (R-1) through Index 5 (R-1) in their entirety and insert revised pages Index 1 (R-2) through Index 5 (R-2) attached to this Addendun No. 3. Items have been revised and added to the DOQ.

b. Delete page 6 (R-1) in its entirety and insert revised page 6 (R-2) attached to this Addendum No. 3. Item 202.0100 has been revised.

c. Delete page 10 (R-1) in its entirety and insert revised page 10 (R-2) attached to this Addendum No. 3. Item 202.0700 has been revised.

e. Delete page 24 in its entirety and insert revised page 24 (R-1) and new page 24a attached to this Addendum No. 3. Item 302.0100 has been revised.

f. Delete pages 76 through 78 in their entirety and insert revised pages 76 (R-1), 77 (R-1) and 78 (R-1) attached to this Addendum No. 3. Items T20.2006 and T20.2012 have been revised.

g. Delete page 81 (R-1) in its entirety and insert revised page 81 (R-2) and new page 81a attached to this Addendum No. 3. Item 202.9903 has been revised.

h. Delete page 85 in its entirety and insert revised page 85 (R-1) attached to this Addendum No. 3. The total quantity for Item 202.9903 has been revised.

i. Delete page 88 in its entirety and insert revised page 88 (R-1) and new page 89 attached to this Addendum No. 3. Items T20.0006,T20.0012, T20.0104 and T20.9924 have been added.

C. Drawings/Plans - Change/Addition

1. Volume 1, Sheet No. V1007 - Typical Sections No. 1

a. Replace sheet V1007 with sheet V1007 (R-2) attached to this Addendum No. 3. New "Shared-Use Path and Equestrian Trail (Normal Fill Section)" detail was added.

RI Department of Transportation
Chief Engineer

Table of Contents - Distribution of Quantities

Project Name - Trestle Trail - East Section
Estimate Name - Addendum No. 3
R.I. Contract No. - 2013-CH-018
FAP Nos: HPP-4865(001)

ItemCode	Description	Page
201.0301	CUTTING AND DISPOSING ISOLATED TREES AND STUMPS (4"- 24")	1
201.0320	CLEARING AND GRUBBING	1
201.0401	REMOVE AND DISPOSE GRANITE CURB	2
201.0402	REMOVE AND DISPOSE CONCRETE CURB	2
201.0403	REMOVE AND DISPOSE SIDEWALKS	3
201.0409	REMOVE AND DISPOSE FLEXIBLE PAVEMENT	3
201.0410	REMOVE AND DISPOSE CATCH BASINS	4
201.0414	REMOVE AND DISPOSE PIPE - ALL SIZES	4
201.0415	REMOVE AND DISPOSE GUARDRAIL AND POST ALL TYPES	4
201.0419	REMOVE AND DISPOSE FENCE	4
201.0424	REMOVE AND DISPOSE RETAINING WALL	4
201.0428	REMOVE AND DISPOSE FRAME AND GRATE OR FRAME AND COVER	5
201.9902	REMOVE AND DISPOSE CONCRETE OR STONE BLOCKS	5
201.9904	REMOVE AND DISPOSE WOODEN STEPS	5
201.9905	REMOVE AND DISPOSE 8'X20' BOX CONTAINER	5
201.9906	REMOVE AND DISPOSE 24' TRAILER	5
201.9907	REMOVE AND DISPOSE WOOD POST	5
202.0100	**EARTH EXCAVATION**	**6**
202.0201	**** ITEM DELETED ****	**6**
202.0700	**COMMON BORROW**	**10**
202.9901	STONE DUST 4" DEEP	10
202.9902	HANDLING, HAULING, STOCKPILING AND MANAGEMENT OF CONTAMINATED SOILS	13
203.0100	STRUCTURAL EXCAVATION EARTH	13
203.0600	FILL GRAVEL BORROW UNDER STRUCTURES	13
203.0700	PERVIOUS FILL	14
204.0100	TRIMMING AND FINE GRADING	14
205.0270	**** ITEM DELETED ****	**15**
206.9901	COMPOST FILTER SOCK	17
207.0202	BALED HAY DITCH EROSION CHECK STANDARD 9.4.0	20
211.0100	CONSTRUCTION ACCESSES STANDARD 9.9.0	23
212.2000	CLEANING AND MAINTENANCE OF EROSION CONTROLS	24
302.0100	**GRAVEL BORROW SUBBASE COURSE**	**24**
401.9901	BITUMINOUS BASE COURSE, CLASS 19	24
401.9902	BITUMINOUS SURFACE COURSE, CLASS 9.5	25
401.9903	BITUMINOUS SURFACE COURSE, CLASS 4.75	26
403.0300	ASPHALT EMULSION TACK COAT	26
701.0412	REINFORCED CONCRETE PIPE M 170 CLASS III 12 INCH	26
701.0418	REINFORCED CONCRETE PIPE M 170 CLASS III 18 INCH	26
701.4312	12 INCH SMOOTH INTERIOR CORRUGATED POLYETHYLENE PIPE	27
701.4318	18 INCH SMOOTH INTERIOR CORRUGATED POLYETHYLENE PIPE	27
701.8003	PIPE BEDDING CLASS C	27
701.9901	8 INCH SMOOTH INTERIOR CORRUGATED POLYETHYLENE PIPE	28
701.9902	12 INCH HDPE PIPE FLARED END SECTION	28
701.9903	18 INCH HDPE PIPE FLARED END SECTION	29
702.0514	FRAME AND GRATE STANDARD 6.4.0	29
702.0517	FRAME AND GRATE, STANDARD 6.3.2	29
702.0522	FRAME AND COVER STANDARD 6.2.1	29
702.0541	GRANITE INLET STONE 38'' STANDARD 7.3.6	30
702.0543	GRANITE APRON STONE 38'' STANDARD 7.3.8	30
702.0630	PRECAST MANHOLE 4' DIAMETER STANDARD 4.2.0	30
702.0635	PRECAST MANHOLE 5' DIAMETER STANDARD 4.2.1	30
702.0703	CATCH BASIN TYPE 'F' ROUND STANDARD 3.4.2	31
702.0705	CATCH BASIN W/GUTTER INLET STANDARD 3.4.1	31
702.0840	ALTERNATE TOP COVER ROUND PRECAST MANHOLES AND CATCH BASINS STANDARD 4.7.2	31

Table of Contents - Distribution of Quantities

Project Name - Trestle Trail - East Section
Estimate Name - Addendum No. 3
R.I. Contract No. - 2013-CH-018
FAP Nos: HPP-4865(001)

ItemCode	Description	Page
702.9901	FURNISH AND INSTALL PVC DRAINAGE MANHOLE, 2' DIAMETER W/FRAME AND COVER	31
702.9902	FURNISH AND INSTALL PVC DRAINAGE BASIN, 1' DIAMETER W/FRAME AND GRATE	32
702.9903	FURNISH AND INSTALL PVC DRAINAGE STRUCTURE, 2' DIAMETER W/FRAME AND GRATE	33
702.9904	FURNISH AND INSTALL 3.5' X 40' WATER QUALITY UNIT W/PVC SUMP TEE, ACCESS RISERS, FRAME AND COVERS	33
702.9905	R.R. MONUMENT HANDHOLE	33
703.0608	8" PERFORATED CORRUGATED POLYETHLYNE PIPE M252 UNDERDRAIN WITH FILTER MATERIAL STANDARD 1.1.0	33
703.0812	12" PERFORATED CORRUGATED POLYETHYLENE PIPE M294 COMBINATION DRAIN WITH FILTER MATERIAL STANDARD 1.2.0	34
703.9901	18" PERFORATED CORRUGATED POLYETHYLENE PIPE M294 COMBINATION DRAIN WITH FILTER MATERIAL	34
708.9901	CLEAN OUT DRAINAGE CULVERT	34
711.0300	SEEDED DITCH STANDARD 8.1.0	35
800.9901	FLAT RIVER RESERVOIR BRIDGE NO. 1124	36
800.9902	COVENTRY CENTER POND BRIDGE NO. 1125	36
800.9903	QUIDNICK BROOK BRIDGE NO. 1127	37
800.9904	QUIDNECK RESERVOIR BRIDGE NO. 1128	37
803.0300	PARTIAL REMOVAL AND DISPOSAL OF EXISTING CONCRETE MASONRY	37
803.0400	CLEANING BRIDGE BEAM SEATS	37
803.9901	REMOVE, REUSE, STOCKPILE AND OR DISPOSE EXISTING STONE MASONRY - FLAT RIVER RESERVOIR BRIDGE NO. 1124	38
803.9902	REMOVE, REUSE, STOCKPILE AND OR DISPOSE EXISTING STONE MASONRY - COVENTRY CENTER POND BRIDGE NO. 1125	38
803.9903	REMOVE, REUSE, STOCKPILE AND OR DISPOSE EXISTING STONE MASONRY - QUIDNICK BROOK BRIDGE NO. 1127	38
803.9904	REMOVE, REUSE, STOCKPILE AND OR DISPOSE EXISTING STONE MASONRY - QUIDNICK RESERVOIR BRIDGE NO. 1128	38
803.9912	REMOVE AND DISPOSE EXISTING BRIDGE DECK - COVENTRY CENTER POND BRIDGE NO. 1125	39
807.9901	CLEANING, REPOINTING & GROUTING ASHLAR MASONRY - FLAT RIVER RESERVOIR BRIDGE NO. 1124	39
807.9902	CLEANING, REPOINTING &GROUTING ASHLAR MASONRY - COVENTRY CENTER POND BRIDGE NO. 1125	39
807.9903	CLEANING, REPOINTING & GROUTING ASHLAR MASONRY - QUIDNICK BROOK BRIDGE NO. 1127	39
807.9904	CLEANING, REPOINTING & GROUTING ASHLAR MASONRY - QUIDNICK RESERVOIR BRIDGE NO. 1128	40
817.2110	**** ITEM DELETED ****	**40**
820.0110	**CONCRETE SURFACE TREATMENT (PROTECTIVE COATING)**	**40**
824.9901	STEEL GIRDER REPAIR - FLAT RIVER RESERVOIR BRIDGE NO. 1124	41
824.9902	STEEL GIRDER REPAIR - COVENTRY CENTER POND BRIDGE NO. 1125	41
825.9901	REPAINTING EXISTING STRUCTURAL STEEL - FLAT RIVER RESERVOIR BRIDGE NO. 1124	41
825.9902	REPAINTING EXISTING STRUCTURAL STEEL - COVENTRY CENTER POND BRIDGE NO. 1125	41
830.9912	BRIDGE INSPECTION HANDRAIL - FLAT RIVER RESERVOIR BRIDGE NO. 1124	41
901.0151	TERMINAL END SECTION SINGLE FACE STANDARD 34.3.2	42
901.0193	GUARDRAIL STEEL BEAM SINGLE FACE STANDARD 34.2.0	42
901.9901	FURNISH AND INSTALL VEHICLE BARRIER RAILING	42
901.9902	FURNISH AND INSTALL METAL RAIL FENCE - WITH PROTECTIVE SCREEN FENCE	43

Table of Contents - Distribution of Quantities

Project Name - Trestle Trail - East Section
Estimate Name - Addendum No. 3
R.I. Contract No. - 2013-CH-018
FAP Nos: HPP-4865(001)

ItemCode	Description	Page
901.9903	FURNISH AND INSTALL METAL RAIL FENCE - WITHOUT PROTECTIVE SCREEN FENCE	43
902.0100	STEEL BACKED TIMBER GUARDRAIL STANDARD 34.4.0	43
902.9901	FURNISH AND INSTALL PRECAST CONCRETE EQUESTRIAN MOUNTING BLOCK	44
902.9902	FURNISH AND INSTALL 6"X6"X8' WOOD EQUESTRIAN HITCHING POST	44
902.9903	FURNISH AND INSTALL WOODEN BOLLARD 1'X1'X8' PRESSURE TREATED	44
902.9904	METAL BOLLARD - FIXED	45
902.9905	METAL BOLLARD - HINGED	45
902.9906	CEDAR POST RAIL FENCE	45
903.0110	WOVEN WIRE RIGHT-OF-WAY FENCE STANDARD 31.3.0	48
903.9902	TEMPORARY ACCESS CONTROL FENCING	48
905.0110	PORTLAND CEMENT SIDEWALK MONOLITHIC STANDARD 43.1.0	49
905.0115	PORTLAND CEMENT CONCRETE DRIVEWAY STANDARD 43.5.0	49
906.0110	GRANITE CURB, QUARRY SPLIT STRAIGHT, STANDARD 7.3.0	50
906.0111	GRANITE CURB, QUARRY SPLIT CIRCULAR, STANDARD 7.3.0	50
906.0118	**6' GRANITE TRANSITION CURB, QUARRY SPLIT SPECIAL TRANSITION STANDARD 7.3.2**	**51**
906.0119	3' GRANITE TRANSITION CURB STANDARD 7.3.1	52
906.0210	CEMENT CONCRETE CURB PRECAST STRAIGHT STANDARD 7.1.0	52
906.0211	CEMENT CONCRETE CURB PRECAST CIRCULAR STANDARD 7.1.0	52
906.0230	CEMENT CONCRETE SLOPE FACE CURB PRECAST STRAIGHT STANDARD 7.2.0	53
906.0231	CEMENT CONCRETE SLOPE FACE CURB PRECAST CIRCULAR STANDARD 7.2.0	53
906.0270	PRECAST CONCRETE TRANSITION CURB STANDARD 7.2.2	53
906.0271	PRECAST CONCRETE SLOPE FACE TRANSITION CURB STANDARD 7.2.1	53
906.0280	3' PRECAST CONCRETE TRANSITION CURB STANDARD 7.1.1	54
906.0602	BITUMINOUS BERM STANDARD 7.5.1	54
906.0700	REMOVE, HANDLE, HAUL TRIM RESET CURB EDGING, STRAIGHT, CIRCULAR ALL TYPES	54
906.9901	GRANITE CURB STEPS	54
907.0100	WATER FOR DUST CONTROL	54
911.9901	CONCRETE RETAINING WALL AND RAMP	54
914.5010	FLAGPERSONS	55
914.5020	FLAGPERSONS - OVERTIME	55
917.0105	REMOVE AND REPLACE RURAL MAILBOX POST WITH STANDARD 15.1.0	55
917.0106	REMOVE AND REPLACE MULTIPLE MAILBOX MOUNTING WITH STANDARD 15.2.0	55
918.0100	RURAL MAILBOXES	55
920.0050	PLACED STONE RIPRAP R-1, R-2 STANDARD 8.3.0	56
920.0055	PLACED STONE RIPRAP R-3, R-4, R-5 STANDARD 8.3.0	57
920.0130	BEDDING FOR RIPRAP FS-1 STANDARD 8.3.0	57
920.0135	BEDDING FOR RIPRAP FS-2 STANDARD 8.3.0	58
920.9901	FILTER FABRIC FOR FILTER STONE	58
922.0100	TEMPORARY CONSTRUCTION SIGNS STANDARD 29.1.0 AND 27.1.1	58
923.0105	DRUM BARRICADE STANDARD 26.2.0	59
923.0125	PLASTIC PIPE TYPE III BARRICADE STANDARD 26.3.1	59
923.0200	FLUORESCENT TRAFFIC CONES STANDARD 26.1.0	59
929.0110	FIELD OFFICE	59
932.0200	FULL-DEPTH SAWCUT OF BITUMINOUS PAVEMENT	59
936.0110	MOBILIZATION	60
937.0200	MAINTENANCE AND MOVEMENT TRAFFIC PROTECTION	61
942.0100	DETECTABLE WARNING SYSTEMS STANDARD 48.1.0	61
943.0200	TRAINEE MAN-HOURS	61

Table of Contents - Distribution of Quantities

Project Name - Trestle Trail - East Section
Estimate Name - Addendum No. 3
R.I. Contract No. - 2013-CH-018
FAP Nos: HPP-4865(001)

ItemCode	Description	Page
L01.0102	LOAM BORROW 4 INCHES DEEP	61
L02.0102	RESIDENTIAL SEEDING (TYPE 2)	62
L05.0502	ADHESIVE MULCH STABILIZER	62
L05.9901	EQUESTRIAN TRAIL SLOPE STABILIZATION WITH GRID AND WOOD DEFLECTOR	62
L06.9901	AMELANCHIER GRANDIFLORA 'AUTUMN BRILLIANCE' #7 CONT.	63
L06.9902	ACER RUBRUM 'RED SUNSET' 2/2.5" CAL.	63
L06.9903	ACER SACCHARUM 'GREEN MOUNTAIN' 2.5/3' B&B	64
L06.9904	CLETHRA ALNIFOLIA #3 CONT.	64
L06.9905	CORNUS AMOMUM #2 CONT.	64
L06.9906	EUPATORIUM MACULATUM #1 CONT.	64
L06.9907	EUPATORIUM PERFOLIATUM #1 CONT.	64
L06.9908	HAMAMELIS VIRGINIANA 3/4' B&B	65
L06.9909	ILEX VERTICILLATA FEMALE 3/4' B&B	65
L06.9910	ILEX VERTICILLATA MALE 3/4" B&B	65
L06.9911	JUNIPERUS VIRGINIANA 6/7' B&B	65
L06.9912	MYRICA PENSYLVANICA 2.5/3' B&B	66
L06.9913	NYSSA SYLVATICA 2/2.5" CAL.	66
L06.9914	PICEA ABIES 7/8' B&B	66
L06.9915	PINUS STROBUS 7/8' B&B	66
L06.9917	QUERCUS BICOLOR 2.5/3" CAL.	67
L06.9918	QUERCUS COCCINEA 2/2.5" CAL.	67
L06.9919	RHUS COPALLINA #3 CONT.	67
L06.9920	SOLIDAGO 'FIREWORKS' #1 CONT.	67
L06.9921	ULMUS X 'HOMESTEAD' 2/2.5" CAL.	67
L06.9922	VACCINIUM ANGUSTIFOLIUM #1 CONT.	68
L06.9923	VACCINIUM CORYMBOSUM #5 CONT.	68
L06.9924	VIBURNUM DETATUM 3/4' B&B	68
L06.9925	VIBURNUM LENTAGO 3/4' B&B	69
L09.0106	SELECTIVE CLEARING	69
L10.0101	MECHANICAL TREE AND SHRUB ROOT PRUNING	69
L11.0104	DRIP-LINE TREE PROTECTION DEVICE STANDARD 51.1.1	69
L15.9901	FURNISH AND INSTALL 6' RECYCLED PLASTIC LUMBER BENCH	69
T14.9901	FURNISH AND INSTALL EARLY WARNING SYSTEM	70
T15.0100	DIRECTIONAL REGULATORY AND WARNING SIGNS	70
T15.1000	STREET SIGN ASSEMBLY STD. 24.6.1	73
T15.9901	BIKEWAY AND EQUESTRIAN TRAIL ENTRANCE SIGN - RIDEM	73
T15.9902	TRESTLE TRAIL EQUESTRIAN PARKING LOT SIGN - RIDEM	73
T15.9903	CANOE PORTAGE PARKING ONLY SIGN	74
T15.9904	CAR PARKING ONLY SIGN	74
T15.9905	EQUESTRIAN PARKING ONLY SIGN	74
T15.9906	HANDICAP PARKING ONLY	74
T15.9908	YEILD TO SIGN	74
T15.9909	TRAIL HEAD SIGN (SP-T1)	75
T15.9910	WELCOME TO THE TRESTLE TRAIL SIGN	75
T19.9901	MILEPOST MARKER	75
T20.2004	4 INCH EPOXY RESIN PAVEMENT MARKINGS WHITE	76
T20.2006	**6 INCH EPOXY RESIN PAVEMENT MARKINGS WHITE**	**76**
T20.2012	**12 INCH EPOXY RESIN PAVEMENT MARKINGS WHITE**	**77**
T20.2014	4 INCH EPOXY RESIN PAVEMENT MARKINGS YELLOW	78
T20.9901	EPOXY RESIN PAVEMENT MARKINGS WORD "STOP AHEAD"	79
T20.9902	EPOXY RESIN PAVEMENT MARKINGS WORD 'YIELD'	79
T20.9903	EPOXY RESIN PAVEMENT MARKING SYMBOL WHITE 'YIELD' (SHARK TEETH)	80
T20.9904	EPOXY RESIN PAVEMENT MARKING "BIKE XING"	80
T20.9905	EPOXY RESIN PAVEMENT MARKING HANDICAP PARKING SYMBOL	80

Table of Contents - Distribution of Quantities

Project Name - Trestle Trail - East Section
Estimate Name - Addendum No. 3
R.I. Contract No. - 2013-CH-018
FAP Nos: HPP-4865(001)

ItemCode	Description	Page
T20.9906	EPOXY RESIN PAVEMENT MARKINGS "EQUESTRIAN XING"	80
T20.9907	EPOXY RESIN PAVEMENT MARKING WORD "YIELD AHEAD"	81
T20.9908	EPOXY RESIN PAVEMENT MARKING AT EQUESTRIAN CROSSING	81
202.9903	**ROCK EXCAVATION - CONTROLLED BLASTING**	**81**
205.0240	TRENCH ROCK EXCAVATION (0-7')	85
206.0208	REMOVAL OF BALED HAY EROSION CHECKS	86
817.9901	REPAIRS TO STRUCTURAL CONCRETE MASONRY WITH INTEGRALLY COLORED PATCHING MORTAR AND/OR WITH INTEGRALLY COLORED CONCRETE - FLAT RIVER RESERVOIR BRIDGE NO. 1124	87
817.9904	REPAIRS TO STRUCTURAL CONCRETE MASONRY WITH INTEGRALLY COLORED PATCHING MORTAR AND/OR WITH INTEGRALLY COLORED CONCRETE - QUIDNICK RESERVOIR BRIDGE NO. 1128	87
906.0120	GRANITE WHEELCHAIR RAMP CURB STANDARDS 7.3.3, 43.3.0 AND 43.3.1	87
906.0131	GRANITE RAMP STONE CIRCULAR STANDARD 7.3.9	87
T20.0006	**6 INCH WHITE FAST - DRYING WATERBORNE PAVEMENT MARKING PAINT**	**88**
T20.0012	**12 INCH WHITE FAST - DRYING WATERBORNE PAVEMENT MARKING PAINT**	**88**
T20.0104	**4 INCH YELLOW FAST - DRYING WATERBORNE PAVEMENT MARKING PAINT**	**88**
T20.9924	**24 INCH EPOXY RESIN PAVEMENT MARKINGS WHITE**	**88**

Distribution of Quantities

Project Name - Trestle Trail - East Section
Estimate Name - Addendum No. 3
R.I. Contract No. - 2013-CH-018
FAP Nos: HPP-4865(001)

Item No.	Item Code	Description	UM	Qty.	Pay Code	Seq. No.
017	201.9907 Cont.	Item 201.9907 Total:		2.00		
018	202.0100	EARTH EXCAVATION	CY			
		ACRES OF PINE ROAD				
		BEGIN TO END		23.00	0028	01
		BIKEWAY				
		EXCAVATION OF CONTAMINATED		2,235.00	0028	01
		SOIL				
		LESS ITEM 202.9903		-4,740.00	0028	01
		LESS ITEM 202.9904		-1,213.00	0028	01
		STA 500+00 TO 700+00		15,486.00	0028	01
		STA 700+00 TO 768+93		6,025.00	0028	01
		CAMP WESTWOOD ROAD				
		BEGIN TO END		227.00	0028	01
		HILL FARM ROAD				
		BEGIN TO END		1,376.00	0028	01
		LOG BRIDGE ROAD				
		BEGIN TO END		973.00	0028	01
		PHILLIPS HILL ROAD				
		BEGIN TO END		435.00	0028	01
		PINE HAVEN ROAD				
		BEGIN TO END		879.00	0028	01
		Item 202.0100 Total:		21,706.00		
019	202.0201	ROCK EXCAVATION MECHANICAL	CY			
		BIKEWAY				
		HILL FARM ROAD - EQUESTRIAN		2.00	0028	01
		PARKING LOT				
		LESS ITEM CODE 202.0201		-1,120.00	0028	01
		STA 509+67.53 TO 509+97.13		8.00	0028	01
		STA 509+97.13 TO 510+00		2.00	0028	01
		STA 510+00 TO 510+50		30.00	0028	01
		STA 510+50 TO 511+00		39.00	0028	01

Distribution of Quantities

Project Name - Trestle Trail - East Section
Estimate Name - Addendum No. 3
R.I. Contract No. - 2013-CH-018
FAP Nos: HPP-4865(001)

Item No.	Item Code	Description	UM	Qty.	Pay Code	Seq. No.
019	202.0201 Cont.	STA 707+50 TO 708+00		62.00	0028	01
		STA 708+00 TO 708+50		30.00	0028	01
		STA 708+50 TO 709+00		31.00	0028	01
		STA 709+00 TO 709+50		37.00	0028	01
		STA 709+50 TO 710+00		39.00	0028	01
		STA 710+00 TO 710+50		48.00	0028	01
		STA 710+50 TO 711+00		47.00	0028	01
		STA 711+00 TO 711+50		50.00	0028	01
		STA 711+50 TO 712+00		68.00	0028	01
		STA 712+00 TO 712+50		86.00	0028	01
		STA 712+50 TO 713+00		89.00	0028	01
		STA 713+00 TO 713+50		81.00	0028	01
		STA 713+50 TO 714+00		62.00	0028	01
		STA 714+00 TO 714+50		40.00	0028	01
		STA 714+50 TO 715+00		53.00	0028	01
		STA 715+00 TO 715+50		64.00	0028	01
		STA 715+50 TO 716+00		65.00	0028	01
		STA 716+00 TO 716+50		34.00	0028	01
		Item 202.0201 Total:		**DELETED**		
020	202.0700	COMMON BORROW	CY			
		BIKEWAY				
		CAMP WESTWOOD RD		14.00	0028	01
		CONTAMINATED SOIL AREAS		2,235.00	0028	01
		HILL FARM RD		32.00	0028	01
		PHILLIPS RD		78.00	0028	01
		PINE HAVEN RD		10.00	0028	01
		STA 500+00 TO 685+64.91		8,432.00	0028	01
		STA 700+00 TO 768+92		2,770.00	0028	01
		Item 202.0700 Total:		13,571.00		
021	202.9901	STONE DUST 4" DEEP	CY			
		EQUESTRIAN TRAIL				

Distribution of Quantities

Project Name - Trestle Trail - East Section
Estimate Name - Addendum No. 3
R.I. Contract No. - 2013-CH-018
FAP Nos: HPP-4865(001)

Item No.	Item Code	Description	UM	Qty.	Pay Code	Seq. No.
030	211.0100 Cont.	LOG BRIDGE ROAD		266.00	0028	01
		PINE HAVEN ROAD		266.00	0028	01
		Item 211.0100 Total:		**1,330.00**		
031	212.2000	**CLEANING AND MAINTENANCE OF EROSION CONTROLS**	**LS**			
		BIKEWAY				
		AS REQUIRED		1.00	0028	01
		Item 212.2000 Total:		**1.00**		
032	302.0100	**GRAVEL BORROW SUBBASE COURSE**	**CY**			
		BIKEWAY				
		AS REQUIRED FOR CUT AREAS		2,473.00	0028	01
		FROM CODE 401.9901		4,966.00	0028	01
		CANOE PORTAGE				
		PARKING & DRIVE		75.00	0028	01
		CANOE PORTAGE PATH				
		PATH		20.00	0028	01
		DRIVEWAYS				
		DRIVEWAYS		20.00	0028	01
		FROM CODE 905.0115		22.00	0028	01
		EQUESTRIAN TRAIL				
		STA 500+00 TO 501+50		11.00	0028	01
		STA 501+50 TO 504+00		37.00	0028	01
		STA 504+00 TO 510+50		48.00	0028	01
		STA 530+00 TO 546+00		119.00	0028	01
		STA 546+00 TO 552+00		89.00	0028	01
		STA 552+00 TO 557+00		139.00	0028	01
		STA 557+00 TO 580+00		213.00	0028	01
		STA 580+00 TO 586+00		167.00	0028	01
		STA 586+00 TO 596+00		93.00	0028	01
		STA 596+00 TO 598+50		69.00	0028	01
		STA 598+50 TO 603+50		56.00	0028	01

Distribution of Quantities

Project Name - Trestle Trail - East Section
Estimate Name - Addendum No. 3
R.I. Contract No. - 2013-CH-018
FAP Nos: HPP-4865(001)

Item No.	Item Code	Description	UM	Qty.	Pay Code	Seq. No.
032	302.0100 Cont.	STA 603+75 TO 612+42		96.00	0028	01
		STA 621+95 TO 624+52		71.00	0028	01
		STA 650+14 TO 652+50		66.00	0028	01
		STA 652+50 TO 655+32		26.00	0028	01
		STA 670+50 TO 680+90		116.00	0028	01
		STA 681+45 TO 686+59		57.00	0028	01
		STA 707+00 TO 716+50		422.00	0028	01
		STA 716+50 TO 718+00		22.00	0028	01
		STA 718+00 TO 721+25		36.00	0028	01
		STA 722+30 TO 728+90		73.00	0028	01
		STA 729+07 TO 732+50		32.00	0028	01
		STA 732+50 TO 734+50		67.00	0028	01
		STA 734+50 TO 738+25		42.00	0028	01
		STA 738+25 TO 741+94		55.00	0028	01
		STA 742+18 TO 744+00		20.00	0028	01
		STA 744+00 TO 746+69		40.00	0028	01
		STA 746+93 TO 747+83		13.00	0028	01
		STA 747+83 TO 748+59		20.00	0028	01
		STA 748+59 TO 751+09		37.00	0028	01
		ROADWAYS / STREETS / PARKING LOTS				
		FROM CODE 401.9901		2,125.00	0028	01
		SIDEWALK AREAS				
		FROM CODE 905.0110		323.00	0028	01
		Item 302.0100 Total:		**12,376.00**		
033	401.9901	**BITUMINOUS BASE COURSE, CLASS 19**	**TON**			
		BIKEWAY				
		STA 500+00 - 502+00		61.00	0028	01
		STA 502+97 - 509+64		138.00	0028	01
		STA 509+64 - 548+23		729.00	0028	01

Distribution of Quantities

Project Name - Trestle Trail - East Section
Estimate Name - Addendum No. 3
R.I. Contract No. - 2013-CH-018
FAP Nos: HPP-4865(001)

Item No.	Item Code	Description	UM	Qty.	Pay Code	Seq. No.
183	T19.9901 Cont.	STA 529+67 10' RT		1.00	0028	01
		STA 556+07 9.5' RT		1.00	0028	01
		STA 582+47 14' RT		1.00	0028	01
		STA 608+87 9' RT		1.00	0028	01
		STA 635+27 9' RT		1.00	0028	01
		STA 661+67 9.5' LT		1.00	0028	01
		STA 702+42 11' RT		1.00	0028	01
		STA 728+82 9' LT		1.00	0028	01
		STA 755+22 9' RT		1.00	0028	01
		Item T19.9901 Total:		**10.00**		
S184	T20.2004	**4 INCH EPOXY RESIN PAVEMENT MARKINGS WHITE**	**LF**			
		BIKEWAY				
		STA 501+67 TO 502+67 LT & RT		200.00	0028	01
		STA 503+02 TO 504+02 LT & RT		200.00	0028	01
		STA 547+16 TO 548+16 LT & RT		200.00	0028	01
		STA 548+53 TO 549+53 LT & RT		200.00	0028	01
		STA 570+33 TO 571+09 LT & RT		152.00	0028	01
		STA 580+22 TO 581+27 LT & RT		210.00	0028	01
		STA 603+28 TO 603+91 LT & RT		126.00	0028	01
		STA 680+65 TO 768+93 LT & RT		17,656.00	0028	01
		PARKING LOTS				
		HILL FARM ROAD		572.00	0028	01
		RAILROAD STREET		215.00	0028	01
		Item T20.2004 Total:		**19,731.00**		
S185	T20.2006	**6 INCH EPOXY RESIN PAVEMENT MARKINGS WHITE**	**LF**			
		CAMP WESTWOOD ROAD				
		LT & RT		280.00	0028	01
		HILL FARM ROAD				
		LT & RT		1,750.00	0028	01

Distribution of Quantities

Project Name - Trestle Trail - East Section
Estimate Name - Addendum No. 3
R.I. Contract No. - 2013-CH-018
FAP Nos: HPP-4865(001)

Item No.	Item Code	Description	UM	Qty.	Pay Code	Seq. No.
S185	T20.2006 Cont.	LOG BRIDGE ROAD				
		LT & RT		400.00	0028	01
		Item T20.2006 Total:		**2,430.00**		
S186	T20.2012	**12 INCH EPOXY RESIN PAVEMENT MARKINGS WHITE**	**LF**			
		ACRES OF PINE ROAD				
		AT RTE 117		26.00	0028	01
		CROSSWALK HATCHING			0028	01
		LEFT SIDE OF BIKEWAY		24.00	0028	01
		RIGHT SIDE OF BIKEWAY		24.00	0028	01
		BIKEWAY				
		STA 502+66		5.00	0028	01
		STA 503+01		5.00	0028	01
		STA 548+15		6.00	0028	01
		STA 548+53		6.00	0028	01
		STA 700+78		6.00	0028	01
		STA 701+23		6.00	0028	01
		STA 741+73		5.00	0028	01
		STA 742+07		5.00	0028	01
		STA 746+46		6.00	0028	01
		STA 746+81		6.00	0028	01
		CAMP WESTWOOD ROAD				
		CROSSWALK HATCHING			0028	01
		STA 10+69		25.00	0028	01
		STA 10+94		25.00	0028	01
		DRIVEWAY				
		CROSSWALK HATCHING			0028	01
		LEFT SIDE OF BIKEWAY		12.00	0028	01
		RIGHT SIDE OF BIKEWAY		12.00	0028	01
		HILL FARM ROAD				
		AT RTE 117		25.00	0028	01
		CROSSWALK HATCHING			0028	01

Distribution of Quantities

Project Name - Trestle Trail - East Section
Estimate Name - Addendum No. 3
R.I. Contract No. - 2013-CH-018
FAP Nos: HPP-4865(001)

Item No.	Item Code	Description	UM	Qty.	Pay Code	Seq. No.
S186	T20.2012 Cont.	STA 14+91		28.00	0028	01
		STA 15+16		28.00	0028	01
		LOG BRIDGE ROAD				
		CROSSWALK HATCHING			0028	01
		STA 10+00 TO 10+68 LT		216.00	0028	01
		STA 11+35		26.00	0028	01
		STA 11+54		26.00	0028	01
		PHILLIPS HILL ROAD				
		STA 10+24		18.00	0028	01
		STA 11+25 RT		12.00	0028	01
		PINE HAVEN ROAD				
		AT RTE 117		18.00	0028	01
		CROSSWALK HATCHING			0028	01
		LEFT SIDE OF BIKEWAY		25.00	0028	01
		RIGHT SIDE OF BIKEWAY		25.00	0028	01
		RAILROAD STREET				
		STA 11+15		9.00	0028	01
		Item T20.2012 Total:		**660.00**		
S187	T20.2014	**4 INCH EPOXY RESIN PAVEMENT MARKINGS YELLOW**	**LF**			
		ACRES OF PINE ROAD				
		APPROACH TO LOG BRIDGE ROAD		80.00	0028	01
		SOLID SINGLE LINE		118.00	0028	01
		BIKEWAY				
		STA 500+00 TO 686+59		4,665.00	0028	01
		STA 700+00 TO 768+94		1,724.00	0028	01
		CAMP WESTWOOD ROAD				
		SOLID DOUBLE LINE		278.00	0028	01
		SOLID SINGLE LINE		80.00	0028	01
		CANOE PORTAGE				
		CENTER LINE		38.00	0028	01
		DRIVEWAY				

Distribution of Quantities

Project Name - Trestle Trail - East Section
Estimate Name - Addendum No. 3
R.I. Contract No. - 2013-CH-018
FAP Nos: HPP-4865(001)

Item No.	Item Code	Description	UM	Qty.	Pay Code	Seq. No.
S193	T20.9906 Cont.	**"EQUESTRIAN XING"**				
		BIKEWAY				
		STA. 510+00		2.00	0028	01
		STA. 668+50		2.00	0028	01
		Item T20.9906 Total:		**4.00**		
S194	T20.9907	**EPOXY RESIN PAVEMENT MARKING WORD "YIELD AHEAD"**	**EACH**			
		BIKEWAY				
		STA 728+25		1.00	0028	01
		STA 729+50		1.00	0028	01
		Item T20.9907 Total:		**2.00**		
S195	T20.9908	**EPOXY RESIN PAVEMENT MARKING AT EQUESTRIAN CROSSING**	**SF**			
		BIKEWAY				
		STA 510+00		80.00	0028	01
		STA 668+50		96.00	0028	01
		Item T20.9908 Total:		**176.00**		
196	202.9903	**ROCK EXCAVATION - CONTROLLED BLASTING**	**CY**			
		BIKEWAY				
		ADDITIONAL ROCK EXCAVATION UNDER EQUESTRIAN TRAIL		630.00	0028	01
		HILL FARM ROAD - EQUESTRIAN PARKING LOT		2.00	0028	01
		LESS ITEM CODE 205.0240		-1,213.00	0028	01
		STA 509+67.53 TO 509+97.13		8.00	0028	01
		STA 509+97.13 TO 510+00		2.00	0028	01
		STA 510+00 TO 510+50		30.00	0028	01
		STA 510+50 TO 511+00		39.00	0028	01
		STA 511+00 TO 511+50		50.00	0028	01

Distribution of Quantities

Project Name - Trestle Trail - East Section
Estimate Name - Addendum No. 3
R.I. Contract No. - 2013-CH-018
FAP Nos: HPP-4865(001)

Item No.	Item Code	Description	UM	Qty.	Pay Code	Seq. No.
196	202.9903 Cont.	STA 511+50 TO 512+00		44.00	0028	01
		STA 512+00 TO 512+50		45.00	0028	01

Distribution of Quantities

Project Name - Trestle Trail - East Section
Estimate Name - Addendum No. 3
R.I. Contract No. - 2013-CH-018
FAP Nos: HPP-4865(001)

Item No.	Item Code	Description	UM	Qty.	Pay Code	Seq. No.
196	202.9903 Cont.	STA 709+00 TO 709+50		37.00	0028	01
		STA 709+50 TO 710+00		39.00	0028	01
		STA 710+00 TO 710+50		48.00	0028	01
		STA 710+50 TO 711+00		47.00	0028	01
		STA 711+00 TO 711+50		50.00	0028	01
		STA 711+50 TO 712+00		68.00	0028	01
		STA 712+00 TO 712+50		86.00	0028	01
		STA 712+50 TO 713+00		89.00	0028	01
		STA 713+00 TO 713+50		81.00	0028	01
		STA 713+50 TO 714+00		62.00	0028	01
		STA 714+00 TO 714+50		40.00	0028	01
		STA 714+50 TO 715+00		53.00	0028	01
		STA 715+00 TO 715+50		64.00	0028	01
		STA 715+50 TO 716+00		65.00	0028	01
		STA 716+00 TO 716+50		34.00	0028	01
		Item 202.9903 Total:		**5,277.00**		
197	205.0240	**TRENCH ROCK EXCAVATION (0-7')**	**CY**			
		BIKEWAY				
		509+67.53 TO 509+97.13		8.00	0028	01
		509+97.13 TO 510+00		2.00	0028	01
		510+00 TO 510+50		28.00	0028	01
		510+50 TO 511+00		34.00	0028	01
		511+00 TO 511+50		43.00	0028	01
		511+50 TO 512+00		40.00	0028	01
		512+00 TO 512+50		37.00	0028	01
		512+50 TO 513+00		37.00	0028	01
		513+00 TO 513+10.87		8.00	0028	01
		513+10.87 TO 513+50		29.00	0028	01
		513+50 TO 514+00		37.00	0028	01
		514+00 TO 514+50		32.00	0028	01
		514+50 TO 515+00		26.00	0028	01
		515+00 TO 515+50		27.00	0028	01

Distribution of Quantities

Project Name - Trestle Trail - East Section
Estimate Name - Addendum No. 3
R.I. Contract No. - 2013-CH-018
FAP Nos: HPP-4865(001)

Item No.	Item Code	Description	UM	Qty.	Pay Code	Seq. No.
202	906.0131 Cont.	PHILLIPS HILL ROAD				
		STA 10+20 RT		1.00	0028	01
		STA 11+10 RT		1.00	0028	01
		Item 906.0131 Total:		**2.00**		
S203	T20.0006	**6 INCH WHITE FAST - DRYING WATERBORNE PAVEMENT MARKING PAINT**	LF			
		HILL FARM ROAD TEMPOARY EDGE LINES				
		FROM CODE T20.2005		3,500.00	0028	01
		Item T20.0006 Total:		**3,500.00**		
S204	T20.0012	**12 INCH WHITE FAST - DRYING WATERBORNE PAVEMENT MARKING PAINT**	LF			
		HILL FARM ROAD				
		TEMP. STOP BAR @ RTE 117		50.00	0028	01
		PHILIPS HILL ROAD				
		TEMP. STOP BAR @ HILL FARM RD		40.00	0028	01
		Item T20.0012 Total:		**90.00**		
S205	T20.0104	**4 INCH YELLOW FAST - DRYING WATERBORNE PAVEMENT MARKING PAINT**	LF			
		HILL FARM ROAD				
		TEMPORARY CENTERLUNE		3,790.00	0028	01
		PHILIPS HILL ROAD				
		TEMPOARY CENTERLINE		660.00	0028	01
		Item T20.0104 Total:		**4,450.00**		
S206	T20.9924	**24 INCH EPOXY RESIN PAVEMENT MARKINGS WHITE**	LF			
		CROSSWALKS				
		ACRES OF PINE ROAD		96.00	0028	01
		CAMP WESTWOOD ROAD		144.00	0028	01

Distribution of Quantities

Project Name - Trestle Trail - East Section
Estimate Name - Addendum No. 3
R.I. Contract No. - 2013-CH-018
FAP Nos: HPP-4865(001)

Item No.	Item Code	Description	UM	Qty.	Pay Code	Seq. No.
S206	T20.9924 Cont.	DRIVEWAY @ STA 728+25		48.00	0028	01
		HILL FARM ROAD		144.00	0028	01
		LOG BRIDGE ROAD		120.00	0028	01
		PINE HAVEN ROAD		120.00	0028	01
		Item T20.9924 Total:		**672.00**		

FED. ROAD DIV. NO.	STATE	FEDERAL AID PROJECT NO.	FISCAL YEAR	SHEET NO.	TOTAL SHEETS
	RI			7	150

R-2

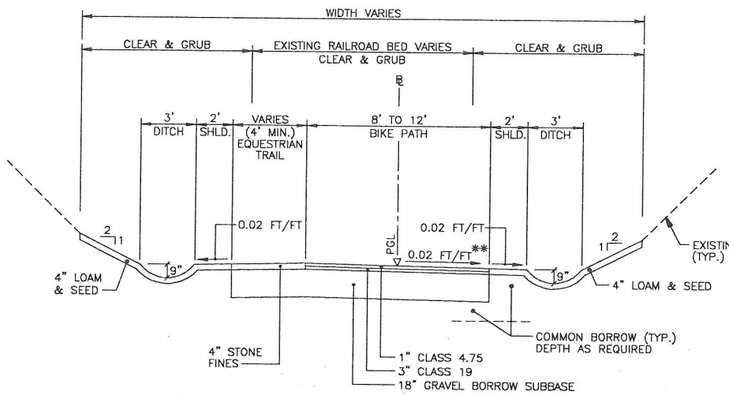

NOTES:
1. WHEN PLANTING GRASS USE ADHESIVE MULCH STABILIZER ON SIDE SLOPES OF 1:3 OR GREATER.
2. SEE GENERAL PLANS FOR LOCATION OF UNDERDRAIN.
3. A SIDE SLOPE OF 1:1.5 MAY BE USED IN AREAS WHERE SLOPE LIMIT IS RESTRICTED.
4. ℄ AND PGL ARE NOT NECESSARILY CENTERLINE OF PATH.

SHARED-USE PATH AND EQUESTRIAN TRAIL
(NORMAL CUT SECTION)
SCALE: 1/4" = 1'-0"

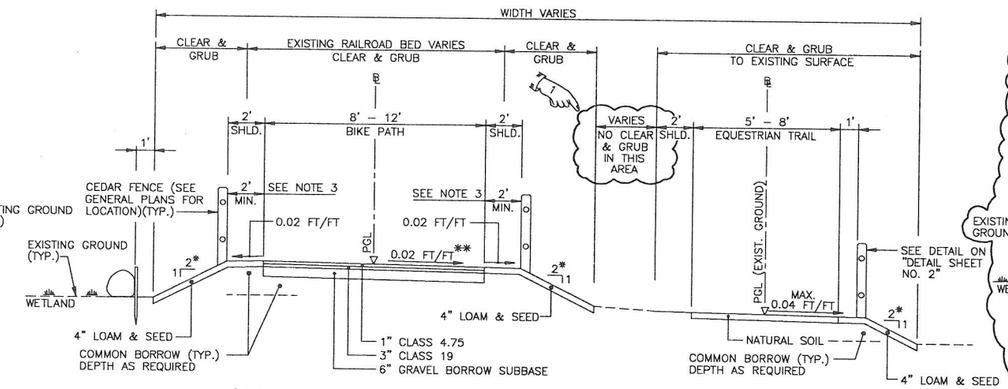

* A MAX. SLOPE OF 1:1.5 MAY BE USED IN AREAS WHERE A STEEPER SLOPE IS REQUIRED TO MINIMIZE DISTURBANCE TO A REGULATED AREA.

NOTES:
1. WHEN PLANTING GRASS USE ADHESIVE MULCH STABILIZER ON SIDE SLOPES OF 1:3 OR GREATER.
2. ℄ AND PGL ARE NOT NECESSARILY CENTERLINE OF PATH.
3. 1 FT. MIN. WHERE PATH CROSSES EXISTING CULVERTS.

SHARED-USE PATH AND EQUESTRIAN TRAIL
(FILL SECTION)
SCALE: 1/4" = 1'-0"

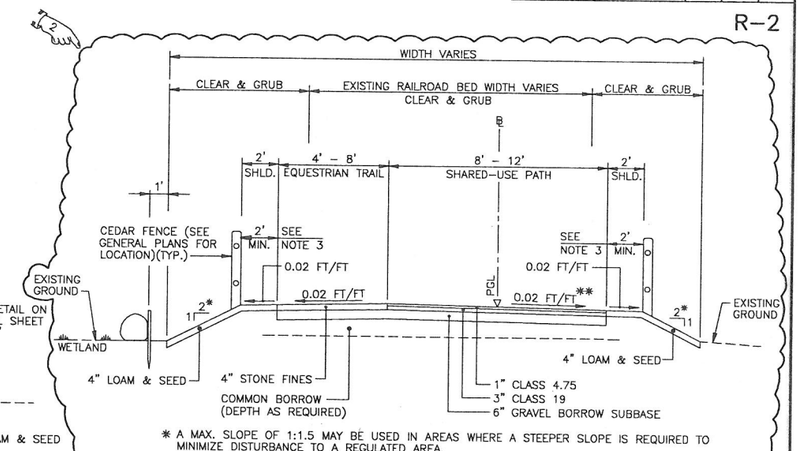

* A MAX. SLOPE OF 1:1.5 MAY BE USED IN AREAS WHERE A STEEPER SLOPE IS REQUIRED TO MINIMIZE DISTURBANCE TO A REGULATED AREA.

NOTES:
1. WHEN PLANTING GRASS USE ADHESIVE MULCH STABILIZER ON SIDE SLOPES OF 1:3 OR GREATER.
2. ℄ AND PGL ARE NOT NECESSARILY CENTERLINE OF PATH.
3. 1 FT. MIN. WHERE PATH CROSSES EXISTING CULVERTS.

SHARED-USE PATH AND EQUESTRIAN TRAIL
(NORMAL FILL SECTION)
SCALE: 1/4" = 1'-0"

**SHARED-USE PATH SLOPE DIRECTION

2% SLOPE TO LEFT	2% SLOPE TO RIGHT
(STA. 502+00 – STA. 510+50)	(STA. 500+00 – STA. 501+50)
(STA. 552+00 – STA. 559+50)	(STA. 511+00 – STA. 551+50)
(STA. 572+50 – STA. 586+50)	(STA. 560+00 – STA. 572+00)
(STA. 594+00 – STA. 595+50)	(STA. 587+00 – STA. 593+50)
(STA. 644+50 – STA. 654+00)	(STA. 596+00 – STA. 644+00)
(STA. 683+00 – STA. 685+64.91)	(STA. 654+25 – STA. 682+50)
(STA. 700+00 – STA. 729+00)	(STA. 729+50 – STA. 736+50)
(STA. 737+00 – STA. 747+00)	(STA. 747+25 – END PROJECT)

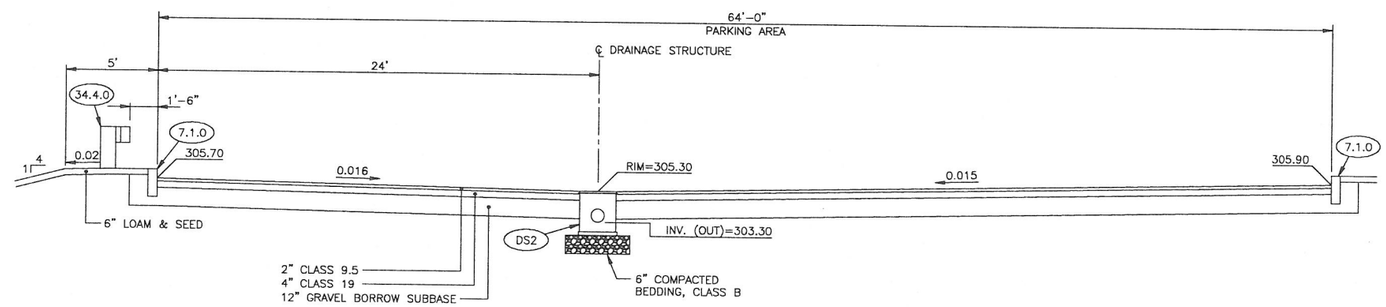

PAVED PARKING LOT AT HILL FARM ROAD
(SECTION THRU BASIN)
SCALE: 1/4" = 1'-0"

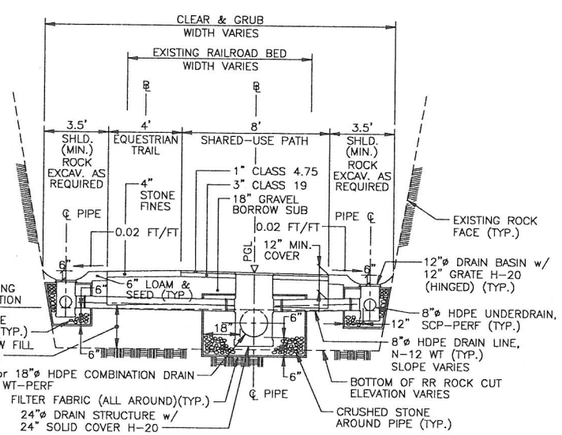

NOTES:
1. SEE GENERAL PLAN AND PROFILE SHEETS FOR DRAIN STRUCTURE LOCATIONS AND PIPE INVERTS.
2. DRAINAGE STRUCTURES, COVERS AND GRATES AS MANUFACTURED BY ADS OR APPROVED EQUAL.
3. COMBINATION DRAIN, UNDERDRAIN AND DRAIN LINES AS MANUFACTURED BY ADS OR APPROVED EQUAL.

SHARED-USE PATH AND EQUESTRIAN TRAIL
(ROCK CUT SECTION)
SCALE: 1/4" = 1'-0"

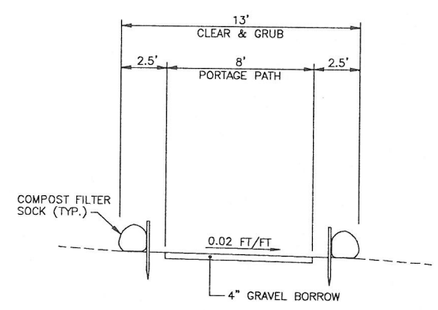

CANOE PORTAGE PATH
SCALE: 1/4" = 1'-0"

TABLE – EQUESTRIAN TRAIL SURFACE MATERIAL

4" STONE FINES:	NATURAL SURFACE:
STA. 500+00 TO STA. 612+42	STA. 612+42 TO STA. 614+18
STA. 614+18 TO STA. 614+95	STA. 614+95 TO STA. 621+95
STA. 621+95 TO STA. 625+04	STA. 625+04 TO STA. 628+34
STA. 628+34 TO STA. 629+11	STA. 629+11 TO STA. 633+06
STA. 633+06 TO STA. 633+52	STA. 633+52 TO STA. 643+23
STA. 643+23 TO STA. 644+18	STA. 644+18 TO STA. 650+14
STA. 650+14 TO STA. 655+48	STA. 655+48 TO STA. 664+75
STA. 664+75 TO STA. 665+66	STA. 665+66 TO STA. 666+40
STA. 666+40 TO STA. 667+78	STA. 667+78 TO STA. 669+00
STA. 668+91 TO STA. 669+74	STA. 669+74 TO STA. 671+00
STA. 670+98 TO STA. 686+58.57	STA. 751+00 TO STA. 768+08
STA. 700+00 TO STA. 751+09	
STA. 768+08 TO STA. 769+09.24	

REVISIONS		
NO.	DATE	BY
1	5/10/13	MW
2	5/15/13	MW

RHODE ISLAND
DEPARTMENT OF ENVIRONMENTAL MANAGEMENT

TRESTLE TRAIL SHARED-USE PATH
EAST
LOG BRIDGE ROAD (SUMMIT) TO TOWN FARM ROAD (NEAR)
COVENTRY, RHODE ISLAND

TYPICAL SECTIONS NO. 1

PRIME Engineering, Inc.
392 Wampanoag Trail, East Providence, RI 02915
Tel: 401.233.2993 Fax: 401.383.0773

CHECKED BY PEI DATE MAR 2013 SCALE AS NOTED