December 4, 2012

STATE OF RHODE ISLAND AND PROVIDENCE PLANTATION
DEPARTMENT OF TRANSPORTATION

RHODE ISLAND CONTRACT NO.2013-CH-004

FEDERAL-AID PROJECT NO. FAP Nos: 405-421-633, 405-421-634, BRO-1954(075)

I-195 Relocation - Contract 14(West side city streets)

Dyer Street from Eddy to Peck Streets
Dorrance Street from Clifford to Dyer Streets
Eddy Street from Dyer to Richmond Streets
Point Street from Hospital Street to the Providence River
Clifford Street from East Franklin to Dyer Streets
Friendship Street from East Franklin to Richmond Streets
Chestnut Street from Pine to Clifford Streets
Richmond Street from Friendship to Ship Streets
Claverick Street from Clifford to Friendship Streets

CITY/TOWN OF Providence

COUNTY OF PROVIDENCE

NOTICE TO PROSPECTIVE BIDDERS

ADDENDUM NO. 4 Prospective bidders and all concerned are hereby notified of the following changes in the Plans, Specifications, Proposal and Distribution of Quantities for this contract. These changes shall be incorporated in the Plans, Specifications, Proposal and Distribution of Quantities, and shall become an integral part of the Contract Documents.

A. Contract Documents

1. CS Appendix I Page 3, Page 4 and Page 14

   Delete pages CS Appendix I Pages 3, 4 and 14 in their entirety and replace them with CS Appendix I 3(R-1), 4(R-1) and 14(R-1) attached to this Addendum No. 4. The backwash discharge requirements have been revised.

B. Specification Change/Addition

1. Index Page v(R-2)

   Delete Index Page v(R-2) in its entirety and replace it with Index Page v(R-3) attached to this Addendum No. 4. Section T06 - Conduit has been added to the index.

2. Pages JS-63, JS-64, JS-65 and JS-66

   Delete Pages JS-63, JS-64, JS-65 and JS-66 in their entirety and replace them with pages JS-63(R-1), JS-64(R-1), JS-65(R-1) and JS-66(R-1) attached to this Addendum No. 4. The specification has been revised.

3. Page JS-292

   Add Page JS-292 attached to this Addendum No. 4. Section T06 - Conduit has been added.

C. Distribution of Quantities

1. DOQ Index Page 4

   Delete Index Page 4 in its entirety and replace it with Index Page 4(R-1) attached to this Addendum No. 4. The Title for Item Code 702.9909 has been revised.

2. DOQ Index Page 7

   Delete Index Page 7 in its entirety and replace it with Index Page 7(R-1) attached to this Addendum No. 4. Item Codes T06.9901, T06.9902 and T06.9903 have been deleted.

3. DOQ Index Page 8

   Delete Index Page 8 in its entirety and replace it with Index Page 8(R-1) attached to this Addendum No. 4. Item Codes 702.9950, 702.9951, T06.5130, T06.5230 and T06.5430 have been added to the end of the Index.

4. DOQ Page 140

   Delete page 140 in its entirety and replace it with page 140(R-1) attached to this Addendum No. 4. Item Code 702.0207 has been revised.

5. DOQ Pages 148 and 149

   Delete pages 148 and 149 in their entirety and replace them with pages 148(R-1) and 149(R-1) attached to this Addendum No. 4. Item Code 702.0630 has been revised.

6. DOQ Page 154

   Delete page 154 in its entirety and replace it with page 154(R-1) attached to this Addendum No. 4. The title for Item Code 702.9909 has been revised.

7. DOQ Page 166

   Delete page 166 in its entirety and replace it with page 166(R-1) attached to this Addendum No. 4. Item Code 704.0200 has been revised.

8. DOQ Pages 177, 179 and 180

   Delete pages 177, 179 and 180 in their entirety and replace them with pages 177(R-1), 179 (R-1) and 180(R-1) attached to this Addendum No. 4. Item Code 707.1000 has been revised.

9. DOQ Pages 286, 287 and 288

   Delete pages 286, 287 and 288 in their entirety and replace them with pages 286(R-1), 287(R-1) and 288(R-1) attached to this Addendum No. 4. Item Codes T06.9901, T06.9902 and T06.9903 have been deleted. These items are replaced by Item Codes T06.5130, T06.5230 and T06.5430. These items are added to the end of the DOQ.

10. DOQ Pages 302, 303, 307 and 308

    Delete pages 302, 303, 307 and 308 in their entirety and replace them with pages 302(R-1), 303(R-1), 307(R-1) and 308(R-1) attached to this Addendum No. 4. Item Code T15.1000 has been revised.

11. DOQ Pages 309 and 311

    Delete pages 309 and 311 in their entirety and replace them with pages 309(R-1) and 311(R-1) attached to this Addendum No. 4. Some of the sign numbers have been revised.

12. DOQ Page 334

    Delete page 334 in its entirety and replace it with pages 334(R-1) and page 335 attached to this Addendum No. 4. Item codes 702.9950 and 702.9951 have been added to the DOQ. The new items required the addition of a new page at the end of the DOQ.

13. DOQ Pages 336 and 337

    Add DOQ Pages 336 and 337 attached to this Addendum No. 4. Item Codes T06.5130, T06.5230 and T06.5430 have been added. The new items required the addition of new pages.

14. Sign Post Mounting Table

    Add the Sign Post Mounting Table, pages 1 – 10 attached to this Addendum No. 4 to the end of the Distribution of Quantities. The table provides the intended mounting for each sign.

D. Proposal Addition/Deletion

1. Proposal Pages P-56(R-3) and P-57(R-3)

   Delete Proposal Pages P-56(R-3) and P-57(R-3) and replace them with Proposal Pages P-56(R-4 and P-57(R-4) attached to this Addendum No. 4. The Addendum Date has been added. The Proposal Pages will be generated by the Quest Lite Program.

E. Drawings/Plans - Change/Addition

1. Sheet V1_047

   Delete Sheet V1_047 in its entirety and replace it with Sheet V1_047(R-1) attached to this Addendum No. 4. The Legend has been revised.

2. Sheet V1_048

   Delete Sheet V1_048 in its entirety and replace it with Sheet V1_048(R-1) attached to this Addendum No. 4. Callouts have been revised.

3. Sheet V1_049(R-1)

   Delete Sheet V1_049(R-1) in its entirety and replace it with Sheet V1_049(R-2) attached to this Addendum No. 4. Callouts have been revised.

4. Sheet V1_051

   Delete Sheet V1_051 in its entirety and replace it with Sheet V1_051(R-1) attached to this Addendum No. 4. Callouts have been revised.

5. Sheet V1_052

   Delete Sheet V1_052 in its entirety and replace it with Sheet V1_052(R-1) attached to this Addendum No. 4. Callouts have been revised.

6. Sheet V1_053

   Delete Sheet V1_053 in its entirety and replace it with Sheet V1_053(R-1) attached to this Addendum No. 4. Callouts have been revised.

7. Sheet V1_058

   Delete Sheet V1_058 in its entirety and replace it with Sheet V1_058(R-1) attached to this Addendum No. 4. Callouts have been revised.

8. Sheet V1_059

   Delete Sheet V1_059 in its entirety and replace it with Sheet V1_059(R-1) attached to this Addendum No. 4. Callouts have been revised.

9. Sheet V1_060(R-1)

   Delete Sheet V1_060(R-1) in its entirety and replace it with Sheet V1_060(R-2) attached to this Addendum No. 4. Callouts have been revised.

10. Sheet V1_078

    Delete Sheet V1_078 in its entirety and replace it with Sheet V1_078(R-1) attached to this Addendum No. 4. The details have been revised.

11. Sheet V1_151(R-1)

    Delete sheet V1_151(R-1) in its entirety and replace it with sheet V1_151(R-2) attached to this Addendum No. 4. The notes have been revised.

12. Sheet V1_152

    Delete Sheet V1_152 in its entirety and replace it with Sheet V1_152(R-1) attached to this Addendum No. 4. Callouts have been revised.

13. Sheet V1_156

    Delete Sheet V1_156 in its entirety and replace it with Sheet V1_156(R-1) attached to this Addendum No. 4. Callouts have been revised.

14. Sheet V1_158

    Delete Sheet V1_158 in its entirety and replace it with Sheet V1_158(R-1) attached to this Addendum No. 4. Callouts have been revised.

15. Sheet V1_159

    Delete Sheet V1_159 in its entirety and replace it with Sheet V1_159(R-1) attached to this Addendum No. 4. Callouts have been revised.

16. Sheet V1_165

    Delete Sheet V1_165 in its entirety and replace it with Sheet V1_165(R-1) attached to this Addendum No. 4. Callouts have been revised.

for Federal Highway Administration
Division Administrator

RI Department of Transportation
Chief Engineer

IV. DISCHARGE INFORMATION

a. Describe the discharge activities for which the owner/applicant is seeking coverage:
Excavation Dewatering

b. Provide the following information for each discharge:

Number of Discharge Points: Multiple Points - Contract 14 & Contract 15

Maximum Flow Rate (cubic feet per second): _____ Is the maximum flow a design value? Y X N__

Average Flow Rate (cubic feet per second): _____

c. Latitude and Longitude of the center of each outfall: pt. 1: long 71.403 lat. 41.815, pt.2 long._____ lat. _____, pt.3 long. _____ lat. _____, pt.4 long _____ lat _____, pt.5 long _____ lat _____, pt. 6 long _____ lat. _____.

d. If hydrostatic testing, total volume of the discharge (gallons): Not Applicable

e. Is the discharge intermittent X or seasonal___?

f. Expected dates of discharge (mm/dd/yy): Start: ____/____/____ End: ____/____/____

g. Based on the analysis of sample(s) of the untreated influent, the applicant must check the box of the sub-categories that the potential discharge falls within:

☐ A) Gasoline Only, ☐ B) Fuel Oils (and Other Oils) Sites, ☐ C) Petroluem Sites Containing Other Pollutants

☐ D) VOC Only Sites, ☐ E) VOC Sites Containing Other Contaminants ☐ F) Sites Containing Primarily Metals

☒ G) Contaminated Construction Dewatering,

☐ H) Aquifer Pump Testing, Well Development, or Rehabiliation of Contaminated Wells

☐ I) Hydrostatic Testing of Pipelines and Tanks ☐ J) Contaminated Sump Discharge

V. TREATMENT SYSTEM INFORMATION

a. **Attach a complete description of the treatment system including**: a flow schematic depicting all major control points (i.e., alarms, sensors, valves) and treatment units; design calculations on the expected treatment performance (i.e., removal efficiency, carbon consumption calculations) including unit height and surface area; and manufacturers' specifications on major components of the treatment system. Also provide a basis for all design calculations and properly reference all design assumptions in order for calculations to be replicated. Include a discussion on the need for iron treatment to address iron scaling and/or iron bacteria build-up. Plans and specifications on all treatment systems must be signed and certified by a professional engineer registered in the State of Rhode Island.

b. Identify each applicable treatment unit (check all that apply):
☐ Oil/Water Separator, ☒ Granular Activated Carbon, ☐ Air Stripping, ☐ U/V Oxidation, ☒ Iron Treatment,
☐ Filtration, ☒ Ion Exchange, ☒ Bag Filter, ☐ Equalization Tanks, ☐Chlorination, ☐ Dechlorination,
☒ Other (please specify): Frac Tanks and Holding Tank
If system consists of GAC or Ion Exchange, provide time to carbon or resin exhaustion (days): 40
If system consists of air stripping, provide air/water ratio:

c. Treatment System Design Flow (gpm): 50

d. Treatment System Maximum System Capacity (gpm): 50

e. Average Flow Rate of Treatment System (gpm): 35

f. Provide a description of chemical additives being used or planned to be used (attach MSDS sheets for each):
Not Applicable - no chemical additives are planned to be used.

VI. RECEIVING WATER INFORMATION

a. Identify the discharge pathway: ☒ Direct, ☐ Indirect, ☐ Storm Drain, ☐ River/brook, ☐ Wetlands,

☐ Other (describe): _____

b. Provide a narrative description of the discharge pathway, including the names of the receiving waters:

Treated construction dewatering fluids will be piped and discharged to the Providence River from each Contract. Back-wash water from the system will be collected in a holding tank, sampled, transported and discharged off-site at a licensed disposal facility.

c. Attach a detailed map(s) indicating the site location and location of the outfall to the receiving water:

1. For multiple discharges, number the discharges sequentially.

2. For indirect discharges, indicate the location of the discharge to the indirect conveyance and the discharge to surface waters. The map should include the location and distance to the nearest sanitary sewer.

d. Provide the Water Quality Classification of the receiving water: SB.

e. If the proposed discharge is to freshwaters, provide the reported or calculated seven day-ten year low flow (7Q10) of the receiving water for the point of discharge in cubic feet per second (cfs): _____. Attach any calculation sheets used to support stream flow and dilution calculations.

Not Applicable - discharge is to the Providence River

f. Is the receiving water a listed 303(d) water quality impaired or limited water? ☐ Yes ☒ No, If yes for which pollutant(s)?:

g. Is there a TMDL? ☐ Yes ☒ No If Yes, for which pollutants?

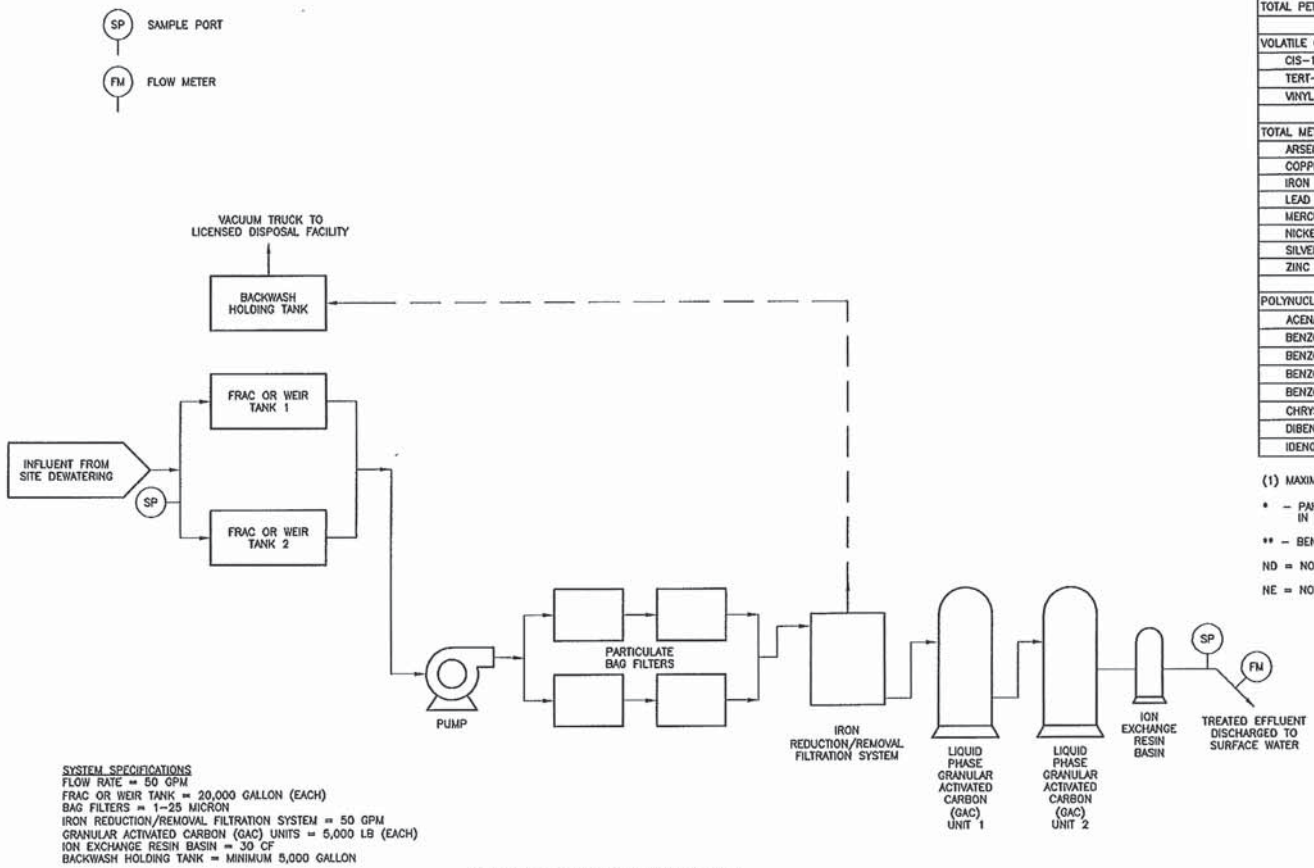

SYSTEM SPECIFICATIONS
FLOW RATE = 50 GPM
FRAC OR WEIR TANK = 20,000 GALLON (EACH)
BAG FILTERS = 1-25 MICRON
IRON REDUCTION/REMOVAL FILTRATION SYSTEM = 50 GPM
GRANULAR ACTIVATED CARBON (GAC) UNITS = 5,000 LB (EACH)
ION EXCHANGE RESIN BASIN = 30 CF
BACKWASH HOLDING TANK = MINIMUM 5,000 GALLON

PROCESS FLOW DIAGRAM
DEWATERING TREATMENT SYSTEM (TYPICAL)

CATEGORY G – CONTAMINATED CONSTRUCTION DEWATERING SITES	MAX INFLUENT (UG/L) (1)		DISCHARGE LIMIT (UG/L)
	CONTRACT 14	CONTRACT 15	
TOTAL PETROLEUM HYDROCARBONS (TPH)	1,600	6,800	1,000
VOLATILE ORGANIC COMPOUNDS (VOC)			
CIS-1,2-DICHLOROETHYLENE	58	ND	NE
TERT-BUTYLBENZENE (AS BENZENE)	ND	1.5	5**
VINYL CHLORIDE	4.7	ND	2
TOTAL METALS			
ARSENIC	15.7	6.4	55.2
COPPER	14	48	4.62
IRON	3,070	53,000	1,000
LEAD	18.4	430	176.8
MERCURY	1.83	0.46	1.69
NICKEL	7.8	12.6	59.79
SILVER	8.4	26.6	2
ZINC	43.4	137	76.11
POLYNUCLEAR AROMATIC HYDROCARBONS (PAH)			
ACENAPHTHENE	ND	3.125*	1.9
BENZO(a) ANTHRACENE	ND	3.125*	0.05
BENZO(a) PYRENE	ND	3.125*	2
BENZO(b) FLUORANTHENE	ND	3.125*	0.1
BENZO(k) FLUORANTHENE	ND	3.125*	2
CHRYSENE	ND	3.125*	5
DIBENZO(a) ANTHRACENE	ND	3.125*	0.1
IDENO(1.2.3.-cd) PYRENE	ND	3.125*	0.15

(1) MAXIMUM INFLUENT CONCENTRATIONS FROM MONITOR WELL SAMPLING CONDUCTED IN JANUARY 2012.

* – PAH CONCENTRATIONS ARE ESTIMATED AT ½ THE DETECTION LIMITS DUE TO MATRIX INTERFERENCE IN THE SAMPLE.

** – BENZENE LIMIT

ND = NOT DETECTED ABOVE ANALYTICAL DETECTION LIMITS

NE = NONE ESTABLISHED

REVISED 12/03/2012

DRAWING FILE: G:\JOBS\HIGHWAY\I-195\pionbdtreg.dwg PLOT DATE: Dec 03,2012-3:42PM

Maguire Group Inc. Architects/Engineers/Planners, 2050 Silas Deane Highway, Rocky Hill, Connecticut 06067	RHODE ISLAND DOT	REF:	PROJ. NO. 17724
	IMPROVEMENTS TO INTERSTATE 195 CONTRACTS 14 & 15	DRAWN BY: CAD	DWG. NO. FIG-4
	DEWATERING SYSTEM DIAGRAM	CHK'D BY: DRS	
		DATE: 11/01/12	SHEET 1 OF 1

INDEX
SPECIAL PROVISIONS
CONSTRUCTION SPECIFIC

CODE	TITLE	PAGE
T05.9901	Furnish and Install Narragansett Electric Light Duty Handhole	JS-250
T05.9902	Furnish and Install Cox Communications Handhole	JS-254
T05.9903	Furnish and Install Cox Communications Heavy Duty Handhole	
T08.9905	Furnish and Install National Grid Concrete Light Standard Foundation	JS-255
T08.9907	35' Temporary Wood Pole	JS-260
T11.99	Ornamental Traffic Signal Posts and Foundations	JS-261
T11.9999	Traffic Signal System – Dorrance and Clifford Streets	JS-264
T12.9910	Traffic Signal Controller Including Cabinet and Foundation, Providence	JS-265
	City of Providence Traffic Signal Technical Specifications	JS-266
T12.9916	MESH Network Vandal Resistant Antenna with Cable	JS-278
T12.9917	MESH Network Receiver	JS-280
T14.9999	Traffic Signal Equipment Painting	JS-281
T15.9901	Street Name Sign Ground Mount	JS-282
T15.9902	Street Name Sign Mast Arm Mount	
T15.9903	Street Name Sign Post	
Section 929	Field Office and Materials Laboratory	JS-284
T14.9901	1 Way 3 Section Mast Arm Mounted Optically Programmed Signal Head, 12 Inch	JS-287
T14.9902	L.E.D. Pedestrian Signal Countdown Timer and Module 12 Inch	JS-289
Section 12.107.99	Supplemental Indemnification Requirements	JS-291
Section T.06	Conduit	JS-292

S:\PROJECTS\I195FD\DESIGN\Contract 14\Specs\SpecPovIndex.rtf

ITEM CODE 203.9951
TREATMENT OF CONTAMINATED GROUNDWATER

DESCRIPTION

The work for this item includes furnishing, installing, operating, maintaining, and removing a system(s) for treating contaminated groundwater at each location where dewatering takes place in the designated Groundwater Areas of Environmental Concern (GWAOEC's). During the course of the project construction, dewatering within the designated GWAOEC's shall be as required by the special provisions. Groundwater has been documented to be contaminated with the following Contaminants of Concern (COCs), total petroleum hydrocarbons (TPH), volatile organic compounds (VOCs), polynuclear aromatic hydrocarbons (PAHs) and metals at concentrations exceeding the Rhode Island Pollutant Discharge Elimination System (RIPDES) Remediation General Permit (RGP), Discharge Category G – Contaminated Construction Dewatering Discharge Limits. Available analytical data for the groundwater is attached in appendix C of the CS pages. Any groundwater pumping required within the designated GWAOEC's within the project limits shall require temporary storage and treatment prior to discharge in accordance with the RIPDES RGP obtained for this project by the Rhode Island Department of Transportation (RIDOT). Work under this item shall also include the preparation and submittal of a revised Notice of Intent (NOI) form to the Rhode Island Department of Environmental Management (RIDEM) for Discharge Category G – Contaminated Construction Dewatering Sites should the Contractor propose to change any components of the permitted treatment system.

HEALTH AND SAFETY PLAN

The Contractor shall maintain a health and safety plan (HASP) in compliance with the Occupational Safety and Health Administration (OSHA) Standards defined in 29 CFR 1910.120.

The CONTRACTOR'S employees or Subcontractor's employees who will be potentially exposed to the contaminated groundwater shall be required to have OSHA 40-hour health and safety training and the 8 hour refresher training, if applicable. The CONTRACTOR shall provide training certificates to the ENGINEER for the employees that will be performing the work.

The level of dermal and respiratory protection shall be determined based upon periodic air monitoring to be performed by the CONTRACTOR and the requirements of the Site-specific HASP. The ENGINEER may conduct duplicate air monitoring for quality control purposes. Level D protection shall be the minimum personal protective level for all on-site personnel.

APPLICABLE LAWS AND REGULATIONS

The treatment and discharge of contaminated groundwater, including backwash wastewater, shall be conducted in accordance with the requirements and conditions of the Rhode Island Department of Environmental Management (RIDEM) Rhode Island Pollutant Discharge Elimination System

(RIPDES) Remediation General Permit (Permit), the Narragansett Bay Commission, and City of Providence regulations. The RIPDES RGP discharge limitations applicable to treated effluent for a Category G – Contaminated Dewatering Site Discharging to Class SA and SB receiving waters are attached for reference.

The Contractor shall install, operate and maintain the components of the GWTS(s) in accordance with the requirements of the RIPDES RGP issued for the project. The Contractor shall sample, test and monitor the discharge(s), including backwash wastewater, for the contaminants of concern (COCs) at the frequency requirements of the RIPDES RGP. The Contractor shall prepare and submit the monitoring results on a Discharge Monitoring Report (DMR) Form in accordance with the permit requirements. The Contractor shall submit copies of the analytical results and DMRs to all parties specified in the permit requirements and to the Engineer. The Contractor shall also prepare and submit the Notice of Termination (NOT) to RIDEM upon termination of the discharge(s) authorized under the general permit.

SUBMITTALS

The Contractor shall submit a written description of their proposed dewatering, storage and treatment systems to handle contaminated groundwater to the Engineer for approval. The description shall include a list of all equipment, including sizes and capacities, and the layout, piping, operation and monitoring schedule of the systems. Multiple systems may be required based on anticipated flow rates. The Contractor shall provide calculations for treatment capacities based on coordination with the Contractor supplied dewatering pumping systems, Contractor's anticipated flow rates, and RIPDES regulations and permit requirements. Contractor shall provide a shop drawing (sketch) of the complete, proposed dewatering, pumping, storage and treatment systems.

The Contractor shall prepare, submit and/or maintain copies of all federal, state, and local permits, including applicable fees, and monitoring status reports required to perform the contaminated groundwater treatment and discharge in accordance with the permit requirements. The final dewatering summary report, including analytical data and discharge monitoring reports, shall be prepared by the Contractor and submitted to the Engineer.

EQUIPMENT/MATERIALS

The Contractor shall install temporary dewatering well points or dewater open excavations where necessary within the GWAOECs. All pumped contaminated groundwater shall be pumped into fractionation tanks and filtered to remove particulate matter, shall be treated to remove iron, and passed through granular activated carbon canisters (GACs) in series and shall be pumped through an ion exchange resin to remove metals. The GWTS shall have the capacity to treat all of the pumped contaminated groundwater to meet the required RGP discharge limits at the dewatering discharge rate required for excavation operations. The treatment vessels shall be sized by qualified professionals to achieve the required removal of VOCs, PAHs, TPH and metals, while maintaining the required flow rate to achieve dewatering. As required by the RIDEM RIPDES RGP issued for

the project, the groundwater treatment system(s) must be capable of achieving Discharge Category G – Contaminated Construction Dewatering Discharge Limits.

The Contractor shall supply all required pumps and equipment to adequately dewater the work area within the GWAOECs. Pumps shall be adequately sized for the work specified. The Contractor shall supply its own power for pumping and other purposes.

Temporary groundwater storage facilities (dewatering basins or fractionation tanks) shall be compatible with contaminated water existing at the Site and shall be vandal and weather resistant. The system is required to be mobile. Temporary tanks shall be equipped with site glasses or other devices to allow for gauging of tank contents. Contractor shall be responsible for final cleaning of fractionation tank and disposal of "tank bottoms" generated from cleaning. The contractor is responsible for disposal/recycling of spent carbon, resins, filters, and other treatment media, including backwash wastewater.

Treatment equipment shall be sized to treat all of the pumped contaminated groundwater and equipped to achieve the dewatering requirements and remove the contaminants to the levels required by the RIPDES regulations and permits. The system(s) shall include settling vessel(s), if appropriate, filtration to remove particulate matter, iron removal/reduction pre-treatment (including backwash wastewater holding tank, if required based on the iron concentration in the effluent sample exceeding the applicable discharge standard), granular activated carbon canisters and ion exchange resin vessels capable of being connected in series and/or parallel and any fractionation tank will also be fitted with an automatic high water system shut-off. Unused regenerated or virgin granular activated carbon / ion exchange resins shall be supplied. All equipment shall be free of contamination from other sites and shall be decontaminated between different discharge locations within the project limits. The system(s) shall include readily accessible, standard sampling ports at the influent, mid-point, and effluent of the treatment system, and shall include a flow totalizing meter.

The systems shall include all pumps, hoses and appurtenances required to convey stored water to the treatment systems and treated water to the discharge point. The contractor shall provide a holding tank to collect backwash wastewater from the iron pre-treatment system, if required. The iron pre-treatment system shall be backwashed whenever the iron concentration in the effluent sample exceeds the applicable discharge standard.

CONSTRUCTION METHODS

Dewatering and discharge, which is not within a designated GWAOEC shall be in accordance with the special provisions for Construction Dewatering. Dewatering, treatment, discharge and monitoring of contaminated groundwater encountered within the designated GWAOECs within the project limits shall be in accordance with this specification and the RIDEM RIPDES RGP obtained for the project.

The Contractor shall supply all temporary storage tanks, hoses, sumps, pumps, valves and appurtenances required to meet this specification and the discharge limits of the RIPDES RGP. Contractor will operate and maintain the system and collect all necessary water samples as required by the RIPDES permit. In addition, upon treatment system start up the contractor shall collect influent and effluent samples at the frequency and location as specified in the RIPDES RDP. Moving the system will result in the need for system start up sampling at the frequency referenced in the permit requirements. Water samples shall be analyzed for contaminants including volatile organic compounds (VOC's) by EPA Method 8260, polynuclear aromatic hydrocarbons (PAHs) by EPA method 8270, total petroleum hydrocarbons (TPH) by EPA 8100 and total and

dissolved metals, including iron, with expedited turnaround time, and in accordance with the RIPDES permit requirements.

The Contractor shall replace treatment vessels and or treatment media whenever concentrations of contaminants exceed applicable discharge standards. The contractor shall backwash the iron removal system whenever the concentration of iron exceeds the applicable discharge standard. When change outs are necessary additional granular activated carbon and/or ion exchange resins will be supplied by the Contractor at no additional cost to RIDOT. In addition should on site regeneration occur, the contractor shall obtain approval from RIDEM, at no additional cost to RIDOT. Regeneration fluids and backwash wastewater from the iron pre-treatment system cannot be discharged and shall be disposed per RIDEM/EPA regulations at a licensed disposal facility. Contractor shall prepare and submit the status reports, as required, and a construction dewatering summary report to the Engineer at the project's completion, as required by RIPDES RGP.

METHOD OF MEASUREMENT

Item Code 203.9951, Treatment of Contaminated Groundwater will be measured for payment per Lump Sum bid price for all groundwater treatment system (GWTS) locations within the designated GWAOECs for the treatment and discharge of contaminated groundwater that is required for work in accordance with the Plans and Specifications and/or as directed by the ENGINEER.

BASIS OF PAYMENT

Item Code 203.9951, Treatment of Contaminated Groundwater will be paid for at the contract lump sum price for the entire contract. The price so-stated shall constitute full and complete compensation for all labor, materials, RIDEM RGP or other permits, Providence permits, all permit fees, and equipment required for pumping of contaminated groundwater, temporary storage of pumped contaminated groundwater, fractionation tanks, on-site treatment, calculations, sampling and analysis as required by the permits, recycling/disposal of used granular activated carbon / ion exchange resins and change-out of granular activated carbon / ion exchange resins and replacements as necessary throughout the project, backwashing, collection and disposal of backwash wastewater from the iron pre-treatment system (if required), cleaning of temporary storage tanks, preparation of summary report and discharge monitoring reports, and for all other incidentals required to finish the work, complete and accepted by the ENGINEER. Treatment of contaminated groundwater, in accordance with these specifications, generated from roadway construction/reconstruction, installation of storm water drainage systems, and utility installations shall be considered part of the costs for this item. No separate measurement or payment shall be made. The costs for multiple treatment systems, if needed to meet these requirements, shall be included in this lump sum item.

S:\PROJECTS\I195FD\DESIGN\Contract 14\Specs\Contaminated dewater\DF Contract 14_203 9951Contdewater2012_revised 12-04-12.docx

SECTION T06 - CONDUIT

Delete paragraph T06.03.1b of the Standard Specifications for Road and Bridge Construction (2010) in its entirety and replace it with the following;

b. Conduit Under Existing Pavement. Conduit under existing pavement shall refer to all conduit placed under existing paved areas where removal of the pavement is required only for the placement of conduit and the pavement is to be restored as part of this item. Conduit under existing pavement shall be placed in accordance with all applicable requirements of **Para. a** of this Subsection. The excavation shall be patched in accordance with the Plans regardless of the method of excavation. When conduit is placed in existing paved sidewalks, the sidewalk shall be replaced in accordance with **Subsection T.01.03.11** of these Specifications.

All other requirements of Section T.06 shall remain in effect.

S:\PROJECTS\I195FD\DESIGN\Contract 14\Specs\T06.03.1b Conduit under existing pavement.docx

Table of Contents - Distribution of Quantities

Project Name - I-195 Relocation - Contract 14(West side city streets)
Estimate Name - C14 Addendum No. 4
R.I. Contract No. - 2013-CH-004
FAP Nos: 405-421-633, 405-421-634, BRO-1954(075)

ItemCode	Description	Page
702.0750	MANHOLES, CATCH BASINS & INLETS DEPTHS GREATER THAN 12' STANDARD 3.7.0	153
702.9909	**PROVIDENCE STANDARD 32" LOCKING MANHOLE FRAME AND COVER**	**154**
702.9911	PROVIDENCE STANDARD GRANITE INLET STONE STANDARD P17	155
702.9912	PROVIDENCE STANDARD GRANITE APRON STONE STANDARD P18	156
702.9913	PROVIDENCE STANDARD CATCH BASIN FRAME AND COVER STANDARD P3 AND P4	159
702.9933	FURNISH AND INSTALL COX COMMUNICATIONS 2-WAY 3-INCH PVC COMMUNICATION CONDUITS	160
702.9940	DOUBLE GRATE CATCH BASIN GRATE STANDARD 3.3.4 - 5' SQUARE INSIDE	160
702.9941	DOUBLE GRATE CATCH BASIN STANDARD 3.3.5 - 4' SUMP	161
702.9942	CATCH BASIN TYPE 'D' ROUND STANDARD 3.4.0 - 4' SUMP	161
702.9943	CATCH BASIN W/ GUTTER INLET STANDARD 3.4.1 - 4' SUMP	161
702.9944	PRECAST 4'-0" ROUND CATCH BASIN R.I. STD 4.4.0 - 4' SUMP	161
702.9945	SOLID BLOCK SHALLOW DOUBLE GRATE CATCH BASIN STANDARD 3.5.4 - 4' SUMP	162
702.9952	8' MANHOLE PRECAST STANDARD 4.2.2M	163
702.9954	PRECAST 5'-0" ROUND CATCH BASIN R.I. STD 4.4.0 - 4' SUMP	163
702.9964	PRECAST 6'-0" ROUND CATCH BASIN R.I. STD 4.4.0 - 4' SUMP	164
702.9965	CATCH BASIN W/ GUTTER INLET STANDARD 3.4.1 - 6' DIAMETER	164
702.9966	PRECAST 8'0" ROUND CATCH BASIN R.I. STD 4.4.0M - 8' DIAMETER	164
702.9971	SPECIAL MANHOLE C-01	164
702.9972	SPECIAL MANHOLE R-01	164
702.9973	SPECIAL MANHOLE R-02	164
702.9974	SPECIAL MANHOLE S-01	165
702.9975	SPECIAL MANHOLE S-02	165
702.9983	MODIFY EXISTING NBC DIVERSION STRUCTURE	165
704.0100	RECONSTRUCT CATCH BASIN/CORBEL CONES	165
704.0200	**RECONSTRUCT MANHOLE/CORBEL CONES**	**166**
704.0300	RECONSTRUCT CATCH BASIN/VERTICAL WALLS	166
706.9000	PLUG AND CAP PIPE ALL SIZES	166
707.0900	ADJUST MANHOLES TO GRADE	168
707.0950	ADJUST TELEPHONE MANHOLE TO GRADE	171
707.0955	ADJUST ELECTRICAL MANHOLE TO GRADE	172
707.1000	**ADJUST SANITARY MANHOLE**	**177**
707.1100	ADJUST CATCH BASINS	180
707.1900	ADJUST FRAME & COVER TO GRADE	182
707.9901	ADJUST COMMUNICATIONS VAULT TO GRADE	182
707.9902	ADJUST NARRAGANSETT BAY COMMISSION MANHOLES AND COVERS	183
708.9040	CLEANING AND FLUSHING PIPE ALL SIZES	184
708.9041	CLEANING CATCH BASINS ALL TYPES AND SIZES	184
708.9042	CLEANING MANHOLES ALL TYPES AND SIZES	186
708.9941	CLEAN AND FLUSH EXISTING BRICK DRAIN	186
709.0100	CONCRETE CONNECTING COLLAR STANDARD 1.3.0	186
709.0300	CONCRETE HEADWALLS FOR MULTIPLE PIPE CULVERTS STANDARD 2.2.0	186
709.8103	FURNISH & INSTALL CEMENT CONCRETE CLASS B THRUST & ANCHOR BLOCKS CAST-IN-PLACE	187
710.9901	CONNECT PVC INTO EXISTING BRICK INTERCEPTOR	189
710.9902	CONNECT RCP INTO EXISTING 66" OVERFLOW	189
711.9901	CONCRETE SPLASH PAD	190
712.0100	WATER GATE BOX	190
712.0200	GAS GATE BOX	190
[illegible]	[illegible]	190

Table of Contents - Distribution of Quantities

Project Name - I-195 Relocation - Contract 14(West side city streets)
Estimate Name - Advertising Estimate November 2012
R.I. Contract No. - 2013-CH-004
FAP Nos: 405-421-633, 405-421-634, BRO-1954(075)

ItemCode	Description	Page
L15.9903	TRASH RECEPTACLE	273
L15.9904	BENCH	273
T04.5001	6 AWG SINGLE CONDUCTOR CABLE 600V INSULATION	274
T04.5303	14 AWG 3 CONDUCTOR CABLE	274
T04.5305	14 AWG 5 CONDUCTOR CABLE	275
T04.5307	14 AWG 7 CONDUCTOR CABLE	275
T04.9902	OPTICAL DETECTOR CABLE	275
T04.9905	VIDEO DETECTION SYSTEM CABLE	276
T04.9990	FURNISH ALARM CABLE AND APPURTENANCES	276
T05.0100	PRECAST TYPE A HANDHOLE STANDARD 18.2.0	277
T05.0400	BREAK INTO EXISTING HANDHOLE	278
T05.1030	ADJUST HANDHOLE TO GRADE	278
T05.9901	FURNISH AND INSTALL NARRAGANSETT ELECTRIC LIGHT DUTY HANDHOLE	280
T05.9902	FURNISH AND INSTALL COX COMMUNICATIONS HANDHOLE	282
T05.9903	FURNISH AND INSTALL COX COMMUNICATIONS HEAVY DUTY HANDHOLE	282
T05.9991	FURNISH TERMINAL POLE CAN	282
T06.1030	3 IN. RIGID STEEL CONDUIT-UNDERGROUND	283
T06.1040	4 IN. RIGID STEEL CONDUIT-UNDERGROUND	285
T06.3030	3 IN. RIGID STEEL CONDUIT-UNDER EXISTING PAVEMENT	286
T06.9901	****ITEM DELETED****	**286**
	.	
T06.9902	****ITEM DELETED****	**287**
T06.9903	****ITEM DELETED****	**287**
	.	
T08.9905	FURNISH AND INSTALL NATIONAL GRID CONCRETE LIGHT STANDARD FOUNDATION	288
T08.9907	35' TEMPORARY WOOD POLE	290
T08.9991	FURNISH AND INSTALL PEDESTAL FOUNDATION (FA)	290
T08.9992	FURNISH FIRE ALARM PEDESTAL (FA)	290
T11.9905	TRAFFIC SIGNAL STANDARD, 10 FOOT, ORNAMENTAL FLUTED STEEL PEDESTAL POLE AND FOUNDATION	290
T11.9915	DUAL MAST ARM (15'X25'), ORNAMENTAL MAST ARM TRAFFIC SIGNAL POST AND FOUNDATION, STD 19.5.1	291
T11.9920	20 FT, ORNAMENTAL MAST ARM TRAFFIC SIGNAL POST AND FOUNDATION, STD 19.5.1	291
T11.9925	25 FT, ORNAMENTAL MAST ARM TRAFFIC SIGNAL POST AND FOUNDATION, STD 19.5.1	292
T11.9930	30 FT, ORNAMENTAL MAST ARM TRAFFIC SIGNAL POST AND FOUNDATION, STD 19.5.1	292
T11.9945	45 FT., ORNAMENTAL MAST ARM TRAFFIC SIGNAL POST AND FOUNDATION STD. 19.5.1	292
T11.9961	DUAL MAST ARM (20'X25'), ORNAMENTAL MAST ARM TRAFFIC SIGNAL POST AND FOUNDATION, STD 19.5.1	292
T11.9963	DUAL MAST ARM (20'X30'), ORNAMENTAL MAST ARM TRAFFIC SIGNAL POST AND FOUNDATION, STD 19.5.1	293
T11.9999	TRAFFIC SIGNAL SYSTEM - DORRANCE AND CLIFFORD STREETS	293
T12.9910	TRAFFIC SIGNAL CONTROLLER INCLUDING CABINET AND FOUNDATION, PROVIDENCE	293
T12.9914	VIDEO DETECTION SYSTEM HARDWARE, PROVIDENCE	294
T12.9916	MESH NETWORK VANDAL RESISTANT ANTENNA WITH CABLE	294
T12.9917	MESH NETWORK RECEIVER	294
T13.1000	TRAFFIC DETECTORS-LOOP, STANDARD 19.6.0	295
T13.8200	PEDESTRIAN DETECTOR-PUSHBUTTON W/SIGN	295
T13.9902	OPTICAL DETECTOR - SINGLE CHANNEL, ONE WAY	296
T13.9903	OPTICAL PHASE SELECTOR AND CHASSIS	297

Table of Contents - Distribution of Quantities

Project Name - I-195 Relocation - Contract 14(West side city streets)
Estimate Name - Advertising Estimate November 2012
R.I. Contract No. - 2013-CH-004
FAP Nos: 405-421-633, 405-421-634, BRO-1954(075)

ItemCode	Description	Page
T13.9905	VIDEO DETECTION SYSTEM CAMERA, PROVIDENCE	297
T13.9906	OPTICAL DETECTOR CONFIRMATION BEACON	297
T14.3513	1 WAY 3 SECTION MAST ARM MOUNTED SIGNAL HEAD 12 INCH	298
T14.3911	1 WAY PEDESTAL MOUNTED L.E.D. PEDESTRIAN SIGNAL HEAD 12 INCH	299
T14.3912	2 WAY PEDESTAL MOUNTED L.E.D. PEDESTRIAN SIGNAL HEAD 12 INCH	299
T14.3913	1 WAY BRACKET MOUNTED L.E.D. PEDESTRIAN SIGNAL HEAD 12 INCH	300
T14.9901	1 WAY 3 SECTION MAST ARM MOUNTED OPTICALLY PROGRAMMED SIGNAL HEAD, 12 INCH	300
T14.9902	L.E.D. PEDESTRIAN SIGNAL COUNTDOWN TIMER AND MODULE 12 INCH	301
T15.0100	**DIRECTIONAL REGULATORY AND WARNING SIGNS**	**301**
T15.2000	**PARKING SIGNS**	**307**
T15.9901	STREET NAME SIGN GROUND MOUNT	311
T15.9902	STREET NAME SIGN MAST ARM MOUNT	313
T15.9903	STREET NAME SIGN POST	314
T20.0004	4 INCH WHITE FAST - DRYING WATERBORNE PAVEMENT MARKING PAINT	315
T20.0008	8 INCH WHITE FAST - DRYING WATERBORNE PAVEMENT MARKING PAINT	315
T20.0012	12 INCH WHITE FAST - DRYING WATERBORNE PAVEMENT MARKING PAINT	316
T20.0104	4 INCH YELLOW FAST - DRYING WATERBORNE PAVEMENT MARKING PAINT	316
T20.1000	REMOVE EXISTING PAVEMENT MARKINGS	316
T20.2006	6 INCH EPOXY RESIN PAVEMENT MARKINGS WHITE	317
T20.2008	8 INCH EPOXY RESIN PAVEMENT MARKINGS WHITE	321
T20.2012	12 INCH EPOXY RESIN PAVEMENT MARKINGS WHITE	322
T20.2014	4 INCH EPOXY RESIN PAVEMENT MARKINGS YELLOW	327
T20.2018	8 INCH EPOXY RESIN PAVEMENT MARKINGS YELLOW	329
T20.2020	EPOXY RESIN PAVEMENT ARROW - STRAIGHT, LEFT, RIGHT, OR COMBINED STANDARD 20.1.0	329
T20.2022	EPOXY RESIN PAVEMENT MARKING WORD "ONLY" STANDARD 20.1.0	330
T20.2116	6 INCH EPOXY RESIN PAVEMENT MARKINGS YELLOW	330
T20.9901	EPOXY RESIN PAVEMENT MARKING - YIELD LINE (20.3.0)	330
T20.9902	EPOXY RESIN SHARED LANE MARKING (SLM)	331
T20.9903	EPOXY RESIN BIKE SYMBOL WITH ARROW (BSA)	333
T20.9904	EPOXY RESIN BICYCLE DETECTION MARKING (BDM)	334
702.9950	**BRICK/SOLID BLOCK 4'-0" ROUND MANHOLE - STD3.2.0 MODIFIED**	**334**
702.9951	**PRECAST 4'-0" ROUND MANHOLE - STD 4.2.0 MODIFIED.**	**334**
T06.5130	3 INCH SCHEDULE 40 POLYVINYL CHLORIDE PLASTIC CONDUIT - UNDERGROUND	336
T06.5230	3 INCH SCHEDULE 80 POLYVINYL CHLORIDE PLASTIC CONDUIT - UNDERGROUND	336
T06.5430	3 INCH SCHEDULE 80 POLYVINYL CHLORIDE PLASTIC CONDUIT - UNDER EXISTING PAVEMENT	337

Distribution of Quantities

Project Name - I-195 Relocation - Contract 14(West side city streets)
Estimate Name - Advertising Estimate November 2012
R.I. Contract No. - 2013-CH-004
FAP Nos: 405-421-633, 405-421-634, BRO-1954(075)

Item No.	Item Code	Description	UM	Qty.	Pay Code	Seq. No.
128	701.9992 Cont.	CHESTNUT STREET				
		505+95		1.00	0001	01
		Item 701.9992 Total:		1.00		
129	701.9993	SOUTH OUTFALL CONNECTION AT POINT STREET	LS			
		POINT STREET				
		CB P57 - 42" RCP		1.00	0001	01
		Item 701.9993 Total:		1.00		
130	701.9994	NORTH OUTFALL CONNECTION AT POINT STREET	LS			
		POINT STREET				
		CB P68 - OUTFALL PIPE		1.00	0001	01
		Item 701.9994 Total:		1.00		
131	702.0207	4' MANHOLE BRICK STANDARD 3.2.0	EACH			
		DYER STREET				
		161+75, RT (MH 4D07A)		1.00	0001	01
		Item 702.0207 Total:		1.00		
132	702.0510	HEAVY-DUTY SQUARE FRAME AND ROUND COVER STANDARD 6.1.1	EACH			
		DYER STREET				
		159+21, LT (CB 4D22A)		1.00	0001	01
		POINT STREET				
		36+65, RT (CB P51)		1.00	0001	01
		Item 702.0510 Total:		2.00		
133	702.0512	FRAME AND GRATE STANDARD 6.3.0	EACH			
		SHIP STREET				

Distribution of Quantities

Project Name - I-195 Relocation - Contract 14(West side city streets)
Estimate Name - Advertising Estimate November 2012
R.I. Contract No. - 2013-CH-004
FAP Nos: 405-421-633, 405-421-634, BRO-1954(075)

Item No.	Item Code	Description	UM	Qty.	Pay Code	Seq. No.
139	702.0610 Cont.	39+45, LT (CB P66)		1.00	0001	01
		40+25, LT (CB P67)		1.00	0001	01
		40+49, RT (CB P57)		1.00	0001	01
		Item 702.0610 Total:		**6.00**		
140	702.0625	**PRECAST CATCH BASIN 6' SQUARE**	**EACH**			
		STANDARD 4.3.0				
		POINT STREET				
		40+85, LT (CB P68)		1.00	0001	01
		41+35, LT (MH P69)		1.00	0001	01
		Item 702.0625 Total:		**2.00**		
141	702.0630	**PRECAST MANHOLE 4' DIAMETER**	**EACH**			
		STANDARD 4.2.0				
		DYER STREET				
		155+20, LT (MH 4D29)		1.00	0001	01
		158+75, RT (MH 4D15)		1.00	0001	01

Distribution of Quantities

Project Name - I-195 Relocation - Contract 14(West side city streets)
Estimate Name - Advertising Estimate November 2012
R.I. Contract No. - 2013-CH-004
FAP Nos: 405-421-633, 405-421-634, BRO-1954(075)

Item No.	Item Code	Description	UM	Qty.	Pay Code	Seq. No.
141	702.0630 Cont.					
		PECK STREET				
		310+29, RT (MH 4P05)		1.00	0001	01
		310+47, RT (MH 4P13)		1.00	0001	01
		RICHMOND STREET				
		702+45, LT (MH BU-1)		1.00	0001	01
		SHIP STREET				
		808+84, LT (MH 4S08)		1.00	0001	01
		Item 702.0630 Total:		**6.00**		
142	702.0635	**PRECAST MANHOLE 5' DIAMETER**	**EACH**			
		STANDARD 4.2.1				
		CLIFFORD STREET				
		45+85, LT (MH 4C06)		1.00	0001	01
		FRIENDSHIP STREET				
		86+20, RT (MH 4F10)		1.00	0001	01
		RICHMOND STREET				
		703+10, LT (MH 4R05)		1.00	0001	01
		703+65, LT (MH 4R21)		1.00	0001	01
		704+15, LT (MH 4R20)		1.00	0001	01

Distribution of Quantities

Project Name - I-195 Relocation - Contract 14(West side city streets)
Estimate Name - Advertising Estimate November 2012
R.I. Contract No. - 2013-CH-004
FAP Nos: 405-421-633, 405-421-634, BRO-1954(075)

Item No.	Item Code	Description	UM	Qty.	Pay Code	Seq. No.
155	702.0750 Cont.	FRIENDSHIP STREET				
		83+25 SMH F-03		0.50	PDPW	05
		86+20 SMH F-05		0.50	PDPW	05
		87+00, RT (CB 4F31)		1.50	PDPW	05
		87+50 SMH F-06		0.50	PDPW	05
		I-195 CONTRACT 14				
		ROUND OFF / AS DIRECTED		5.30	0001	01
		Item 702.0750 Total:		**20.00**		
156	702.9909	PROVIDENCE STANDARD 32" LOCKING MANHOLE FRAME AND COVER	EACH			
		CHESTNUT STREET				
		507+34, RT (EXISTING MH 4F36A)		1.00	0001	01
		CLAVERICK STREET				
		403+14, 5.6 LT (SMH CK-01)		1.00	PDPW	05
		404+60, 5.6 LT (SMH CK-02)		1.00	PDPW	05
		CLIFFORD STREET				
		40+50, BL (SMH CL-01)		1.00	PDPW	05
		41+25, BL (SMH CL-02)		1.00	PDPW	05
		42+75, BL (SMH CL-03)		1.00	PDPW	05
		44+06, BL (SMH CL-04)		1.00	PDPW	05
		45+26, BL (SMH CL-05)		1.00	0043	03
		51+90, BL (SMH CL-13)		1.00	0043	03
		53+35, BL (SMH CL-14)		1.00	0043	03
		54+65, BL (SMH CL-15)		1.00	0043	03
		DYER STREET				
		159+08, RT (SMH D-02)		1.00	0043	03
		160+75, RT (SMH D-04)		1.00	0043	03
		161+06, RT (SMH D-03)		1.00	0043	03
		FRIENDSHIP STREET				
		80+50, BL (SMH F-01)		1.00	PDPW	05
		81+75, BL (SMH F-02)		1.00	PDPW	05

Distribution of Quantities

Project Name - I-195 Relocation - Contract 14(West side city streets)
Estimate Name - Advertising Estimate November 2012
R.I. Contract No. - 2013-CH-004
FAP Nos: 405-421-633, 405-421-634, BRO-1954(075)

Item No.	Item Code	Description	UM	Qty.	Pay Code	Seq. No.
178	704.0100 Cont.	RICHMOND STREET				
		707+07, LT (CB 4F47)		1.00	0001	01
		SHIP STREET				
		808+37, LT (CB S04)		1.00	0001	01
		808+40, RT (DI S05)		1.00	0001	01
		808+54, RT (CB S07)		1.00	0001	01
		Item 704.0100 Total:		**14.00**		
179	704.0200	RECONSTRUCT MANHOLE/CORBEL CONES	EACH			
		CHESTNUT STREET				
		507+34 RT (EXIST SMH 4F36A)		1.00	0001	01
		CLIFFORD STREET				
		44+06, BL (SMH CL-04)		1.00	0001	01
		45+26, BL (SMH CL-05)		1.00	0001	01
		51+90, BL (SMH CL-13)		1.00	0043	03
		DYER STREET				
		161+10, LT (MH 4S03)		1.00	0001	01
		FRIENDSHIP STREET				
		90+43, 0.5' RT		1.00	0001	01
		91+39 RT (EXIST SMH 4F36B)		1.00	0001	01
		I-195 CONTRACT 14				
		AS DIRECTED		5.00	0001	01
		SHIP STREET				
		808+43, LT (EXISTING MH - PAVED OVER)		1.00	0001	01
		Item 704.0200 Total:		**13.00**		
180	704.0300	RECONSTRUCT CATCH BASIN/VERTICAL WALLS	VLF			
		CLIFFORD STREET				
		49+98, 13.7' LT (CB 4C24A)		3.00	0001	01
		EDDY STREET				
		171+20, RT (EXISTING CB)		5.00	0001	01
		Item 704.0300 Total:		**8.00**		
181	706.9000	PLUG AND CAP PIPE ALL SIZES	EACH			

Distribution of Quantities

Project Name - I-195 Relocation - Contract 14(West side city streets)
Estimate Name - Advertising Estimate November 2012
R.I. Contract No. - 2013-CH-004
FAP Nos: 405-421-633, 405-421-634, BRO-1954(075)

Item No.	Item Code	Description	UM	Qty.	Pay Code	Seq. No.
S184	707.0955 Cont.	700+47, 8' LT		1.00	0043	03
		700+67, 2' RT		1.00	0043	03
		701+78, 2' RT		1.00	0043	03
		702+77, 14' RT		1.00	0043	03
		SHIP STREET				
		808+62, 26' RT		1.00	0043	03
		Item 707.0955 Total:		226.00		
185	707.1000	ADJUST SANITARY MANHOLE	EACH			
		BASSETT STREET				
		62+59, 0.5' LT		1.00	0001	01
		CHESTNUT STREET				
		505+48, 7' LT		1.00	0001	01
		506+69, 7' LT		1.00	0001	01
		507+99, 7' LT		1.00	0001	01
		509+31, 7' LT		1.00	0001	01
		CLIFFORD STREET				
		42+92, 1' RT		1.00	0001	01
		46+37, 0.5' LT		1.00	0001	01
		47+21, 0.5' LT		1.00	0001	01
		48+12, 0.5' LT		1.00	0001	01
		49+00, 1' RT		1.00	0001	01
		51+58, BL		1.00	0001	01
		55+28, BL		1.00	0001	01
		56+24, 0.5' RT		1.00	0001	01
		57+43, BL		1.00	0001	01
		58+25, 0.5' RT		1.00	0001	01
		59+26, 0.5' LT		1.00	0001	01
		60+18, 0.5' LT		1.00	0001	01
		60+85, 0.5' LT		1.00	0001	01
		61+22, 0.5' LT		1.00	0001	01
		62+39, 0.5' LT		1.00	0001	01

Distribution of Quantities

Project Name - I-195 Relocation - Contract 14(West side city streets)
Estimate Name - Advertising Estimate November 2012
R.I. Contract No. - 2013-CH-004
FAP Nos: 405-421-633, 405-421-634, BRO-1954(075)

Item No.	Item Code	Description	UM	Qty.	Pay Code	Seq. No.
185	707.1000 Cont.	172+07, 12' RT		1.00	0001	01
		172+32, 3' RT		1.00	0001	01
		173+97, 13' RT		1.00	0001	01
		175+33, 4' RT		1.00	0001	01
		175+75, 24' LT		1.00	0001	01
		175+84, 12' RT		1.00	0001	01
		176+23, 32' RT		1.00	0001	01
		176+84, 5' RT		1.00	0001	01
		177+84, 13' RT		1.00	0001	01
		860+22, 5' LT		1.00	0001	01
		860+98, 3' LT		1.00	0001	01
		FRIENDSHIP STREET				
		92+35, 0.5' RT		1.00	0001	01
		93+38, 0.5' RT		1.00	0001	01
		94+29, 0.5' RT		1.00	0001	01
		94+97, 17' LT		1.00	0001	01
		95+24, 0.5' RT		1.00	0001	01
		I-195 CONTRACT 14				
		ADDITIONAL ADJUSTMENT FOR NEW MH'S		17.00	0001	01
		INCREASE QTY FOR PHASED CONSTRUCTION (X 0.50)		60.00	0001	01
		PECK STREET				
		309+10, 20' LT (NBC)		1.00	0001	01
		309+20, 20' LT (NBC)		1.00	0001	01
		PINE STREET				
		59+52, BL		1.00	0001	01
		POINT STREET				
		26+86, BL		1.00	0001	01
		27+83, BL		1.00	0001	01
		28+68, BL		1.00	0001	01
		29+85, BL		1.00	0001	01

Distribution of Quantities

Project Name - I-195 Relocation - Contract 14(West side city streets)
Estimate Name - Advertising Estimate November 2012
R.I. Contract No. - 2013-CH-004
FAP Nos: 405-421-633, 405-421-634, BRO-1954(075)

Item No.	Item Code	Description	UM	Qty.	Pay Code	Seq. No.
185	707.1000 Cont.	30+89, 9' RT		1.00	0001	01
		31+04, BL		1.00	0001	01
		32+31, BL		1.00	0001	01
		33+02, 4' RT		1.00	0001	01
		33+04, 3' LT		1.00	0001	01
		33+30, BL		1.00	0001	01
		34+47, BL		1.00	0001	01
		36+72, 17' LT		1.00	0001	01
		36+81, 44' RT		1.00	0001	01
		37+35, 9' RT		1.00	0001	01
		37+91, 17' LT		1.00	0001	01
		38+21, 43' RT		1.00	0001	01
		40+49, 5' RT		1.00	0001	01
		40+50, 4' LT		1.00	0001	01
		40+54, BL		1.00	0001	01
		40+62, 4' LT		1.00	0001	01
		40+86, 12' LT		1.00	0001	01
		RICHMOND STREET				
		700+79, 2.5' RT		1.00	0001	01
		703+12, 2' RT		1.00	0001	01
		704+14, 2' RT		1.00	0001	01
		704+82, 2' RT		1.00	0001	01
		706+70, 3' RT		1.00	0001	01
		SHIP STREET				
		800+60, 0.5' RT		1.00	0001	01
		808+25, BL		1.00	0001	01
		808+70, 13' RT		1.00	0001	01
		809+10, 1' LT		1.00	0001	01
		UTILITY CORRIDOR				
		27+00, 20' RT		1.00	0001	01
		Item 707.1000 Total:		**178.00**		
186	707.1100	**ADJUST CATCH BASINS**	**EACH**			

Distribution of Quantities

Project Name - I-195 Relocation - Contract 14(West side city streets)
Estimate Name - Advertising Estimate November 2012
R.I. Contract No. - 2013-CH-004
FAP Nos: 405-421-633, 405-421-634, BRO-1954(075)

Item No.	Item Code	Description	UM	Qty.	Pay Code	Seq. No.
316	T06.1040 Cont.	CTRL TO 90+36 LT		3.00	0001	01
		EMH TO HH		22.00	0001	01
		PINE/CHESTNUT SIGNAL				
		EMH TO HH		40.00	0001	01
		HH TO CONTROLLER		5.00	0001	01
		Item T06.1040 Total:		**296.00**		
317	T06.3030	**3 IN. RIGID STEEL CONDUIT-UNDER EXISTING PAVEMENT**	**LF**			
		PINE STREET				
		59+50, LT (FIRE ALARM)		50.00	0043	03
		Item T06.3030 Total:		**50.00**		
318	T06.9901	**3 INCH POLYVINYL CHLORIDE PLASTIC CONDUIT, SCHEDULE 80, UNDER PAVEMENT**	**LF**			
		CLIFFORD/CHESTNUT SIGNAL				
		49+95 RT - 50+03 LT		32.00	0001	01
		50+03 LT - 50+50 LT		51.00	0001	01
		50+50 LT - 50+60 RT		50.00	0001	01
		CLIFFORD/RICHMOND SIGNAL				
		54+75 LT - 55+28 LT		57.00	0001	01
		54+80 RT - 55+22 RT		45.00	0001	01
		55+28 LT - 55+22 RT		47.00	0001	01
		DYER/DORRANCE SIGNAL				
		153+85 RT - 154+18, LT		70.00	0001	01
		153+85 RT - 154+60, RT		80.00	0001	01
		154+60 LT - 154+30, LT		70.00	0001	01
		FRIENDSHIP/CHESTNUT SIGNAL				
		89+65 LT - 89+71 RT		38.00	0001	01
		89+71 RT - 90+28 RT		65.00	0001	01
		90+36 LT - 90+42 RT		41.00	0001	01
		Item T06.9901 Total:		**646.00**		

Distribution of Quantities

Project Name - I-195 Relocation - Contract 14(West side city streets)
Estimate Name - Advertising Estimate November 2012
R.I. Contract No. - 2013-CH-004
FAP Nos: 405-421-633, 405-421-634, BRO-1954(075)

Item No.	Item Code	Description	UM	Qty.	Pay Code	Seq. No.
319	T06.9902	3 INCH POLYVINYL CHLORIDE PLASTIC CONDUIT-UNDERGROUND	LF			
		CLIFFORD/CHESTNUT SIGNAL				
		49+45 - 49+95 RT		50.00	0001	01
		CLIFFORD/DORRANCE SIGNAL				
		63+05 - 63+20 RT		20.00	0001	01
		63+05 - CONTROLLER		22.00	0001	01
		63+10, RT		70.00	0001	01
		63+25 - CONTROLLER		10.00	0001	01
		CLIFFORD/RICHMOND SIGNAL				
		CTRL TO 55+22 RT		15.00	0001	01
		DYER/DORRANCE SIGNAL				
		153+35 - 153+75 RT		65.00	0001	01
		153+40 - 153+85 RT		45.00	0001	01
		153+75 RT - CONTROLLER		32.00	0001	01
		154+20 - 154+60 LT		45.00	0001	01
		154+80 - 155+00, LT		25.00	0001	01
		FRIENDSHIP/CHESTNUT SIGNAL				
		90+28 RT - 90+35 RT		8.00	0001	01
		CTRL TO 90+36 LT		7.00	0001	01
		PINE/CHESTNUT SIGNAL				
		59+50 - 59+65, RT		15.00	0001	01
		60+15 - 60+30 RT		20.00	0001	01
		60+30 - 60+40 RT		8.00	0001	01
		Item T06.9902 Total:		457.00		
320	T06.9903	3 INCH POLYVINYL CHLORIDE PLASTIC CONDUIT, SCHEDULE 80, UNDER EXISTING PAVEMENT	LF			
		CLIFFORD/DORRANCE SIGNAL				
		62+40 - 62+50, RT		35.00	0001	01
		62+40 - 63+15, RT		75.00	0001	01

Distribution of Quantities

Project Name - I-195 Relocation - Contract 14(West side city streets)
Estimate Name - Advertising Estimate November 2012
R.I. Contract No. - 2013-CH-004
FAP Nos: 405-421-633, 405-421-634, BRO-1954(075)

Item No.	Item Code	Description	UM	Qty.	Pay Code	Seq. No.
320	T06.9903 Cont.	62+45 - 63+10, LT		65.00	0001	01
		PINE/CHESTNUT SIGNAL				
		59+50, RT - 59+50, LT		40.00	0001	01
		59+60 - 60+15, RT		55.00	0001	01
		60+20, LT - 60+30, RT		40.00	0001	01
		Item T06.9903 Total:		310.00		
321	T08.9905	**FURNISH AND INSTALL NATIONAL GRID CONCRETE LIGHT STANDARD FOUNDATION**	**EACH**			
		CHESTNUT STREET (NGLTG)				
		505+40, 21.5' RT (NGLTG)		1.00	0001	01
		506+50, 21.5' RT (NGLTG)		1.00	0001	01
		507+38, 21.5' RT (NGLTG)		1.00	0001	01
		508+23, 21.5' RT (NGLTG)		1.00	0001	01
		509+13, 21.5' RT (NGLTG)		1.00	0001	01
		CLAVERICK STREET (NGLTG)				
		403+20, 22.5' LT (NGLTG)		1.00	0001	01
		404+30, 22.5' LT (NGLTG)		1.00	0001	01
		CLIFFORD STREET (NGLTG)				
		41+35, 22.5' LT (NGLTG)		1.00	0001	01
		42+45, 22.5' LT (NGLTG)		1.00	0001	01
		43+55, 22.5' LT (NGLTG)		1.00	0001	01
		44+65, 22.5' LT (NGLTG)		1.00	0001	01
		45+75, 22.5' LT (NGLTG)		1.00	0001	01
		46+50, 13.5' RT (NGLTG)		1.00	0001	01
		49+85, 13.0' RT (NGLTG)		1.00	0001	01
		51+65, 22.5' LT (NGLTG)		1.00	0001	01
		52+65, 22.5' LT (NGLTG)		1.00	0001	01
		53+65, 22.5' LT (NGLTG)		1.00	0001	01
		54+65, 22.5' LT (NGLTG)		1.00	0001	01
		DORRANCE STREET (NGLTG)				
		255+10, 24.5' LT (NGLTG)		1.00	0001	01

Distribution of Quantities

Project Name - I-195 Relocation - Contract 14(West side city streets)
Estimate Name - Advertising Estimate November 2012
R.I. Contract No. - 2013-CH-004
FAP Nos: 405-421-633, 405-421-634, BRO-1954(075)

Item No.	Item Code	Description	UM	Qty.	Pay Code	Seq. No.
350	T15.0100 Cont.	2-39, R3-5, 30"X36"		5.00	0001	01
		5-33, R4-11, 30"X30"		6.25	0001	01
		5-34, R4-11, 30"X30"		6.25	0001	01
		5-35 R4-11, 30"X30"		6.25	0001	01
		CLAVERICK STREET				
		2-26, R6-1R, 36"X12"		3.00	0001	01
		2-7, R1-1, 30"X30"		6.25	0001	01
		5-12, R1-1, 30"X30"		6.25	0001	01
		5-4, R1-1, 30"X30"		6.25	0001	01
		CLIFFORD STREET				
		4-10, M3-1, 24"X12"		2.00	0001	01
		4-11, M6-1, 21"X15"		2.20	0001	01
		4-14, R4-11, 30"X30"		6.25	0001	01
		4-3, R3-2, 24"X24"		4.00	0001	01
		4-4, M4-5, 24"X12"		2.00	0001	01
		4-5, M1-1, 24"X24"		4.00	0001	01
		4-6, M3-3, 24"X12"		2.00	0001	01
		4-7, M6-3, 21"X15"		2.20	0001	01
		4-8, M4-5, 24"X12"		2.00	0001	01
		4-9, M1-1, 24"X24"		4.00	0001	01
		5-10, R6-1R, 36"X12"		3.00	0001	01
		5-11, R6-1L, 36"X12"		6.25	0001	01
		5-17, R6-1R, 36"X12"		3.00	0001	01
		5-2, R6-1L, 36"X12"		3.00	0001	01
		5-20, R6-1R, 36"X12"		3.00	0001	01
		5-22, R6-1L, 36"X12"		3.00	0001	01
		5-23, R5-1, 30"X30"		6.25	0001	01
		5-3, R6-1R, 36"X12"		3.00	0001	01
		5-32, R4-11, 30"X30"		6.25	0001	01
		5-6, R5-1, 30"X30"		6.25	0001	01
		5-8, R5-1, 30"X30"		6.25	0001	01
		5-9, R1-5, 30"X30"		6.25	0001	01
		6-10, R6-1R, 36"X12"		3.00	0001	01
		6-11, R5-1, 30"X30"		6.25	0001	01

Distribution of Quantities

Project Name - I-195 Relocation - Contract 14(West side city streets)
Estimate Name - Advertising Estimate November 2012
R.I. Contract No. - 2013-CH-004
FAP Nos: 405-421-633, 405-421-634, BRO-1954(075)

Item No.	Item Code	Description	UM	Qty.	Pay Code	Seq. No.
350	T15.0100 Cont.	6-13, R6-1R, 36"X12"		3.00	0001	01
		6-14, R3-2, 24"X24"		4.00	0001	01
		6-16, R4-11, 30"X30"		6.25	0001	01
		6-2, R6-1L, 36'X12"		3.00	0001	01
		6-21, M4-5, 24"X12"		2.00	0001	01
		6-22, M1-1, 24"X24"		4.00	0001	01
		6-3, R6-1R, 36'X12"		3.00	0001	01
		7-3, R6-1R, 36"X12"		3.00	0001	01
		7-4, R3-1, 24"X24"		4.00	0001	01
		7-5, R6-1L, 36"X12"		3.00	0001	01
		7-6, R3-1, 24"X24"		4.00	0001	01
		8-15, R6-1L 36"X12"		3.00	0001	01
		8-16, R6-1R, 36"X12"		3.00	0001	01
		8-17, R6-1L, 36"X12"		3.00	0001	01
		8-21, R6-1R, 36"X12"		3.00	0001	01
		8-23, M4-5, 24"X12"		2.00	0001	01
		8-24, M1-1, 24"X24"		4.00	0001	01
		8-25, M6-3, 21"X15"		2.20	0001	01
		8-26, R5-1, 30"X30"		6.25	0001	01
		8-34, R3-1, 24"X24"		4.00	0001	01
		8-35, R1-1, 30"X30"		6.25	0001	01
		8-37, R6-1L, 36"X12"		3.00	0001	01
		8-38, R5-1, 30"X30"		6.25	0001	01
		8-39, R6-1R, 36"X12"		3.00	0001	01
		8-52, R4-11, 30"X30"		6.25	0001	01
		8-53, R4-11, 30"X30"		6.25	0001	01
		CLIFFORD/CHESTNUT SIGNAL				
		R3-1, 24"X24"		4.00	0001	01
		R3-2, 24"X24"		4.00	0001	01
		CLIFFORD/DORRANCE SIGNAL				
		R3-1, 24"X24"		4.00	0001	01
		R3-2, 24"X24"		4.00	0001	01
		CLIFFORD/RICHMOND SIGNAL				

Distribution of Quantities

Project Name - I-195 Relocation - Contract 14(West side city streets)
Estimate Name - Advertising Estimate November 2012
R.I. Contract No. - 2013-CH-004
FAP Nos: 405-421-633, 405-421-634, BRO-1954(075)

Item No.	Item Code	Description	UM	Qty.	Pay Code	Seq. No.
350	T15.0100 Cont.	R3-1, 24"X24"		4.00	0001	01
		R3-2, 24"X24"		4.00	0001	01
		R3-5, 30"X36"		7.50	0001	01
		POINT STREET				
		14-1, R1-1, 30"X30"		6.25	0001	01
		14-12, W14-1, 30"X30"		6.25	0001	01
		14-14, R1-1, 30"X30"		6.25	0001	01
		14-15, M4-5, 24"X12"		2.00	0001	01
		14-16, M1-1, 24"X24"		4.00	0001	01
		14-17, M6-1L, 21"X15"		2.19	0001	01
		14-3, R1-1, 30"X30"		6.25	0001	01
		14-5, R1-1, 30"X30"		6.25	0001	01
		15-10, W11-2, 30"X30"		6.25	0001	01
		15-11, W16-7P, 24"X12"		2.00	0001	01
		15-12, W11-2, 30"X30"		6.25	0001	01
		15-13, W16-7P, 24"X12"		2.00	0001	01
		15-14, R4-7, 24"X30"		5.00	0001	01
		15-17, R4-7, 24"X30"		5.00	0001	01
		15-20, R4-11, 30"X30"		6.25	0001	01
		15-21, R4-11, 30"X30"		6.25	0001	01
		15-22, R4-11, 30"X30"		6.25	0001	01
		15-23, R4-11, 30"X30"		6.25	0001	01
		15-24, R3-7L, 30"X30"		6.25	0001	01
		15-6, R4-7, 24"X30"		5.00	0001	01
		16-3, R4-11, 30"X30"		6.25	0001	01
		16-4, R4-11, 30"X30"		6.25	0001	01
		16-5, R4-7, 24"X30"		5.00	0001	01
		16-6, OM3-L, 12"X24"		2.00	0001	01
		RICHMOND STREET				
		11-1, R1-1, 30"X30"		6.25	0001	01
		11-10, R4-11, 30"X30"		6.25	0001	01
		3-14, R4-11, 30"X30"		6.25	0001	01
		6-17, R4-11, 30"X30"		6.25	0001	01
		6-18, R4-11, 30"X30"		6.25	0001	01

Distribution of Quantities

Project Name - I-195 Relocation - Contract 14(West side city streets)
Estimate Name - Advertising Estimate November 2012
R.I. Contract No. - 2013-CH-004
FAP Nos: 405-421-633, 405-421-634, BRO-1954(075)

Item No.	Item Code	Description	UM	Qty.	Pay Code	Seq. No.
350	T15.0100 Cont.	SHIP STREET				
		11-1, R1-1, 30"X30"		6.25	0001	01
		13-3, R1-1, 30"X30"		6.25	0001	01
		5-24, R1-1, 30"X30"		6.25	0001	01
		5-25, R6-1R, 36"X12"		3.00	0001	01
		5-28, R6-1L, 36"X12"		3.00	0001	01
		5-29, R1-1, 30"X30"		6.25	0001	01
		6-23, R6-1L, 36"X12"		3.00	0001	01
		6-24, R5-1, 30"X30"		6.25	0001	01
		Item T15.0100 Total:		**1,116.75**		
351	T15.2000	**PARKING SIGNS**	**SF**			
		BASSETT STREET				
		10-3, R7-1R, 12"X18"		1.50	0001	01
		10-4, R7-1L, 12"X18"		1.50	0001	01
		10-5, R7-1R, 12"X18"		1.50	0001	01
		10-6, R7-1L, 12"X18"		1.50	0001	01
		CHESTNUT STREET				
		2-12, R7-1 SP, 12"X18"		1.50	0001	01
		2-13, R7-1 SP, 12"X18"		1.50	0001	01
		2-17),R7-1 SP, 12"X18"		1.50	0001	01
		2-18, R7-1 SP, 12"X18"		1.50	0001	01
		2-24, R7-1 SP, 12"X18"		1.50	0001	01
		5-15, R7-1 SP, 12"X18"		1.50	0001	01
		5-16, R7-1 SP, 12"X18"		1.50	0001	01
		5-21, R7-1 SP, 12"X18"		1.50	0001	01
		CLAVERICK STREET				
		2-4, R7-1 SP, 12"X18"		1.50	0001	01
		2-8, R7-1, 12"X18"		1.50	0001	01
		5-5, R7-1 SP, 12"X18"		1.50	0001	01
		5-7, R7-1 , 12"X18"		1.50	0001	01
		CLIFFORD STREET				
		4-1, R7-1 SP, 12"X18"		1.50	0001	01

Distribution of Quantities

Project Name - I-195 Relocation - Contract 14(West side city streets)
Estimate Name - Advertising Estimate November 2012
R.I. Contract No. - 2013-CH-004
FAP Nos: 405-421-633, 405-421-634, BRO-1954(075)

Item No.	Item Code	Description	UM	Qty.	Pay Code	Seq. No.
351	T15.2000 Cont.	4-12, R7-1, 12"X18"		1.50	0001	01
		4-13, R7-1 SP, 12"X18"		1.50	0001	01
		4-2, R7-1, 12"X18'		1.50	0001	01
		5-1, R7-1, 12"X18"		1.50	0001	01
		5-13, R7-1, 12"X18"		1.50	0001	01
		5-14, R7-1, 12"X18"		1.50	0001	01
		5-18, R7-1, 12"X18"		1.50	0001	01
		5-19, R7-1, 12"X18"		1.50	0001	01
		5-26, R7-1 SP, 12"X18"		1.50	0001	01
		5-27, R7-1, 12"X18"		1.50	0001	01
		6-1, R7-1 SP, 12"X18"		1.50	0001	01
		6-5, R7-1, 12"X18"		1.50	0001	01
		6-8, R7-1, 12"X18"		1.50	0001	01
		6-9, R7-1, 12"X18"		1.50	0001	01
		7-1, R7-1, 12"X18"		1.50	0001	01
		7-2, R7-1, 12"X18"		1.50	0001	01
		7-8, R7-1, 12"X18"		1.50	0001	01
		7-9, R7-1, 12"X18"		1.50	0001	01
		8-12, R7-1, 12"X18"		1.50	0001	01
		8-14, R7-1, 12"X18"		1.50	0001	01
		8-22, R7-1, 12"X18"		1.50	0001	01
		8-29, R7-1, 12"X18"		1.50	0001	01
		8-54, R7-1, 12"X18"		1.50	0001	01
		8-55, R7-1, 12"X18"		1.50	0001	01
		DORRANCE STREET				
		8-13, R7-1 SP, 12"X18"		1.50	0001	01
		8-18, R7-1 SP, 12"X18"		1.50	0001	01
		8-19, R7-1 SP, 12"X18"		1.50	0001	01
		8-8, R7-1 SP, 12"X18"		1.50	0001	01
		DYER STREET				
		12-3, R7-1 SP, 12"X18"		1.50	0001	01
		8-20, R7-1SP, 12"X18"		1.50	0001	01
		8-30, R7-1SP, 12"X18'		1.50	0001	01

Distribution of Quantities

Project Name - I-195 Relocation - Contract 14(West side city streets)
Estimate Name - Advertising Estimate November 2012
R.I. Contract No. - 2013-CH-004
FAP Nos: 405-421-633, 405-421-634, BRO-1954(075)

Item No.	Item Code	Description	UM	Qty.	Pay Code	Seq. No.
351	T15.2000 Cont.	2-11, R7-1, 12"X18'		1.50	0001	01
		2-16, R7-1 SP, 12"X18"		1.50	0001	01
		2-2, R7-1, 12"X18"		1.50	0001	01
		2-22, R7-1, 12"X18"		1.50	0001	01
		2-23, R7-1 SP, 12"X18"		1.50	0001	01
		2-9, R7-1, 12"X18"		1.50	0001	01
		3-1, R7-1 SP, 12"X18"		1.50	0001	01
		3-4, R7-1, 12"X18"		1.50	0001	01
		3-5, R7-1, 12"X18"		1.50	0001	01
		POINT STREET				
		14-10, R7-6L, 12"X18"		1.50	0001	01
		14-11, R7-6R, 12"X18"		1.50	0001	01
		14-13, R7-1SP, 12"X18"		1.50	0001	01
		14-18, R7-1SP, 12"X18"		1.50	0001	01
		14-2, R7-1SP, 12"X18"		1.50	0001	01
		14-4, R7-1SP, 12"X18"		1.50	0001	01
		14-6, R7-1SP, 12"X18"		1.50	0001	01
		14-7, R7-1SP, 12"X18"		1.50	0001	01
		14-8, R7-1SP, 12"X18"		1.50	0001	01
		14-9, R7-1SP, 12"X18"		1.50	0001	01
		15-15, R7-1R, 12"X18"		1.50	0001	01
		15-17, R7-1L, 12"X18"		1.50	0001	01
		15-25, R7-1L, 12"X18"		1.50	0001	01
		15-7, R7-1L, 12"X18"		1.50	0001	01
		15-8, R7-1R, 12"X18"		1.50	0001	01
		16-1, R7-1L, 12"X18"		1.50	0001	01
		16-2, R7-1R, 12"X18"		1.50	0001	01
		RICHMOND STREET				
		11-2, R7-1, 12"X18"		1.50	0001	01
		11-3, R7-1 SP, 12"X18"		1.50	0001	01
		3-10, R7-1, 12"X18"		1.50	0001	01
		3-12, R7-1 SP, 12"X18"		1.50	0001	01
		6-12, R7-1 SP, 12"X18"		1.50	0001	01

Distribution of Quantities

Project Name - I-195 Relocation - Contract 14(West side city streets)
Estimate Name - Advertising Estimate November 2012
R.I. Contract No. - 2013-CH-004
FAP Nos: 405-421-633, 405-421-634, BRO-1954(075)

Item No.	Item Code	Description	UM	Qty.	Pay Code	Seq. No.
370	T20.9903 Cont.	151+65, RT		1.00	0001	01
		153+50, RT		1.00	0001	01
		155+20, RT		1.00	0001	01
		155+70, LT		1.00	0001	01
		157+10, RT		1.00	0001	01
		157+35, LT		1.00	0001	01
		158+60, RT		1.00	0001	01
		159+15, LT		1.00	0001	01
		160+75, LT		1.00	0001	01
		160+80, RT		1.00	0001	01
		EDDY STREET				
		162+75 LT, RT		2.00	0001	01
		164+85, RT		1.00	0001	01
		165+30, LT		1.00	0001	01
		165+30, RT		1.00	0001	01
		172+30, RT		1.00	0001	01
		Item T20.9903 Total:		**16.00**		
371	T20.9904	**EPOXY RESIN BICYCLE DETECTION MARKING (BDM)**	**EACH**			
		DYER STREET				
		153+75, RT		1.00	0001	01
		155+40, LT		1.00	0001	01
		Item T20.9904 Total:		**2.00**		
372	702.9950	**BRICK/SOLID BLOCK 4'-0" ROUND MANHOLE - STD3.2.0 MODIFIED**	**EACH**			
		RICHMOND STREET				
		701+31 RT (SMH R04)		1.00	0001	01
		Item 702.9950 Total:		**1.00**		

Distribution of Quantities

Project Name - I-195 Relocation - Contract 14(West side city streets)
Estimate Name - C14 Addendum No. 4
R.I. Contract No. - 2013-CH-004
FAP Nos: 405-421-633, 405-421-634, BRO-1954(075)

Item No.	Item Code	Description	UM	Qty.	Pay Code	Seq. No.
373	702.9951	**PRECAST 4'-0" ROUND MANHOLE - STD 4.2.0 MODIFIED.**	**EACH**			
		CLAVERICK STREET				
		403+14, 5.6' LT (SMH CK-01)		1.00	PDPW	05
		404+60, 5.6' LT (SMH CK-02)		1.00	PDPW	05
		CLIFFORD STREET				
		40+50, BL (SMH CL-01)		1.00	PDPW	05
		41+25, BL (SMH CL-02)		1.00	PDPW	05
		42+75, BL (SMH CL-03)		1.00	PDPW	05
		53+35, BL (SMH CL-14)		1.00	0043	03
		54+65, BL (SMH CL-15)		1.00	0043	03
		DYER STREET				
		155+20, LT (MH 4D29)		1.00	0043	03
		158+75, RT (MH 4D15)		1.00	0043	03
		159+08, 43' RT (SMH D-02)		1.00	PDPW	05
		160+75, 23' RT (SMH D-04)		1.00	PDPW	05
		161+06, 23.9' RT (SMH D-03)		1.00	PDPW	05
		FRIENDSHIP STREET				
		80+50, BL (SMH F-01)		1.00	PDPW	05
		81+75, BL (SMH F-02)		1.00	PDPW	05
		83+25, BL (SMH F-03)		1.00	PDPW	05
		84+75, BL (SMH F-04)		1.00	PDPW	05
		86+20, BL (SMH F-05)		1.00	PDPW	05
		87+50, BL (SMH F-06)		1.00	PDPW	05
		89+00, BL (SMH F-07)		1.00	PDPW	05
		89+65, BL (SMH F-08)		1.00	PDPW	05
		UTILITY CORRIDOR				
		24+50, 3' LT (SMH R-05)		1.00	PDPW	05
		25+10, 2' LT (SMH R-06)		1.00	PDPW	05
		26+40, 2' LT (SMH R-07)		1.00	PDPW	05
		27+00, 10' RT (SMH D-01)		1.00	PDPW	05
		Item 702.9951 Total:		**24.00**		

Distribution of Quantities

Project Name - I-195 Relocation - Contract 14(West side city streets)
Estimate Name - C14 Addendum No. 4
R.I. Contract No. - 2013-CH-004
FAP Nos: 405-421-633, 405-421-634, BRO-1954(075)

Item No.	Item Code	Description	UM	Qty.	Pay Code	Seq. No.
374	T06.5130	**3 INCH SCHEDULE 40 POLYVINYL CHLORIDE PLASTIC CONDUIT - UNDERGROUND**	LF			
		CLIFFORD/CHESTNUT SIGNAL				
		49+45 - 49+95 RT		50.00	0001	01
		CLIFFORD/DORRANCE SIGNAL				
		63+05 - 63+20 RT		20.00	0001	01
		63+05 - CONTROLLER		22.00	0001	01
		63+10, RT		70.00	0001	01
		63+25 - CONTROLLER		10.00	0001	01
		CLIFFORD/RICHMOND SIGNAL				
		CTRL TO 55+22 RT		15.00	0001	01
		DYER/DORRANCE SIGNAL				
		153+35 - 153+75 RT		65.00	0001	01
		153+40 - 153+85 RT		45.00	0001	01
		153+75 RT - CONTROLLER		32.00	0001	01
		154+20 - 154+60 LT		45.00	0001	01
		154+80 - 155+00, LT		25.00	0001	01
		FRIENDSHIP/CHESTNUT SIGNAL				
		90+28 RT - 90+35 RT		8.00	0001	01
		CTRL TO 90+36 LT		7.00	0001	01
		PINE/CHESTNUT SIGNAL				
		59+50 - 59+65, RT		15.00	0001	01
		60+15 - 60+30 RT		20.00	0001	01
		60+30 - 60+40 RT		8.00	0001	01
		Item T06.5130 Total:		**457.00**		
375	T06.5230	**3 INCH SCHEDULE 80 POLYVINYL CHLORIDE PLASTIC CONDUIT - UNDERGROUND**	LF			
		CLIFFORD/CHESTNUT SIGNAL				
		49+95 RT - 50+03 LT		32.00	0001	01
		50+03 LT - 50+50 LT		51.00	0001	01
		50+50 LT - 50+60 RT		50.00	0001	01

Distribution of Quantities

Project Name - I-195 Relocation - Contract 14(West side city streets)
Estimate Name - C14 Addendum No. 4
R.I. Contract No. - 2013-CH-004
FAP Nos: 405-421-633, 405-421-634, BRO-1954(075)

Item No.	Item Code	Description	UM	Qty.	Pay Code	Seq. No.
		CLIFFORD/RICHMOND SIGNAL				
		54+75 LT - 55+28 LT		57.00	0001	01
		54+80 RT - 55+22 RT		45.00	0001	01
		55+28 LT - 55+22 RT		47.00	0001	01
		DYER/DORRANCE SIGNAL				
		153+85 RT - 154+18, LT		70.00	0001	01
		153+85 RT - 154+60, RT		80.00	0001	01
		154+60 LT - 154+30, LT		70.00	0001	01
		FRIENDSHIP/CHESTNUT SIGNAL				
		89+65 LT - 89+71 RT		38.00	0001	01
		89+71 RT - 90+28 RT		65.00	0001	01
		90+36 LT - 90+42 RT		41.00	0001	01
		Item T06.5230 Total:		**646.00**		
376	T06.5430	**3 INCH SCHEDULE 80 POLYVINYL CHLORIDE PLASTIC CONDUIT - UNDER EXISTING PAVEMENT**	LF			
		CLIFFORD/DORRANCE SIGNAL				
		62+40 - 62+50, RT		35.00		
		62+40 - 63+15, RT		75.00		
		62+45 - 63+10, LT		65.00		
		PINE/CHESTNUT SIGNAL				
		59+50, RT - 59+50, LT		40.00		
		59+60 - 60+15, RT		55.00		
		60+20, LT - 60+30, RT		40.00		
		Item T06.5430 Total:		**310.00**		

Improvements to I-195
Contract 14
RIC 2013-CH-004
Sign Post Mounting Table

	Sign Number	MUTCD Number	Mount
Signing & Pavement Marking Plan No. 1	1-1	R4-11	Light Pole
	1-3	R7-1	24.6.0
	1-4	R7-1 SP	24.6.0
	1-5	R7-1	24.6.0
	1-6	R4-11	Light Pole
	1-9	R7-1	
	1-7	R10-15	24.2.0
	1-8	R7-1	24.6.0
Singin & Pavement Marking Plan No. 2	2-1	R7-1	24.6.0
	2-2	R7-1 SP	Light Pole
	2-3	R5-1	24.2.0
	2-4	R7-1 SP	Light Pole
	2-5	R3-2	24.2.0
	2-6	R6-1L	
	2-7	R1-1	24.2.0
	2-26	R6-1R	
	2-8	R7-1	24.6.0
	2-9	R7-1	24.6.0
	2-10	R7-1 SP	24.6.0
	2-11	R7-1	24.6.0
	2-12	R7-1 SP	24.6.0
	2-13	R7-1 SP	24.6.0
	2-14	R6-1L	Signal Pole
	2-15	R6-1R	
	2-19	R5-1	
	2-16	R7-1 SP	Light Pole
	2-17	R7-1 SP	24.6.0
	2-18	R7-1 SP	24.6.0
	2-20	R6-1L	Signal Pole
	2-21	R6-1R	
	2-22	R7-1	24.6.0
	2-23	R7-1 SP	Light Pole
	2-28	R4-11	
	2-24	R7-1 SP	Light Pole
	2-25	R4-11	Light Pole
	2-27	R4-11	24.2.0
	2-29	R4-11	24.2.0
	2-30	R4-11	Light Pole
	2-31	R6-1L	Light Pole
	2-39	R3-5	

Improvements to I-195
Contract 14
RIC 2013-CH-004
Sign Post Mounting Table

	Sign Number	MUTCD Number	Mount
	2-32	R5-1	Signal Pole
	2-33	R5-1	Signal Pole
	2-34	R6-1L	
	2-35	R6-1R	
	2-36	R3-1	24.2.0
	2-37	W6-3	24.2.0
	2-38	W16-9P	24.2.0
	SS-1	Claverick St	Street Sign Pole
	SS-2	Friendship St	
Signing & Pavement Marking Plan No. 3	3-1	R7-1 SP	24.6.0
	3-2	R6-1R	24.2.0
	3-3	R6-1L	24.2.0
	3-4	R7-1	Light Pole
	3-5	R7-1	24.6.0
	3-7	R6-1R	Signal Pole
	3-8	R5-1	
	3-10	R7-1	24.6.0
	3-11	R6-1R	Light Pole
	3-12	R7-1 SP	24.6.0
	3-14	R4-11	24.2.0
Signing & Pavement Marking Plan No. 4	4-1	R7-1 SP	24.6.0
	4-2	R7-1	24.6.0
	4-3	R3-2	24.2.0
	4-4	M4-5	24.2.0
	4-5	M1-1	24.2.0
	4-6	M3-3	24.2.0
	4-7	M6-3	
	4-8	M4-5	
	4-9	M1-1	
	4-10	M3-1	
	4-11	M6-1	
	4-12	R7-1	24.6.0
	4-13	R7-1 SP	24.6.0
	4-14	R4-11	24.2.0

Improvements to I-195
Contract 14
RIC 2013-CH-004
Sign Post Mounting Table

	Sign Number	MUTCD Number	Mount
Signing & Pavement Marking Plan No. 5	5-1	R7-1	24.6.0
	5-2	R6-1L	24.2.0
	5-3	R6-1R	
	5-5	R7-1 SP	Light Pole
	5-6	R5-1	24.2.0
	5-10	R6-1R	
	5-11	R6-1L	
	5-7	R7-1	24.6.0
	5-8	R5-1	Light Pole
	5-13	R7-1	
	5-9	R1-5	24.2.0
	5-12	R1-1	24.2.0
	5-14	R7-1	24.6.0
	5-15	R7-1 SP	24.6.0
	5-16	R7-1 SP	24.6.0
	5-17	R6-1R	Signal Pole
	5-18	R7-1	24.6.0
	5-19	R7-1	Light Pole
	5-20	R6-1R	Signal Pole
	5-21	R7-1 SP	24.6.0
	5-22	R6-1L	24.2.0
	5-23	R5-1	24.2.0
	5-24	R1-1	24.2.0
	5-25	R6-1R	
	5-26	R7-1 SP	24.6.0
	5-27	R7-1	24.6.0
	5-28	R6-1L	24.2.0
	5-29	R1-1	24.2.0
	5-30	R4-11	24.2.0
	5-32	R4-11	24.2.0
	5-34	R4-11	Light Pole
	5-35	R4-11	24.2.0
	5-4	R1-1	Street Sign Pole
	SS-1	Claverick St	
	SS-8	Clifford St	
	SS-1	Claverick St	Street Sign Pole
	SS-8	Clifford St	
	SS-8	Clifford St	Street Sign Pole
	SS-17	ShiP St	

Improvements to I-195
Contract 14
RIC 2013-CH-004
Sign Post Mounting Table

	Sign Number	MUTCD Number	Mount
Signing & Pavement Marking Plan No. 6	6-1	R7-1 SP	24.6.0
	6-2	R6-1L	Signal Pole
	6-3	R6-1R	
	6-4	R7-1	24.6.0
	6-5	R7-1	24.6.0
	6-6	R7-1	Light Pole
	6-7	R7-1 SP	24.6.0
	6-18	R4-11	
	6-8	R7-1	24.6.0
	6-9	R7-1	Light Pole
	6-10	R6-1L	Signal Pole
	6-20	R6-1R	
	6-11	R5-1	24.2.0
	6-12	R7-1 SP	24.6.0
	6-13	R6-1R	24.2.0
	6-14	R3-2	24.2.0
	6-16	R4-11	Light Pole
	6-17	R4-11	24.2.0
	6-21	M4-5	Light Pole
	6-22	M1-1	
	6-23	R6-1L	24.2.0
	6-24	R5-1	24.2.0
Signing & Pavment Marking Plan No. 7	7-1	R7-1	24.6.0
	7-2	R7-1	24.6.0
	7-3	R6-1R	24.2.0
	7-4	R3-2	
	7-5	R6-1L	24.2.0
	7-6	R3-1	
	7-7	R1-1	24.2.0
	7-8	R7-1	24.6.0
	7-9	R7-1	24.6.0
	SS-7		Street Sign Pole
	SS-8		

Improvements to I-195
Contract 14
RIC 2013-CH-004
Sign Post Mounting Table

	Sign Number	MUTCD Number	Mount
Signing & Pavment Marking Plan No. 8	8-4	R7-1 SP	24.6.0
	8-5	R7-1	24.6.0
	8-6	W11-2	24.2.0
	8-7	W16-7E	24.2.0
	8-8	R7-1 SP	24.6.0
	8-9	M4-5	Light Pole
	8-10	M1-1	
	8-11	M6-1L	
	8-12	R7-1	24.6.0
	8-51	R4-11	24.2.0
	8-13	R7-1 SP	
	8-52	R4-11	24.2.0
	8-14	R7-1	
	8-15	R6-1L	24.2.0
	8-16	R6-1R	
	8-17	R6-1L	24.2.0
	8-21	R6-1R	
	8-26	R5-1	
	8-18	R7-1 SP	24.6.0
	8-50	R4-11	24.2.0
	8-19	R7-1 SP	
	8-20	R7-1 SP	24.6.0
	8-22	R7-1	24.6.0
	8-23	M4-5	24.2.0
	8-53	R4-11	
	8-23	M4-5	Signal Pole
	8-24	R7-1	
	8-25	M6-3	
	8-29	R7-1	24.6.0
	8-30	R7-1 SP	24.6.0
	8-31	M4-5	24.2.0
	8-32	M1-1	
	8-33	M6-1R	
	8-34	R3-2	24.2.0
	8-35	R1-1	Street Sign Pole
	SS-8	Clifford St	
	SS-12	Orange St	
	8-36	R7-1	24.6.0
	8-37	R6-1L	24.2.0
	8-38	R5-1	

Improvements to I-195
Contract 14
RIC 2013-CH-004
Sign Post Mounting Table

	Sign Number	MUTCD Number	Mount
	8-39	R6-1R	24.2.0
	8-54	R3-2	
	8-40	R7-1	24.6.0
Signing & Pavment Marking Plan No. 8	8-41	M4-5	24.2.0
	8-42	M1-1	
	8-43	M6-1R	
	8-46	R1-1	24.2.0
	8-47	R6-1R	24.2.0
	8-48	R3-17	Light Pole
	8-49	R4-11	24.2.0
	8-50	R4-11	24.2.0
	8-54	R7-1	24.2.0
	8-55	R7-1	24.2.0
	8-55	R3-17	24.2.0
	8-58	R3-17	Light Pole
	8-59	R3-17BP	
	SS-9	Dorrance St	Street Sign Pole
	SS-10	Dyer St	
Signing & Pavement Marking Plan No. 10	10-1	R6-1R	24.2.0
	10-7	R3-2	
	10-2	R1-1	24.2.0
	10-3	R7-1R	24.6.0
	10-4	R7-1L	24.6.0
	10-5	R7-1R	24.6.0
	10-6	R7-1L	24.6.0
	SS-15	Bassett St	Street Sign Pole
	SS-16	Hoppin St	
Signing & Pavement Marking Plan No. 11	11-1	R1-1	Street Sign Pole
	SS-17	Ship St	
	SS-18	Richmond St	
	11-2	R7-1	24.6.0
	11-3	R7-1 SP	24.2.0
	11-10	R4-11	

Improvements to I-195
Contract 14
RIC 2013-CH-004
Sign Post Mounting Table

	Sign Number	MUTCD Number	Mount
Signing & Pavement Marking Plan No. 12	12-1	R2-1	Light Pole
	12-2	R2-1	24.2.0
	12-3	R7-1 SP	24.6.0
	12-4	R3-17	Light Pole
	12-5	R3-17	24.2.0
Signing & Pavment Marking Plan No. 13	13-1	R7-1	24.6.0
	13-2	R7-1	Light Pole
	13-3	R1-1	Street Sign Pole
	SS-17	Ship St	
	SS-7	Eddy St	
	13-4	W11-2	24.2.0
	13-5	W16-7P	
	13-6	R1-1	Street Sign Pole
	SS-17	Ship St	
	SS-7	Eddy St	
	13-7	R7-1 SP	24.6.0
	13-8	W11-2	24.2.0
	13-9	W16-7P	
	13-10	R7-1 SP	24.6.0
	13-11	R1-5	24.2.0
	13-12	R1-5	24.2.0
	13-14	R3-17	24.2.0
Signing & Pavement Marking Plan No. 14	14-1	R1-1	Street Sign Pole
	SS-5	Parsonage St	
	SS-6	Point S	
	14-2	R7-1 SP	24.6.0
	14-3	R1-1	Street Sign Pole
	14-12	W14-1	
	SS-5	Parsonage St	
	SS-6	Point St	
	14-4	R7-1 SP	24.6.0
	14-5	R1-1	Street Sign Pole
	SS-4	Chestnut st	
	SS-6	Point St	
	14-6	R7-1 SP	24.6.0
	14-7	R7-1 SP	24.6.0
	14-8	R7-1 SP	24.6.0

Improvements to I-195
Contract 14
RIC 2013-CH-004
Sign Post Mounting Table

	Sign Number	MUTCD Number	Mount
Signing & Pavement Marking Plan No. 14	14-9	R7-1 SP	24.6.0
	14-10	R7-6L	24.6.0
	14-11	R7-6R	Light Pole
	14-13	R7-1 SP	24.6.0
	14-14	R1-1	Light Pole
	14-15	M4-5	Street Sign Pole
	14-16	M1-1	
	14-17	M6-1L	
	SS-18	Richmond St	
	SS-6	Point St	
	14-18	R7-1SP	24.6.0
	SS-3	Hospital St	Street Sign Pole
	SS-6	Point St	
Signing & Pavement Marking Plan No. 15	15-2	R4-7	24.2.0
	15-3	R3-2	24.2.0
	15-4	R7-1L	24.6.0
	15-5	R7-1	Light Pole
	15-20	R4-11	
	15-6	R4-7	24.2.0
	15-7	R7-1L	24.6.0
	15-8	R7-1R	24.6.0
	15-10	W11-2	24.2.0
	15-11	W16-7P	
	15-12	W11-2	24.2.0
	15-13	W16-7P	
	15-14	R4-7	24.2.0
	15-15	R7-1R	24.6.0
	15-16	R4-7	24.2.0
	15-17	R7-1L	24.6.0
	15-18	R3-17	24.2.0
	15-19	R4-11	24.2.0
	15-21	R4-11	24.2.0
	15-22	R4-11	24.2.0
	15-23	R4-11	24.2.0
	15-24	R3-7L	24.2.0
	15-25	R7-1L	24.6.0

Improvements to I-195
Contract 14
RIC 2013-CH-004
Sign Post Mounting Table

	Sign Number	MUTCD Number	Mount
Signing & Pavement Marking Plan No. 16	16-1	R7-1L	24.6.0
	16-2	R7-1R	24.6.0
	16-3	R4-11	24.2.0
	16-4	R4-11	24.2.0
	16-5	R4-7	24.2.0
	16-6	OM3-L	
Signing & Pavement Marking Plan No. 17	17-1	R3-8	24.2.0
	17-8	R4-11	
	17-2	R1-1	24.2.0
	17-3	R1-2	24.2.0
	17-4	R5-1	
	17-5	R7-1	24.6.0
	17-6	R5-1	24.2.0
	17-7	R1-2	
	17-9	R4-11	24.2.0
	17-10	R3-17	24.2.0
	17-12	R3-17BP	
	17-11	R4-7	24.2.0

Improvements to I-195
Contract 14
RIC 2013-CH-004
Sign Post Mounting Table

	Sign Number	MUTCD Number	Mount
Signing & Pavement Marking Plan No. 18	18-1	R7-1	Light Pole
	18-2	R1-1	Street Sign Post
	SS-7	Eddy St	
	SS-19	South St	
	18-3	R7-1	Light Pole
	18-4	R1-1	
	18-5	R7-1	24.6.0
	18-6	R7-1	24.6.0
	18-7	R7-1	24.6.0
	18-8	R7-1	24.6.0
	18-9	R1-1	Street Sign Post
	SS-7	Eddy St	
	SS-20	Elm st	
	18-10	R1-1	Street Sign Post
	SS-7	Eddy St	
	SS-20	Elm St	
	18-11	R7-1	24.6.0
	18-12	R7-1	24.2.0
	18-16	R3-17	
	18-13	R4-11	24.2.0
	18-14	R3-17	24.2.0
	18-15	R3-17	Light Pole
	18-17	R3-17	24.2.0
	18-18	R3-17BP	
	SS-7	Eddy St	Street Sign Post
	SS-19	South St	

Revised: 2/19/2002

Total or gross sum of bid for Rhode Island Contract Number: 2013-CH-004

Federal-Aid Project Number(s): 405-421-633, 405-421-634, BRO-1954(075)

WRITTEN IN WORDS:

The undersigned bidder declares that this Proposal is made without connection with any other person or persons making proposals for the same work, and is in all respects fair and without collusion or fraud. The undersigned bidder submits herewith, a proposal guarantee in the form of a bid bond in favor of the State of Rhode Island in the amount of 5% of the total or gross sum of the bid and agrees and consents that the proposal guarantee shall be forfeited to the State as liquidated damages if the required contract agreement and contract bond are not executed within ten(10) days of the notice of award. All surety companies must be listed with The Department of the Treasury, Fiscal Services, Circular 570, (Latest Revision published by The Federal Register). The State reserves the right to retain the surety of all bidders until the successful bidder enters into the Contract or until such time as the award or cancellation of the Contract is announced at which point Sureties will be returned to all bidders by the State of Rhode Island, Office of Purchases. The undersigned bidder further agrees, if awarded the contract on this proposal, to begin work within ten (10) calendar days after the date of execution of the contract unless otherwise specified under special provisions or permitted by the Engineer, and further agrees to complete the work on or before the dates outlined in the Contract Documents.

COMPLETION DATE(S)

DESCRIPTION	DATE
Advertise Date	November 16, 2012
Pre-Bid Date	November 27, 2012
Bid-Opening Date	December 12, 2012
Substantial Completion Date	October 30, 2014

THE BIDDER ACKNOWLEDGES RECEIPT OF THE FOLLOWING:

ADDENDA	DATE POSTED
NO.1	November 27, 2012
NO.2	November 30, 2012
NO.3	November 30, 2012
NO.4	December 4, 2012

DOCUMENT(S)	PAGE
1. Status Certification for: Debarment, Eligibility, Indictments, Convictions or Civil Judgements	1
2. Anti-Collusion Certificate	2
4. DBE Affirmative Action Certification	3 - 9
3. Disclosure of Lobbying Activities	

Total or gross sum of bid for Rhode Island Contract Number: 2013-CH-004

Federal-Aid Project Number(s): 405-421-633, 405-421-634, BRO-1954(075)

Whoever, being an officer, agent, or employee of the United States, or of any State, or Territory, or whoever, whether a person, association, firm, or corporation, knowingly makes any false statement, false representation, or false report as to the character, quality, quantity, or cost of the material used or to be used, or the quantity or quality of the work performed or to be performed, or the costs thereof in connection with the submission of plans, maps, specifications, contracts, or costs of construction of any highway or related project submitted for approval to the Secretary of Transportation; or Whoever, knowingly makes any false statement, false representation, false report, or false claim with respect to the character, quality, quantity, or cost of any work performed or to be performed, or materials furnished or to be furnished, in connection with the construction of any highway or related project approved by the Secretary of Transportation; or Whoever, knowingly makes any false statement or false representation as to a material fact in any statement, certificate, or report submitted pursuant to the provisions of the Federal-aid Road Act approved July 11, 1916 (39 Stat. 355), as amended and supplemented, Shall be fined not more than $10,000 or imprisoned not more than five years, or both. By signing here the signee agrees that the disk submitted is the same as the paper submitted and that any discrepancies may result in disqualification of the bid.

BEING EITHER A (INDIVIDUAL, PARTNERSHIP,)
(OR CORPORATION INCORPORATED)
(UNDER THE LAWS OF ANY STATE)
(IN THE UNITED STATES OF AMERICA)

_____

Contractor

COMPOSED OF OFFICERS, PARTNERS
OR OWNER, AS FOLLOWS.

_____

President

_____

Vice-President

_____

Secretary

_____

Treasurer

Address _____

_____

CERTIFICATION SUMMARY: I hereby certify that I have read all of the above requirements and understand that it affects the acceptablility of my bid(s).

_____

Name of Signatore - Title Date

DRAINAGE PLAN SYMBOLS

EXISTING		NEW
(SIZE) RSC	RIGID STEEL CONDUIT	(Length, Size, Material) RSC
(SIZE) UD	UNDERDRAIN	(Length, Size, Material) UD
(SIZE) D	STORM DRAIN	(Length, Size, Material) D
(SIZE) S	SANITARY SEWER	(Length, Size, Material) S
(SIZE) W	WATER MAIN	(Length, Size, Material) W
(SIZE) G	GAS MAIN	(Length, Size, Material) G
(SIZE) T	TELEPHONE DUCT	(Length, Size, Material) T
(SIZE) E	ELECTRIC DUCT	(Length, Size, Material) E
(SIZE) D	FLARED END SECTION	
(SIZE) D	HEADWALL	
	LIMIT OF DISTURBANCE	L.O.D.
	ABANDONED UTILITY	
	UTILITY TO BE ABANDONED	
	PIPE TO BE REMOVED AND DISPOSED	
	AREA GRADED TO DRAIN	
	DIRECTIONAL FLOW ARROWS	
A1 A2 A3	FLAGGED EDGE OF WETLAND	
	RI STANDARD 3.2.0, 3.2.1	
	RI STANDARD 3.3.2, 3.5.0	
	RI STANDARD 3.3.4, 3.3.5	
	RI STANDARD 3.4.0, 3.4.1	
	RI STANDARD 4.2.0, 4.2.1, 4.2.2	
	ELECTRICAL TRANSMISSION TOWER	
	RI STANDARD 4.3.0	
	PROPOSED TELEPHONE STRUCTURE	
	RI STANDARD 4.4.0	
	RI STANDARD 4.5.0 – 4.5.2	
	RI STANDARD 9.1.0	
	RI STANDARD 9.6.0	
	FLOW CONTROL STRUCTURE	
	WATER VALVE & GATE BOX	WV

ABBREVIATIONS

RCP	REINFORCED CONCRETE PIPE
DIP	DUCTILE IRON PIPE
HDPE	HIGH DENSITY POLYETHYLENE PIPE
CMP	CORRUGATED METAL PIPE
C.I.	CAST IRON
CCVE	CLOSED CIRCUIT VIDEO EQUIPMENT
DMS	DYNAMIC MESSAGE SIGN
CRMC	COASTAL RESOURCES MANAGEMENT COUNCIL
S/L	STREET LIGHT (CONDUIT)

DRAINAGE & UTILITY LEGEND

3.2.2	SOLID BLOCK SHALLOW 4'–0" OR 5'–0" ROUND MANHOLE, R.I. STD 3.2.2
3.3.1	BRICK/SOLID BLOCK DRIVEWAY BASIN AND GUTTER INLET, R.I. STD. 3.3.1
3.3.4	BRICK/SOLID BLOCK DOUBLE GRATE CATCH BASIN, GRATE PARALLEL TO EDGE OF PAVEMENT, R.I. STD 3.3.4
3.3.5	BRICK/SOLID BLOCK DOUBLE GRATE CATCH BASIN GRATE PERPENDICULAR TO EDGE OF PAVEMENT, R.I. STD 3.3.5
3.5.2	SOLID BLOCK SHALLOW DOUBLE GRATE CATCH BASIN GRATE PARALLEL TO CURB, R.I. STD 3.5.2
4.2.2M	PRECAST MANHOLE, 8' DIAMETER, R.I. STD 4.2.2M
4.4.0D	PRECAST 4'–0", 5'–0",OR 6'–0" ROUND CATCH BASIN R. I. STD. 4.4.0 (4'–0" ø UNLESS NOTED OTHERWISE) – 4' SUMP
4.7.0M	TOP COVER FOR 4'–0" OR 6'–0" SQUARE CATCH BASINS AND MANHOLES R.I. STD 4.7.0, MODIFIED – OMIT OPENING AND OPENING REINFORCEMENT (SEE ITEM CODE 702.9920)
4.2.0P	PRECAST 4'–0" ROUND MANHOLE – STD. 4.2.0 MODIFIED. OPENING TO ALLOW FOR PROVIDENCE STD. MANHOLE FRAME AND COVER.
3.2.0P	BRICK/SOLID BLOCK 4'–0" ROUND MANHOLE – STD. 3.2.0 MODIFIED. OPENING TO ALLOW FOR PROVIDENCE STD. MANHOLE FRAME AND COVER.
ABNCB	ABANDON CATCH BASIN IN PLACE, R&D FRAME AND GRATE, FILL WITH CLSM
ABNMH	ABANDON MANHOLE IN PLACE, R&D FRAME AND COVER, FILL WITH CLSM
ACOM	ADJUST COMMUNICATIONS HANDHOLE
AMP	ADJUST WATER METER PIT FRAME & COVER
PB–X	DRAINAGE BYPASS STRUCTURE
BLKHD	TEMPORARY BULKHEAD
CCC	CONNECTING COLLAR, 48" HDPE TO EXISTING PIPE
CFP	CLEAN AND FLUSH PIPE
CLSM	CONTROLLED LOW STRENGTH MATERIAL, CLASS II (FLOWABLE FILL)
CSMH	CLEAN SANITARY MANHOLE
COS	CLEAN OUT STRUCTURE
DEMH	DISPOSE ELECTRIC MANHOLE
DGP	REMOVE AND DISPOSE GAS PIPE (ALL TYPES AND SIZES)
DHYD	REMOVE AND DISPOSE HYDRANT
DLP	REMOVE AND DISPOSE LIGHT POLE
DLPF	REMOVE AND DISPOSE LIGHT POLE & FOUNDATION
DLSF	REMOVE AND DISPOSE LIGHT STANDARD FOUNDATION
DPC	REMOVE AND DISPOSE PLUG AND CAP
DSMH	DISPOSE SANITARY MANHOLE
DUD	REMOVE AND DISPOSE EXISTING UTILITY DUCT
DWV	REMOVE AND DISPOSE WATER VALVE & GATE BOX
HYD	FURNISH AND INSTALL NEW FIRE HYDRANT
PCP	PLUG AND CAP PIPE – ALL TYPES AND SIZES
PSM	PROVIDENCE STANDARD 32" LOCKING MANHOLE FRAME AND COVER.
P3.4	PROVIDENCE STANDARD CATCH BASIN FRAME P3 AND COVER STANDARD P4
P17	PROVIDENCE STANDARD GRANITE INLET STONE STANDARD P17
P18	PROVIDENCE STANDARD GRANITE APRON STONE STANDARD P18
P20	PROVIDENCE STANDARD SEWER MANHOLE STANDARD P20
RCB	RECONSTRUCT CATCH BASIN OR INLET AS REQUIRED, AND ADJUST TO GRADE
RCBW	RECONSTRUCT CATCH BASIN OR INLET / CORBEL / WALLS AND ADJUST TO GRADE
R&D	REMOVE AND DISPOSE
RMH	RECONSTRUCT MANHOLE / CORBEL / WALLS AS REQUIRED AND ADJUST TO GRADE
RMHW	RECONSTRUCT MANHOLE / VERTICAL WALLS AND ADJUST TO GRADE
RRLP	REMOVE AND RESET EXISTING LIGHT STANDARD (BY OTHERS)
RSMH	RECONSTRUCT SANITARY MANHOLE AS REQUIRED, DISPOSE EXISTING FRAME AND COVER.

EROSION CONTROL NOTES

1. THE FOLLOWING NOTES ARE MEANT TO SUPPLEMENT THE STANDARD CONTRACT NOTES. REFER TO STANDARD NOTES–1 FOR ADDITIONAL DRAINAGE & EROSION CONTROL NOTES.
2. EROSION CONTROLS SHALL BE INSTALLED AS SHOWN ON THE PLANS. EROSION CONTROLS ARE SHOWN ON THE DRAINAGE & UTILITY, SITE PREPARATION AND MP&T PLANS.
3. ADDITIONAL EROSION CONTROLS, NOT SHOWN ON THESE PLANS, SHALL BE INSTALLED AS CONDITIONS WARRANT, OR AS DIRECTED BY THE RIDOT RESIDENT ENGINEER. THESE ADDITIONAL ITEMS WILL BE PAID AT THE UNIT PRICE FOR THAT BID ITEM.
4. DURING CONSTRUCTION, THE CONTRACTOR SHALL BE RESPONSIBLE FOR ALL EROSION CONTROL MAINTENANCE AND SHALL INSPECT/REPLACE ALL CONTROLS AS NEEDED. MAINTENANCE SHALL BE CARRIED OUT IN ACCORDANCE WITH SECTION 212 OF THE RIDOT STANDARD SPECIFICATION, 2004 EDITION. THE CONTRACTOR IS RESPONSIBLE FOR CARRYING OUT NECESSARY MAINTENANCE DURING ALL PHASES OF PROJECT CONSTRUCTION, INCLUDING PERIODS OF "WINTER SHUTDOWN".
5. NO UNDISTURBED AREAS WILL BE CLEARED OF EXISTING VEGETATION AFTER OCTOBER 15 OF ANY CALENDAR YEAR.
6. ALL HAY BALES AND SILT FENCE ARE TO BE INSTALLED WITH THE LOWER 6 INCHES BURIED AND BACKFILLED WITH COMPACTED SOIL MATERIAL. WHEN USED IN COMBINATION, A SUFFICIENT AMOUNT OF SILT FENCE SHALL BE PLACED IN THE TRENCH SUCH THAT HAY BALE STAKES ARE DRIVEN THROUGH THE FABRIC OF THE FENCE.

TRENCH SUPPORT SYSTEMS

TRENCH SUPPORT SYSTEM(S) SHALL BE REQUIRED FOR THE INSTALLATION OF PROPOSED DRAINAGE SYSTEMS, SANITARY SEWERS AND/ OR OTHER CONTRACT UTILITIES AT LOCATIONS WHERE OPEN EXCAVATION MAY CAUSE FAILURE TO ADJACENT UTILITIES OR ROADWAYS. DESIGN, INSTALLATION AND REMOVAL OF THESE SYSTEMS SHALL BE CONSIDERED INCIDENTAL TO THE WORK AND INCLUDED IN THE COST OF THE CONTRACT DRAINAGE AND UTILITY ITEMS. NO SEPARATE PAYMENT SHALL BE MADE FOR TEMPORARY TRENCH SUPPORT SYSTEMS.

SUPPORT OF EXISTING UTILITIES

INSTALLATION OF PROPOSED DRAINAGE, SANITARY SEWERS AND/ OR OTHER CONTRACT UTILITIES SHALL REQUIRE THE SUPPORT OF EXISTING UTILITIES. SUPPORT OF EXISTING UTILITIES SHALL BE CONSIDERED INCIDENTAL TO THE WORK. NO SEPARATE PAYMENT SHALL BE MADE FOR THE SUPPORT OF EXISTING UTILITIES.

DRAINAGE & UTILITY NOTES

1. THE CONTRACTOR SHALL CHECK AND VERIFY THE LOCATION OF ALL EXISTING UTILITIES, BOTH UNDERGROUND AND OVERHEAD, IN ACCORDANCE WITH "DIG SAFE PROGRAM LAW" ENACTED BY RHODE ISLAND LEGISLATURE BILL NO. 795–391, WHICH BECAME EFFECTIVE JULY 1, 1979. ANY DAMAGE TO EXISTING ACTIVE UTILITIES WHICH ARE SHOWN ON THE PLANS OR DETAILED BY DIG SAFE SHALL BE THE CONTRACTOR'S RESPONSIBILITY. DAMAGES TO UTILITIES WHICH ARE NOT SHOWN ON THE PLANS OR LOCATED BY DIG SAFE, AND ASSOCIATED SERVICE CONNECTIONS, WILL BE PAID FOR BY THE DEPARTMENT. THE LOCATIONS OF ALL UTILITIES AS SHOWN ON THE PLANS ARE APPROXIMATE AND IT IS THE CONTRACTOR'S RESPONSIBILITY TO VERIFY THE EXACT LOCATION OF EACH UTILITY.
2. ALL DUCTILE IRON SEWER AND/OR DRAIN PIPES SHALL BE ANSI CLASS 52 WITH PUSH–ON JOINTS UNLESS NOTED OTHERWISE. ALL WATER PIPE SHALL BE CEMENT LINED, WITH MECHANICAL JOINTS AS SPECIFIED AND CONFORM TO THE PROVIDENCE WATER SUPPLY BOARD SPECIFICATIONS UNLESS OTHERWISE NOTED.
3. EACH UTILITY COMPANY IS TO BE NOTIFIED BEFORE ANY WORK IMPACTING THEIR UTILITIES BEGINS. SEE CS PAGES FOR MORE INFORMATION.
4. WHEN A CATCH BASIN, DROP INLET OR MANHOLE IS REMOVED AND DISPOSED, THE COST OF PLUGGING THE PIPES SHALL BE INCLUDED IN THE COST OF THE REMOVAL FOR THE APPLICABLE STRUCTURE.
5. ALL CATCH BASIN SUMPS AND MANHOLE INVERTS SHALL BE WATERTIGHT. CATCH BASINS AND/OR MANHOLES SHALL BE 4' DIAMETER OR 4' SQUARE UNLESS OTHERWISE NOTED ON THE PLANS.
6. WHEN ABANDONED PIPES AND/OR CONDUITS ARE IN AREAS OF TRENCH EXCAVATION, NO SEPARATE PAYMENT WILL BE MADE FOR THEIR REMOVAL AND DISPOSAL. PAYMENT FOR THIS WORK SHALL BE INCLUDED UNDER THE APPLICABLE DRAINAGE & UTILITY INSTALLATION ITEMS.
7. CATCH BASIN LOCATIONS ARE TO THE CENTER OF THE DRAINAGE STRUCTURE.
8. "CUT–INS": NO SEPARATE PAYMENT SHALL BE MADE FOR MANHOLE OR CATCH BASIN CUT–INS. THE COST OF THIS WORK SHALL BE INCLUDED IN THE LINEAR FOOT COST OF THE PIPE AND IN ACCORDANCE WITH SECTION 710 OF THE SPECIFICATIONS.
9. ALL UNDERDRAINS SHALL BE "CUT–IN" TO DRAINAGE STRUCTURES. THIS WORK SHALL BE INCLUDED IN THE COST OF THE UNDERDRAIN.
10. THE CONTRACTOR SHALL SCHEDULE HIS OPERATIONS SO THAT ALL DRAINAGE AND UTILITIES TO BE INSTALLED BY HIM AND/OR HIS SUBCONTRACTOR WILL BE COMPLETED WITHIN THE APPLICABLE LIMITS PRIOR TO MAKING THOSE SITE(S) AVAILABLE FOR PROPOSED UTILITY COMPANY INSTALLATION BY OTHERS.
11. BUILDING SERVICE CONNECTIONS ARE SHOWN WHERE INFORMATION WAS AVAILABLE. THE CONTRACTOR SHALL ASSUME THAT ALL SERVICES (ELECTRIC, TELEPHONE, WATER, SANITARY, GAS, STORM) ARE PRESENT AT ALL BUILDINGS AND SHALL CHECK THE LOCATIONS WITH THE APPROPRIATE UTILITY AGENCIES.
12. EXISTING UTILITY SERVICES SHALL BE MAINTAINED AT ALL TIMES.
13. CATCH BASIN GRATES AT CURBLINES SHALL BE DEPRESSED BELOW THE GUTTER LINE GRADE IN ORDER TO INTERCEPT RUNOFF. CATCH BASIN RIM ELEVATIONS SHOWN ARE 0.10 FEET BELOW THE FINAL CALCULATED GUTTER LINE GRADE.
14. RIM ELEVATIONS SHOWN ON THE DRAINAGE & UTILITY PLANS ARE FINAL ELEVATIONS. PHASE CONSTRUCTION MAY REQUIRE RIMS TO BE SET AT INTERIM ELEVATIONS TO BE DETERMINED BY THE CONTRACTOR BASED ON HIS CONSTRUCTION SEQUENCE. GRATES OR COVERS THAT FALL WITHIN A TRAVEL LANE DURING THE SEQUENCE OF CONSTRUCTION SHALL BE SET FLUSH WITH THE PAVEMENT. ADJUSTMENT OF GRATES AND COVERS TO THE FINAL GRADE SHALL BE PAID UNDER ITEM CODES 707.0900 AND 707.1100.
15. ALL DROP INLETS AND CATCH BASINS WITH CURB STONES OR BARRIER SHALL HAVE 3 FLANGED FRAMES AND GRATES. ALL DROP INLETS AND CATCH BASINS WITHOUT CURB STONES OR BARRIER SHALL HAVE 4 FLANGED FRAMES AND GRATES.
16. THE CONTRACTOR SHALL SEQUENCE ALL CONSTRUCTION SUCH THAT STORM WATER SHALL FLOW INTO AN ACTIVE OUTFALL AT ALL TIMES WITHOUT FLOODING ANY TRAVEL WAY, PEDESTRIAN WAY, PUBLIC OR PRIVATE PROPERTY. THIS MAY REQUIRE USING MEASURES SUCH AS TEMPORARY PIPES, BY–PASS PUMPING, TEMPORARY CHANNELS, BERMS, ETC. THE COST OF THESE MEASURES, THE INSTALLATION AND REMOVAL, MAINTENANCE, ALL LABOR, EQUIPMENT, MATERIALS AND INCIDENTALS SHALL BE INCLUDED WITH THE COST OF THE DRAINAGE ITEMS IN THE CONTRACT. NO SEPARATE PAYMENT SHALL BE MADE FOR PROVIDING TEMPORARY DRAINAGE MEASURES.
17. THE CONTRACTOR SHALL PLACE R.I. STD. 9.8.0 CATCH BASIN INLET PROTECTION AT NEW AND EXISTING CATCH BASINS AS DIRECTED BY THE RESIDENT ENGINEER OR AS REQUIRED BY THE CRMC ASSENT AND DEM PERMIT.
18. PROVIDENCE MEAN LOW WATER IS 4.70 FEET BELOW PROVIDENCE MEAN HIGH WATER.
19. THE CONTRACTOR SHALL READ, BECOME FAMILIAR WITH, AND ADHERE TO ALL THE PROVISIONS AND STIPULATIONS STATED IN THE PERMITS ISSUED FOR THIS PROJECT FROM THE DEPARTMENT OF ENVIRONMENTAL MANAGEMENT, ARMY CORPS OF ENGINEERS, AND THE COASTAL RESOURCES MANAGEMENT COUNCIL. COPIES OF EACH OF THESE PERMITS ARE INCLUDED IN THE CS PAGES OF THE CONTRACT DOCUMENTS. ALL COSTS ASSOCIATED WITH THESE CONDITIONS SHALL BE CONSIDERED INCIDENTAL TO THE CONSTRUCTION AND INCLUDED WITH THE COST FOR THE ASSOCIATED BID ITEM.
20. ALL REINFORCED CONCRETE PIPE TO BE CLASS III UNLESS NOTED OTHERWISE.
21. DISPOSITION OF EXISTING LIGHTS IS SHOWN ON THE SITE PREPARATION PLANS UNLESS OTHERWISE NOTED.

ADDENDUM NO. 4

CDR MAGUIRE

RHODE ISLAND
DEPARTMENT OF TRANSPORTATION

INTERSTATE 195

DESIGNED BY:
CHECKED:
DATE:
SHEET: V1_047
OF: V1_260

SCALE: NONE

REVISIONS			REVISIONS		
NO.	DATE	BY	NO.	DATE	BY
1	12/4/12	JC III			

PROVIDENCE — IMPROVEMENTS TO INTERSTATE ROUTE 195 CONTRACT 14 VOLUME 1 — RHODE ISLAND

DRAINAGE & UTILITY NOTES, LEGEND AND PLAN SYMBOLS NO. 1

R-1

FED ROAD DIV. NO.	STATE	FEDERAL AID PROJECT NO.	FISCAL YEAR	SHEET NO.	TOTAL SHEETS
1	R.I.	BRO-1954(075) 405-421-633(SEWER) 405-421-634(WATER)		V1_048	V1_260

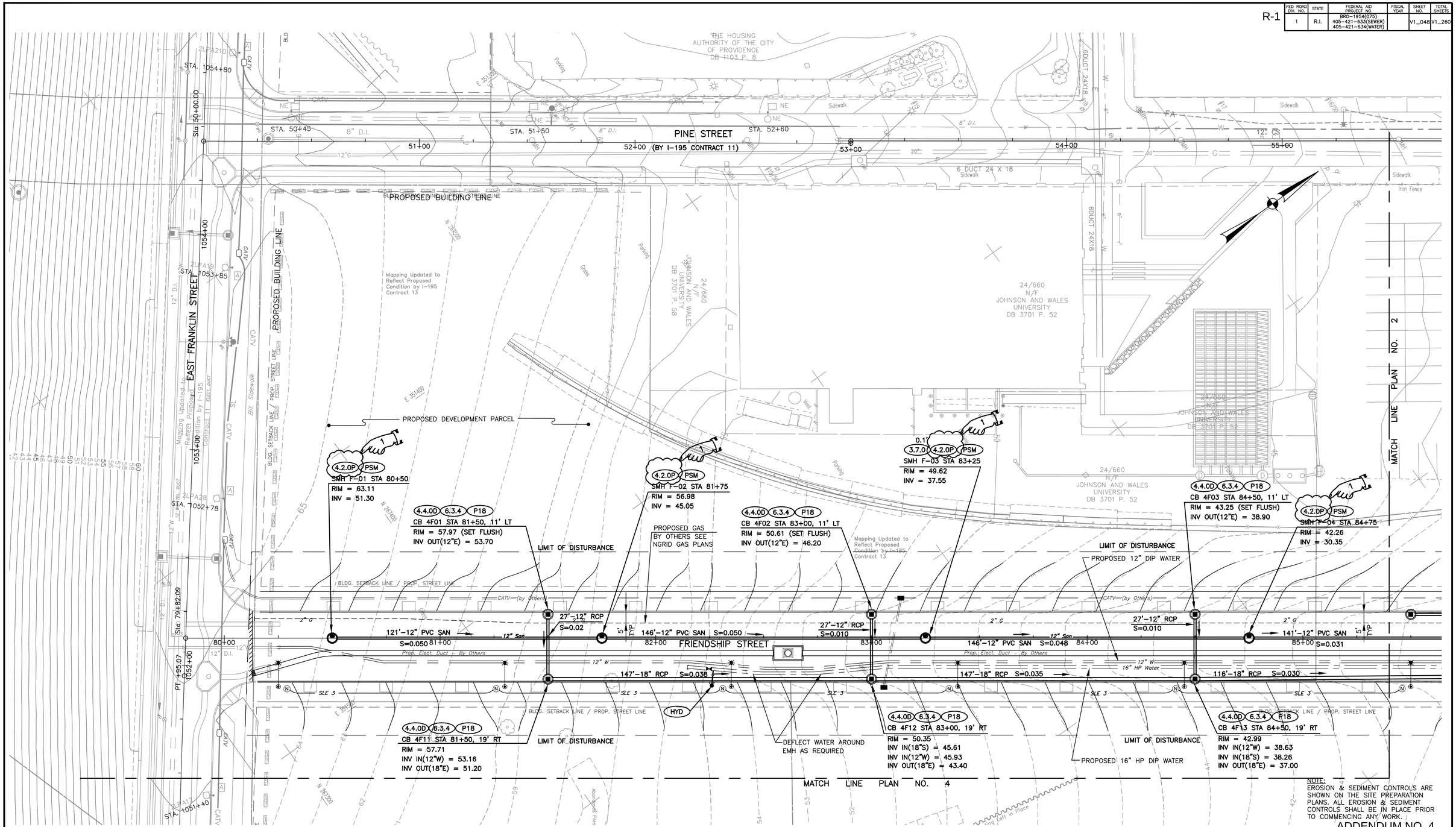

NOTE:
EROSION & SEDIMENT CONTROLS ARE SHOWN ON THE SITE PREPARATION PLANS. ALL EROSION & SEDIMENT CONTROLS SHALL BE IN PLACE PRIOR TO COMMENCING ANY WORK.

ADDENDUM NO. 4

CDR | MAGUIRE

RHODE ISLAND
DEPARTMENT OF TRANSPORTATION

INTERSTATE 195

DESIGNED BY:
CHECKED:
DATE:
SHEET: V1_048
OF: V1_260

SCALE: 1"=20'
0 10' 20' 40'

REVISIONS			REVISIONS		
NO.	DATE	BY	NO.	DATE	BY
1	12/4/12	JC III			

PROVIDENCE

IMPROVEMENTS TO
INTERSTATE ROUTE 195
CONTRACT 14 VOLUME 1

RHODE ISLAND

DRAINAGE & UTILITY
PLAN NO. 1

V:\I-195Hwy\Contrct14\Plans\Advertising Archive C14\0010W_V1_048_DRAINUTL001.dwg, 11/30/2012 2:19:22 PM

0010W_V1_048_DRAINUTL001

R-2

FED. ROAD DIV. NO.	STATE	FEDERAL AID PROJECT NO.	FISCAL YEAR	SHEET NO.	TOTAL SHEETS
1	R.I.	BRO-1954(075) 405-421-633(SEWER) 405-421-634(WATER)		V1_049	V1_260

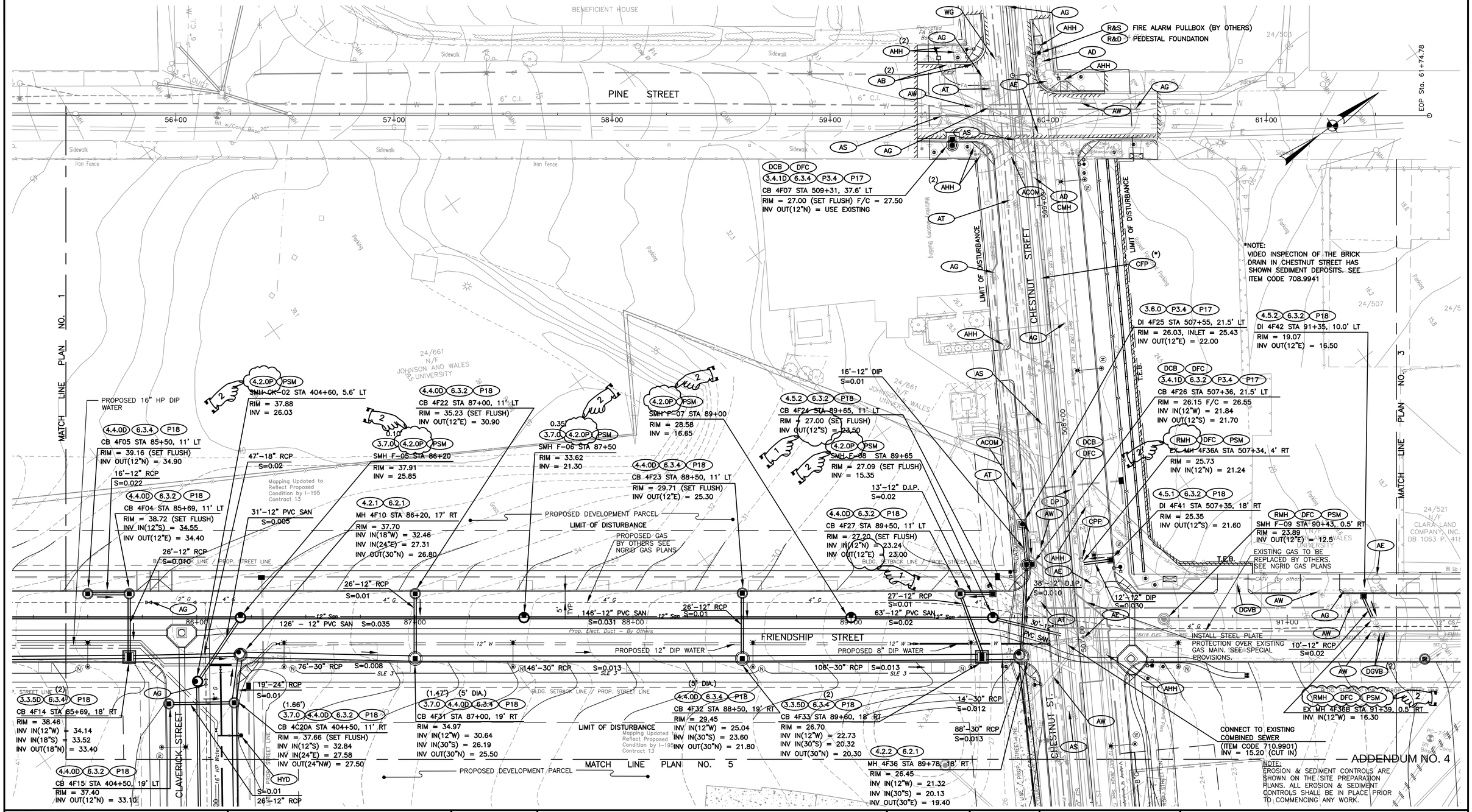

CDR | MAGUIRE

RHODE ISLAND
DEPARTMENT OF TRANSPORTATION

INTERSTATE 195

DESIGNED BY:
CHECKED:
DATE:
SHEET: V1_049
OF: V1_260

SCALE: 1"=20'
0 10' 20' 40'

REVISIONS			REVISIONS		
NO.	DATE	BY	NO.	DATE	BY
1	11/29/12	JC III			
2	12/4/12	JC III			

PROVIDENCE

IMPROVEMENTS TO
INTERSTATE ROUTE 195
CONTRACT 14 VOLUME 1

RHODE ISLAND

DRAINAGE & UTILITY
PLAN NO. 2

V:\I-195Hwy\Contrct14\Plans\Advertising Archive C14\0010W_V1_049_DRAINUTL002_ADD04.dwg, 12/3/2012 1:20:05 PM

0010W_V1_049_DRAINUTL002_ADD04

R-1

FED ROAD DIV. NO.	STATE	FEDERAL AID PROJECT NO.	FISCAL YEAR	SHEET NO.	TOTAL SHEETS
1	R.I.	BRO-1954(075) 405-421-633(SEWER) 405-421-634(WATER)		V1_051	V1_260

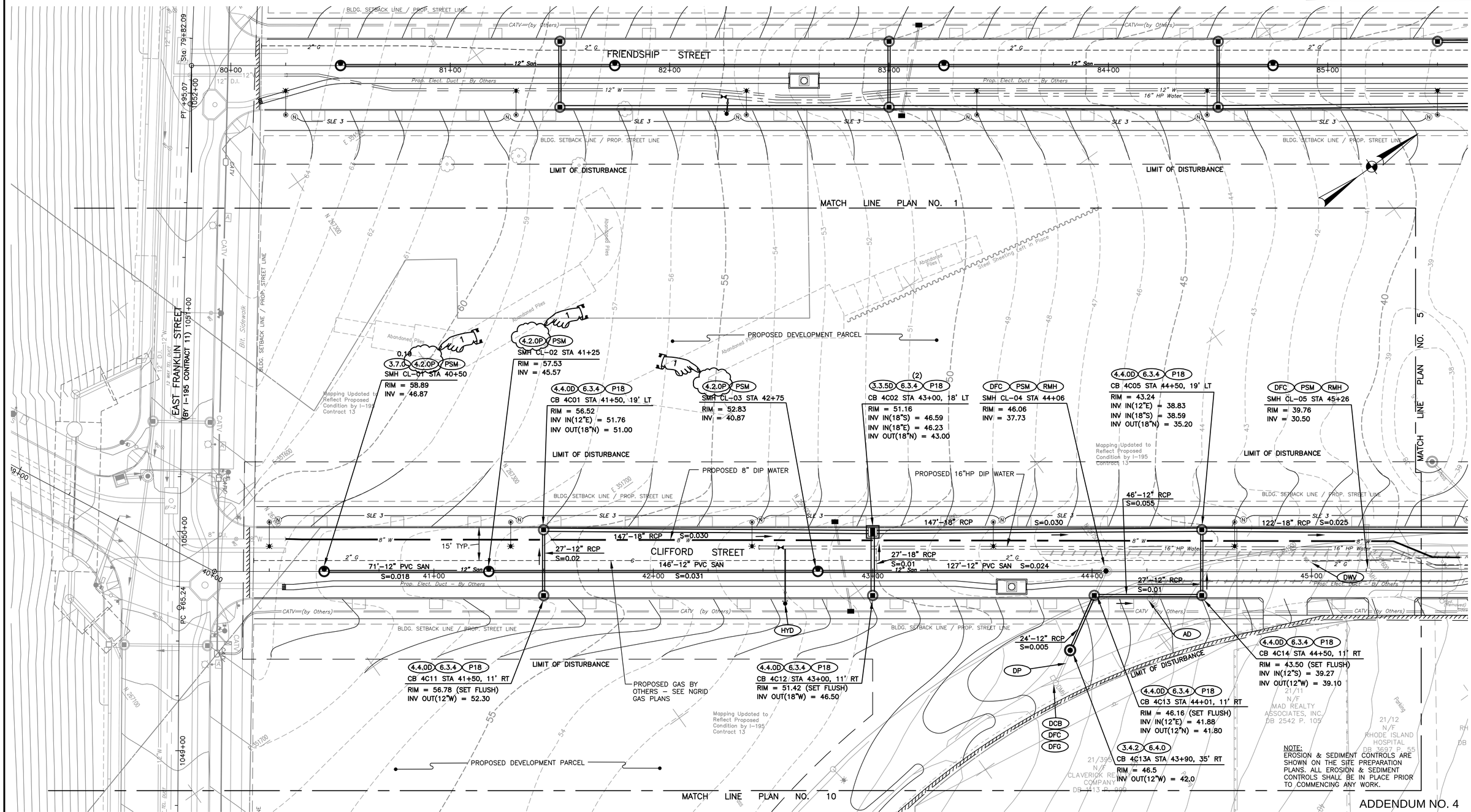

ADDENDUM NO. 4

CDR MAGUIRE

RHODE ISLAND DEPARTMENT OF TRANSPORTATION

INTERSTATE 195

DESIGNED BY:
CHECKED:
DATE:
SHEET: V1_051
OF: V1_260

SCALE: 1"=20'
0 10' 20' 40'

REVISIONS			REVISIONS		
NO.	DATE	BY	NO.	DATE	BY
1	12/4/12	JC III			

PROVIDENCE — IMPROVEMENTS TO INTERSTATE ROUTE 195 CONTRACT 14 VOLUME 1 — RHODE ISLAND

DRAINAGE & UTILITY PLAN NO. 4

V:\I-195Hwy\Contrct14\Plans\Advertising Archive C14\0010W_V1_051_DRAINUTL004_ADD04.dwg, 11/30/2012 2:47:07 PM

0010W_V1_051_DRAINUTL004_ADD04

NOTES:

1. SEE CHESTNUT STREET GAS RELOCATION PLAN FOR CONTRACT GAS WORK.
2. SEE CHESTNUT STREET CATV RELOCATION PLAN FOR CONTRACT CATV WORK.
3. SEE CHESTNUT STREET DRAINAGE CROSSING PLAN & SECTION FOR ADDITIONAL UTILITY WORK.

NOTE:
EROSION & SEDIMENT CONTROLS ARE SHOWN ON THE SITE PREPARATION PLANS. ALL EROSION & SEDIMENT CONTROLS SHALL BE IN PLACE PRIOR TO COMMENCING ANY WORK.

ADDENDUM NO. 4

CDR MAGUIRE

RHODE ISLAND
DEPARTMENT OF TRANSPORTATION

INTERSTATE 195

DESIGNED BY:
CHECKED:
DATE:
SHEET: V1_052
OF: V1_260

SCALE: 1"=20'

REVISIONS			REVISIONS		
NO.	DATE	BY	NO.	DATE	BY
1	12/4/12	JC III			

PROVIDENCE — IMPROVEMENTS TO INTERSTATE ROUTE 195 CONTRACT 14 VOLUME 1 — RHODE ISLAND

DRAINAGE & UTILITY PLAN NO. 5

R-1

FED ROAD DIV. NO.	STATE	FEDERAL AID PROJECT NO.	FISCAL YEAR	SHEET NO.	TOTAL SHEETS
1	R.I.	BRO-1954(075) 405-421-633(SEWER) 405-421-634(WATER)		V1_053	V1_260

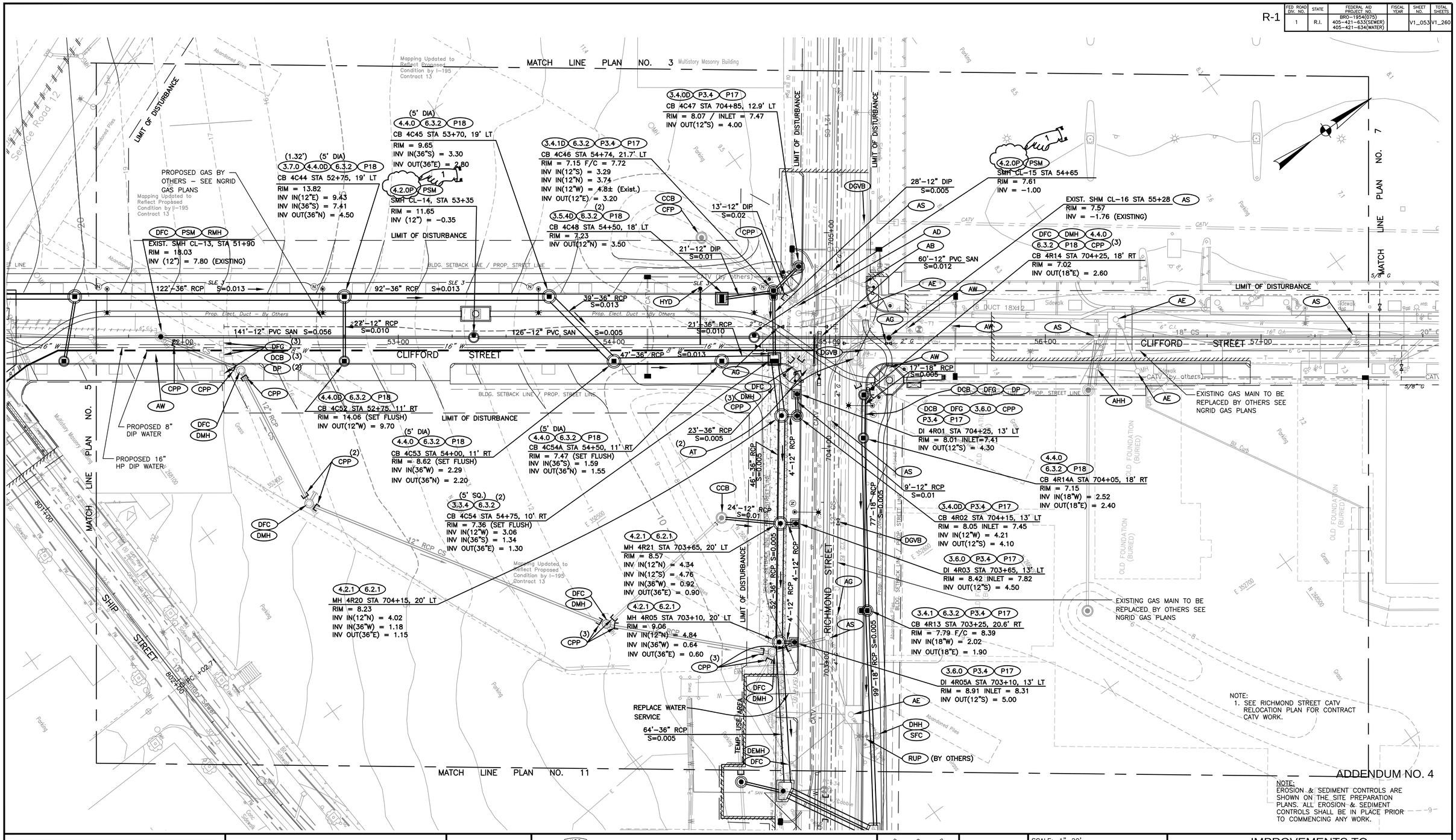

ADDENDUM NO. 4

NOTE:
EROSION & SEDIMENT CONTROLS ARE SHOWN ON THE SITE PREPARATION PLANS. ALL EROSION & SEDIMENT CONTROLS SHALL BE IN PLACE PRIOR TO COMMENCING ANY WORK.

CDR MAGUIRE

RHODE ISLAND
DEPARTMENT OF TRANSPORTATION

INTERSTATE 195

DESIGNED BY:
CHECKED:
DATE:
SHEET: V1_053
OF: V1_260

SCALE: 1"=20'
0 10' 20' 40'

REVISIONS			REVISIONS		
NO.	DATE	BY	NO.	DATE	BY
1	12/4/12	JC III			

PROVIDENCE — IMPROVEMENTS TO INTERSTATE ROUTE 195 CONTRACT 14 VOLUME 1 — RHODE ISLAND

DRAINAGE & UTILITY PLAN NO. 6

V:\I-195Hwy\Contrct14\Plans\Advertising Archive C14\0010W_V1_053_DRAINUTL006_ADD04.dwg, 11/30/2012 3:01:59 PM

0010W_V1_053_DRAINUTL006_ADD04

R-1

FED ROAD DIV. NO.	STATE	FEDERAL AID PROJECT NO.	FISCAL YEAR	SHEET NO.	TOTAL SHEETS
1	R.I.	BRO-1954(075) 405-421-633(SEWER) 405-421-634(WATER)		V1_058	V1_260

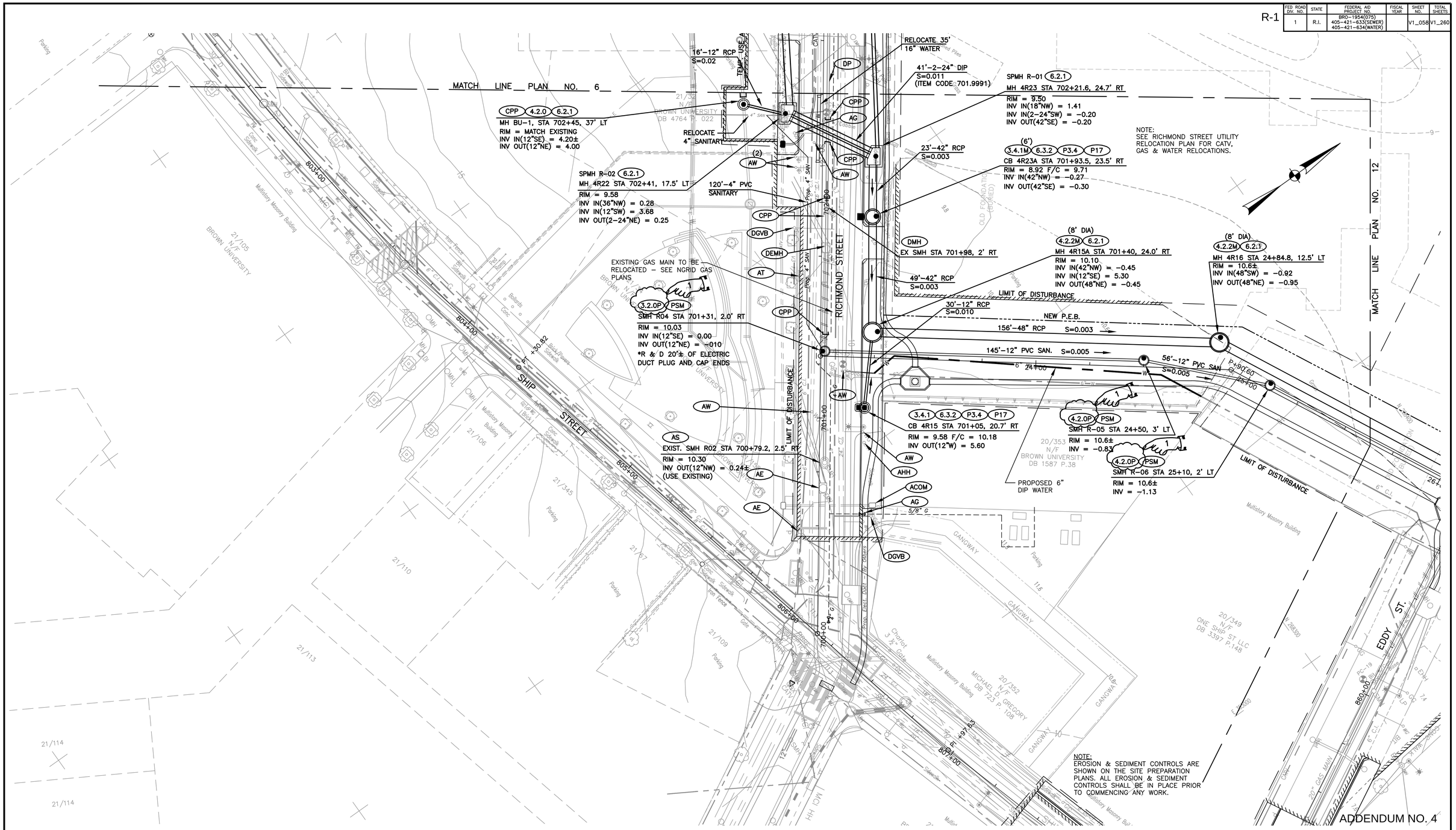

CDR | MAGUIRE

RHODE ISLAND
DEPARTMENT OF TRANSPORTATION

INTERSTATE 195

DESIGNED BY:
CHECKED:
DATE:
SHEET: V1_058
OF: V1_260

SCALE: 1"=20'
0 10' 20' 40'

REVISIONS			REVISIONS		
NO.	DATE	BY	NO.	DATE	BY
1	12/4/12	JC III			

PROVIDENCE

IMPROVEMENTS TO
INTERSTATE ROUTE 195
CONTRACT 14 VOLUME 1

RHODE ISLAND

DRAINAGE & UTILITY
PLAN NO. 11

V:\I-195Hwy\Contrct14\Plans\Advertising Archive C14\0010W_V1_058_DRAINUTL011_ADD04.dwg, 11/30/2012 3:10:02 PM

0010W_V1_058_DRAINUTL011_ADD04

R-1

FED ROAD DIV. NO.	STATE	FEDERAL AID PROJECT NO.	FISCAL YEAR	SHEET NO.	TOTAL SHEETS
1	R.I.	BRO-1954(075) 405-421-633(SEWER) 405-421-634(WATER)		V1_059	V1_260

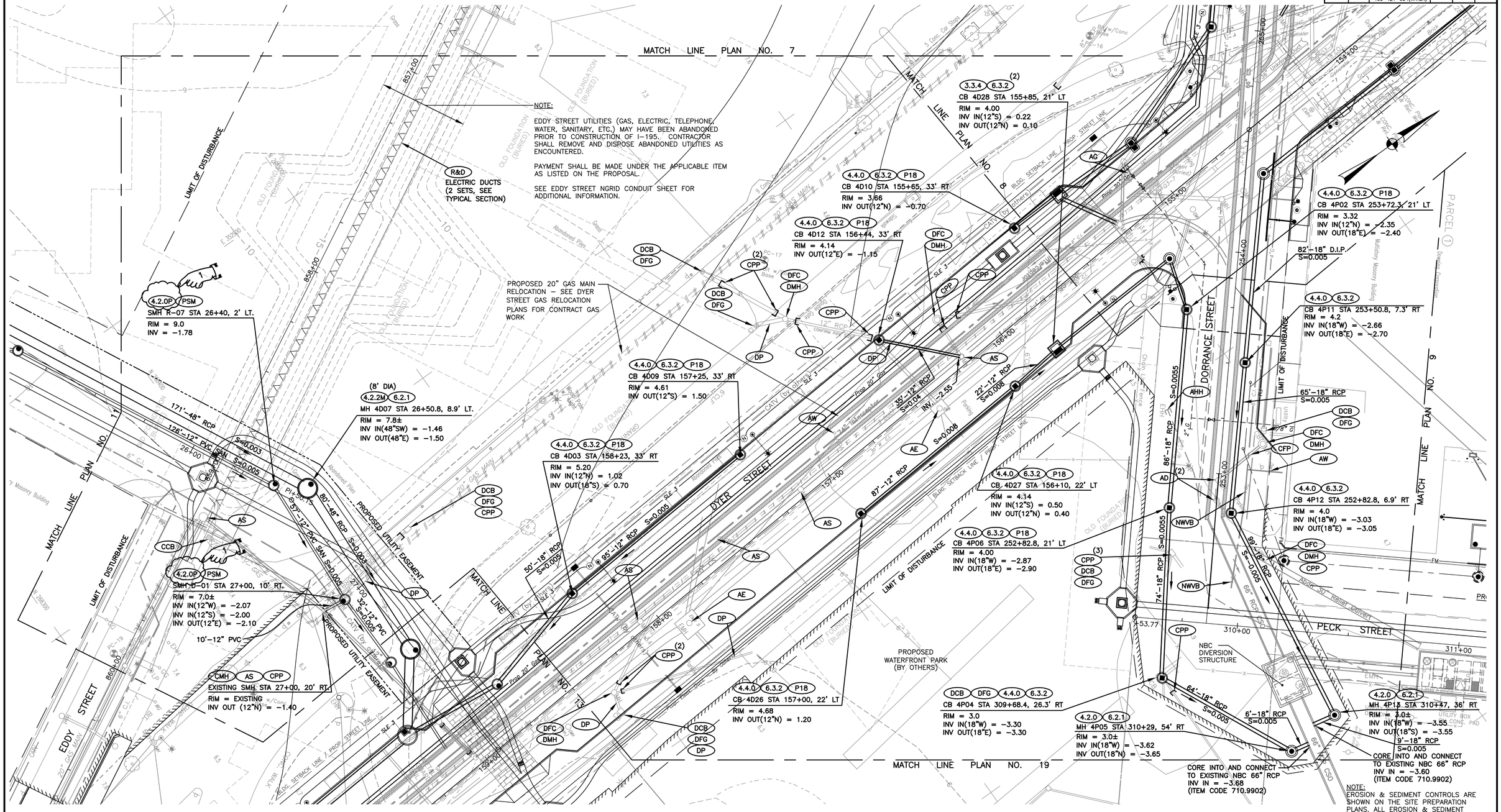

ADDENDUM NO. 4

CDR MAGUIRE

RHODE ISLAND DEPARTMENT OF TRANSPORTATION

INTERSTATE 195

DESIGNED BY:
CHECKED:
DATE:
SHEET: V1_059
OF: V1_260

SCALE: 1"=20'
0 10' 20' 40'

REVISIONS			REVISIONS		
NO.	DATE	BY	NO.	DATE	BY
1	12/4/12	JC III			

IMPROVEMENTS TO INTERSTATE ROUTE 195
PROVIDENCE — CONTRACT 14 VOLUME 1 — RHODE ISLAND

DRAINAGE & UTILITY PLAN NO. 12

V:\I-195Hwy\Contrct14\Plans\Advertising Archive C14\0010W_V1_059_DRAINUTL012_ADD04.dwg, 11/30/2012 3:17:00 PM

0010W_V1_059_DRAINUTL012_ADD04

FED ROAD DIV. NO.	STATE	FEDERAL AID PROJECT NO.	FISCAL YEAR	SHEET NO.	TOTAL SHEETS
1	R.I.	BRO-1954(075) 405-421-633(SEWER) 405-421-634(WATER)		V1_060	V1_260

NOTES
1. SEE DYER STREET GAS RELOCATION PLANS FOR CONTRACT GAS WORK
2. SEE DYER STREET DRAINAGE CROSSING PLANS AND SECTIONS FOR ADDITIONAL UTILITY WORK

DFC 6.3.2 P18 RCBW
CB S04 STA 808+37, 9' LT.
RIM = 7.44 (SET FLUSH)
INV OUT = EXISTING

P3.4 P17 RCBW
DI S05 STA 808+40, 12' RT
RIM = 8.12 INLET = 7.70
INV OUT = EXISTING

(4 FL)
6.3.0 DFC RCB
CB S07 STA 808+54, 21' RT
RIM = 8.10
INV IN (W) = EXISTING
INV OUT (E) = EXISTING

4.5.1 6.3.2 P18
DI S06 STA 808+70, 9' RT
RIM = 7.50, (SET FLUSH)
INV OUT (W) = 4.50

3.2.0 6.2.1
MH 4D07A STA 161+75, 43.5' RT
RIM = 8.02
CONNECT TO EXISTING PIPE
INV = 1.80±
INV IN (12"E) = 4.56
INV OUT (12"N) = 1.80±

4.5.1 6.3.2 P18
DI 4E08 STA 808+47.7, 21.3' LT
RIM = 7.33
INV OUT(12"E) = 4.30

SPMH S-02 6.2.1
MH 4S02 STA 10+00
RIM = 7.82
INV IN(12"W) = 1.21
INV IN(48"N) = -2.43
INV OUT(2-30"E) = -2.50

4.2.0 6.2.1
MH 4S08 STA 808+84, 24.7' LT
RIM = 7.85
INV IN(12"W) = 4.13
INV OUT(12"E) = 1.50

RELOCATE 16" HP WATER (SEE DETAILS)

(0.91')
3.7.0 4.2.0 PSM
SMH D04 STA 160+75, 23' RT
RIM = 7.01
INV IN(18"S) = -5.89
INV OUT(18"E) = -5.90
8'-18" PVC CONNECT TO 74" CS

AB CCB
CB 4E16 STA 860+31, 13.7' LT
RIM = 7.43
INV OUT(12"W) = 2.56 (EXIST.)

(8' DIA)
4.4.0M 6.3.2 P18
CB 4D01 STA 159+20, 31' RT
RIM = 6.04
INV IN (18"N) = 0.19
INV IN (48"N) = -1.85
INV OUT(48"S) = -1.90

4.2.0P PSM
SMH D02 STA 159+08, 61' RT
RIM = 6.48
INV IN(12"W) = -2.26
INV OUT(12"N) -4.25

(8' DIA)
4.2.2M 6.2.1
MH 4D06 STA 27+36, 1.5' RT
RIM = 6.50
INV IN(48"W) = -1.74
INV OUT(48"S) = -1.75

4.5.1 6.3.2 P18
CB 4D23A STA 161+75, 34.5' RT
RIM = 7.26
INV OUT (12") = 4.80

(1.21')
3.7.0 4.2.0P PSM
SMH D03 STA 161+06, 23.9' RT
RIM = 7.46
INV IN(18"S) = -5.75
INV OUT(18"N) = -5.75

16" HP WATER BYPASS (SEE DETAILS)

CPP 3.4.1 6.3.2
P3.4 P17
CB 4D21 STA 161+35, 18.2' LT
RIM = 8.02, GRATE = 7.50 (SET FLUSH)
INV OUT(12"N) = 3.00

6.2.1 DFC RMH
MH 4S03 STA 161+10, 18.5' LT
RIM = 7.88
INV IN(12"S) = 2.78
INV IN(30"W) = -0.10 (EXISTING)
INV OUT(30"E) = -0.20

SPMH S-01 6.2.1
MH 4S01 STA 9+29
RIM = 8.2
INV IN(12"N) = -0.94
INV IN(30"W) = -0.33 SHIP ST.
INV IN(2-30"W) = -3.40
INV OUT(60"E) = -3.50

4.4.0 6.3.2 P18
CB 4D22 STA 160+55, 22' LT
RIM = 6.79
INV IN(12"N) = 0.84
INV OUT(12"S) = -0.10

3.3.1 6.1.1 6.3.2
CB 4D22A STA 159+21, 18' LT
RIM = 6.17 / GRATE = 6.01
INV OUT(12"S) = 1.50

4.2.0 6.2.1
MH 4D15 STA 158+75, 23' RT
RIM = 5.84
INV IN(18"N) = 0.45
INV OUT(18"S) = 0.40

NOTE:
EROSION & SEDIMENT CONTROLS ARE SHOWN ON THE SITE PREPARATION PLANS. ALL EROSION & SEDIMENT CONTROLS SHALL BE IN PLACE PRIOR TO COMMENCING ANY WORK.

ADDENDUM NO. 4

CDR MAGUIRE

RHODE ISLAND
DEPARTMENT OF TRANSPORTATION

INTERSTATE 195

DESIGNED BY:
CHECKED:
DATE:
SHEET: V1_060
OF: V1_260

SCALE: 1"=20'
0 10' 20' 40'

REVISIONS			REVISIONS		
NO.	DATE	BY	NO.	DATE	BY
1	11/29/12	JC III			
2	12/4/12	JC III			

PROVIDENCE

IMPROVEMENTS TO
INTERSTATE ROUTE 195
CONTRACT 14 VOLUME 1

RHODE ISLAND

DRAINAGE & UTILITY
PLAN NO. 13

R-1	FED. ROAD DIV. NO.	STATE	FEDERAL AID PROJECT NO.	FISCAL YEAR	SHEET NO.	TOTAL SHEETS
	1	R.I.	BRO-1954(075) 405-421-633(SEWER) 405-421-634(WATER)		V1_078	V1_260

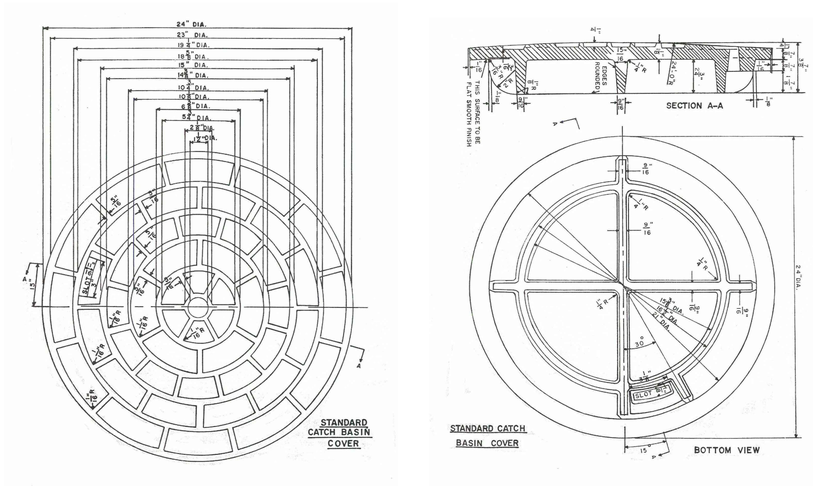

STANDARD CATCH BASIN COVER P-4

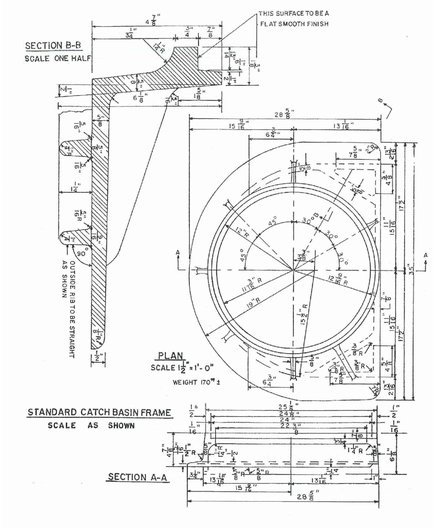

STANDARD CATCH BASIN FRAME P-3

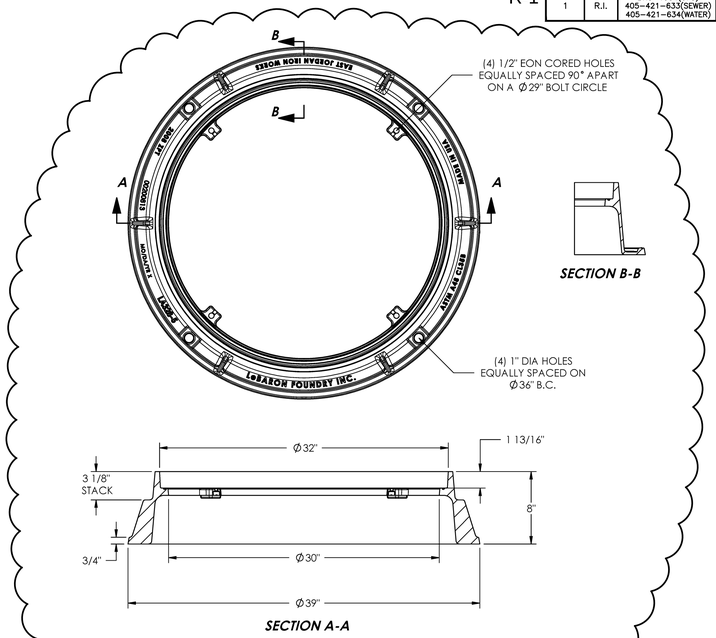

PROVIDENCE STD. SEWER MH FRAME

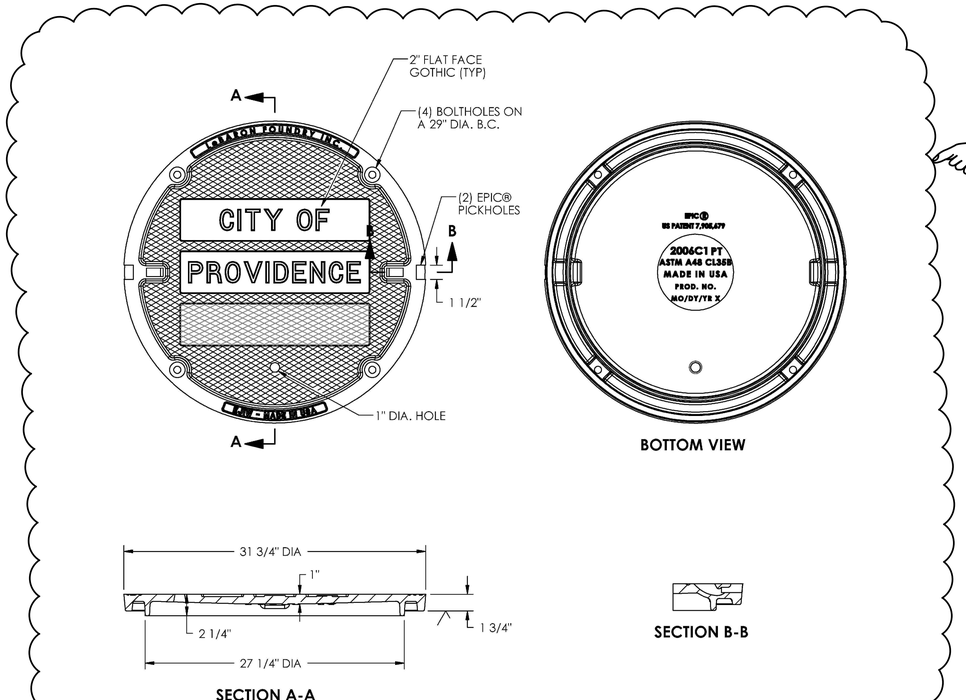

PROVIDENCE STD. SEWER MH COVER

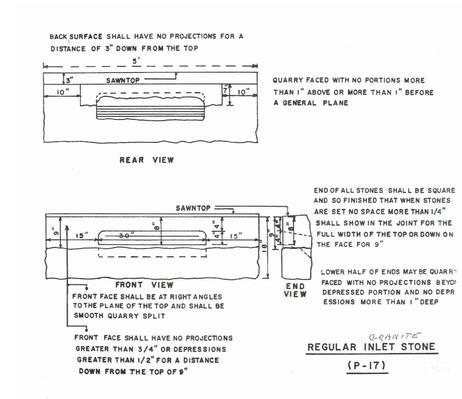

GRANITE INLET STONE P-17

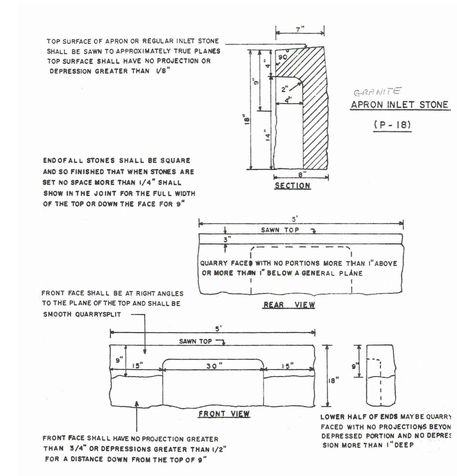

GRANITE INLET STONE P-18

ADDENDUM NO. 4

CDR MAGUIRE

RHODE ISLAND
DEPARTMENT OF TRANSPORTATION

INTERSTATE 195

DESIGNED BY:
CHECKED:
DATE:
SHEET: V1_078
OF: V1_260

SCALE: NONE

REVISIONS			REVISIONS		
NO.	DATE	BY	NO.	DATE	BY
1	12/4/12	JC III			

IMPROVEMENTS TO
INTERSTATE ROUTE 195
CONTRACT 14 VOLUME 1

PROVIDENCE RHODE ISLAND

DRAINAGE DETAILS NO. 9
PROVIDENCE STANDARD

D9

V:\I-195Hwy\Contrct14\Plans\Advertising Archive C14\0010W_V1_078_DRAINDET009.dwg, 11/30/2012 1:26:16 PM

0010W_V1_078_DRAINDET009

FED ROAD DIV. NO.	STATE	FEDERAL AID PROJECT NO.	FISCAL YEAR	SHEET NO.	TOTAL SHEETS
1	R.I.	BRO-1954(075) 405-421-633(SEWER) 405-421-634(WATER)		V1_151	V1_260

GENERAL NOTES

1. WORK FOR THIS PROJECT SHALL BE IN ACCORDANCE WITH THE RHODE ISLAND DEPARTMENT OF TRANSPORTATION STANDARD SPECIFICATIONS FOR ROAD AND BRIDGE CONSTRUCTION, 2004 EDITION, AND THE RHODE ISLAND STANDARD DETAILS, 1998 EDITION, WITH ALL REVISIONS.

2. THE CONTRACTOR SHALL STORE ALL EQUIPMENT AND STOCKPILED MATERIAL A MINIMUM DISTANCE OF 30 FEET FROM THE OUTSIDE EDGE OF THE TRAVEL LANE SO AS NOT TO CREATE A SAFETY HAZARD. STORAGE AREAS REQUIRE APPROVAL BY THE ENGINEER.

3. ANY DAMAGE TO EXISTING STATE PROPERTY CAUSED BY THE CONTRACTOR SHALL BE REPAIRED BY THE CONTRACTOR AT NO ADDITIONAL COST TO THE STATE.

4. ALL DISTURBED AREAS INCLUDING THE CONTRACTOR'S STOCKPILE AREAS WITHIN THE ROW SHALL BE RESTORED WITH PLANTABLE SOIL AND SEED. THE LIMITS OF SURFACE DISTURBANCE MUST BE STRICTLY ADHERED TO IN ALL AREAS. THE CONTRACTOR WILL BE RESPONSIBLE FOR PROVIDING AND PLACING, AT HIS OWN EXPENSE, PLANTABLE SOIL AND SEED IN AND RESTORING AREAS WHICH ARE OUTSIDE OF THE CONTRACT 14 AREAS OF DISTURBANCE AND WHICH ARE IMPACTED BY CONSTRUCTION OPERATIONS INCLUDING THOSE AREAS WHERE VEHICLES, EQUIPMENT AND MATERIALS ARE STORED WITH THE PERMISSION OF THE ENGINEER.

5. ERECTION OF NEW SIGNS SHALL BE SEQUENCED WITH THE LOCATION OF EXISTING SIGNS THAT REMAIN IN SERVICE DURING CONSTRUCTION. THE VISIBILITY OF EXISTING SIGNS SHALL NOT BE COMPROMISED.

6. SIGN MOUNTINGS:

a. DIRECTIONAL, ~~REGULATORY AND WARNING SIGNS SHALL~~ BE MOUNTED IN ACCORDANCE WITH RI STD. 24.2.0 UNLESS SHOWN OTHERWISE.
b. CONSTRUCTION ~~SIGNS SHALL BE MOUNTED IN ACCORDANCE WITH STD. 24.3.0.~~
c. GUIDE SIGNS SHALL BE MOUNTED IN ACCORDANCE WITH STD. 24.2.0 UNLESS SHOWN OTHERWISE.
d. PARKING SIGNS SHALL BE MOUNTED PER STD. 24.6.0 UNLESS SHOWN OTHERWISE.
e. WHEN SHOWN, SIGNS MAY BE MOUNTED TO STREET LIGHT POLES OR TRAFFIC SIGNAL POLES UTILIZING A MINIMUM OF TWO (2) ¾"x0.20 STAINLESS STEEL STRAPS. ALL COSTS ASSOCIATED WITH MOUNTINGS SHALL BE INCLUDED WITH THE COST OF THE SIGN.

SIGN MOUNTED ON STREET LIGHT OR TRAFFIC SIGNAL POLE DETAIL
NOT TO SCALE

SIGNING & PAVEMENT MARKINGS LEGEND

- BDM — BICYCLE DETECTOR PAVEMENT MARKING
- BS — BICYCLE SYMBOL AND ARROW PAVEMENT MARKING
- BSA — BIKE SYMBOL WITH ARROW
- CW — 24-INCH, WHITE, EPOXY RESIN PAVEMENT MARKINGS CROSS WALKS-SEE DETAILS
- IA — IMPACT ATTENUATOR
- RPM — REMOVE EXISTING PAVEMENT MARKINGS
- SABM — SHOCK ABSORBING BARRIER MODULES
- SHM — PAVEMENT MARKINGS FOR SPEED TABLES OR SPEED HUMPS WITH CROSSWALKS
- SLM — SHARED LANE MARKING
- 4DY — 4-INCH, DOUBLE YELLOW, EPOXY RESIN PAVEMENT MARKINGS
- 4Y — 4-INCH, YELLOW, EPOXY RESIN PAVEMENT MARKINGS
- 6W — 6-INCH, WHITE, EPOXY RESIN PAVEMENT MARKINGS
- 6WD — 6-INCH, WHITE, EPOXY RESIN PAVEMENT MARKINGS (DOTTED)
- 6WPS — 6-INCH, WHITE, EPOXY RESIN PAVEMENT MARKINGS (PARKING SPACE LINES)
- 6WS — 6-INCH, WHITE, EPOXY RESIN PAVEMENT MARKINGS (SKIP STRIPES)
- 6Y — 6-INCH, YELLOW, EPOXY RESIN PAVEMENT MARKINGS (DOTTED)
- 6YD — 8-INCH, WHITE, EPOXY RESIN PAVEMENT MARKINGS
- 8W — 8-INCH, WHITE, EPOXY RESIN PAVEMENT MARKINGS
- 12W — 12-INCH, WHITE, EPOXY RESIN PAVEMENT MARKINGS
- 24W — 2 (TWO) 12-INCH, WHITE, EPOXY RESIN PAVEMENT MARKINGS
- 20.1.0 — PAVEMENT MARKINGS ARROW AND ONLY
- 20.2.0 — BI-DIRECTIONAL CONTROL DEVICE
- 20.3.0 — YIELD LINE
- 24.1.0 — SIGN POST SELECTION AND INSTALLATION DETAILS, SQUARE POST (SIGNS UP TO 8'-0" Wx4'-0"H)
- 24.2.0 — SIGN POST SELECTION AND INSTALLATION DETAILS, U-CHANNEL POST (SIGNS UP TO 8'-0" Wx4'-0"H)
- 24.3.0 — CONSTRUCTION AND TEMPORARY SIGN MOUNTINGS (SIGNS UP TO 60 SQ. FT.)
- 24.4.0 — CANTILEVER BREAKAWAY SIGN SUPPORT FOR 4'-0" TO 5'-0" SIDEWALKS
- 24.6.0 — PARKING SIGN MOUNTING DETAIL
- 24.6.1 — STREET SIGN MOUNTING DETAIL
- 24.6.2 — MILE MARKER MOUNTING DETAIL
- 25.1.0 — TEMPORARY CONSTRUCTION SIGN COVER DETAIL
- 26.2.0P — DRUM BARRICADE - LEFT IN PLACE
- 26.3.0P — PVC PLASTIC PIPE TYPE III BARRICADE - LEFT IN PLACE
- 40.5.0P — PRECAST MEDIAN BARRIER FOR TEMPORARY TRAFFIC CONTROL - LEFT IN PLACE

STREET SIGN LEGEND

SS-1 - CLAVERICK ST.
SS-2 - FRIENDSHIP ST.
SS-3 - HOSPITAL ST.
SS-4 - CHESTNUT ST.
SS-5 - PARSONAGE ST.
SS-6 - POINT ST.
SS-7 - EDDY ST.
SS-8 - CLIFFORD ST.
SS-9 - DORRANCE ST.
SS-10 - DYER ST.
SS-12 - ORANGE ST.
SS-15 - BASSETT ST.
SS-16 - HOPPIN ST.
SS-17 - SHIP ST.
SS-18 - RICHMOND ST.
SS-19 - SOUTH ST.
SS-20 - ELM ST.

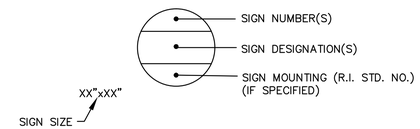

TYPICAL SIGN DESIGNATION

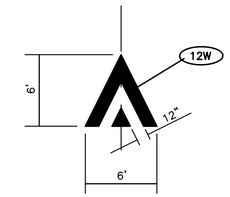

SHM DETAIL

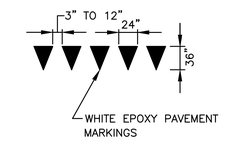

NOTES:
1.) YIELD LINE PATTERN DETAIL SHALL EXTEND ACROSS ENTIRE TRAVEL LANE AT THE LOCATIONS INDICATED ON THE PLANS.
2.) YIELD LINES SHALL CONFORM TO THE MANUAL ON UNIFORM TRAFFIC CONTROL DEVICES LATEST EDITION.

YIELD LINE DETAIL
(ITEM CODE T20.9901)

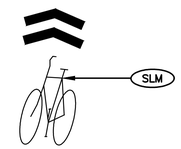

SLM DETAIL
SHARED LANE MARKING

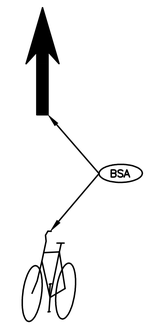

BSA DETAIL
BICYCLE SYMBOL WITH ARROW

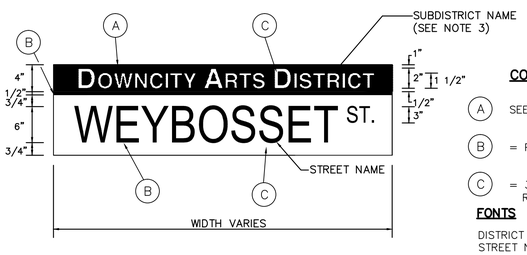

COLOR SCHEME

- A — SEE SPECIAL PROVISION
- B — = PMS BLACK
- C — = 3M SCOTCHLITE DIAMOND GRADE REFLECTIVE SHEETING, #980-10, WHITE

FONTS

DISTRICT NAME= CG TRIUMVIRATE BOLD (75%)
STREET NAME= ARIAL NARROW

NOTES:
1. STREET NAME SIGNS TO BE INSTALLED AT LOCATIONS SHOWN ON THE PLANS.
2. SEE PLANS FOR STREET NAME LEGENDS.
3. SUBDISTRICT SHOWN IS FOR ILLUSTRATION PURPOSES ONLY. SEE SPECIAL PROVISIONS FOR SUBDISTRICT NAMES.
4. STREET NAME SIGNS SHALL BE SUPPORTED BY A BRACKET ON THE BOTTOM OF THE SIGN WITH A MINIMUM LENGTH OF 3/4 OF THE LENGTH OF THE SIGN PANEL.

STREET NAME SIGN DETAIL
NOT TO SCALE

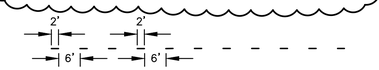

DOTTED PAVEMENT MARKINGS

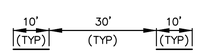

SKIP STRIPING

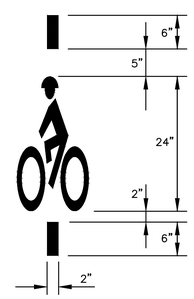

BDM DETAIL
BICYCLE DETECTOR PAVEMENT MARKING

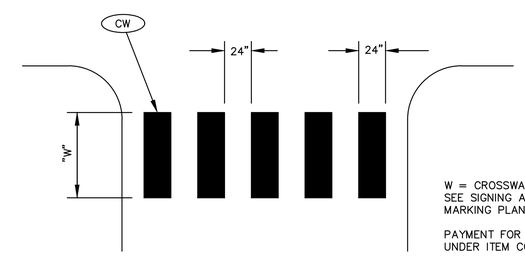

W = CROSSWALK WIDTH. SEE SIGNING AND PAVEMENT MARKING PLANS.

PAYMENT FOR 24W SHALL BE MADE UNDER ITEM CODE T20.2112

CW SHALL BE MADE BY MAKING 2 PASSES OF 12" EPOXY RESIN PAVEMENT MARKINGS.

CROSSWALK DETAIL
24" LONGITUDINAL LINES
NOT TO SCALE

ADDENDUM NO. 4

CDR MAGUIRE

RHODE ISLAND DEPARTMENT OF TRANSPORTATION

INTERSTATE 195

DESIGNED BY:
CHECKED:
DATE:
SHEET: V1_151
OF: V1_260

SCALE: NOT TO SCALE

REVISIONS			REVISIONS		
NO.	DATE	BY	NO.	DATE	BY
1	11/20/12	JC III			
2	12/4/12	JC III			

PROVIDENCE — IMPROVEMENTS TO INTERSTATE ROUTE 195 CONTRACT 14 VOLUME 1 — RHODE ISLAND

SIGNING & PAVEMENT MARKING NOTES, & DETAILS

R-1

FED ROAD DIV. NO.	STATE	FEDERAL AID PROJECT NO.	FISCAL YEAR	SHEET NO.	TOTAL SHEETS
1	R.I.	BRO-1954(075) 405-421-633(SEWER) 405-421-634(WATER)		V1_152	V1_260

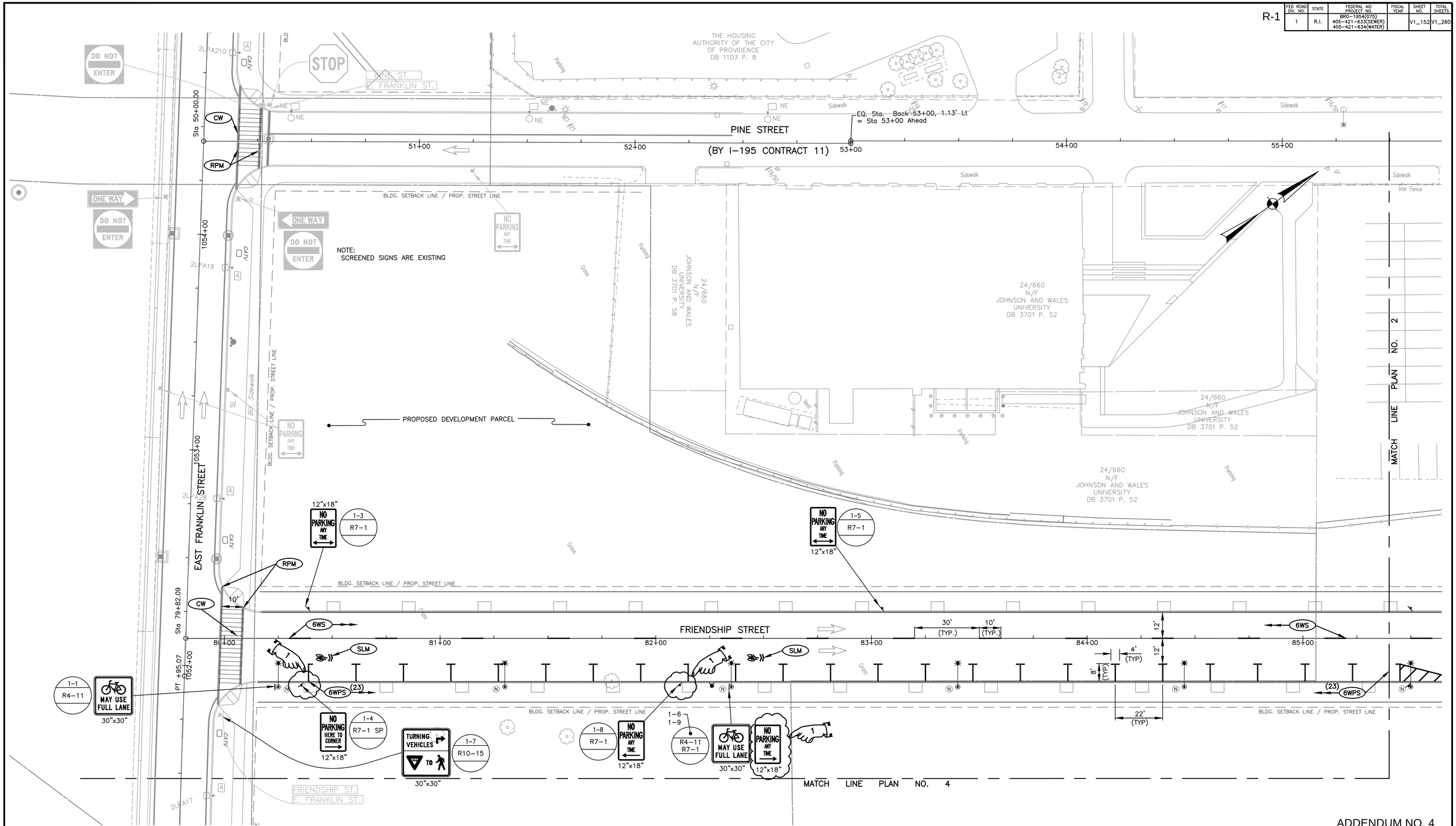

ADDENDUM NO. 4

CDR MAGUIRE

RHODE ISLAND DEPARTMENT OF TRANSPORTATION

INTERSTATE 195

DESIGNED BY:
CHECKED:
DATE:
SHEET: V1_152
OF: V1_260

SCALE: 1"=20'
0 10' 20' 40'

REVISIONS			REVISIONS		
NO.	DATE	BY	NO.	DATE	BY
1	12/4/12	JC III			

PROVIDENCE

IMPROVEMENTS TO INTERSTATE ROUTE 195
CONTRACT 14 VOLUME 1

RHODE ISLAND

SIGNING & PAVEMENT MARKING PLAN NO. 1

V:\I-195Hwy\Contrct14\Plans\Advertising Archive C14\0010W_V1_152_SIGNSTPE001_ADD04.dwg, 12/3/2012 10:03:16 AM

0010W_V1_152_SIGNSTPE001_ADD04

R-1

FED ROAD DIV. NO.	STATE	FEDERAL AID PROJECT NO.	FISCAL YEAR	SHEET NO.	TOTAL SHEETS
1	R.I.	BRO-1954(075) 405-421-633(SEWER) 405-421-634(WATER)		V1_156	V1_260

ADDENDUM NO. 4

CDR MAGUIRE

RHODE ISLAND
DEPARTMENT OF TRANSPORTATION

INTERSTATE 195

DESIGNED BY:
CHECKED:
DATE:
SHEET: V1_156
OF: V1_260

SCALE: 1"=20'

REVISIONS				REVISIONS		
NO.	DATE	BY	NO.	DATE	BY
1	12/4/12	JC III			

PROVIDENCE — IMPROVEMENTS TO INTERSTATE ROUTE 195 CONTRACT 14 VOLUME 1 — RHODE ISLAND

SIGNING & PAVEMENT MARKING PLAN NO. 5

V:\I-195Hwy\Contrct14\Plans\Advertising Archive C14\0010W_V1_156_SIGNSTPE005_ADD04.dwg, 12/3/2012 8:32:22 AM

0010W_V1_156_SIGNSTPE005_ADD04

R-1

FED ROAD DIV. NO.	STATE	FEDERAL AID PROJECT NO.	FISCAL YEAR	SHEET NO.	TOTAL SHEETS
1	R.I.	BRO-1954(075) 405-421-633(SEWER) 405-421-634(WATER)		V1_158	V1_260

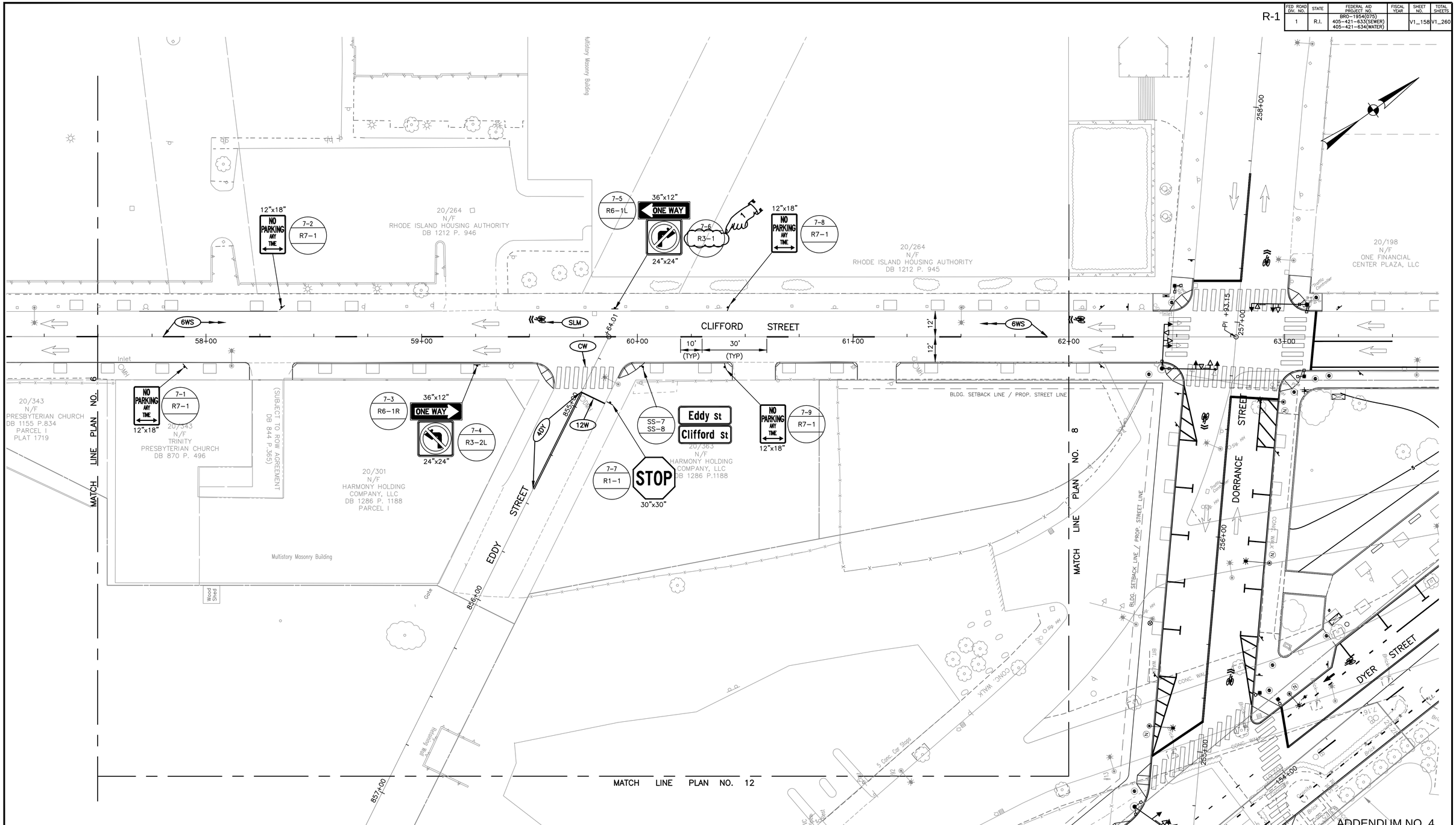

CDR MAGUIRE

RHODE ISLAND
DEPARTMENT OF TRANSPORTATION

INTERSTATE 195

DESIGNED BY:
CHECKED:
DATE:
SHEET: V1_158
OF: V1_260

SCALE: 1"=20'
0 10' 20' 40'

REVISIONS			REVISIONS		
NO.	DATE	BY	NO.	DATE	BY
1	12/4/12	JC III			

IMPROVEMENTS TO
INTERSTATE ROUTE 195
CONTRACT 14 VOLUME 1

PROVIDENCE RHODE ISLAND

SIGNING & PAVEMENT MARKING
PLAN NO. 7

V:\I-195Hwy\Contrct14\Plans\Advertising Archive C14\0010W_V1_158_SIGNSTPE007_ADD04.dwg, 12/3/2012 8:38:13 AM

0010W_V1_158_SIGNSTPE007_ADD04

R-1

FED ROAD DIV. NO.	STATE	FEDERAL AID PROJECT NO.	FISCAL YEAR	SHEET NO.	TOTAL SHEETS
1	R.I.	BRO-1954(075) 405-421-633(SEWER) 405-421-634(WATER)		V1_159	V1_260

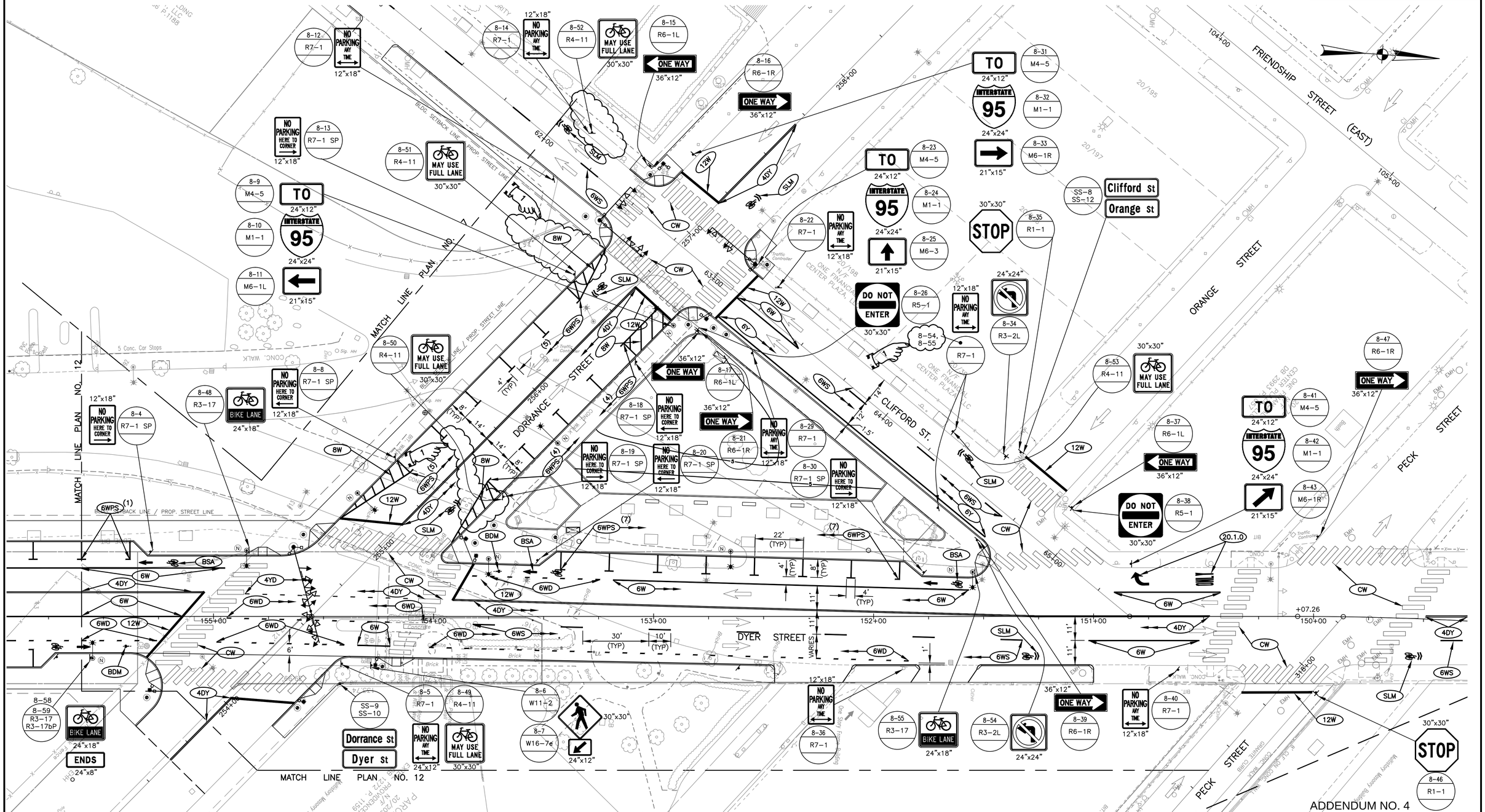

CDR | MAGUIRE

RHODE ISLAND
DEPARTMENT OF TRANSPORTATION

INTERSTATE 195

DESIGNED BY:
CHECKED:
DATE:
SHEET: V1_159
OF: V1_260

SCALE: 1"=20'
0 10' 20' 40'

REVISIONS			REVISIONS		
NO.	DATE	BY	NO.	DATE	BY
1	12/4/12	JC III			

IMPROVEMENTS TO
INTERSTATE ROUTE 195
CONTRACT 14 VOLUME 1

PROVIDENCE RHODE ISLAND

SIGNING & PAVEMENT MARKING
PLAN NO. 8

V:\I-195Hwy\Contrct14\Plans\Advertising Archive C14\0010W_V1_159_SIGNSTPE008_ADD04.dwg, 12/3/2012 10:26:10 AM

0010W_V1_159_SIGNSTPE008_ADD04

FED. ROAD DIV. NO.	STATE	FEDERAL AID PROJECT NO.	FISCAL YEAR	SHEET NO.	TOTAL SHEETS
1	R.I.	BRO-1954(075) 405-421-633(SEWER) 405-421-634(WATER)		V1_165	V1_260

R-1

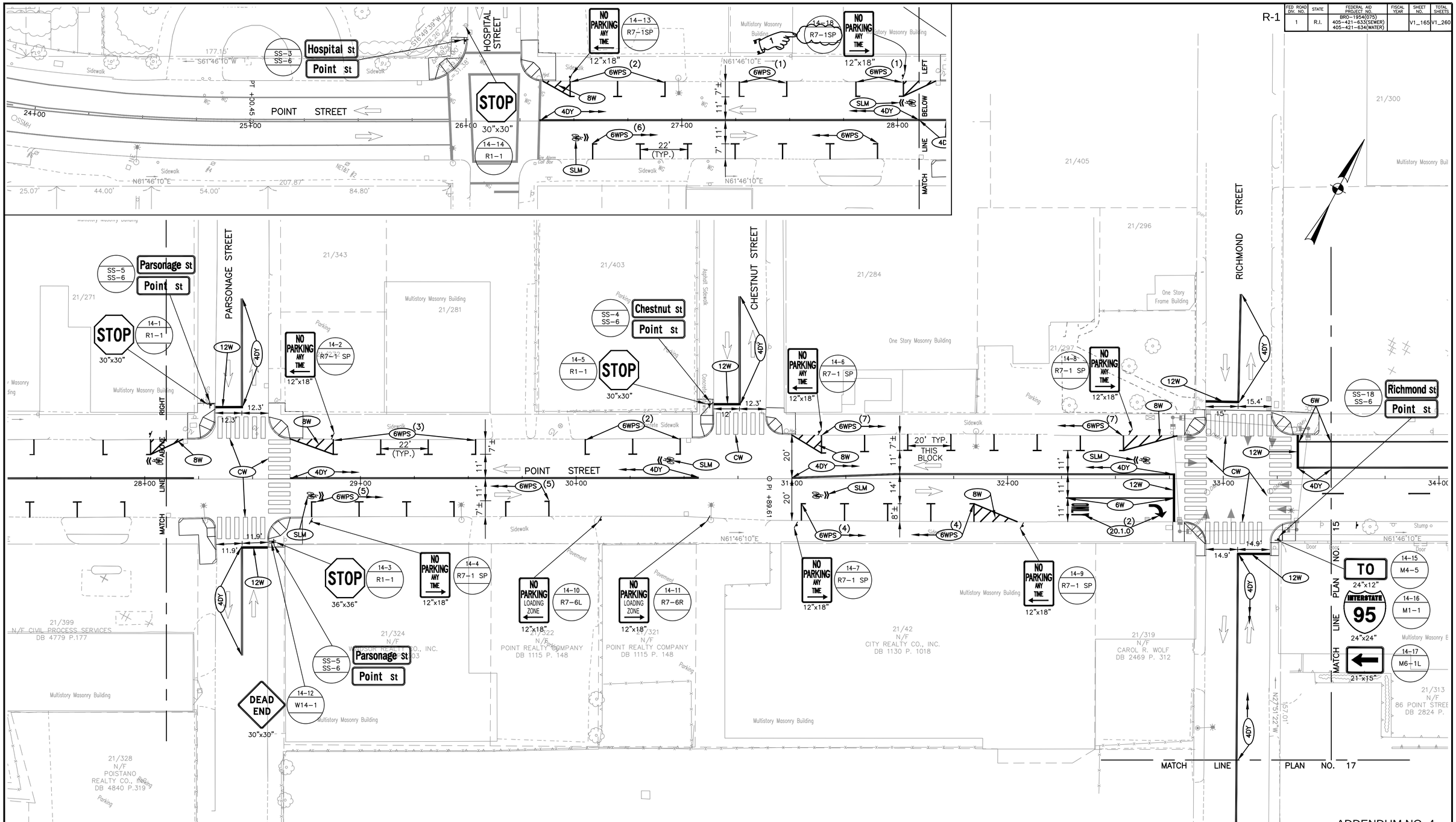

ADDENDUM NO. 4

CDR | MAGUIRE

RHODE ISLAND
DEPARTMENT OF TRANSPORTATION

INTERSTATE 195

DESIGNED BY:
CHECKED:
DATE:
SHEET: V1_165
OF: V1_260

SCALE: 1"=20'
0 10' 20' 40'

REVISIONS			REVISIONS		
NO.	DATE	BY	NO.	DATE	BY
1	12/4/12	JC III			

PROVIDENCE — IMPROVEMENTS TO INTERSTATE ROUTE 195 CONTRACT 14 VOLUME 1 — RHODE ISLAND

SIGNING & PAVEMENT MARKING
PLAN NO. 14

V:\I-195Hwy\Contrct14\Plans\Advertising Archive C14\0010W_V1_165_SIGNSTPE014_ADD04.dwg, 12/3/2012 8:55:12 AM

0010W_V1_165_SIGNSTPE014_ADD04