State of Rhode Island
Department of Administration / Division of Purchases
One Capitol Hill, Providence, Rhode Island 02908-5855
Tel: (401) 574-8100 Fax: (401) 574-8387

September 17, 2012

ADDENDUM # 1

RFQ #7458013
Title: Installation of Acid Waste Treatment System - RIC

Bid Opening Date & Time:

9/25/12 @ 2:00 PM (EDT)

Notice to Vendors: (see attached)

Pre-Bid Clarification, Addendum to Plans & Specifications, Exception Notes, Drawing and Pre-Bid Attendance Sheet

Gary P. Mosca
Buyer

Interested parties should monitor this website, on a regular basis, for any additional information that may be posted.

STATE OF RHODE ISLAND AND PROVIDENCE PLANTATIONS

Department of Administration
DIVISION OF PURCHASES
One Capitol Hill
Providence, RI 02908-5855

Tel: (401) 574-8100
Fax: (401) 574-8387
Website: www.purchasing.ri.gov

Pre-Bid Clarifications

BID No. 7458013 – Pre-Bid
Clarke Science - Acid Waste Treatment System RFQ

When: Wednesday, September 12, 2012 9:00 AM-10:00 AM
Where: Physical Plant - Capital Projects

- Bids are due on September 25, 2012 by 2:00pm and shall be delivered to State Purchasing, One Capitol Hill, Providence, RI.
- Be sure to include the $20,000 Allowance into the base bid.

1. Contractor shall provide flow switch. Contact Mike Palumbo, Siemens Representative . Comply with Note 16 on the PLANS.

2. Siemens panel shall be capable of accepting two (2) in-puts (flow-switch and pH value) and providing three (3) out-puts (controller, plus two mixers).

3. Contractor shall provide venting for each unit, (2) in total, 4" acid venting.

4. With respect to the use of polypropylene pipe inside the tank, refer to the Addendum and its accompanying PLAN.

5. Steve Scales, Maltz Sales Company shall provide the weight of the tank for inclusion in the Addendum. (see attached) Note: Each tank weighs 90 lbs empty.

6. Contractor shall include a future capability for pH recording in the pH controller unit.

RHODE ISLAND COLLEGE

INSTALLATION OF ACID-WASTE TREATMENT SYSTEM,
CLARKE-SCIENCE BUILDING

ADDENDUM TO PLANS AND SPECIFICATIONS

The PLANS and Specifications for this proposed contract (Bid #7458013, for which Bids are currently scheduled to open on 25 September) are revised as follows:

1. Note 8 on the PLANS: ADDITIONAL Piping Requirements and ADDITIONAL Mechanical Room Requirements is **REVISED** to **DELETE** all requirements for a 2" Diameter (D) ventilation piping system; and to **ADD** the requirements for **TWO 4" D Polypropylene Ventilation Piping Systems** (ONE from Each 400-Gallon Tank). This work is adequately described in Notes 41, 42 and 43 on the attached PLAN: ADDENDUM ONE Requirements. **This PLAN is included as part of this ADDENDUM.**

2. The requirements for piping connections on the 400-gallon high-density polyethylene (HDPE) tanks are **CLARIFIED** in Note 41 on the attached PLAN: ADDENDUM ONE Requirements.

3. The PLANS are **REVISED** to **ADD** a sample-drawing capability to the acid-waste treatment system; comply with Note 44 on the attached PLAN: ADDENDUM ONE Requirements.

4. The PLANS are **REVISED** to **ADD** the requirement for the contractor (and NOT Maltz Sales Company) to furnish and install the 4" D polypropylene inlet pipe to its desired location in the initial 400-gallon HDPE neutralization and dilution tank; comply with
Note 45 on the attached PLAN: ADDENDUM ONE Requirements.

5. Note 37 on the PLANS is **REVISED** to **ADD** the requirement for the contractor to furnish and install a total of FIVE 2-Conductor (plus Ground) Electric Cables between the existing Siemens controls panel and this acid-waste treatment system. The Siemens system must be capable of accepting Two Inputs (Flow Switch and pH Value) and providing Three Outputs (to operate the pH Controller and Each of the Two Mixers).

xxxxxxxxxxxxxxxxxxxxxxxx END OF ADDENDUM xxxxxxxxxxxxxxxxxxxxxxx

STATE OF RHODE ISLAND AND PROVIDENCE PLANTATIONS

Department of Administration
DIVISION OF PURCHASES
One Capitol Hill
Providence, RI 02908-5855

Tel: (401) 574-8100
Fax: (401) 574-8387
Website: www.purchasing.ri.gov

September 17, 2012

Tank(s) Information:

HDLPE, 400 gallon Vertical Storage Tank
#1740000N 45" Diameter x 62" Height*
18" Manway
Sulfuric Acid rated resin
Wrapped for shipping
Weight per tank (empty) approximately 90 lbs. not including fittings
* The diameter of this tank will not allow for a 4" side wall connections,
2" is the maximum.
Modifications to HDLPE Tank by Maltz Sales / JP Plastics, Foxboro, MA
Modification quantities are divided between the two tanks
1ea Custom HDLPE Mixer Mount brackets to allow for mounting of specified mixers
1ea 2" PVC, Schedule 80, Submersion Mounting pipes for pH Electrodes
1ea 2" Diameter PE Couplings
2ea 1" Diameter PE Injection fittings (2) per Tank mounted on the top dome of the tank to accept the injection check valves from the Sulfuric Acid and Sodium Hydroxide Pumps
2ea 2" Diameter PE Flanges with Fabricated PE Gussetts, no gaskets supplied.*
*Requires flexible connection, not supplied
2ea 2" PVC Welded Half Couplings for drain
1ea 2" HDLPE Flanges for vent connection, by others.*
*Requires flexible connection, not supplied
Manway will be open to allow for mixers

End Document

STATE OF RHODE ISLAND AND PROVIDENCE PLANTATIONS

Department of Administration
DIVISION OF PURCHASES
One Capitol Hill
Providence, RI 02908-5855

Tel: (401) 574-8100
Fax: (401) 574-8387
Website: www.purchasing.ri.gov

September 14, 2012

Exception NOTES

4. (Continued) - EXCEPTION - 4" D Fitting and Pipe by others.
16. ADDENDUM - Tank Manufacturer's Specifications; Piping between the two tanks require allowance for 4% dimensional (axial, angular, & lateral) movement as outlined in Manufacturer's Guidelines for Use and Installation. On (2) Two 45" diameter tanks, 4% equals to 0.9 inches on each tank x 2 = 1.8" of axial movement between tanks. Consideration should be made for use of a partial flexible connection to accommodate this movement.
22. EXCEPTION -
A.) Drain welded half couplings should be 2", not 3/4"?
I.) Both Tanks should have drain fittings?
B.) Cannot Weld Polypro to HDLPE. All tank fittings that are welded must be HDLPE.
C.) 2" Diameter "U" Vent Polypro Pipe? Contractors to plumb through roof?
D.) 4" Diameter Polypro Internal pipe installed and supported by others, Flanges provided by others.
23. A.) by others
24. A.) F&I Bolts, Nuts, and Viton gaskets by others.
25.) EXCEPTION - Added a Single 4-20mA Output from the pH Controller for future use.

35. EXCEPTION due to minimal height of fitting tank cannot be totally drained

RHODE ISLAND COLLEGE | Installation of Acid-Waste Treatment System, Clarke-Science Building

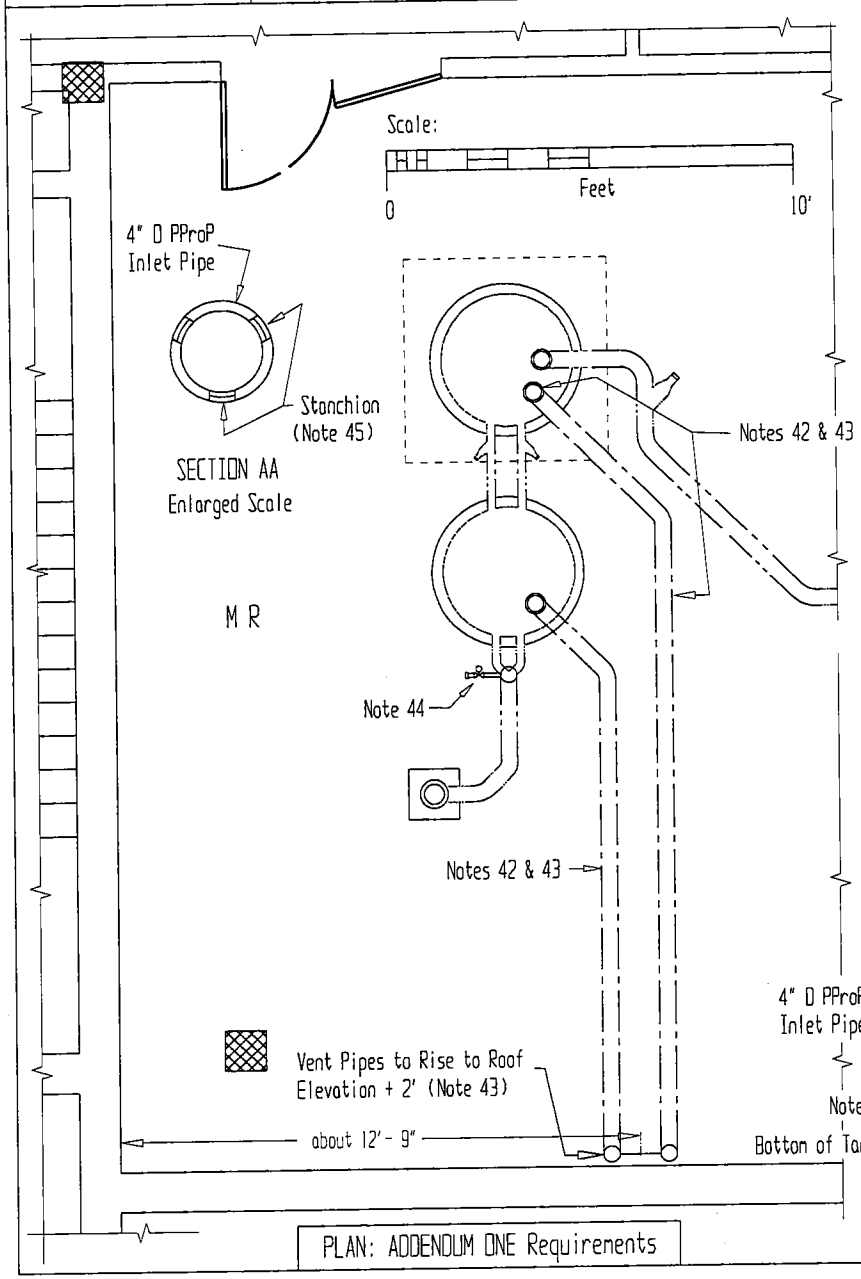

PLAN: ADDENDUM ONE Requirements

Notes:

41. GENERAL: All Piping Connections F&I by the Supplier on the 400-Gallon High-Density Polyethylene (HDPE) Tanks will be HDPE Flanges of the D Specified. Contractor will F&I Viton Gaskets between these Flanges & the Polypropylene (PProP) Flanges on the Acid-Waste or Ventilation Pipe being Connected to the Tank.

42. GENERAL: F&I All Required: Pipe Fittings, Unions, Galv.S. PIPE HANGER LOOPS, MATERIALS, & Fasteners; 3/8" D Galvanized.Steel Threaded Rods (Using Only 3/8" D in the M R), Nuts, Washers; plus Roller-Type Hanger-Saddles due to Contraction & Expansion. Since the M R has a Concrete Ceiling, Drill the Required Holes and F&I the Required Hilti or Rawl "Drop-Ins" in order to Anchor the Tops of the Threaded Rods: Attached to which Contractor is to F&I the Suspended Pipe Hangers with Rollers (as Specified in Note 4). Reminder: All Ventilation Piping is be Supported by Angle Steel per Note 4.

43. All Requirements for a 2" D Ventilation System (Note 8) are Cancelled; Note 8 is Deleted. Instead, F&I TWO 4" D Ventilation Systems, EACH to RISE to the MR Ceiling from a Flange Atop One of the Two Tanks (Each Tank must be Separately Vented). Supported by Ceiling-Fastened Hangers, F&I EACH Ventilation Pipe SouthEast & thence South to the Locations Identified on this PLAN & just below the Ceiling. Core-Drill TWO 4-1/2" or 5" D Holes through the Floor of Room 116 at Locations about 6'- 0" & 7'- 4" East of the West Wall & 3" to 6" North of Its South Wall. To Ensure the Integrity of the Floors & Roof, Keep 12" Minimum Clearance between Holes. F&I 2 Vertical Pipes to Rise from the MR Ceiling to Locations above the Room 116 Suspended Ceiling. (RIC will Remove Any Required Asbestos Floor Tiles at NO COST to this Piping Contractor.) Above the Ceiling, F&I Each Vent Pipe about 3'- 6" North; Remove Any Existing Ductwork that Interferes (Ducts are NO LONGER REQUIRED).
Core-Drill Two 4-1/2" or 5" D Holes through the Floor of Room 210 at Locations about 15'- 1" & 16'- 5" East of the West Wall & 3" to 6" North of Its South Wall. F&I the Pipes to Rise from Below the Floor to Above the Ceiling of Room 210. Elbow Each Pipe about 2"- 0" North to Rise through Holes Core-Drilled in the Roof about 2' North of Its South Edge. Use One of 3 College-Approved Roofing Contractors to Drill the Holes & F&I the TWO 20-Ounce Lead-Coated Copper Pitch Pans (6"x 6" x Sufficient Height to Exceed the Elevation of the Adjacent Roof by 6"). Pitch Pans are to have 3" Wide Flanges around Their Bottoms; Their Pop-Rivets, Nuts, Bolts, Fasteners are to be Completely Sealed on the Outsides of the Pitch Pans; & then Sealed beneath Flashings. All Space between the Metal Sides of Each Pitch Pan & the Enclosed Pipe shall be Filled with Insulation & Covered by at least 2" of Elastomeric Sealant up to Levels 1" Higher than the Tops of the Pitch Pans, & Sloped to Preclude Ponding of Water atop the Pitch Pans. The 4" D Vent Pipes are to Rise about 2'- 0" above the Elevation of the Adjacent Roof Surface.

44. In order to Provide the Capability of Drawing Samples, F&I a 4" D PProP Trap in the 4" D Vertical Acid-Waste Discharge Pipe on the South Side of the 2nd Tank. In the Sidewall of the Trap (about 2" above Its Invert), F&I a 3/4" D Polypro Nipple with a 3/4" D Ball-Type Cut-Off Valve, a Discharge Nipple & a Cap on the End.

45. This is ONE of THREE approximately 3" Wide x 6" High Slots that Extend Down from the Bottom of the 4" D Inlet Pipe in the Initial Tank to the Tank's Bottom. Instead of Including the 4" D PProP Inlet Pipe as part of the Initial 400-Gallon Tank (from Maltz), Contractor is to Extend the 4" D Acid-Waste Drain Pipe (Note 4 on the PLANS) to Drop through the Tank's Top & ExtendDown to Discharge 6" above the Tank's Bottom. F&I the Pipe's Ceiling Hanger System to Maintain the Inlet Pipe's Height above the Tank's Bottom. Also, Cut the Bottom of the Pipe so that Three 1" Wide Stanchions (or Supports), Spaced at 120 Intervals Extend to the Tank's Bottom. Seal the Pipe's Circumference as It Passes through the Top of the Tank.

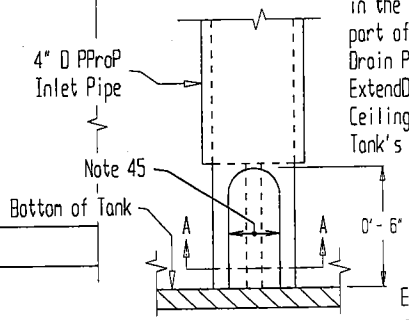

Enlarged Scale

AcidW-Bsnt-Vent 13 September 2012

J Vickers, College Engineer

PRE-BID - #7458013

INSTALLATION OF ACID WASTE TREATMENT SYSTEM - RIC

Company	Representative	Address	Email	Phone
1. Michael Palumbo	Siemens	40 Sharpe Dr. Cranston RI 02920	Michael.palumbo@siemens.com	401-732-4787
2. DELTA MECH	GARY RIANNA	44 WILCLAR ST WARWICK RI	G.RIANNA@DELTAMECHLLC.COM	401-499-7200
3. ADAM PETRONIO	CAM	16 LYDIA ANN RD SMITHFIELD RI	ADAM@CAMHVAC.COM	401-232-7230
4. STEVE SCALES	MALTZ	67 GREEN ST FOXBORO MA	STEVES@MALTZSALES.COM	401-578-2477
5.				
6.				
7.				
8.				
9.				
10.				
11.				
12.				

DATE: 9/12/12