Request for Quote

STATE OF RHODE ISLAND AND PROVIDENCE PLANTATIONS
ONE CAPITOL HILL
PROVIDENCE RI 02908

CREATION DATE : 16-MAY-12
BID NUMBER: 7449739
TITLE: FIXTURES IN BOOKSTORES - CCRI

BLANKET START : 01-JUN-12
BLANKET END : 31-DEC-12
BID CLOSING DATE AND TIME:22-JUN-2012 02:00:00

BUYER: Mosca, Gary
PHONE #: 401-574-8124

BILL TO
CCRI CONTROLLER'S OFFICE
ACCOUNTS PAYABLE
400 EAST AVENUE
WARWICK, RI 02886
US

SHIP TO
CCRI KNIGHT CAMPUS
400 EAST AVE
WARWICK, RI 02886-1807
US

Requistion Number: 1269798

Note to Bidders: Questions concerning this solicitation may be emailed to gary mosca@purchasing ri gov no later than 6/12/12 @ 12:00 NOON (EST) Questions should be submitted in a Microsoft word attachment. Please reference the RFQ # on all correspondence. Questions received if any will be posted on the internet as an addendum to this solicitation It is the responsibility of all interested parties to download this information

Line	Description	Quantity	Unit	Unit Price	Total
1	SUPPLY AND INSTALL FIXTURES IN BOOKSTORES LOCATED AT WARWICK, PROVIDENCE, AND LINCOLN CAMPUS OF CCRI THERE WILL BE A NON MANDATORY PRE-BID CONFERENCE HELD FRIDAY 6/8/12 @ 9:00 AM , STARTING AT WARWICK CAMPUS PLEASE REPORT TO PHYSICAL PLANT DIRECTORS OFFICE LOCATION: CCRI- WARWICK CAMPUS 400 EAST AVE WARWICK RI 02886 PRE-BID WILL CONTINUE TO: LISTON CAMPUS ONE HILTON ST. PROVIDENCE RI 02905 PRE-BID WILL CONTINUE TO: FLANAGAN CAMPUS 1762 LOUISQUISSET PIKE LINCOLN RI 02865 WARWICK NATURAL OAK MELAMINE: C A WORK INFO COUNTER-MODIFY LEDGE TO 2"	1 00	Each		
2	WARWICK C 2 WORK INFO COUNTER	1 00	Each		
3	WARWICK C 3 FORTY FIVE DEGREE CORNER COUNTER	1 00	Each		
4	WARWICK G 3A G 3 SW BACK2/METAL INS TO FIT END FRAME54-42	8 00	Each		
5	WARWICK SW 2 SW TWO WAY ON CASTERS	2 00	Each		
6	WARWICK K 1 LOOK UP KIOSK FRAMES	1 00	Each		

It is the Vendor's responsibility to check and download any and all addenda from the RIVIP This offer may not be considered unless a signed RIVIP generated Bidder Certification Cover Form is attached and the Unit Price column is completed The signed Certification Cover Form must be attached to the front of the offer

Request for Quote

STATE OF RHODE ISLAND AND PROVIDENCE PLANTATIONS
ONE CAPITOL HILL
PROVIDENCE RI 02908

CREATION DATE : 16-MAY-12
BID NUMBER: 7449739
TITLE: FIXTURES IN BOOKSTORES - CCRI

BLANKET START : 01-JUN-12
BLANKET END : 31-DEC-12
BID CLOSING DATE AND TIME:22-JUN-2012 02:00:00

BUYER: Mosca, Gary
PHONE #: 401-574-8124

BILL TO
CCRI CONTROLLER'S OFFICE
ACCOUNTS PAYABLE
400 EAST AVENUE
WARWICK, RI 02886
US

SHIP TO
CCRI KNIGHT CAMPUS
400 EAST AVE
WARWICK, RI 02886-1807
US

Requisition Number: 1269798

Note to Bidders: Questions concerning this solicitation may be emailed to gary.mosca@purchasing ri gov no later than 6/12/12 @ 12:00 NOON (EST) Questions should be submitted in a Microsoft word attachment Please reference the RFQ # on all correspondence Questions received if any, will be posted on the internet as an addendum to this solicitation It is the responsibility of all interested parties to download this information

Line	Description	Quantity	Unit	Unit Price	Total
7	WARWICK SW 1 SW THREE WAY ON CASTERS	1 00	Each		
8	WARWICK T 4 WALL END PANEL 1 TOEKICK NOTCH	5 00	Each		
9	WARWICK T 5 CORNER COLUMN KIT	2 00	Each		
10	WARWICK T 6 WALL END PANEL 1 TOEKICK NOTCH	1 00	Each		
11	WARWICK T 1,5.7,T.7A I SHAPE CORNICE 2/SIGN TRACK, FLIP BOLTS	16 00	Each		
12	WARWICK STEEL FIXTURES: MADIX: SAHARA; G 1 TEXT GONDOLA-HH-6-18" SHELVES-EXTENSIONW/SIGN HOLDER	14 00	Each		
13	WARWICK G.2 TEXT GONDOLA-HH-6-18" SHELVES-EXTENSION W/SIGN HOLDER	3 00	Each		
14	WARWICK G 3 END FRAME-HH-NO SHELVES-SIGN HOLDER	8 00	Each		
15	WARWICK G.3A END FRAME-ZH-2 WRAPAROUND-SIGN HOLDER	6 00	Each		
16	WARWICK G 3B END FRAME-ZH NO SHELVES	2 00	Each		
17	WARWICK T.1 WALL UNIT 2/HZ-4-18"' 1-16" SHELF -CANOPY FLANGE	14 00	Each		
18	WARWICK T 2 WALL UNIT-HH-3-18" SHELVES	3 00	Each		
19	WARWICK T 3 WALL UNIT-HH-3-18" SHELVES	1 00	Each		

It is the Vendor's responsibility to check and download any and all addenda from the RIVIP This offer may not be considered unless a signed RIVIP generated Bidder Certification Cover Form is attached and the Unit Price column is completed. The signed Certification Cover Form must be attached to the front of the offer

Request for Quote

STATE OF RHODE ISLAND AND PROVIDENCE PLANTATIONS
ONE CAPITOL HILL
PROVIDENCE RI 02908

CREATION DATE : 16-MAY-12
BID NUMBER: 7449739
TITLE: FIXTURES IN BOOKSTORES - CCRI

BLANKET START : 01-JUN-12
BLANKET END : 31-DEC-12
BID CLOSING DATE AND TIME:22-JUN-2012 02:00:00

BUYER: Mosca, Gary
PHONE #: 401-574-8124

BILL TO
CCRI CONTROLLER'S OFFICE
ACCOUNTS PAYABLE
400 EAST AVENUE
WARWICK, RI 02886
US

SHIP TO
CCRI KNIGHT CAMPUS
400 EAST AVE
WARWICK, RI 02886-1807
US

Requistion Number: 1269798
Note to Bidders: Questions concerning this solicitation may be emailed to gary mosca@purchasing ri.gov no later than 6/12/12 @ 12:00 NOON (EST) Questions should be submitted in a Microsoft word attachment Please reference the RFQ # on all correspondence. Questions received if any will be posted on the internet as an addendum to this solicitation It is the responsibility of all interested parties to download this information

Line	Description	Quantity	Unit	Unit Price	Total
20	PROVIDENCE NATURAL OAK MELAMINE: A.1 SLATWALL BACK TO FIT MADIX WALL 84-12	1 00	Each		
21	PROVIDENCE A 2 SLATWALL BACK TO FIT MADIX WALL 84-12	2 00	Each		
22	PROVIDENCE A 3 A 5 SLATWALL BACK TO FIT MADIX WALL 90-12	5 00	Each		
23	PROVIDENCE A 4 SLATWALL BACK TO FIT MADIX WALL 90-12	5 00	Each		
24	PROVIDENCE A 6 WALL END PANEL	8 00	Each		
25	PROVIDENCE A.6A WALL END PANEL	2 00	Each		
26	PROVIDENCE C 1 COUNTER W/SW FRONT METAL INSERTS LAMINATE SHELVES WIRE MGT	1 00	Each		
27	PROVIDENCE C 2 COUNTER W/SW FRONT METAL INSERTS LAMINATE SHELVES WIRE MGT+	1 00	Each		
28	PROVIDENCE C.3 WORK INFO COUNTER W/MODIFIED CHECK LEDGE NO DRAWERS	1 00	Each		
29	PROVIDENCE C 4 FORTY DEGREE CORNER COUNTER	1 00	Each		
30	PROVIDENCE S.1 SLATWALL PANEL W/METAL INSERTS-CROSS GROOVE	4 00	Each		
31	PROVIDENCE S 1 SLATWALL TRIM	2 00	Each		
32	PROVIDENCE S 1 SLATWALL TRIM	4 00	Each		

It is the Vendor's responsibility to check and download any and all addenda from the RIVIP This offer may not be considered unless a signed RIVIP generated Bidder Certification Cover Form is attached and the Unit Price column is completed The signed Certification Cover Form must be attached to the front of the offer

Request for Quote

STATE OF RHODE ISLAND AND PROVIDENCE PLANTATIONS
ONE CAPITOL HILL
PROVIDENCE RI 02908

CREATION DATE : 16-MAY-12
BID NUMBER: 7449739
TITLE: FIXTURES IN BOOKSTORES - CCRI

BLANKET START : 01-JUN-12
BLANKET END : 31-DEC-12
BID CLOSING DATE AND TIME:22-JUN-2012 02:00:00

BUYER: Mosca, Gary
PHONE #: 401-574-8124

BILL TO
CCRI CONTROLLER'S OFFICE
ACCOUNTS PAYABLE
400 EAST AVENUE
WARWICK, RI 02886
US

SHIP TO
CCRI KNIGHT CAMPUS
400 EAST AVE
WARWICK, RI 02886-1807
US

Requistion Number: 1269798
Note to Bidders: Questions concerning this solicitation may be emailed to gary mosca@purchasing ri gov no later than 6/12/12 @ 12:00 NOON (EST) Questions should be submitted in a Microsoft word attachment Please reference the RFQ # on all correspondence Questions received if any will be posted on the internet as an addendum to this solicitation It is the responsibility of all interested parties to download this information

Line	Description	Quantity	Unit	Unit Price	Total
33	PROVIDENCE A 8 WALL END PANEL	2 00	Each		
34	PROVIDENCE B 1 SLATWALL PANELS FOR MADIX GONDOLA 54-48	4 00	Each		
35	PROVIDENCE B 2 SLATWALL PANELS FOR MADIX GONDOLA 54-48	4 00	Each		
36	PROVIDENCE S.2 SLATWALL TWO WAY ON CASTERS W/ACCESSORIES	1 00	Each		
37	PROVIDENCE STEEL FIXTURES: A 1 WALL UNIT-ZZ-4-12" SHELVES	1 00	Each		
38	PROVIDENCE A 2 WALL UNIT ZZ-4-12" SHELVES	2 00	Each		
39	PROVIDENCE A 3 WALL UNIT-ZZ-4-12" SHELVES	4 00	Each		
40	PROVIDENCE A 4 WALL UNIT-ZZ-4-12" SHELVES	5 00	Each		
41	PROVIDENCE A.5 WALL UNIT-ZZ-4-12"SHELVES GLASS SECURITY CASE	1 00	Each		
42	PROVIDENCE B.1 GONDOLA UNIT ON CASTERS, SHELVES, WIRE FENCE - DIVIDERS, END FRAMES (2), WRAPAROUND SHELVES	2 00	Each		
43	PROVIDENCE B 2 GONDOLA UNIT ON CASTERS, SHELVES, WIRE FENCE - DIVIDERS, END FRAMES (2) WRAPAROUND SHELVES	2 00	Each		
44	LINCOLN OAK MELAMINE;WILSONART:#4574-7 MESA TWILIGHT G 4 PALLETT W/TOE KICK	6 00	Each		
45	LINCOLN A 8-A 8A FORTY FIVE DEGREE CORNER COUNTER	3 00	Each		

It is the Vendor's responsibility to check and download any and all addenda from the RIVIP This offer may not be considered unless a signed RIVIP generated Bidder Certification Cover Form is attached and the Unit Price column is completed The signed Certification Cover Form must be attached to the front of the offer

Request for Quote

STATE OF RHODE ISLAND AND PROVIDENCE PLANTATIONS
ONE CAPITOL HILL
PROVIDENCE RI 02908

CREATION DATE : 16-MAY-12
BID NUMBER: 7449739
TITLE: FIXTURES IN BOOKSTORES - CCRI

BLANKET START : 01-JUN-12
BLANKET END : 31-DEC-12
BID CLOSING DATE AND TIME:22-JUN-2012 02:00:00

BUYER: Mosca, Gary
PHONE #: 401-574-8124

BILL TO
CCRI CONTROLLER'S OFFICE
ACCOUNTS PAYABLE
400 EAST AVENUE
WARWICK, RI 02886
US

SHIP TO
CCRI KNIGHT CAMPUS
400 EAST AVE
WARWICK, RI 02886-1807
US

Requistion Number: 1269798
Note to Bidders: Questions concerning this solicitation may be emailed to gary.mosca@purchasing ri gov no later than 6/12/12 @ 12:00 NOON (EST) Questions should be submitted in a Microsoft word attachment Please reference the RFQ # on all correspondence Questions received if any will be posted on the internet as an addendum to this solicitation It is the responsibility of all interested parties to download this information

Line	Description	Quantity	Unit	Unit Price	Total
46	LINCOLN A.1 WORK INFO COUNTER W/MODIFIED CHECK LEDGE	1 00	Each		
47	LINCOLN A.2 WORK INFO COUNTER W/MODIFIED CHECK LEDGE	1 00	Each		
48	LINCOLN A.3 WORK INFO COUNTER-NO DRAWERS	1 00	Each		
49	LINCOLN A 4 BASIC COUNTER	1 00	Each		
50	LINCOLN A 5 BASIC COUNTER	1 00	Each		
51	LINCOLN A 6 BASIC COUNTER	1 00	Each		
52	LINCOLN A 7 BASIC COUNTER ON CASTERS	1 00	Each		
53	LINCOLN A.9 COUNTER MOUNTED TAPE RECEIVER AND HOLDER	2 00	Each		
54	LINCOLN B 2 SLATWALL 4 WAY ON CASTERS W/HOOKS, SHELVES, SHELF BRACKETS	2 00	Each		
55	LINCOLN VALANCE L SHAPE CORNICE W/SIGN TRACK FLIP BOLTS	25 00	Each		
56	LINCOLN C 2,T 7 GONDOLA END PANEL NO SW	9 00	Each		
57	LINCOLN C.1-T.3A SLATWALL PANELS W/METAL INSERTS TO FIT MADIX 84-36	4 00	Each		
58	LINCOLN D 2 T 5 WALL END PANEL	9.00	Each		

It is the Vendor's responsibility to check and download any and all addenda from the RIVIP This offer may not be considered unless a signed RIVIP generated Bidder Certification Cover Form is attached and the Unit Price column is completed. The signed Certification Cover Form must be attached to the front of the offer

Request for Quote

STATE OF RHODE ISLAND AND PROVIDENCE PLANTATIONS
ONE CAPITOL HILL
PROVIDENCE RI 02908

CREATION DATE : 16-MAY-12
BID NUMBER: 7449739
TITLE: FIXTURES IN BOOKSTORES - CCRI

BLANKET START : 01-JUN-12
BLANKET END : 31-DEC-12
BID CLOSING DATE AND TIME:22-JUN-2012 02:00:00

BUYER: Mosca Gary
PHONE #: 401-574-8124

BILL TO
CCRI CONTROLLER'S OFFICE
ACCOUNTS PAYABLE
400 EAST AVENUE
WARWICK, RI 02886
US

SHIP TO
CCRI KNIGHT CAMPUS
400 EAST AVE
WARWICK, RI 02886-1807
US

Requistion Number: 1269798
Note to Bidders: Questions concerning this solicitation may be emailed to gary.mosca@purchasing ri gov no later than 6/12/12 @ 12:00 NOON (EST) Questions should be submitted in a Microsoft word attachment Please reference the RFQ # on all correspondence Questions received if any will be posted on the internet as an addendum to this solicitation It is the responsibility of all interested parties to download this information

Line	Description	Quantity	Unit	Unit Price	Total
59	LINCOLN F 1,G.1 SLATWALL BACK W/METAL INSERTS TO FIT MADIX GONDOLA 54-48	36 00	Each		
60	LINCOLN F.2,G.2 S.2 SLATWALL BACK W/METAL INSERTS TO FIT MADIX GONDOLA 54-48	24 00	Each		
61	LINCOLN T 6 CORNER COLUMN	1 00	Each		
62	LINCOLN T 8 GATE W/HARDWARE	1 00	Each		
63	LINCOLN STEEL FIXTURES:MADIX: SAHARA C.1 WALL UNIT HZ-HD SW SPANNERS, SHELVES, DIVIDERS WIRE FRONTS	2 00	Each		
64	LINCOLN D 1 WALL HZ W/SHELVES	2 00	Each		
65	F 1 FLEX GONDOLA-ZZ-W/SHELVES, WIRE FRONTS DIVIDERS CASTERS SW LINCOLN	12 00	Each		
66	LINCOLN F 2 END FRAME-HZ-1 WRAPAROUND SHELF-SIGN HOLDER	12 00	Each		
67	LINCOLN G.1 GONDOLA-HH-6-18" SHELVES-EXTENSION-TWO SIGN HOLDERS	24 00	Each		
68	LINCOLN G 3 END FRAME-H-SIGN HOLDER	6 00	Each		
69	LINCOLN G.2 END FRAME-HZ-1 WRAPAROUND SHELF-SIGN HOLDER	6 00	Each		
70	LINCOLN S.1 GONDOLA ON CASTERS-ZZ-SHELVES-WIRE FRONTS- DIVIDERS	6 00	Each		
71	LINCOLN S 2 END FRAME-1 WRAP AROUND SHELF-SIGN HOLDER	6 00	Each		

It is the Vendor's responsibility to check and download any and all addenda from the RIVIP This offer may not be considered unless a signed RIVIP generated Bidder Certification Cover Form is attached and the Unit Price column is completed The signed Certification Cover Form must be attached to the front of the offer

Request for Quote

STATE OF RHODE ISLAND AND PROVIDENCE PLANTATIONS
ONE CAPITOL HILL
PROVIDENCE RI 02908

CREATION DATE : 16-MAY-12
BID NUMBER: 7449739
TITLE: FIXTURES IN BOOKSTORES - CCRI

BLANKET START : 01-JUN-12
BLANKET END : 31-DEC-12
BID CLOSING DATE AND TIME:22-JUN-2012 02:00:00

BUYER: Mosca, Gary
PHONE #: 401-574-8124

BILL TO
CCRI CONTROLLER'S OFFICE
ACCOUNTS PAYABLE
400 EAST AVENUE
WARWICK, RI 02886
US

SHIP TO
CCRI KNIGHT CAMPUS
400 EAST AVE
WARWICK, RI 02886-1807
US

Requistion Number: 1269798
Note to Bidders: Questions concerning this solicitation may be emailed to gary mosca@purchasing ri.gov no later than 6/12/12 @ 12:00 NOON (EST) Questions should be submitted in a Microsoft word attachment Please reference the RFQ # on all correspondence Questions received if any will be posted on the internet as an addendum to this solicitation It is the responsibility of all interested parties to download this information

Line	Description	Quantity	Unit	Unit Price	Total
72	LINCOLN T 1 WALL-HZ-SHELVES	21 00	Each		
73	LINCOLN T 1A WALL-HZ-SHELVES	4 00	Each		
74	LINCOLN T.3 OFFSET GONDOLA-HH-SHELVES-CANOPY FLANGY	7 00	Each		
75	LINCOLN T.4 OFFSET GONDOLA-HH-SHELVES-CANOPY FLANGE	1 00	Each		
76	LINCOLN T.2 WALL UNIT HZ-HD SW SPANNERS SHELVES DIVIDERS	5 00	Each		
77	LINCOLN T.3A OFFSET GONDOLA-HH-SHELVES-CANOPY FLANAGE	2 00	Each		

Delivery: _____

Terms of Payment: _____

It is the Vendor's responsibility to check and download any and all addenda from the RIVIP This offer may not be considered unless a signed RIVIP generated Bidder Certification Cover Form is attached and the Unit Price column is completed The signed Certification Cover Form must be attached to the front of the offer

Contract Terms and Conditions

Table of Contents

Terms and Conditions. XXII
BID STANDARD TERMS AND CONDITIONS XXII
TERMS AND CONDITIONS FOR THIS BID XXII
SURETY REQUIREMENTS XXII
START DATE XXII
WAGE REQUIREMENTS XXII
INSPECTION REQUIREMENTS XXII
INSURANCE REQUIREMENTS XXII
DELIVERY PER AGENCY XXIII
RIVIP INFO - BID SUBMISSION REQUIREMENTS XXIII
AWARD XXIII
LICENSE REQUIREMENTS XXIII
VENDOR SPECIFICATIONS XXIII
READING VENDOR NAMES ONLY XXIII

Terms and Conditions

BID STANDARD TERMS AND CONDITIONS

TERMS AND CONDITIONS FOR THIS BID

SURETY REQUIREMENTS

BIDDER IS REQUIRED TO PROVIDE A BID SURETY IN THE FORM OF A BID BOND, OR A CERTIFIED CHECK PAYABLE TO THE STATE OF RHODE ISLAND, IN THE AMOUNT OF A SUM NOT LESS THAN FIVE PERCENT (5%) OF THE BID PRICE. BID SURETY MUST BE ATTACHED TO THE BID FORM. THE SUCCESSFUL BIDDER WILL ALSO BE REQUIRED TO FURNISH PERFORMANCE AND LABOR AND PAYMENT BONDS AT TIME OF TENTATIVE CONTRACT AWARD

START DATE

STARTING DATE _____ NO. OF WORKING DAYS REQUIRED FOR COMPLETION _____

WAGE REQUIREMENTS

BIDDERS ARE ADVISED THAT ALL PROVISIONS OF TITLE 37 CHAPTER 13 OF THE GENERAL LAWS OF RHODE ISLAND APPLY TO THE WORK COVERED BY THIS REQUEST, AND THAT PAYMENT OF THE GENERAL PREVAILING RATE OF PER DIEM WAGES AND THE GENERAL PREVAILING RATE FOR REGULAR, OVERTIME, AND OTHER WORKING CONDITIONS EXISTING IN THE LOCALITY FOR EACH CRAFT, MECHANIC, TEAMSTER, OR TYPE OF WORKMAN NEEDED TO EXECUTE THIS WORK IS A REQUIREMENT FOR BOTH CONTRACTORS AND SUBCONTRACTORS. THE PREVAILING WAGE TABLE MAY BE OBTAINED AT THE RI DIVISION OF PURCHASES HOME PAGE BY INTERNET at www.purchasing.state.ri.us SELECT "INFORMATION" AND THEN SELECT "PREVAILING WAGE TABLE". THE STATE OF RHODE ISLAND USES THE GENERAL DECISION NUMBER RI20100001. PRINTING THE ENTIRE DOCUMENT AVERAGES APPROXIMATELY ONE MINUTE PER PAGE - YOU MAY WANT TO PRINT ONLY THE PAGES APPLICABLE TO YOUR BID. BIDDERS NOTE: IN THE EVENT THIS BID SPECIFIES PRICE OFFERS ON A TIME-AND-MATERIALS BASIS, i.e., AN HOURLY RATE, ANY OR ALL BIDS SUBMITTED IN AN AMOUNT LESS THAN THE PREVAILING RATE IN EFFECT FOR THE WORK COVERED BY THIS REQUEST AS OF THE DATE OF BID ISSUANCE SHALL BE REJECTED BY THE DIVISION OF PURCHASES.

INSPECTION REQUIREMENTS

BIDDERS ARE RESPONSIBLE FOR INSPECTION OF EQUIPMENT AND/OR LOCATION, TAKING MEASUREMENTS* WHEN REQUIRED, AND MAKING THEMSELVES AWARE OF THE TOTAL REQUIREMENT BEFORE SUBMITTING A BID. *MEASUREMENTS PROVIDED WITH ANY BID ARE FOR REFERENCE PURPOSES AND ARE NOT GUARANTEED TO BE COMPLETELY ACCURATE.

INSURANCE REQUIREMENTS

AN INSURANCE CERTIFICATE IN COMPLIANCE WITH PROVISIONS OF ITEM 31 (INSURANCE) OF THE GENERAL CONDITIONS OF PURCHASE IS REQUIRED FOR COMPREHENSIVE GENERAL LIABILITY, AUTOMOBILE LIABILITY, AND WORKERS'

COMPENSATION AND MUST BE SUBMITTED BY THE SUCCESSFUL BIDDER(S) TO THE DIVISION OF PURCHASES PRIOR TO AWARD. THE INSURANCE CERTIFICATE MUST NAME THE STATE OF RHODE ISLAND AS CERTIFICATE HOLDER AND AS AN ADDITIONAL INSURED. FAILURE TO COMPLY WITH THESE PROVISIONS MAY RESULT IN REJECTION OF THE OFFEROR'S BID. ANNUAL RENEWAL CERTIFICATES MUST BE SUBMITTED TO THE AGENCY IDENTIFIED ON THE PURCHASE ORDER FAILURE TO DO SO MAY BE GROUNDS FOR CANCELLATION OF CONTRACT

NOTE: IF THIS BID COVERS CONSTRUCTION, SCHOOL BUSING, HAZARDOUS WASTE, OR VESSEL OPERATION, APPLICABLE COVERAGES FROM THE FOLLOWING LIST MUST ALSO BE SUBMITTED TO THE DIVISION OF PURCHASES PRIOR TO AWARD: * PROFESSIONAL LIABILITY INSURANCE (AKA ERRORS & OMISSIONS) - $1 MILLION OR 5% OF ESTIMATED PROJECT COST, WHICHEVER IS GREATER * BUILDER'S RISK INSURANCE - COVERAGE EQUAL TO FACE AMOUNT OF CONTRACT FOR CONSTRUCTION. * SCHOOL BUSING - AUTO LIABILITY COVERAGE IN THE AMOUNT OF $5 MILLION * ENVIRONMENTAL IMPAIRMENT (AKA POLLUTION CONTROL) - $1 MILLION OR 5% OF FACE AMOUNT OF CONTRACT, WHICHEVER IS GREATER. * VESSEL OPERATION - (MARINE OR AIRCRAFT) - PROTECTION & INDEMNITY COVERAGE REQUIRED IN THE AMOUNT OF $1 MILLION

DELIVERY PER AGENCY

DELIVERY OF GOODS OR SERVICES AS REQUESTED BY AGENCY

RIVIP INFO - BID SUBMISSION REQUIREMENTS

It is the Vendor's responsibility to check and download any and all addenda from the RIVIP. This offer may not be considered unless a signed RIVIP generated Bidder Certification Cover Form is attached and the Unit Price column is completed The signed Certification Cover Form must be attached to the front of the offer When delivering offers in person to One Capitol Hill, vendors are advised to allow at least one hour additional time for clearance through security checkpoints

AWARD

THE STATE, AT ITS SOLE DISCRETION, SHALL RESERVE THE RIGHT TO MAKE ONE OR MULTIPLE AWARDS FOR THIS REQUIREMENT AND/OR TO REJECT ANY OR ALL BIDS

LICENSE REQUIREMENTS

VENDOR (OWNER OF COMPANY) IS RESPONSIBLE TO COMPLY WITH ALL LICENSING OR STATE PERMITS REQUIRED FOR THIS TYPE OF SERVICE. A COPY OF LICENSE/PERMIT SHOULD BE SUBMITTED WITH THIS BID. IN ADDITION TO THESE LICENSE REQUIREMENTS, BIDDER, BY SUBMISSION OF THIS BID, CERTIFIES THAT ANY/ALL WORK RELATED TO THIS BID, AND ANY SUBSEQUENT AWARD WHICH REQUIRES A RHODE ISLAND LICENSE(S), SHALL BE PERFORMED BY AN INDIVIDUAL(S) HOLDING A VALID RHODE ISLAND LICENSE

VENDOR SPECIFICATIONS

ALL VENDORS MUST INCLUDE SPECIFICATIONS WITH BID PROPOSAL (EVEN THOSE BIDDING BRAND SPECIFIED) FAILURE TO SUBMIT SPECIFICATIONS WITH BID PROPOSAL MAY RESULT IN DISQUALIFICATION OF BID ITEMS IN CATALOGS MUST BE CLEARLY MARKED AND PAGES TABBED

READING VENDOR NAMES ONLY

DUE TO LENGTH OF BID AND TIME CONSTRAINTS, THE STATE WILL ONLY ACKNOWLEDGE RECEIPT AND READ THE NAMES OF VENDORS SUBMITTING PROPOSALS NO EXAMINATION OF DOCUMENTS OR PRESENTATION OF INFORMATION CONTAINED IN

PROPOSALS WILL BE MADE AVAILABLE AT THE BID OPENING; HOWEVER, INSTRUCTIONS TO OBTAIN THE TABULATION OR SUMMARY OF BID RESPONSES WILL BE MADE AVAILABLE AT THE RI DIVISION OF PURCHASES WEBSITE AT WWW PURCHASING RI GOV

Fixture Specification

Provide:
slatwall back-3"oc- w/metal inserts -
material-maple melamine
shelves as shown

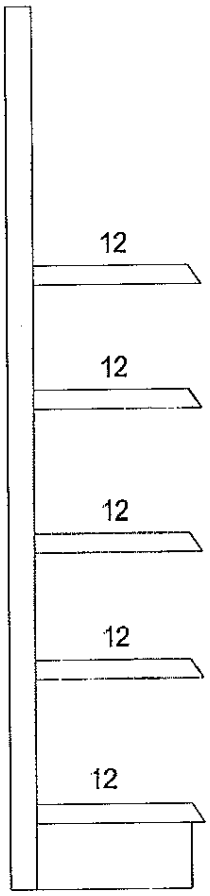

	Project	Item Identifier: A.2
	Community College of Rhode Island Providence, RI	Height: 84 Width: 36 Depth: 15 Finish: Sahara Quantity: 2

Fixture Specification

Provide:
slatwall back 3"oc w/metal inserts -
material maple melamine
shelves as shown
10 - 6" chrome slatwall hooks
1 - 6"h x 48" wide almond melamine panel
2-3" x 48" wire front fence
8 - 3" x 12" wire dividers

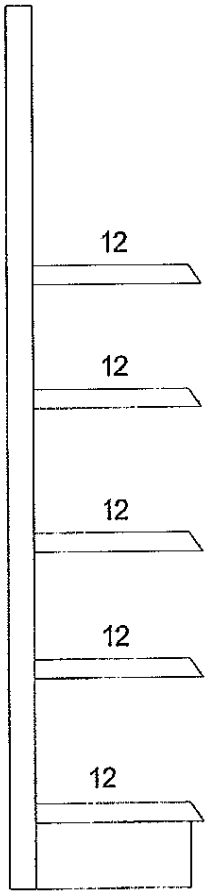

	Project	Item Identifier: A 3
	Community College of Rhode Island Providence, RI	Height: 90 Width: 48 Depth: 15 Finish: Sahara Quantity: 4

Fixture Specification

Provide:
slatwall back-3"oc- w/metal inserts
material-maple melamine
shelves as shown
10 - 6" chrome slatwall hooks
1 - 6"h x 96"w almond melamine panel
2-36" x 3" wire front fence
8 - 3" x 12" wire dividers

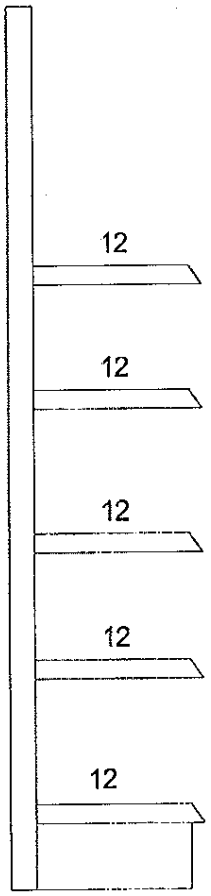

	Project	Item Identifier: A 4
	Community College of Rhode Island Providence, RI	Height: 90 Width: 36 Depth: 15 Finish: Sahara Quantity: 5

Fixture Specification

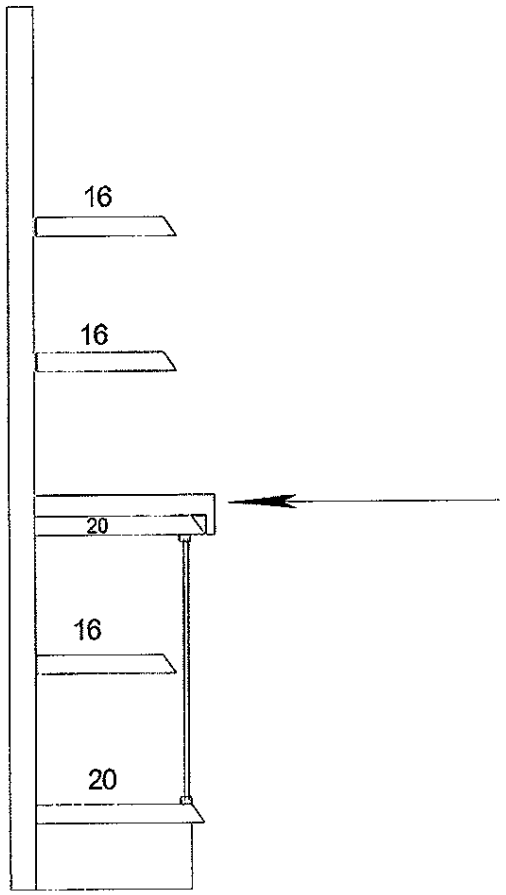

Provide:
Madix steel wall section
natural maple melamine slatwall back, 3" oc, with metal inserts
shelves as shown
Tempered glass sliding door kit - 24" high x 48" wide
Sliding door end panels - 2
Sliding door end fillers - 2
Lock for sliding doors
Drop edge countertop for display of electronics as shown. Lamnate to match countertop laminate (tbd)

Madix steel shelf wall unit	Project	Item Identifier: A.5
	Community College of Rhode Island Providence, RI	Height: 90 Width: 48 Depth: 23 Finish: Sahara Quantity: 1

Fixture Specification

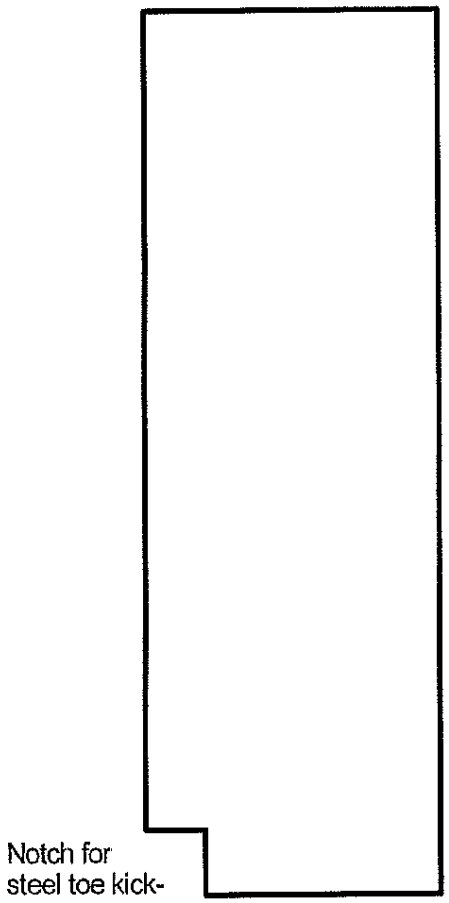

2/17/2011	Project	Item Identifier: A.6
	Community College of Rhode Island Providence, RI	Height: 85 Width: 15 Depth: .75 Finish: Maple Melamine Quantity: 9

Fixture Specification

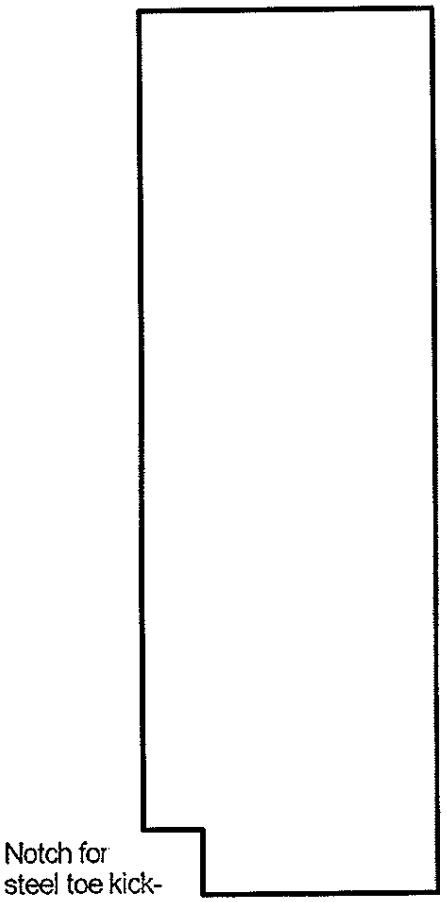

*CUT BACK OF END PANELS TO ACCOMMODATE CURVED WALL

2/17/2011	Project	Item Identifier: A 8
	Community College of Rhode Island Providence, RI	Height: 91 Width: 30* Depth: .75 Finish: Maple Melamine Quantity: 2

Fixture Specification

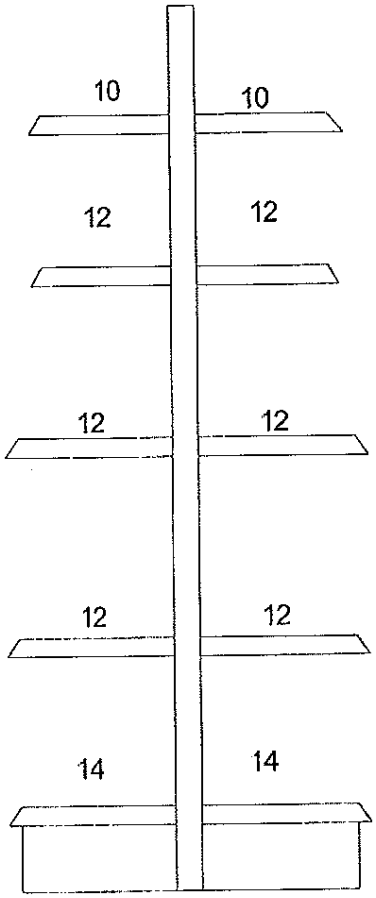

PROVIDE:
MAPLE MELAMINESLATWALL INTERIOR BACKS W/NATURAL ALUMINUM INSERTS
FACTORY SOURCED PLATE CASTERS ON GONDOLA & END DECKS
SHELVES AS SHOWN
8-3" X 48" FRONT WIRE FENCE
10 - 10" WIRE DIVIDERS
16 - 12" WIRE DIVIDERS
2 - END FRAMES W/MAPLE MELAMINESLATWALL INTERIOR BACK WITH NATURAL ALUMINUM INSERTS
2 - MOBILE END DECKS-12" DEEP
4 - 12" CONTOUR SHELVES FOR END DECK

MADIX MOBILE GONDOLA W/END PANELS AND MOBILE END DECKS

	Project: Bookstore	Item Identifier: B.1
	Community College of Rhode Island Providence, RI	Height: 54 Width: 48 Depth: 27 Finish: MAPLE MELAMINE Quantity: 2

Fixture Specification

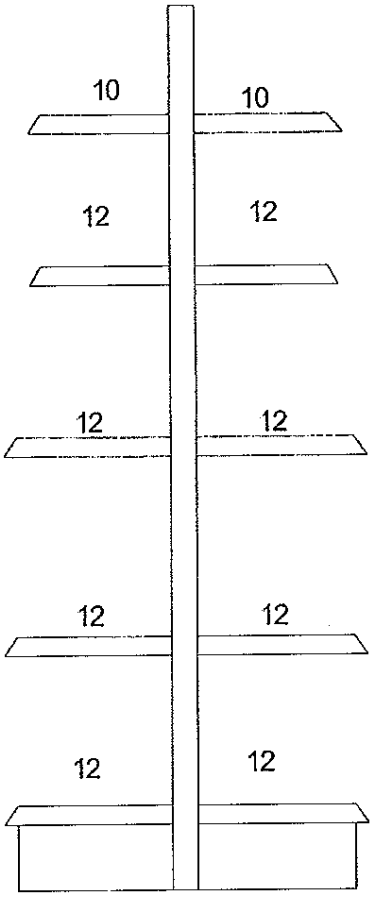

PROVIDE:
MAPLE MELAMINESLATWALL INTERIOR BACKS W/NATURAL ALUMINUM INSERTS
FACTORY SOURCED PLATE CASTERS ON GONDOLA
SHELVES AS SHOWN
8-3" X 36" FRONT WIRE FENCE
10 - 10" WIRE DIVIDERS
16 - 12" WIRE DIVIDERS
1 - END FRAMES W/MAPLE MELAMINESLATWALL INTERIOR BACK WITH NATURAL ALUMINUM INSERTS
1 - 12" CONTOUR SHELVES FOR END DECK

MADIX MOBILE GONDOLA W/END PANELS

	Project: Bookstore	Item Identifier: B.2
	Community College of Rhode Island Providence, RI	Height: 54 Width: 36 Depth: 27 Finish: MAPLE MELAMINE Quantity: 2

Fixture Specification

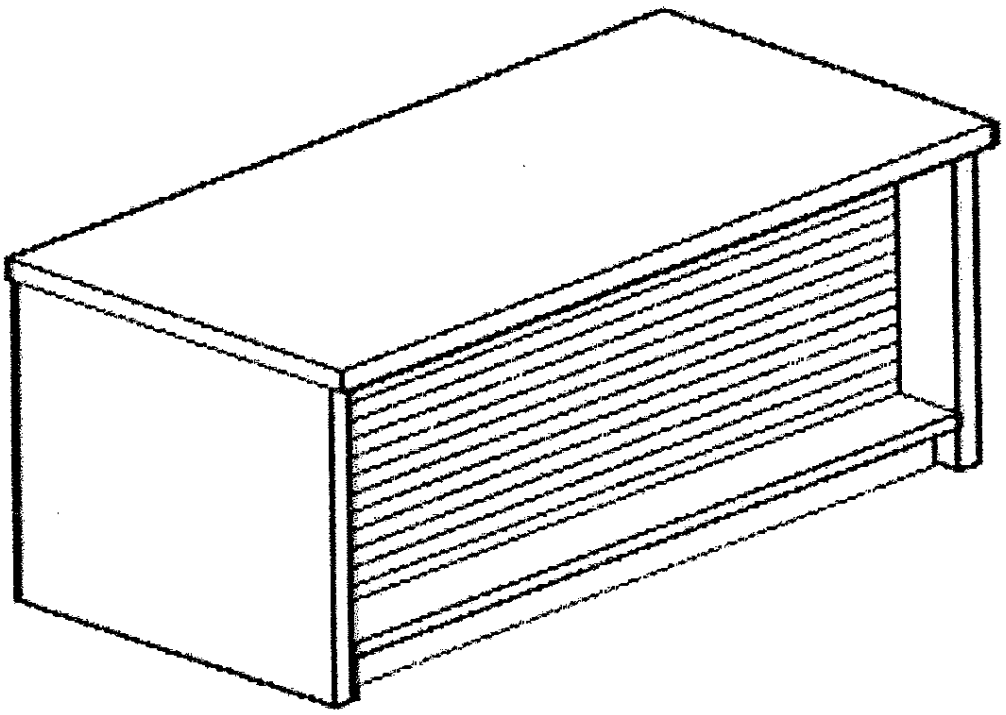

PROVIDE:
SLATWALL FRONT 3" OC RECESSED 8" W/METAL INSERTS
6 - LAMINATE SHELVES W/2" ACRYLIC LIP - 3/4" HIGH X 40" WIDE X 8" DEEP
12 - CHROME SLATWALL DOWNSLANT SHELF BRACKETS-8" DEEP
20 - SLATWALL CHROME HOOKS - 6"
3 - ACCESS PANELS IN COUNTER BASE SHELF
2 - WIRE GROMMETS INSTALLED IN FIELD
1 NOTCH IN END PANEL FOR WIRE PASSTHROUGH - RIGHT

Item Description: TEXT INFO COUNTER

Client: CCRI

Project: Bookstore-Providence

Item Identifier: C.1

Height: 36
Width: 84
Depth: 24
Finish: MAPLE MELAMINE
Quantity: 1
spec by: FFI

Fixture Specification

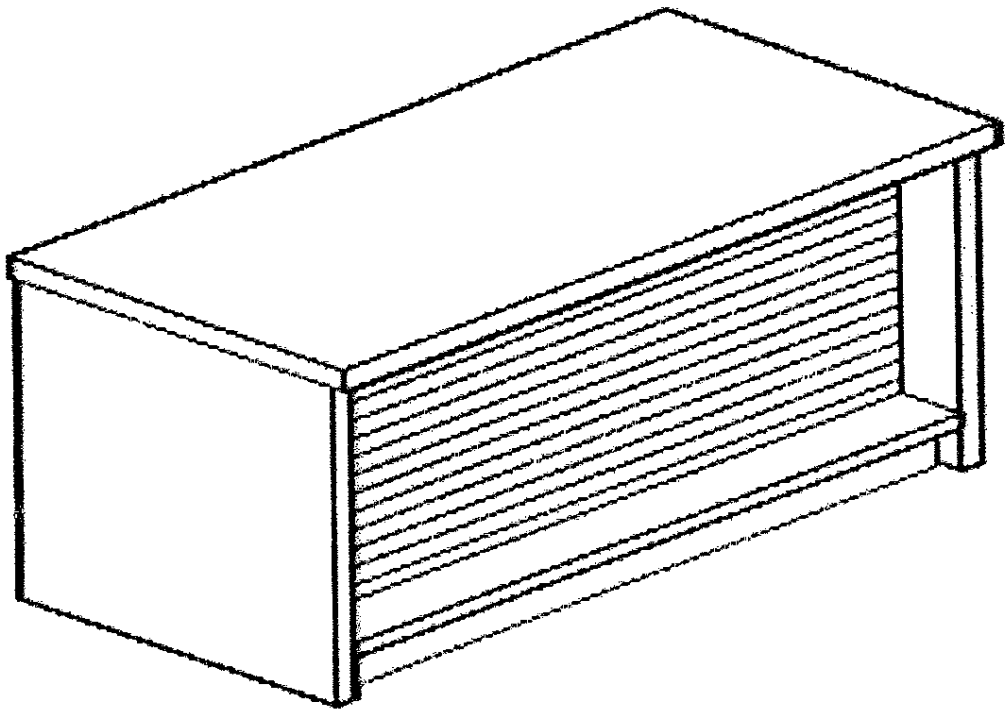

PROVIDE:
SLATWALL FRONT 3" OC RECESSED 8" W/METAL INSERTS
6 - LAMINATE SHELVES W/2" ACRYLIC LIP - 3/4" HIGH X 40" WIDE X 8" DEEP
12 - CHROME SLATWALL DOWNSLANT SHELF BRACKETS-8" DEEP
20 - SLATWALL CHROME HOOKS - 6"
3 - ACCESS PANELS IN COUNTER BASE SHELF
2 - WIRE GROMMETS INSTALLED IN FIELD
2 NOTCHS IN END PANELS FOR WIRE PASSTHROUGH - RIGHT & LEFT

Item Description: TEXT INFO COUNTER

Client: CCRI

Project: Bookstore-Providence

Item Identifier: C.2

Height: 36
Width: 84
Depth: 24
Finish: MAPLE MELAMINE
Quantity: 1
spec by: FFI

Fixture Specification

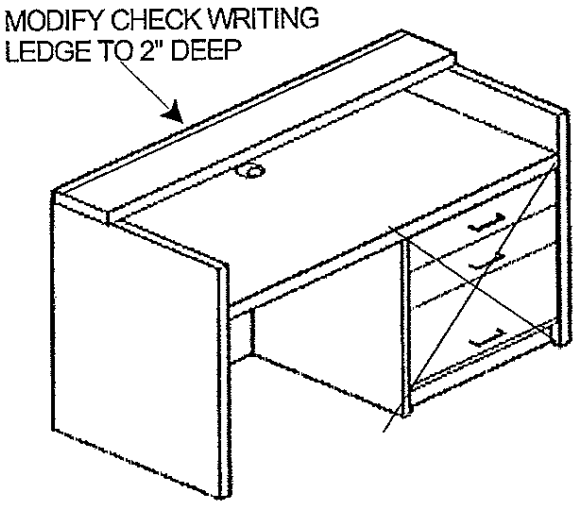

NO DRAWERS THIS UNIT

TO INCLUDE:
NO DRAWERS
CHECK WIRITING LEDGE 8" DEEP
WRITING SURFACE TO BE AT 30" HIGH
INCLUDE TWO WIRE GROMMETS
INSTALLED IN FIELD
INCLUDE CABLE TRAY UNDER WRITING
SURFACE FOR WIRE MANAGEMENT

Item Description: TEXT INFO COUNTER

Client: CCRI

Project: Bookstore-Providence

Item Identifier: C.3

Height: 42
Width: 48
Depth: 30
Finish: SAHARA
Quantity: 1
spec by: FFI

Fixture Specification

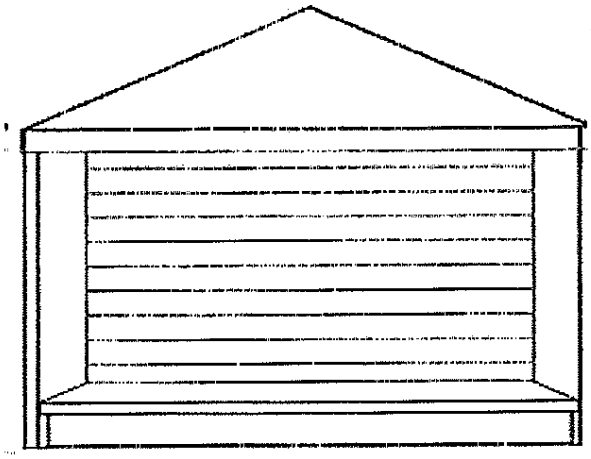

PROVIDE:
SLATWALL 3"OC RECESSED W/METAL INSERTS
2 NOTCHES IN END PANELS FOR WIRE PASSTHROUGH - RIGHT & LEFT

Item Description:

Client: CCRI

Project: Bookstore-Providence

Item Identifier: C.4

Height: 42
Width: 30
Depth: 24
Finish: MAPLE MELAMINE
Quantity: 1
spec by: FFI

Fixture Specification

PROVIDE AND INSTALL:

4 - SLATWALL PANELS - 96" HIGH X 48" WIDE X .75 DEEP WITH NATURAL ALUMINUM INSERTS. FINISH TO BE MAPLE MELAMINE
2 - SLATWALL TRIM - 4" HIGH X 96" WIDE - EDGEBAND ON LONG EDGE
4 - SLATWALL TRIM - 96" HIGH X 1.5" WIDE X .75" DEEP EDGEBAND ONE LONG EDGE
CLEATS AND BLOCKING TO INSTALL AS NECESSARY

SLATWALL W/ TRIM

	Project: Bookstore	Item Identifier: S.1
	Community College of Rhode Island Providence, RI	Height: AS NOTED Width: AS NOTED Depth: AS NOTED Finish: MAPLE MELAMINE Quantity: AS NOTED

Fixture Specification

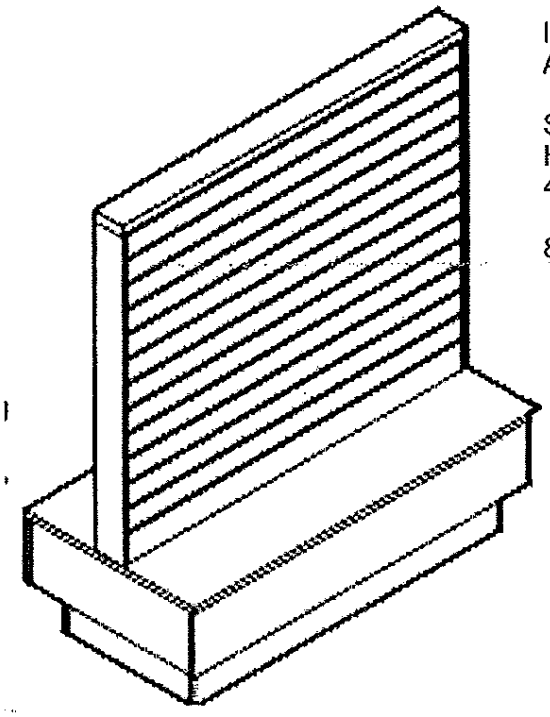

INCLUDE:
ALL SLATWALL TO HAVE NATURAL
ALUMINUM INSERTS
SLATWALL 3" OC
HEAVY DUTY CASTERS
4 - DURON SHELVES-24"WIDE X 13" DEEP-
ALMOND - CLOSED BOTTOM
8 - 12" CHROME SLATWALL SHELF BRACKETS

Item Description: SLATWALL TWO WAY ON CASTERS

Client: CCRI

Project: Bookstore-Providence

Item Identifier: S.2

Height: 54
Width: 24
Depth: 24
Finish: MAPLE MELAMINE
Quantity: 1
spec by: FFI

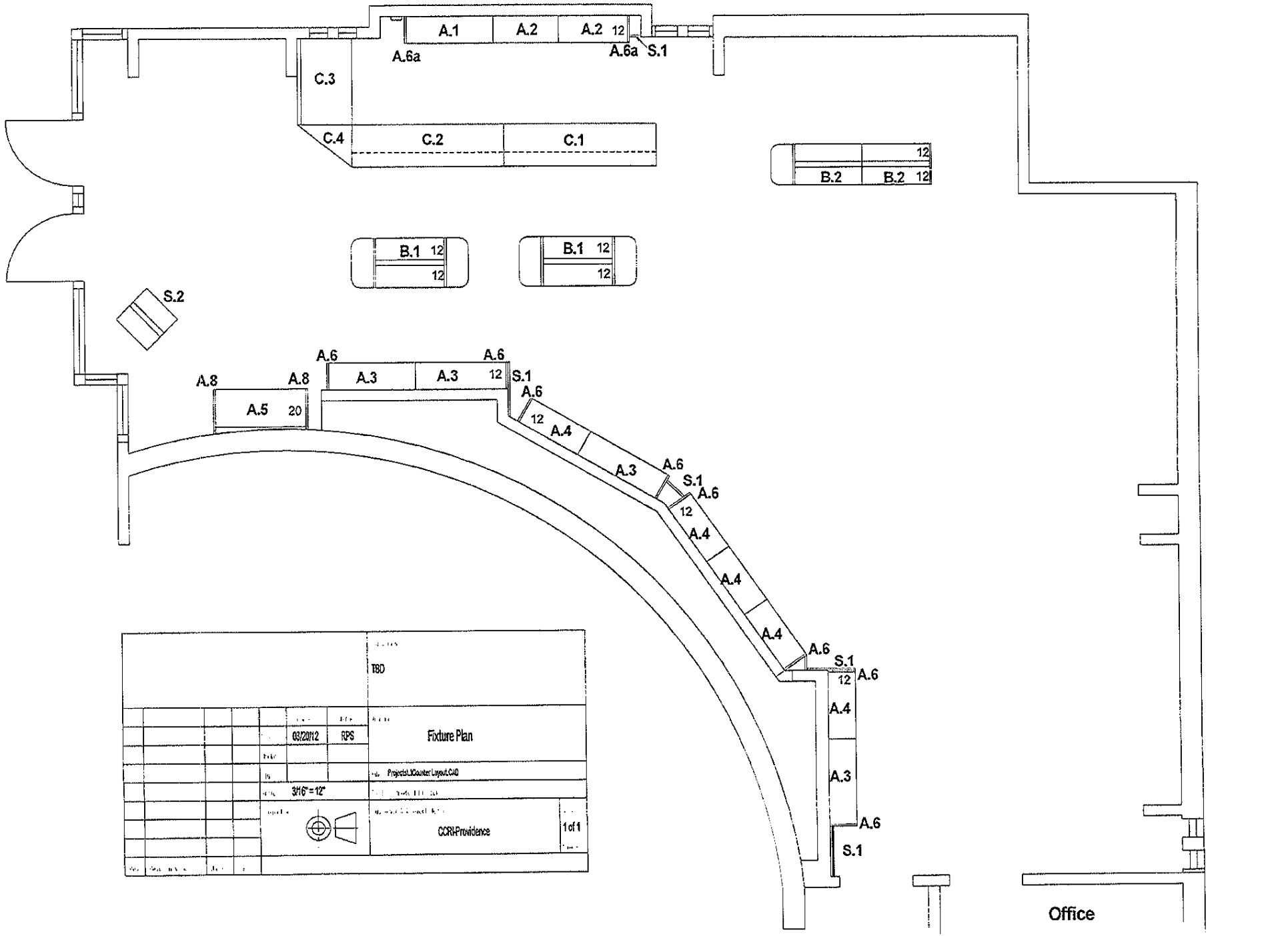
A.1
A.2
A.2 12
A.6a
A.6a
S.1
C.3
C.4
C.2
C.1
12
B.2
B.2 12
B.1 12
12
B.1 12
12
S.2
A.8
A.8
A.6
A.6
A.3
A.3 12
S.1
A.6
A.5 20
12
A.4
A.3
A.6
S.1
A.6
12
A.4
A.4
A.4
A.6
S.1
12
A.6
A.4
A.3
A.6
S.1
Office
TBD
03/20/12
RPS
Fixture Plan
Projects\JCounter Layout.CAD
3/16" = 12"
CCRI-Providence
1of1

Demolition, Installation & Fixture Specifications
Commuity College of Rhode Island
All Bookstore Locations

Community College of Rhode Island-Bookstore Fixtures

Pre Bid Worksite visit:

It is stronlgly recommended that interested bidder visit each worksite to review demolition conditions, load in logistics, contractor access and field measurements. Fixture contractor will be totally responsible for all site dimensions, mechanical locations, electrical locations and field conditions.

General Fixture Specifications:

A] Counters

1] All fixtures are to be priced in standard color melamine on mdf.
2] All countertops are to be standard grade High Pressure Laminate from Formica, Wilsonart or Pionite
3] All countertops are to be particleboard substrate 1.125" thick.
4] All counters are to be part of a modular counter system.
5] All connecters are to be hidden if possible
6] All panels and mid panels on counters are to be notched for electrical access as noted on spec sheets
7] All access panels specefied are to be removable from base shelf and match finish
8] All grommets are to be 2" black plastic
9] Light in showcase to include ballast in base for electrical connection.
10] All counters are to be installed, leveled and connected per plan with concealed connectors
11] All counter cavities are to have one adjustable shelf with holes and pins shelf support

Delolition Notes:

1] All electrical disconnect and reconnect is provided by owner's electrical contractor
2] All demolished material will be disposed of by owner. Move within building per owners instructions
3] Demolition is to take place in designated areas only. There is to be no storage of debris in the store sales area.
4] All areas under demolition must be protected and all effort is to be taken to prohibit public access

Installation Notes:

1] All installation to be done by trained store fixture installers. Additional labor is to be determined by fixture contractor. All labor must be covered by workmans compensation and liability insurance. Proof of insurance is to be made available to owner.
2] Area under demolition and fixture installation to be protected from public access.
3] All work is to be performed according to state and local building codes

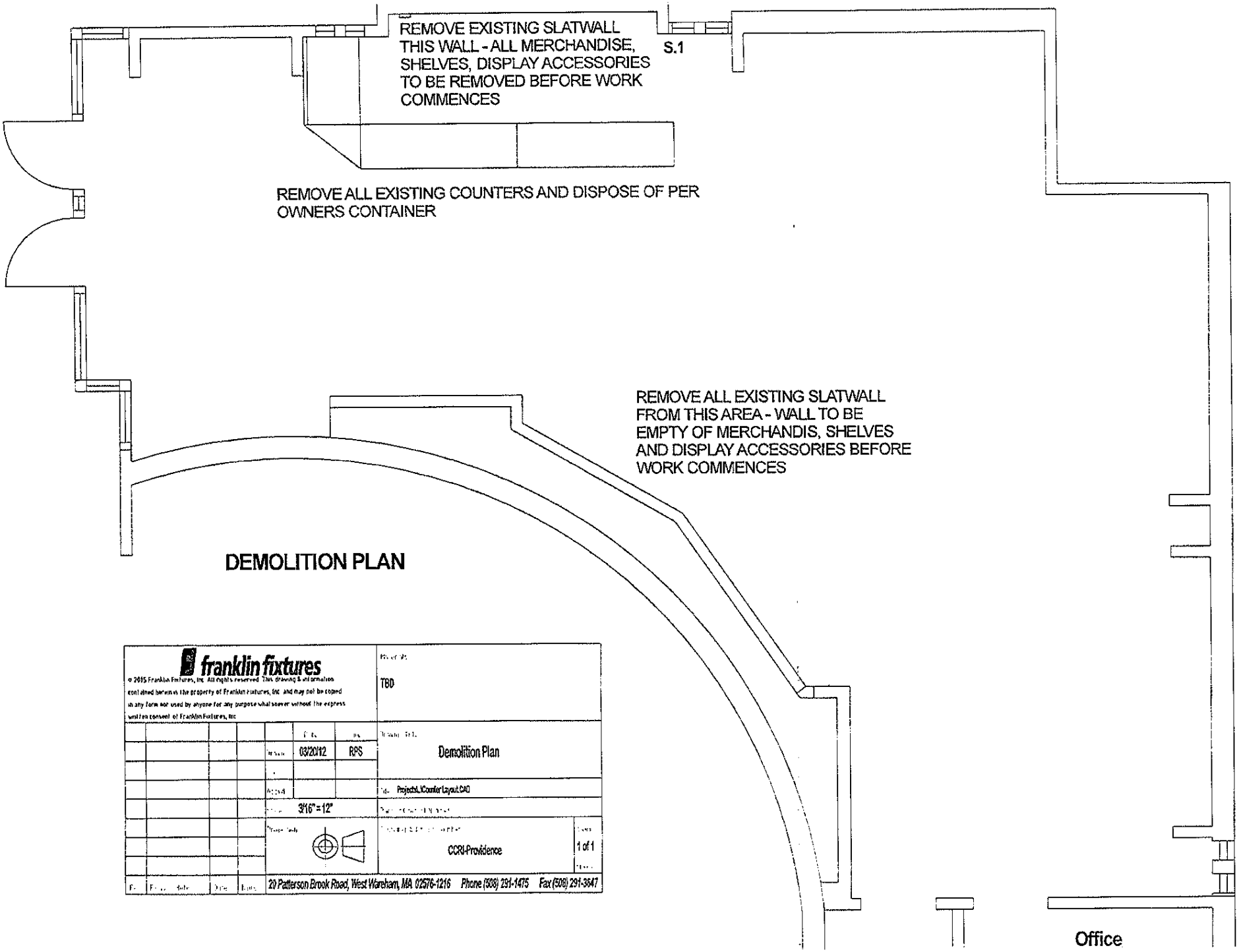

© 2005 Franklin Fixtures, Inc. All rights reserved. This drawing & information contained herein is the property of Franklin Fixtures, Inc. and may not be copied in any form nor used by anyone for any purpose whatsoever without the express written consent of Franklin Fixtures, Inc.

franklin fixtures

TBD

03/20/12	RPS
Demolition Plan	
Projects\JC\center Layout.CAD	
3/16" = 12"	
CCRI-Providence	1 of 1

20 Patterson Brook Road, West Wareham, MA 02576-1216 Phone (508) 291-1475 Fax (508) 291-3647

Fixture Specification

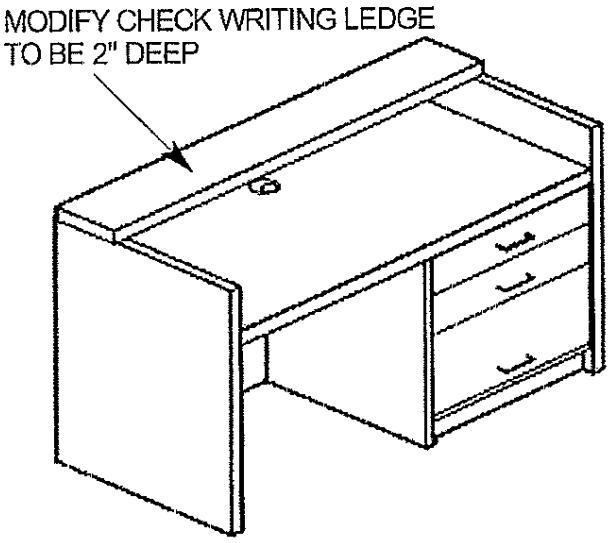

TO INCLUDE:
DRAWERS RIGHT (LETTER SIZE
FILE DRAWER & TWO EQUAL
SIZE SMALLER DRAWERS
CHECK WIRITING LEDGE 2" DEEP
WRITING SURFACE TO BE AT 30" HIGH
INCLUDE TWO WIRE GROMMETS
INSTALLED IN FIELD
INCLUDE CABLE TRAY UNDER WRITING
SURFACE FOR WIRE MANAGEMENT

Item Description: TEXT INFO COUNTER W/MODIFIED CHECK WRITING LEDGE

Client: CCRI

Project: Bookstore-Lincoln

Item Identifier: A.1

Height: 42
Width: 84
Depth: 30
Finish: SAHARA
Quantity: 1
spec by: FFI

Fixture Specification

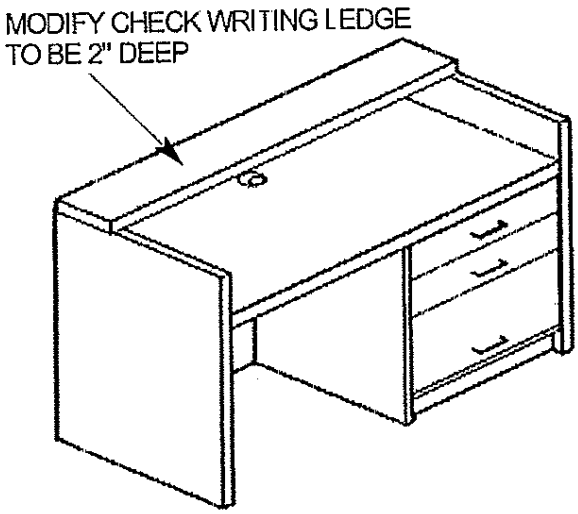

TO INCLUDE:
DRAWERS RIGHT (LETTER SIZE
FILE DRAWER & TWO EQUAL
SIZE SMALLER DRAWERS
CHECK WIRITING LEDGE 2" DEEP
WRITING SURFACE TO BE AT 30" HIGH
INCLUDE TWO WIRE GROMMETS
INSTALLED IN FIELD
INCLUDE CABLE TRAY UNDER WRITING
SURFACE FOR WIRE MANAGEMENT

Item Description: TEXT INFO COUNTER W/MODIFIED CHECK WRITING LEDGE

Client: CCRI

Project: Bookstore-Lincoln

Item Identifier: A.2

Height: 42
Width: 72
Depth: 30
Finish: SAHARA
Quantity: 1
spec by: FFI

Fixture Specification

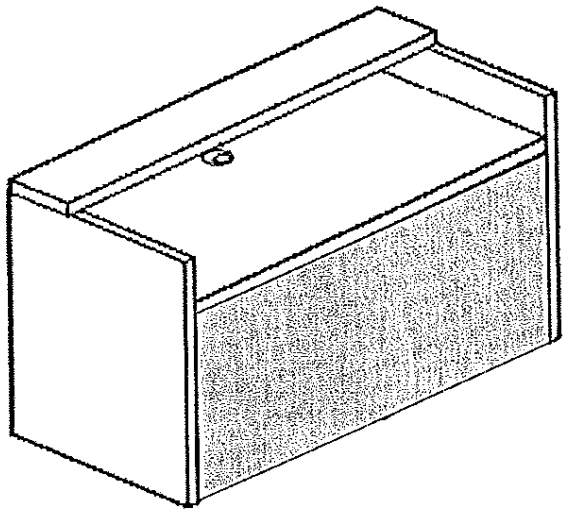

TO INCLUDE:
NO DRAWERS
CHECK WIRITING LEDGE 8" DEEP
WRITING SURFACE TO BE AT 30" HIGH
INCLUDE TWO WIRE GROMMETS
INSTALLED IN FIELD
INCLUDE CABLE TRAY UNDER WRITING
SURFACE FOR WIRE MANAGEMENT

Item Description: TEXT INFO COUNTER

Client: CCRI

Project: Bookstore-Lincoln

Item Identifier: A.3

Height: 42
Width: 66
Depth: 30
Finish: SAHARA
Quantity: 1
spec by: FFI

Fixture Specification

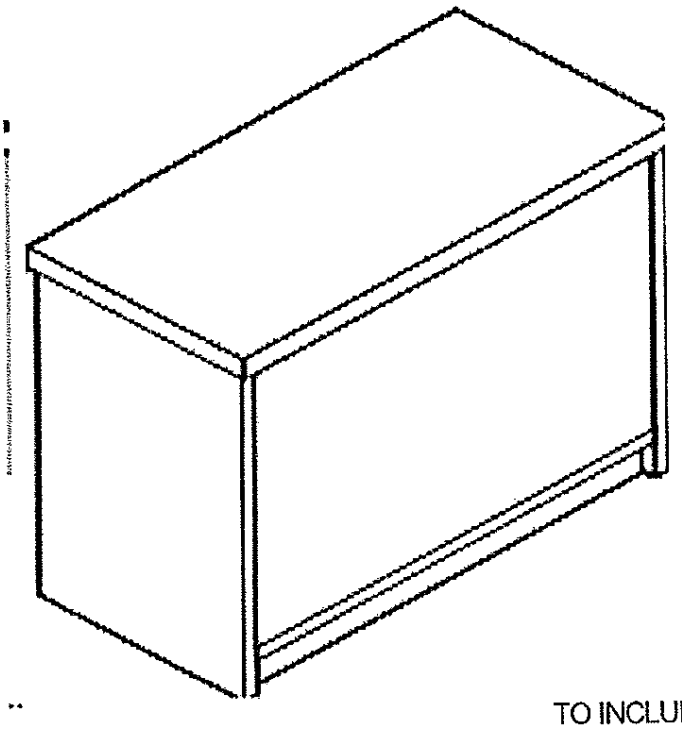

TO INCLUDE:
ONE ADJUSTABLE SHELF PER CAVITY -
HOLES AND PINS SUPPORT
ONE WIRE GROMMET INSTALLED IN FIELD
ONE WIRE PASSTHROUGH NOTCH

Item Description: SERVICE COUNTER

Client: CCRI

Project: Bookstore-Lincoln

Item Identifier: A.4

Height: 36
Width: 42
Depth: 30
Finish: SAHARA
Quantity: 1
spec by: FFI

Fixture Specification

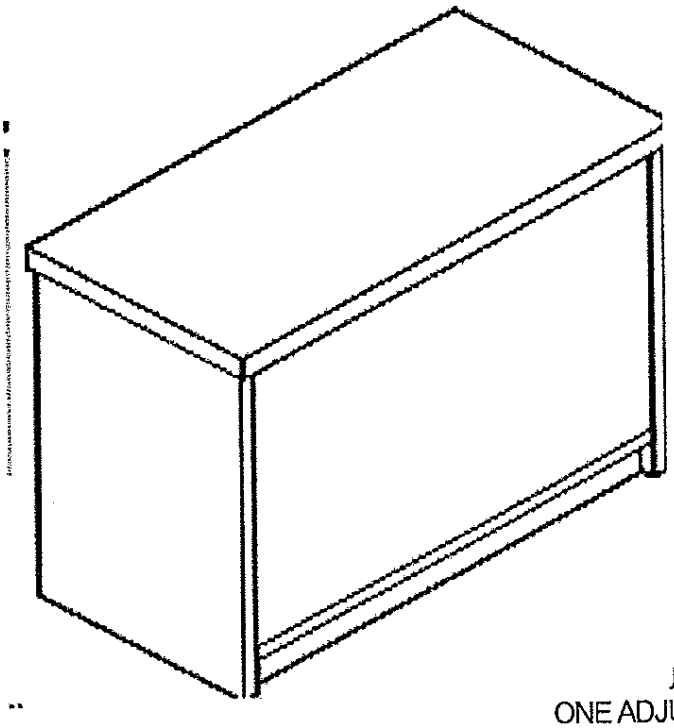

JDE:
ONE ADJUSTABLE SHELF PER CAVITY -
HOLES AND PINS SUPPORT
ONE WIRE GROMMET INSTALLED IN FIELD
PROVIDE NOTCH FOR WIRE PASSTHROUGH
EACH SIDE

Item Description: SERVICE COUNTER

Client: CCRI

Project: Bookstore-Lincoln

Item Identifier: A.5

Height: 36
Width: 30
Depth: 30
Finish: SAHARA
Quantity: 1
spec by: FFI

Fixture Specification

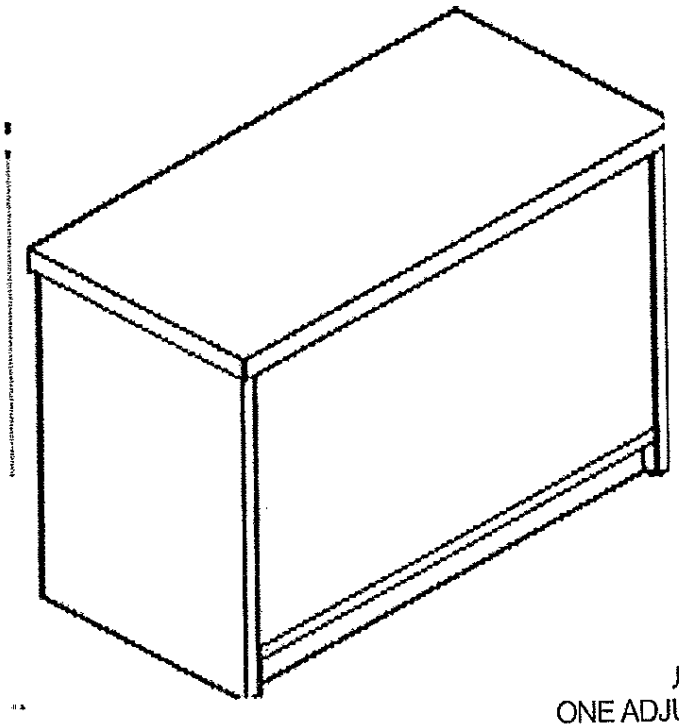

JDE:
ONE ADJUSTABLE SHELF PER CAVITY -
HOLES AND PINS SUPPORT
ONE WIRE GROMMET INSTALLED IN FIELD
PROVIDE NOTCH FOR WIRE PASSTHROUGH
EACH SIDE

Item Description: SERVICE COUNTER

Client: CCRI

Project: Bookstore-Lincoln

Item Identifier: A.6

Height: 36
Width: 48
Depth: 30
Finish: SAHARA
Quantity: 1
spec by: FFI

Fixture Specification

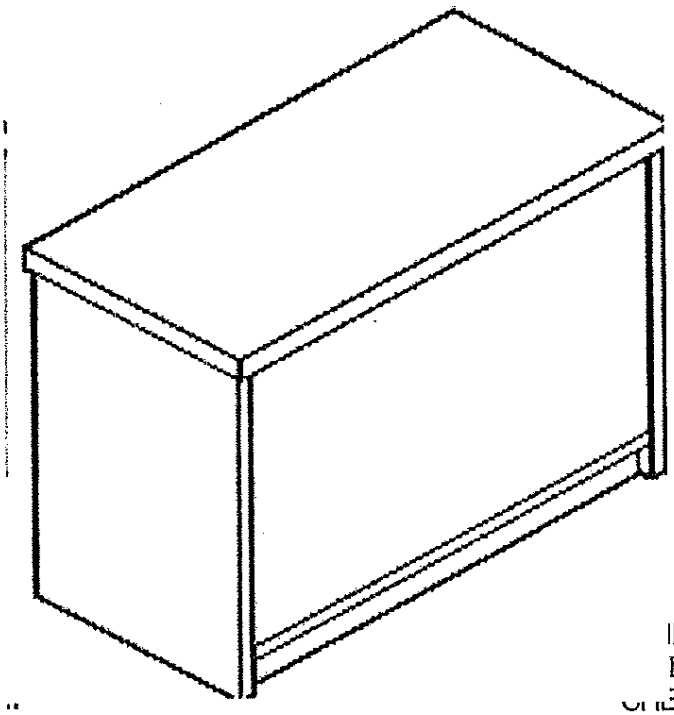

INCLUDE:
DRAWERS
CHECK WIRITING LEDGE 8" DEEP
WRITING SURFACE TO BE AT 30" HIGH
INCLUDE ONE WIRE GROMMET
INSTALLED IN FIELD
HEAVY DUTY CASTERS
ONE ADJUSTABLE SHELF PER CAVITY -
HOLES AND PINS SUPPORT

Item Description: SERVICE COUNTER

Client: CCRI

Project: Bookstore-Lincoln

Item Identifier: A.7

Height: 36
Width: 60
Depth: 24
Finish: SAHARA
Quantity: 1
spec by: FFI

Fixture Specification

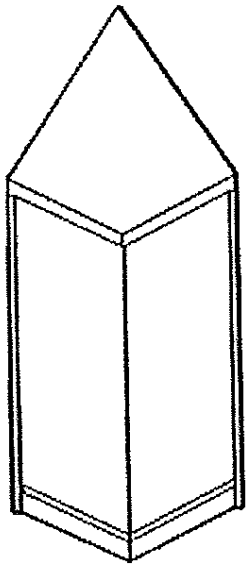

TO INCLUDE:
TWO WIRE PASSTHROUGH NOTCHES

Item Description: FORTY FIVE DEGREE CORNER COUNTER

Client: CCRI

Project: Bookstore-Lincoln

Item Identifier: A.8 & A.8a

Height: 42
Width: 30
Depth: 30
Finish: SAHARA
Quantity: 1 EA- A.8a 2 - A 8
spec by: FFI

Fixture Specification

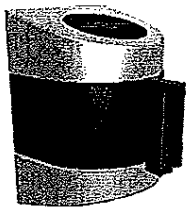

TO INCLUDE:
2 - TENSATOR #897 WALL MOUNT
TENSABARRIER - BLACK W/BLACK TAPE

2 - TENSATOR #898 WALL RECEIVER - BLACK

Item Description: CROWD CONTROL TAPE

Client: CCRI

Project: Bookstore-Lincoln

Item Identifier: A.9

Height: _____
Width: _____
Depth: _____
Finish:
Quantity: 2
spec by: FFI

Fixture Specification

PROVIDE:
1 SHEET OAK MELAMINE 96"HIGH X 48" WIDE - 3"OC
NECESSARY BLOCKING TO INSTALL SLATWALL AT NOTED B.1 LOCATIONS
1 - SLATWALL TRIM 4" HIGH X 96" WIDE - EB ONE LONG END
1 - SLATWALL TRIM 96" HIGH X 1.5" WIDE X .75" DEEP - EB ONE LONG END

SLATWALL W/METAL INSERTS/TRIM

	Project: Bookstore	Item Identifier: B.1
	Community College of Rhode Island Lincoln, RI	Height: 96 Width: 48 Depth: .75 Finish: MELAMINE Quantity: 1

Fixture Specification

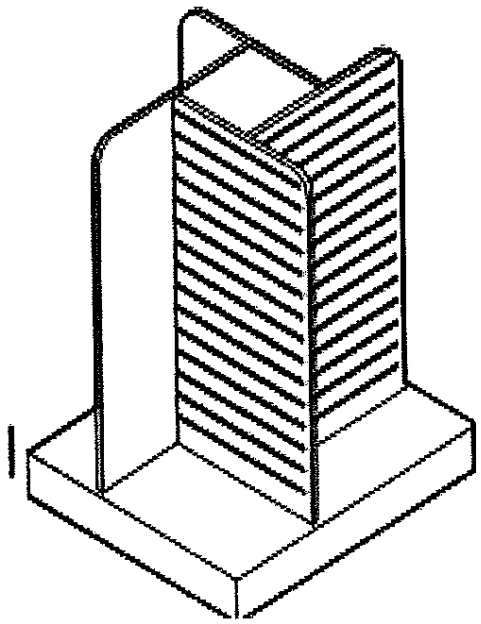

INCLUDE:
HEAVY DUTY CASTERS
NATURAL ALUMINUM INSERTS IN ALL SLATWALL
30 - CHROME 6" SLATWALL HOOKS
4 - ALMOND DURON SHELVES W/BULLNOSE FRONT
& CLOSED BOTTOM - 13"D X 24"W
8 - CHROME SLATWALL SHELF BRACKETS-12"

SLATWALL FOUR WAY W/ACCESSORIES

	Project: Bookstore	Item Identifier: B.2
	Community College of Rhode Island Lincoln, RI	Height: 54 Width: 36 Depth: 36 Finish: MELAMINE Quantity: 2

Fixture Specification

SLATWALL THIS SIDE WITH NATURAL ALUMINUM INSERTS- MELAMINE FINISH

PROVIDE:
- 1 - 16" DEEP FLAT SHELF
- 2 - 14" DEEP FLAT SHELVES
- 2 - 12" DEEP FLAT SHELVES
- 2 - 48" W X 3" H WIRE SHELF FRONT
- 6 - 14" W X 3" H WIRE DIVIDERS
- 6 - 12" W X 3" H WIRE DIVIDERS
- 1 - DELUXE CANOPY FLANGE

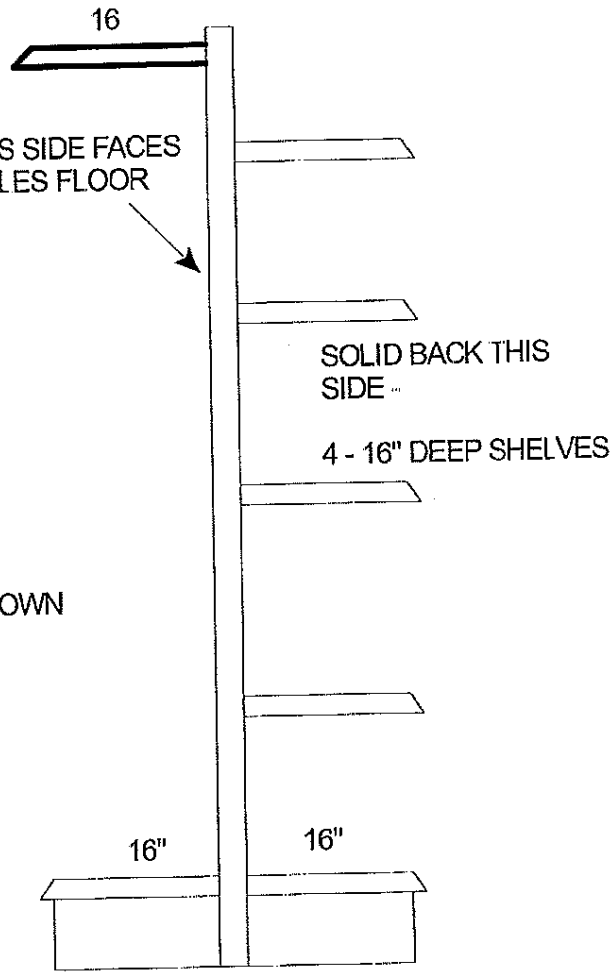

48" CORNICE W/SIGN TRACK TO INCLUDE:
- L SHAPE CORNICE (OAK MELAMINE) AS SHOWN
- FLIP BOLTS TO FASTEN
- SOLID WOOD SIGN TRACK

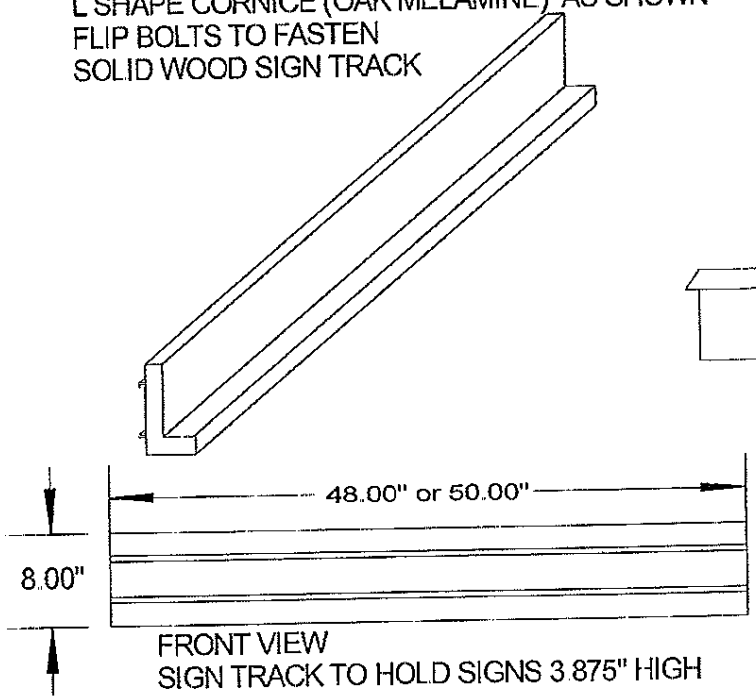

FRONT VIEW
SIGN TRACK TO HOLD SIGNS 3.875" HIGH

MADIX WALL UNIT - CONVENIENCE/STORAGE

	Project: Bookstore	Item Identifier: C.1
	Community College of Rhode Island Lincoln, RI	Height: 84 Width: 36 Depth: 35 Finish: SAHARA Quantity: 2

Fixture Specification

ALL CONNECTORS TO BE CONCEALED

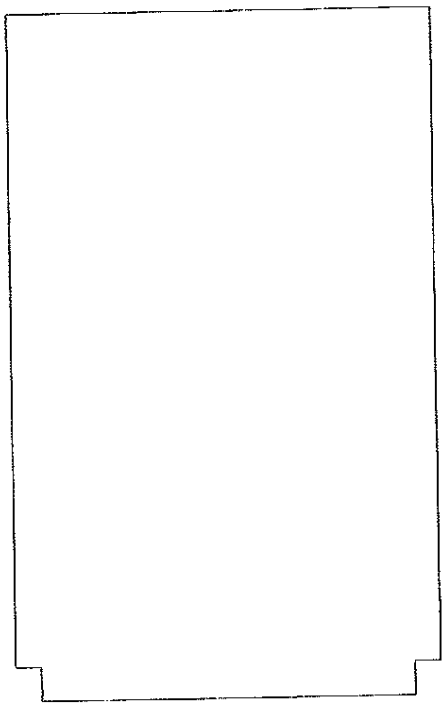

GONDOLA END PANEL

	Project: Bookstore	Item Identifier: C.2
	Community College of Rhode Island Lincoln, RI	Height: 85 Width: 36 Depth: .75 Finish: MELAMINE Quantity: 2

Fixture Specification

Provide:
Madix steel wall section
solid back
shelves as shown

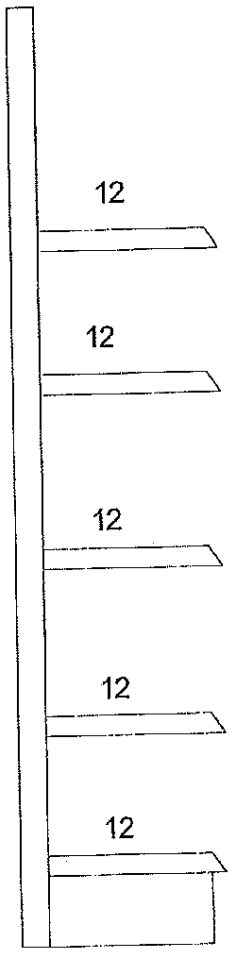

Madix steel shelf wall unit	Project	Item Identifier: D 1
	Community College of Rhode Island Lincoln, RI	Height: 84 Width: 36 Depth: 15 Finish: Sahara Quantity: 2

Fixture Specification

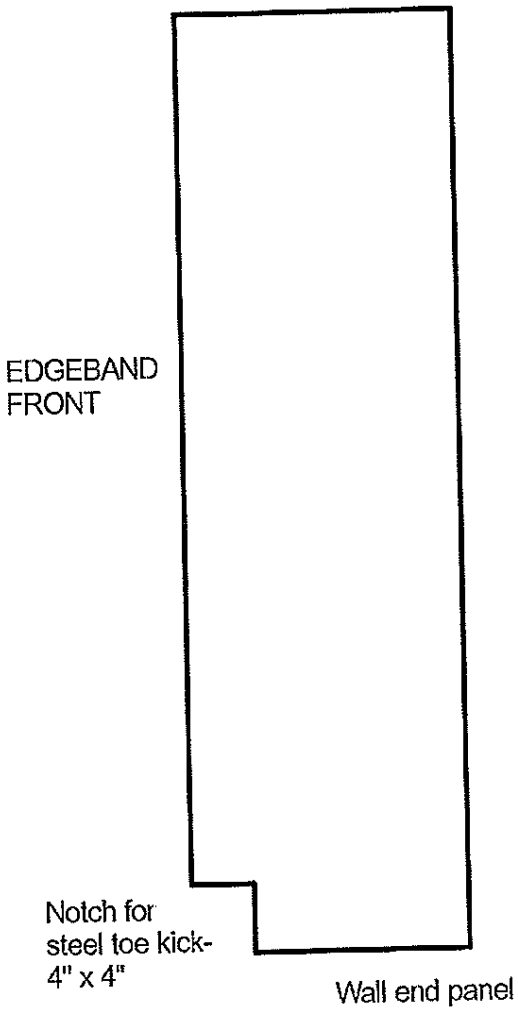

Material:	Project	Item Identifier: D.2
Natural Oak Melamine	Community College of Rhode Island Lincoln, RI	Height: 85 Width: 15 Depth: .75 Finish: Melamine Quantity: 2

Fixture Specification

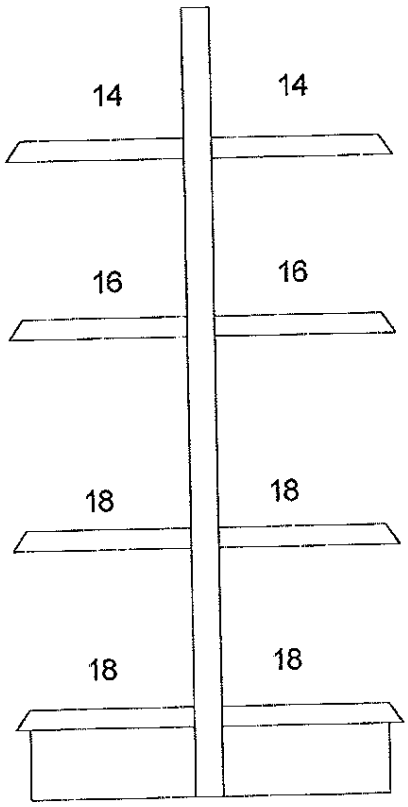

PROVIDE:
SLATWALL BACK W/METAL INSERTS
(OAK MELAMINE) EACH SIDE
SHELVES AS SHOWN
BACKS TO BE 54" HIGH
2-48" WIRE SHELF FRONT-3" HIGH
2-18" WIRE DIVIDERS-3"HIGH
2-16" WIRE DIVIDERS-3" HIGH
2-14" WIRE DIVIDERS-3" HIGH
MADIX HD CASTERS KIT WITH CASTERS
ALL NECESSARY SLATWALL SPANNERS

MADIX GONDOLA UNIT - SAHARA	Project: Bookstore	Item Identifier: F.1
	Community College of Rhode Island Lincoln, RI	Height: 54 Width: 48 Depth: 39 Finish: SAHARA Quantity: 12

Fixture Specification

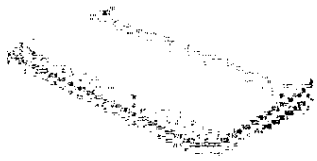

WRAPAROUND SHELF

UNIT TO INCLUDE:
SLATWALL BACK W/NATURAL ALUMINUM INSERTS
3" OC - FINISH-NATURAL OAK MELAMINE
1 - 12" DEEP WRAPAROUND CONTOUR SHELVES
1 - 4" X 42" SIGN HOLDER

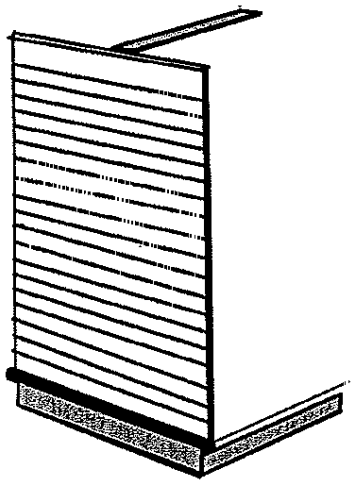

END FRAME (TYP)

Item Description: MADIX STEEL END FRAME W/SLATWALL BACK

Client: CCRI-Warwick **Project: Bookstore- Lincoln**

Item Identifier: F.2

Height: 54
Width: 42
Depth: 1.25
Finish: SAHARA
Quantity: 12
spec by: FFI

Fixture Specification

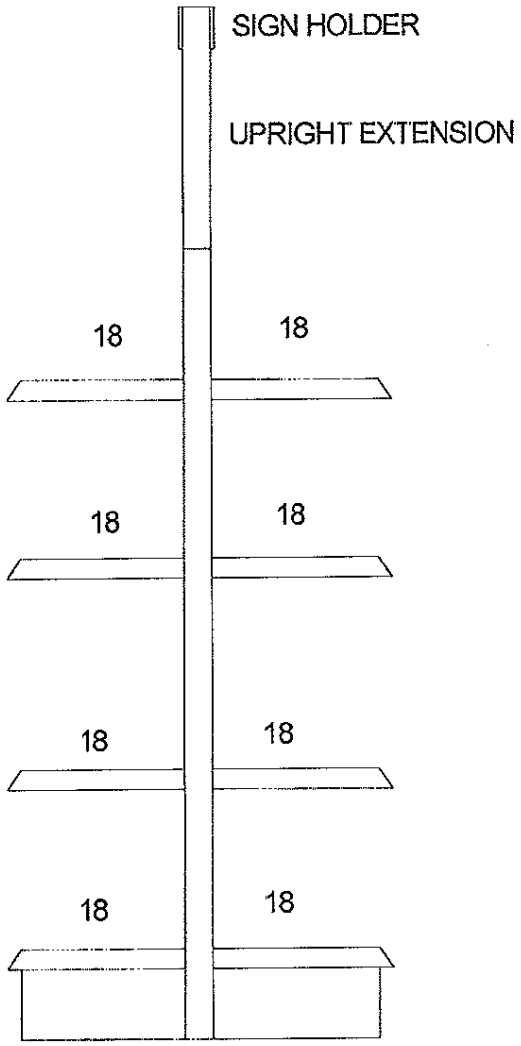

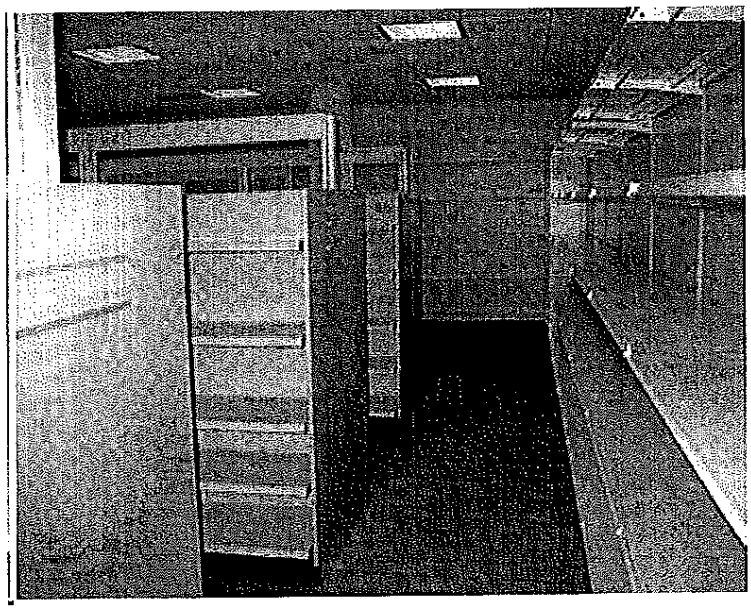

PICTURE IS REPRESENTATIVE OF MADIX GONDOLA WITH UPRIGHT EXTENSIONS & SIGNHOLDERS

PROVIDE:
SOLID BACK EACH SIDE
SHELVES AS SHOWN
BACKS TO BE 54" HIGH
1 - 24" EXTENSION UPRIGHT
2 - SIGN HOLDER 4"HIGH X 48" WIDE
2 - EXTENSION UPRIGHT COVERS 24" HIGH

MADIX GONDOLA UNIT - SAHARA	Project: Bookstore	Item Identifier: G.1
	Community College of Rhode Island Lincoln, RI	Height: 54 Width: 48 Depth: 39 Finish: SAHARA Quantity: 24

Fixture Specification

UNIT TO INCLUDE:

1 - 4" X 42" SIGN HOLDER

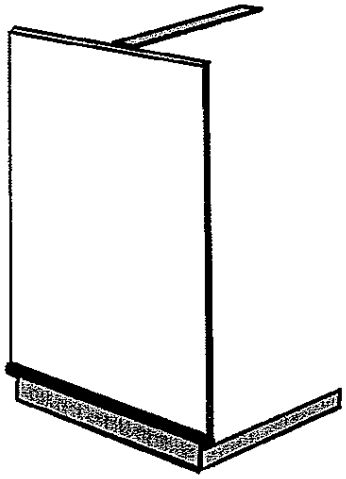

END FRAME (TYP)

Item Description: MADIX STEEL END FRAME W/SOLID BACKS

Client: CCRI

Project: Bookstore-Lincoln

Item Identifier: G3

Height: 54
Width: 42
Depth: 1.25
Finish: SAHARA
Quantity: 6
spec by: FFI

Fixture Specification

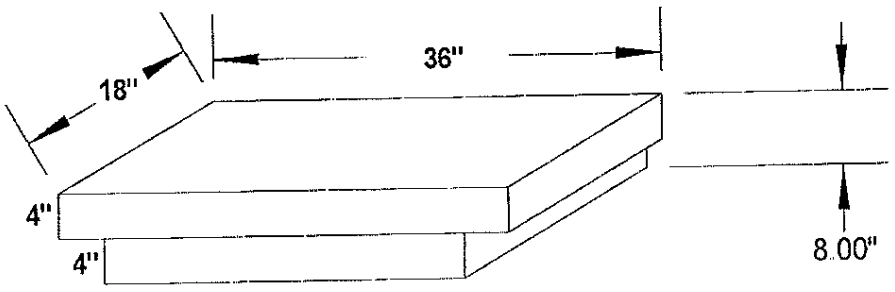

	Project: Bookstore	Item Identifier: G.4
	Community College of Rhode Island Lincoln, RI	Height: 8 Width: 36 Depth: 18 Finish: High Pressure Laminate Quantity: 6

Fixture Specification

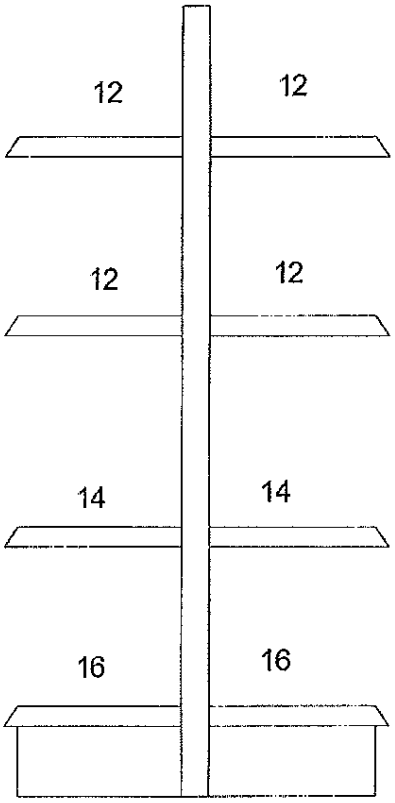

PROVIDE:
SLATWALL BACK W/METAL INSERTS
(OAK MELAMINE) EACH SIDE
SHELVES AS SHOWN
BACKS TO BE 54" HIGH
2-48" WIRE SHELF FRONT-3" HIGH
2-12" WIRE DIVIDERS-3" HIGH
2-14" WIRE DIVIDERS-3" HIGH
MADIX HD CASTERS KIT WITH CASTERS
ALL NECESSARY SLATWALL SPANNERS

MADIX GONDOLA UNIT - SAHARA	Project: Bookstore	Item Identifier: S.1
	Community College of Rhode Island Lincoln, RI	Height: 54 Width: 48 Depth: 35 Finish: SAHARA Quantity: 6

Fixture Specification

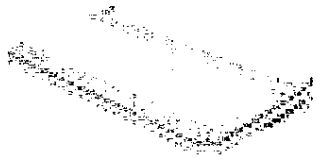

WRAPAROUND SHELF

UNIT TO INCLUDE:
SLATWALL BACK W/NATURAL ALUMINUM INSERTS
3" OC - FINISH-NATURAL OAK MELAMINE
1 - 12" DEEP WRAPAROUND CONTOUR SHELVES
1 - 4" X 42" SIGN HOLDER

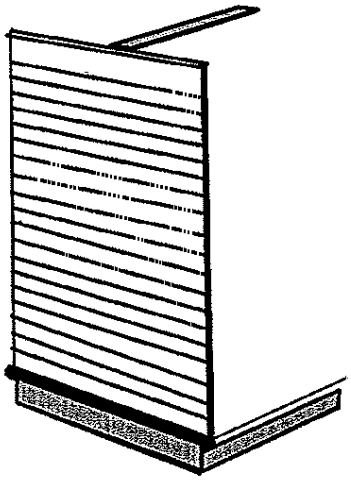

END FRAME (TYP)

Item Description: MADIX STEEL END FRAME W/SLATWALL BACK

Client: CCRI-Warwick **Project: Bookstore- Lincoln**

Item Identifier: S.2

Height: 54
Width: 36
Depth: 1.25
Finish: SAHARA
Quantity: 6
spec by: FFI

Fixture Specification

Provide:
Madix steel wall section
solid back
shelves as shown
deluxe canopy flange

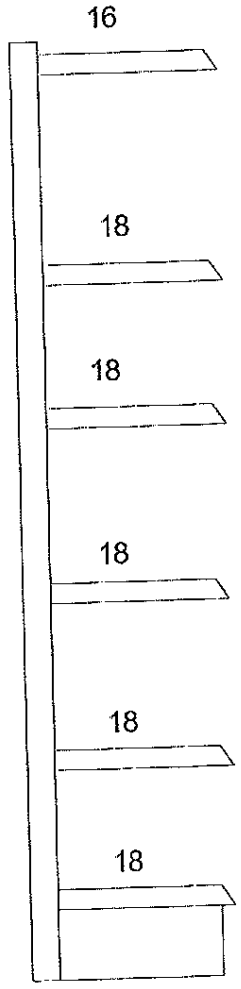

48" CORNICE W/SIGN TRACK
TO INCLUDE:
L SHAPE CORNICE (OAK MELAMINE) AS SHOWN
FLIP BOLTS TO FASTEN
SOLID WOOD SIGN TRACK

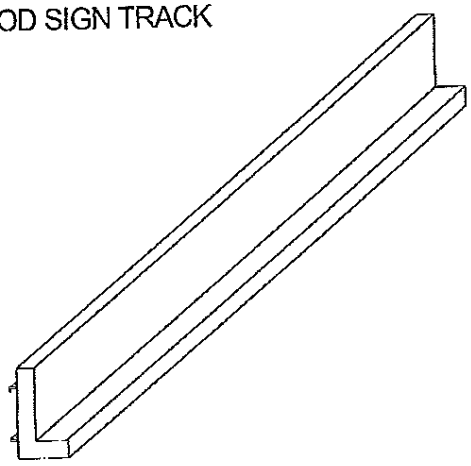

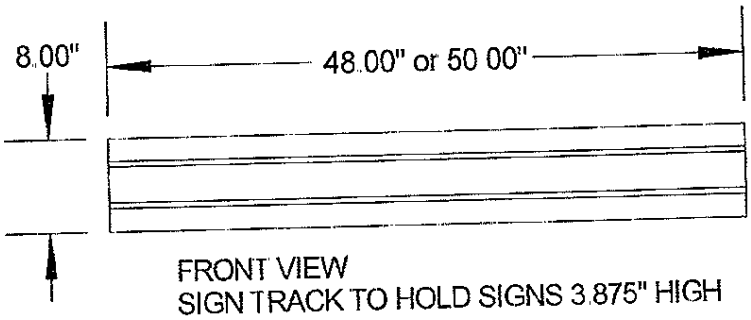

FRONT VIEW
SIGN TRACK TO HOLD SIGNS 3.875" HIGH

Madix steel shelf wall unit	Project Community College of Rhode Island Lincoln, RI	Item Identifier: T 1 Height: 84 Width: 48 Depth: 21 Finish: Sahara Quantity: 8

Fixture Specification

Provide:
Madix steel wall section
solid back
shelves as shown

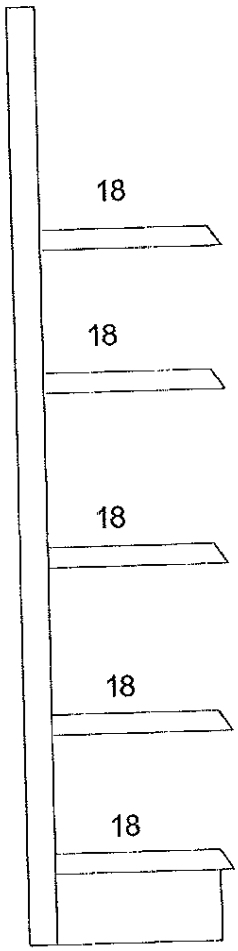

Madix steel shelf wall unit	Project	Item Identifier: T.1a
	Community College of Rhode Island Lincoln, RI	Height: 84 Width: 48 Depth: 21 Finish: Sahara Quantity: 4

Fixture Specification

Provide:
Madix steel wall section
solid back
shelves as shown
deluxe canopy flange

48" CORNICE W/SIGN TRACK
TO INCLUDE:
L SHAPE CORNICE (OAK MELAMINE) AS SHOWN
FLIP BOLTS TO FASTEN
SOLID WOOD SIGN TRACK

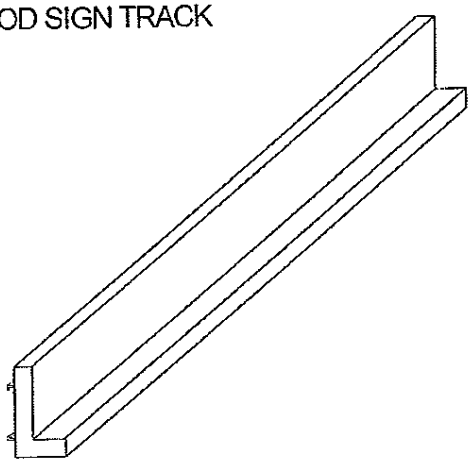

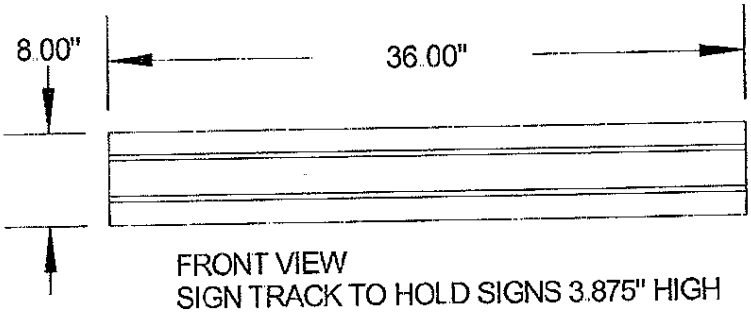

FRONT VIEW
SIGN TRACK TO HOLD SIGNS 3.875" HIGH

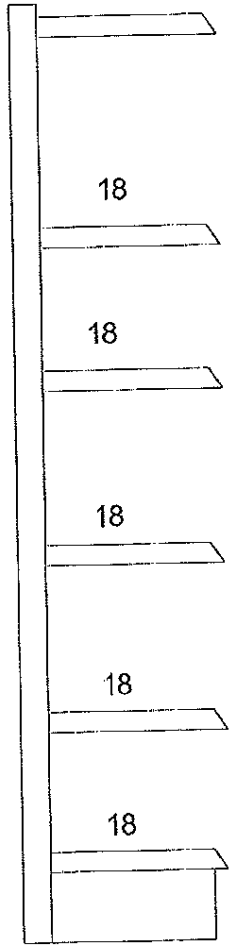

Madix steel shelf wall unit	Project Community College of Rhode Island Lincoln, RI	Item Identifier: T.2 Height: 84 Width: 36 Depth: 21 Finish: Sahara Quantity: 5

Fixture Specification

PROVIDE:
- 2 - SOLID BACKS
- 5 - 16" DEEP FLAT SHELVES
- 4 - 18" DEEP FLAT SHELVES
- 1 - DELUXE CANOPY FLANGE

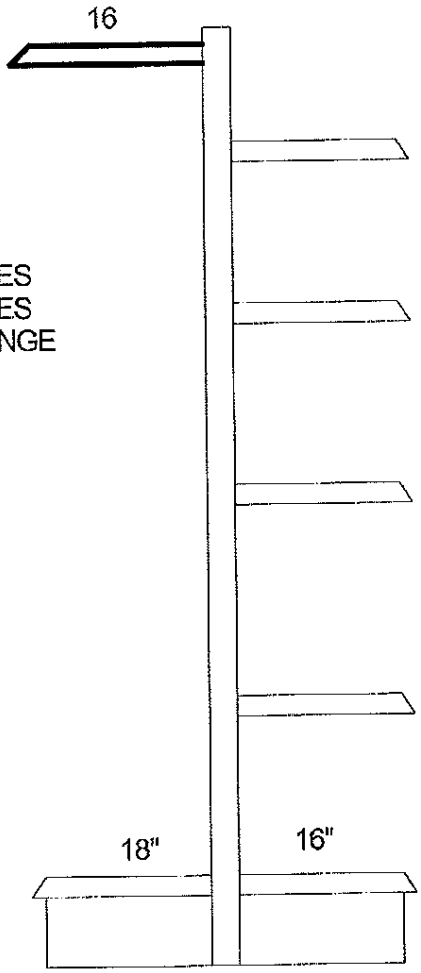

SOLID BACK THIS SIDE -

4 - 16" DEEP SHELVES

MADIX WALL UNIT - CLOTHING/STORAGE

	Project: Bookstore	Item Identifier: T.3
	Community College of Rhode Island Lincoln, RI	Height: 84 Width: 48 Depth: 35 Finish: SAHARA Quantity: 7

Fixture Specification

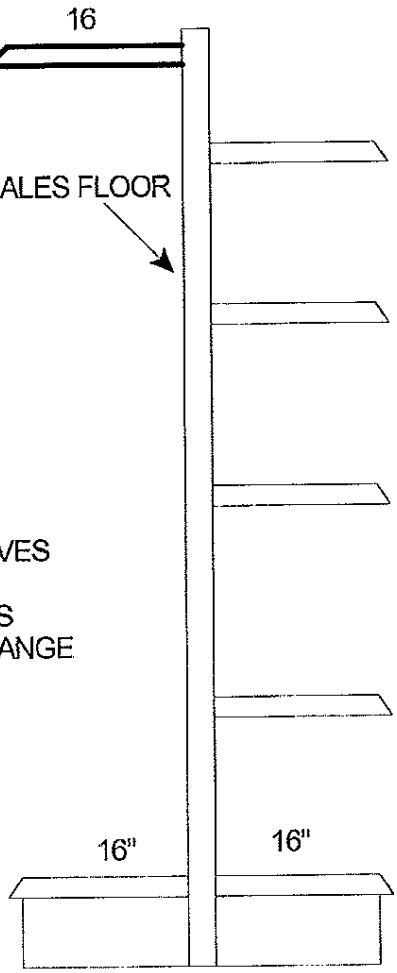

SLATWALL THIS SIDE WITH NATURAL ALUMINUM INSERTS- MELAMINE FINISH

PROVIDE:
- 5 - 16" DEEP FLAT SHELVES
- 4 - 10" DEEP UPSLANT MADIX BOOKSHELVES
- 1 - DELUXE CANOPY FLANGE

SOLID BACK THIS SIDE -

4 - 16" DEEP SHELVES

MADIX WALL UNIT - CLOTHING/STORAGE

	Project: Bookstore	Item Identifier: T.3a
	Community College of Rhode Island Lincoln, RI	Height: 84 Width: 48 Depth: 35 Finish: SAHARA Quantity: 2

Fixture Specification

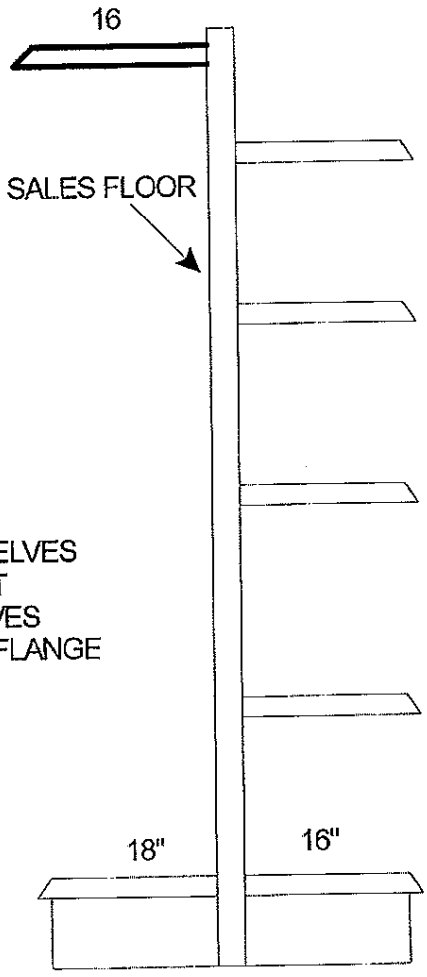

SLATWALL THIS SIDE WITH NATURAL ALUMINUM INSERTS- MELAMINE FINISH

PROVIDE:
- 5 - 16" DEEP FLAT SHELVES
- 4 - 10" DEEP UPSLANT MADIX BOOKSHELVES
- 1 - DELUXE CANOPY FLANGE

SOLID BACK THIS SIDE -

4 - 16" DEEP SHELVES

MADIX WALL UNIT - REFERENCE/STORAGE

	Project: Bookstore	Item Identifier: T.3a
	Community College of Rhode Island Lincoln, RI	Height: 84 Width: 48 Depth: 37 Finish: SAHARA Quantity: 2

Fixture Specification

PROVIDE:
- 2 - SOLID BACKS
- 5 - 16" DEEP FLAT SHELVES
- 4 - 18" DEEP FLAT SHELVES
- 1 - DELUXE CANOPY FLANGE

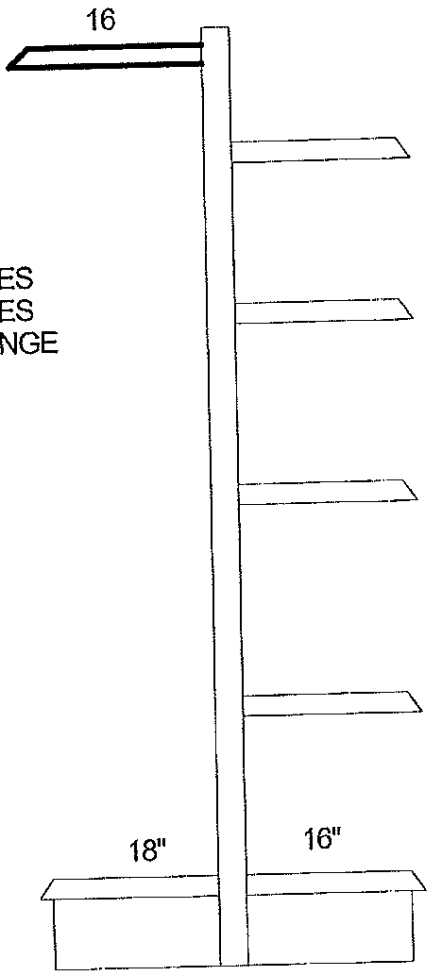

SOLID BACK THIS SIDE -

4 - 16" DEEP SHELVES

MADIX WALL UNIT - TEXT/STORAGE

	Project: Bookstore	Item Identifier: T.4
	Community College of Rhode Island Lincoln, RI	Height: 84 Width: 36 Depth: 35 Finish: SAHARA Quantity: 1

Fixture Specification

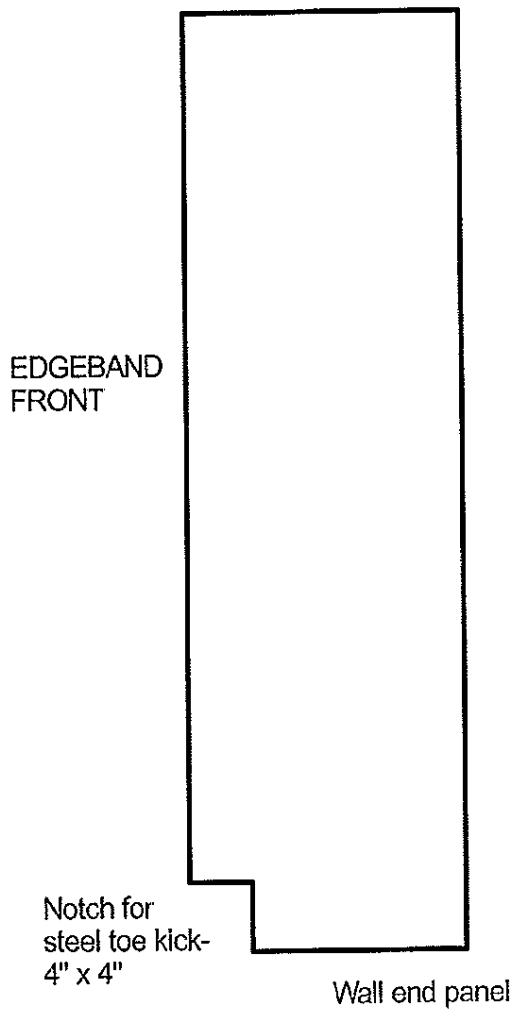

Material:	Project	Item Identifier: T5
Natural Oak Melamine	Community College of Rhode Island Lincoln, RI	Height: 85 Width: 22 Depth: .75 Finish: Melamine Quantity: 7

Fixture Specification

All connectors must be concealed

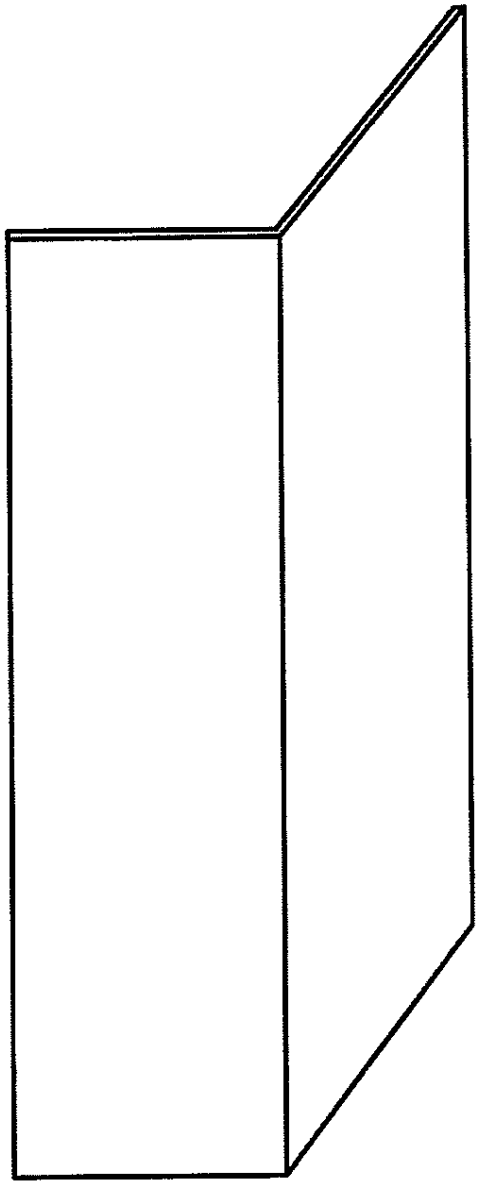

Corner column kit

Material: Oak Melamine	Project Community College of Rhode Island Lincoln, RI	Item Identifier: T.6 Height: 85 Width: 23.5 Depth: 23.5 Finish: Melamine Quantity: 2

Fixture Specification

ALL CONNECTORS TO BE CONCEALED

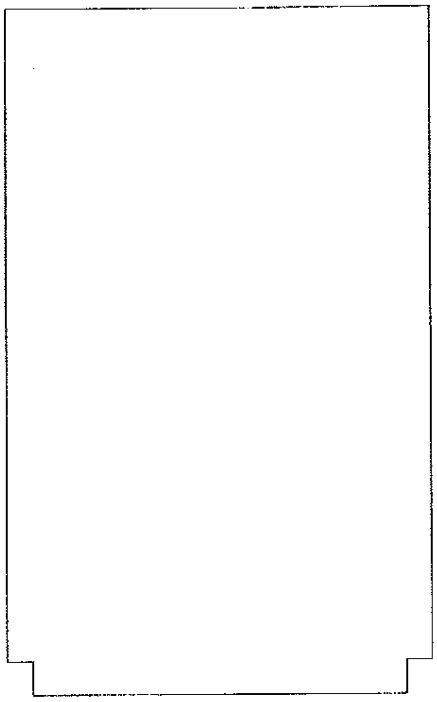

GONDOLA END PANEL

	Project: Bookstore	Item Identifier: T.7
	Community College of Rhode Island Lincoln, RI	Height: 85 Width: 38 Depth: .75 Finish: MELAMINE Quantity: 7

Fixture Specification

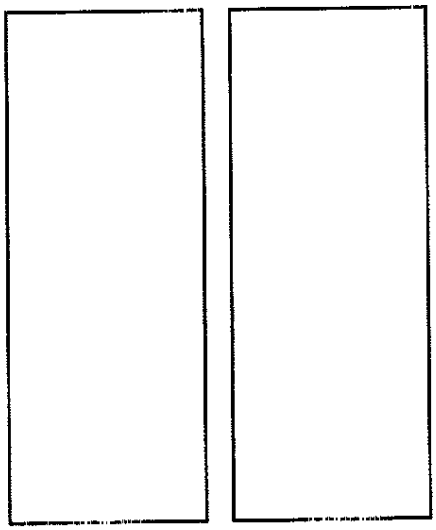

GATE - INCLUDE HEAVY DUTY TWO WAY SWING HINGES

	Project: Bookstore	Item Identifier: T.8
	Community College of Rhode Island Lincoln, RI	Height: 48 Width: 17 (PER SIDE) Depth: .75 Finish: MELAMINE Quantity: 1

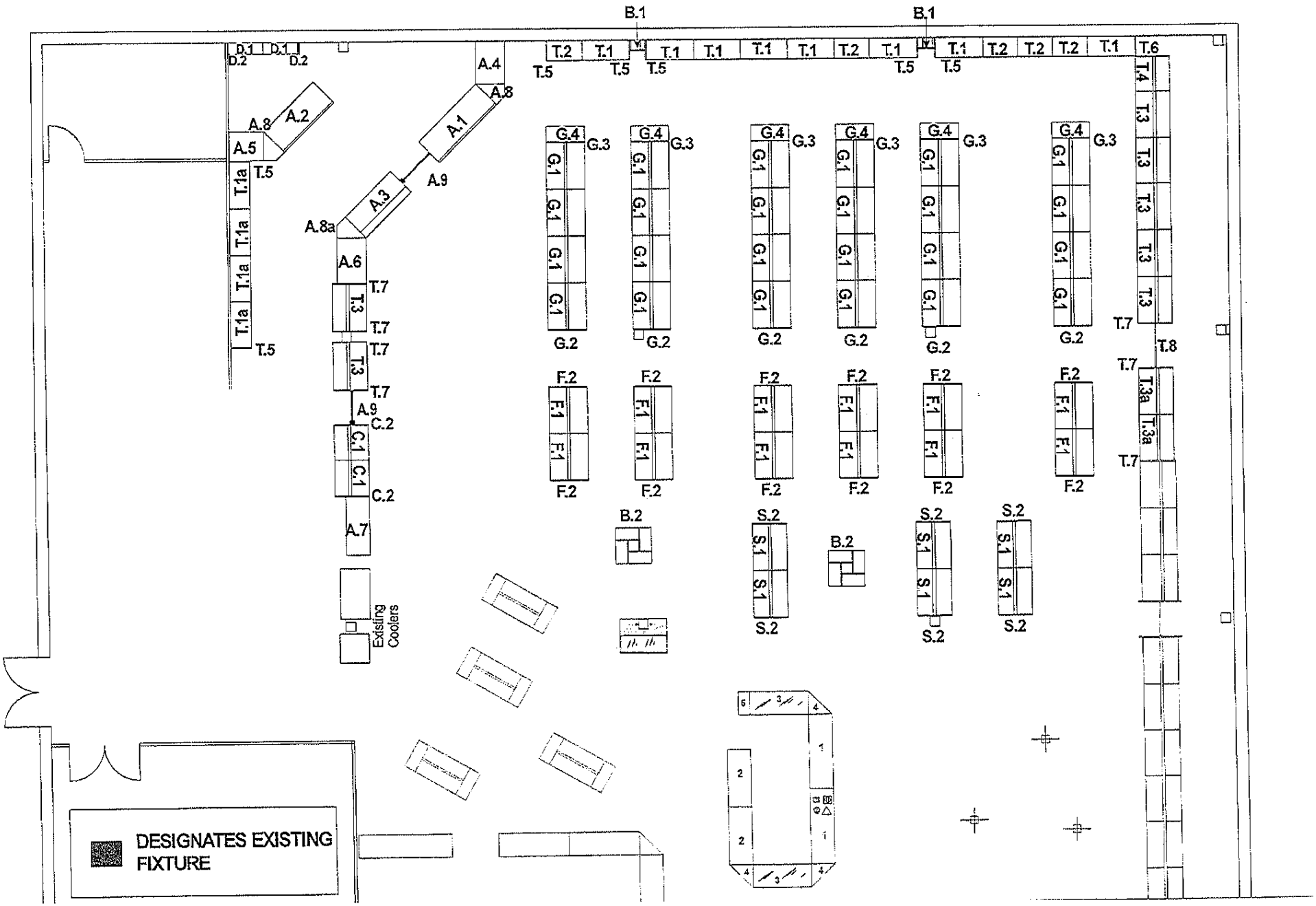

B.1
B.1
D.1
D.1
D.2
D.2
A.4
A.8
A.8
A.2
A.5
T.5
T.1a
T.1a
T.1a
T.1a
T.5
A.1
A.9
A.3
A.8a
A.6
T.7
T.3
T.7
T.7
T.3
T.7
A.9
C.2
C.1
C.1
C.2
A.7
Existing Coolers
T.2
T.1
T.5
T.5
T.1
T.1
T.1
T.1
T.2
T.1
T.5
T.5
T.1
T.2
T.2
T.2
T.1
T.6
T.4
T.3
T.3
T.3
T.3
T.3
T.7
T.8
T.7
T.3a
T.3a
T.7
G.4
G.3
G.1
G.2
F.2
F.1
B.2
S.2
S.1
DESIGNATES EXISTING FIXTURE

Demolition, Installation & Fixture Specifications
Commuity College of Rhode Island
All Bookstore Locations

Community College of Rhode Island-Bookstore Fixtures

Pre Bid Worksite visit:

It is stronlgly recommended that interested bidder visit each worksite to review demolition conditions, load in logistics, contractor access and field measurements. Fixture contractor will be totally responsible for all site dimensions, mechanical locations, electrical locations and field conditions.

General Fixture Specifications:

A] Counters

1] All fixtures are to be priced in standard color melamine on mdf.
2] All countertops are to be standard grade High Pressure Laminate from Formica, Wilsonart or Pionite
3] All countertops are to be particleboard substrate 1.125" thick.
4] All counters are to be part of a modular counter system.
5] All connecters are to be hidden if possible
6] All panels and mid panels on counters are to be notched for electrical access as noted on spec sheets
7] All access panels specefied are to be removable from base shelf and match finish
8] All grommets are to be 2" black plastic
9] Light in showcase to include ballast in base for electrical connection.
10] All counters are to be installed, leveled and connected per plan with concealed connectors
11] All counter cavities are to have one adjustable shelf with holes and pins shelf support

Delolition Notes:

1] All electrical disconnect and reconnect is provided by owner's electrical contractor
2] All demolished material will be disposed of by owner. Move within building per owners instructions
3] Demolition is to take place in designated areas only. There is to be no storage of debris in the store sales area.
4] All areas under demolition must be protected and all effort is to be taken to prohibit public access

Installation Notes:

1] All installation to be done by trained store fixture installers. Additional labor is to be determined by fixture contractor. All labor must be covered by workmans compensation and liability insurance. Proof of insurance is to be made available to owner.
2] Area under demolition and fixture installation to be protected from public access.
3] All work is to be performed according to state and local building codes

DEMOLITION PLAN
COMMUNITY OF RHODE ISLAND
BOOKSTORE - LINCOLN

3/29/2012

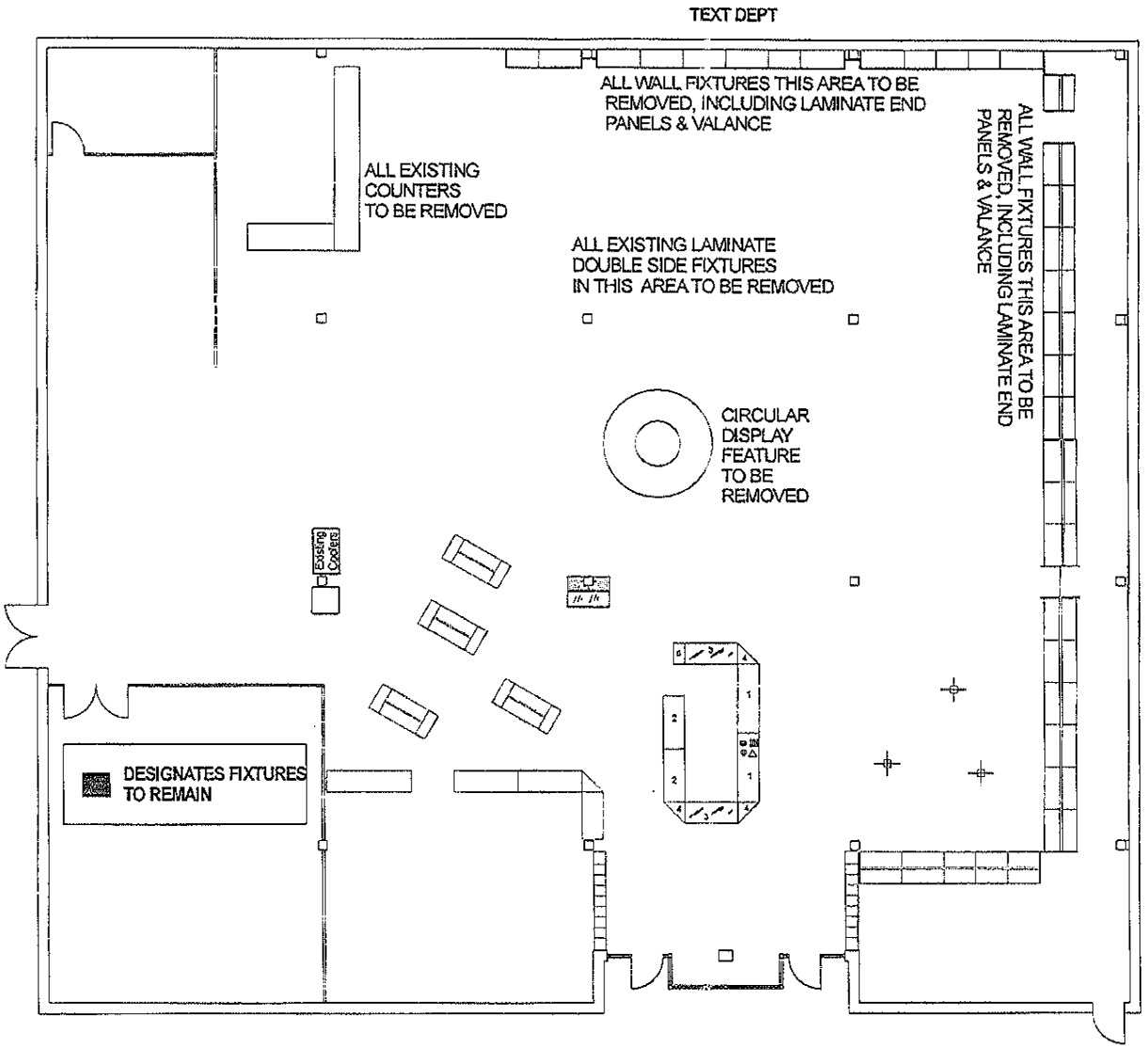

Fixture Specification

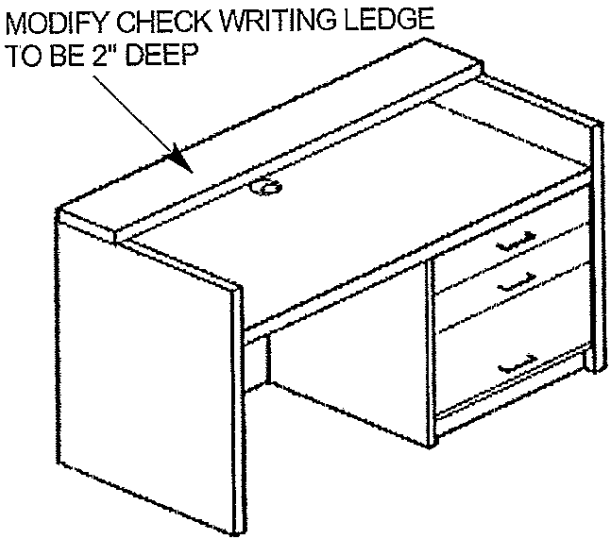

TO INCLUDE:
DRAWERS RIGHT (LETTER SIZE
FILE DRAWER & TWO EQUAL
SIZE SMALLER DRAWERS
CHECK WIRITING LEDGE 2" DEEP
WRITING SURFACE TO BE AT 30" HIGH
INCLUDE TWO WIRE GROMMETS
INSTALLED IN FIELD

Item Description: TEXT INFO COUNTER W/MODIFIED CHECK WRITING LEDGE

Client: CCRI

Project: Bookstore-Warwick

Item Identifier: C.1

Height: 42
Width: 84
Depth: 30
Finish: SAHARA
Quantity: 1
spec by: FFI

Fixture Specification

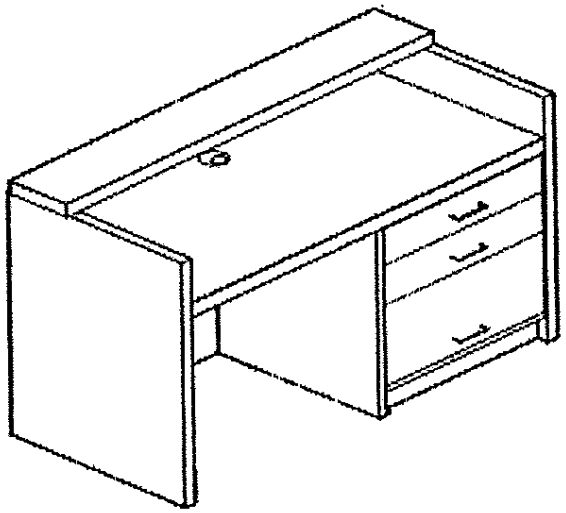

TO INCLUDE:
DRAWERS RIGHT (LETTER SIZE
FILE DRAWER & TWO EQUAL
SIZE SMALLER DRAWERS
CHECK WIRITING LEDGE 9" DEEP
WRITING SURFACE TO BE AT 30" HIGH
INCLUDE TWO WIRE GROMMETS
INSTALLED IN FIELD

Item Description: TEXT INFO COUNTER W/FULL DEPTH CHECK WRITING LEDGE

Client: CCRI

Project: Bookstore-Warwick

Item Identifier: C.2

Height: 42
Width: 96
Depth: 30
Finish: SAHARA
Quantity: 1
spec by: FFI

Fixture Specification

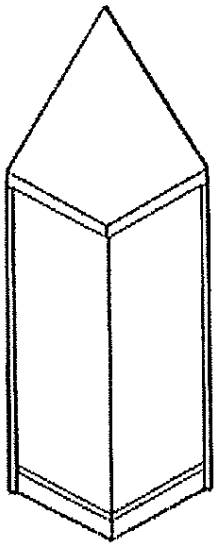

NOTCH TWO SIDES FOR WIRE PASSTHROUGH

Item Description: FORTY FIVE DEGREE CORNER COUNTER

Client: CCRI

Project: Bookstore-Warwick

Item Identifier: C.3

Height: 42
Width: 30
Depth: 30
Finish: SAHARA
Quantity: 1
spec by: FFI

Fixture Specification

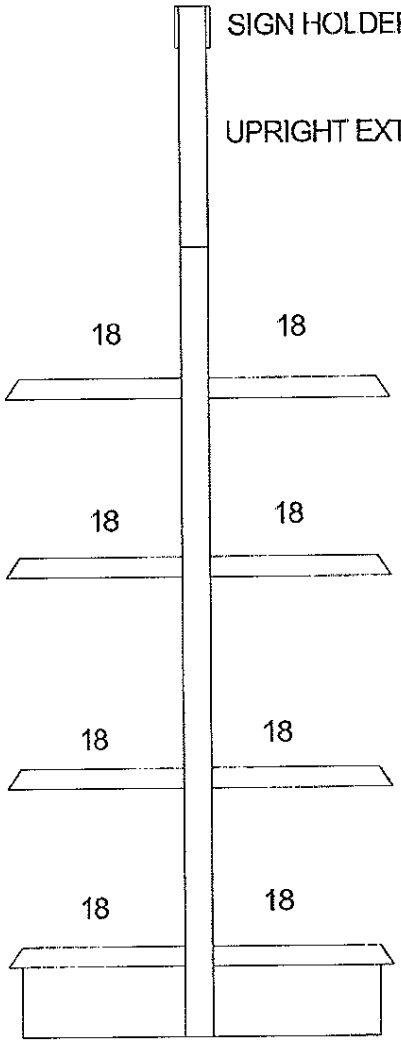

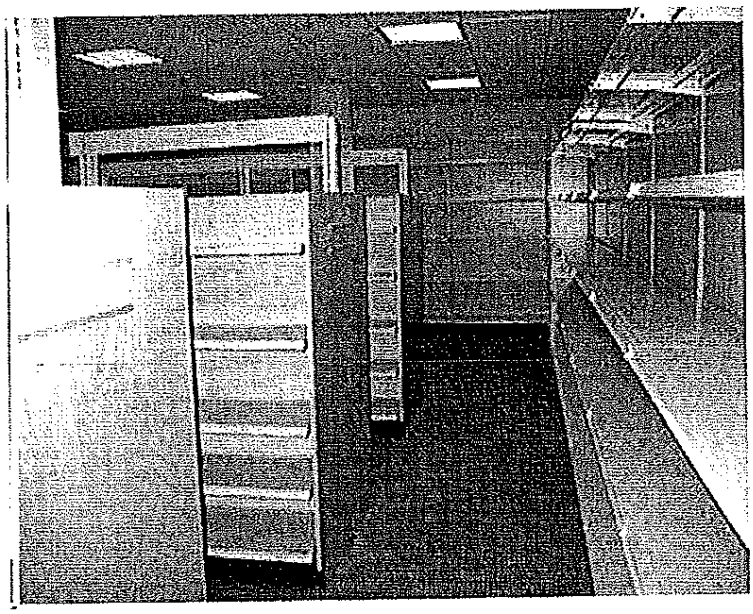

PICTURE IS REPRESENTATIVE OF MADIX GONDOLA WITH UPRIGHT EXTENSIONS & SIGNHOLDERS

PROVIDE:
SOLID BACK EACH SIDE
SHELVES AS SHOWN
BACKS TO BE 54" HIGH
1 - 24" EXTENSION UPRIGHT
2 - SIGN HOLDER -4"HIGH X 48" WIDE
2 - EXTENSION UPRIGHT COVERS-24" HIGH

MADIX GONDOLA UNIT - SAHARA	Project: Bookstore	Item Identifier: G.1
	Community College of Rhode Island Warwick, RI	Height: 54 Width: 48 Depth: 39 Finish: SAHARA Quantity: 14

Fixture Specification

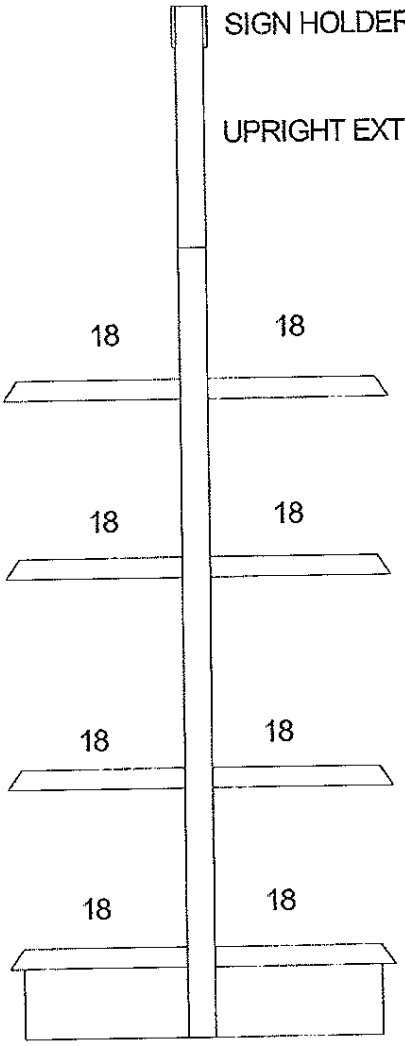

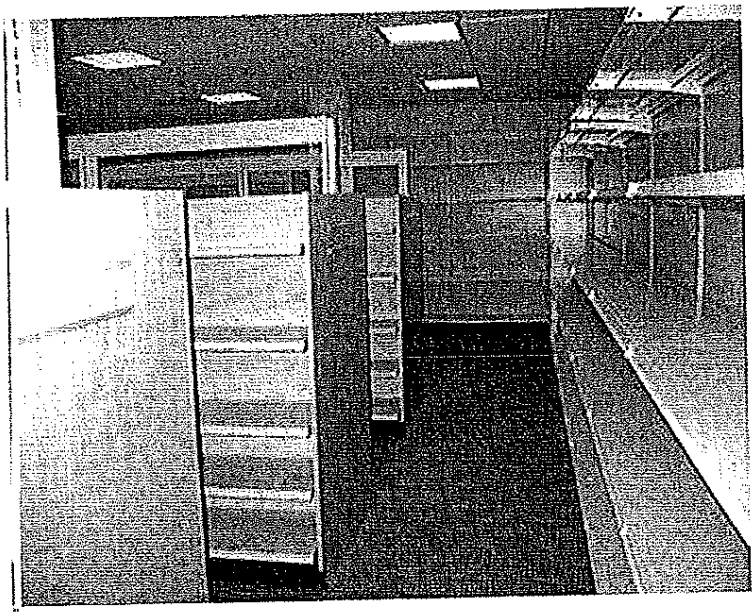

PICTURE IS REPRESENTATIVE OF MADIX GONDOLA WITH UPRIGHT EXTENSIONS & SIGNHOLDERS

PROVIDE:
SOLID BACK EACH SIDE
SHELVES AS SHOWN
BACKS TO BE 54" HIGH
1 - 24" EXTENSION UPRIGHT
2 - SIGN HOLDER -4"HIGH X 36" WIDE
2 - EXTENSION UPRIGHT COVERS-24" HIGH

MADIX GONDOLA UNIT - SAHARA	Project: Bookstore Community College of Rhode Island Warwick, RI	Item Identifier: G.2 Height: 54 Width: 36 Depth: 3 Finish: SAHARA Quantity: 10

Fixture Specification

WRAPAROUND SHELF

UNIT TO INCLUDE:

1 - 4" X 42" SIGN HOLDER

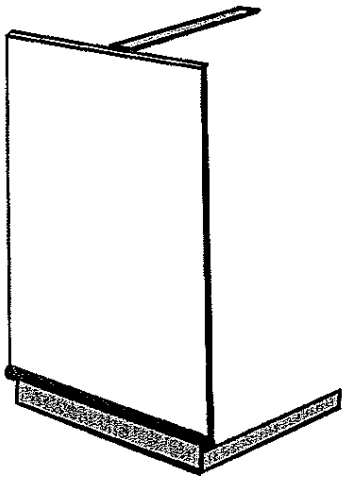

END FRAME (TYP)

Item Description: MADIX STEEL END FRAME W/SOLID BACKS

Client: CCRI

Project: Bookstore-Warwick

Item Identifier: G.3

Height: 54
Width: 42
Depth: 1.25
Finish: SAHARA
Quantity: 8
spec by: FFI

Fixture Specification

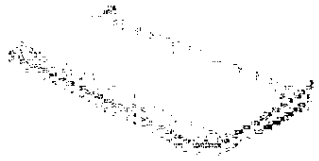

WRAPAROUND SHELF

UNIT TO INCLUDE:
SLATWALL BACK W/NATURAL ALUMINUM INSERTS
3" OC - FINISH-NATURAL OAK MELAMINE
2 - 12" DEEP WRAPAROUND CONTOUR SHELVES
1 - 4" X 42" SIGN HOLDER

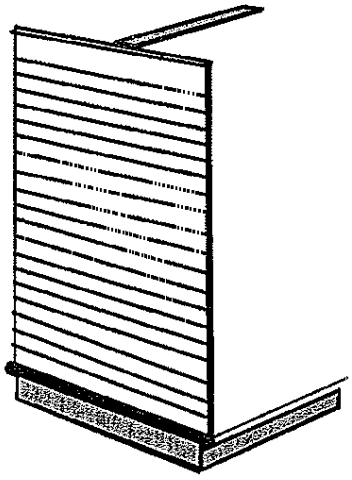

END FRAME (TYP)

Item Description: MADIX STEEL END FRAME W/SLATWALL BACK

Client: CCRI-Warwick **Project: Bookstore- Warwick**

Item Identifier: G.3a

Height: 54
Width: 42
Depth: 1.25
Finish: SAHARA
Quantity: 6
spec by: FFI

Fixture Specification

UNIT TO INCLUDE:
SLATWALL BACK W/NATURAL ALUMINUM INSERTS
3" OC - FINISH-NATURAL OAK MELAMINE
1 - 4" X 42" SIGN HOLDER

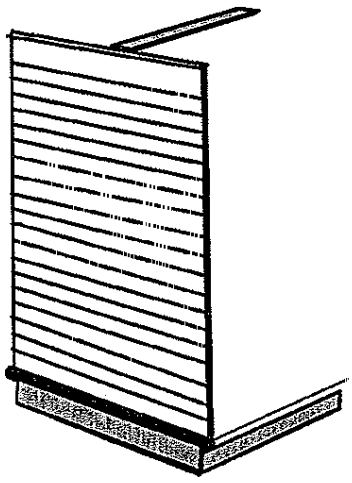

END FRAME (TYP)

Item Description: MADIX STEEL END FRAME W/SLATWALL BACK

Client: CCRI-Warwick **Project: Bookstore- Warwick**

Item Identifier: G 3b

Height: 54
Width: 42
Depth: 1.25
Finish: SAHARA
Quantity: 2
spec by: FFI

Fixture Specification

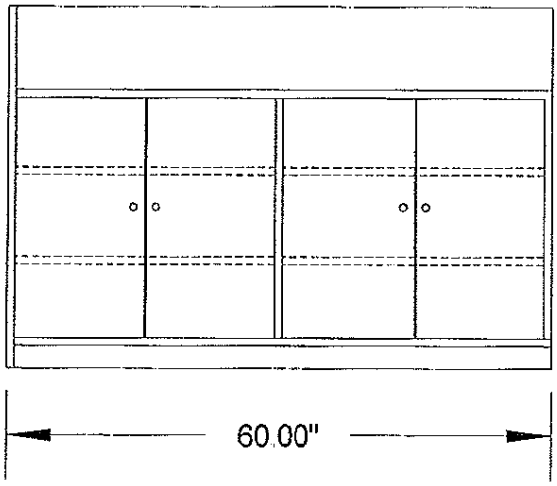

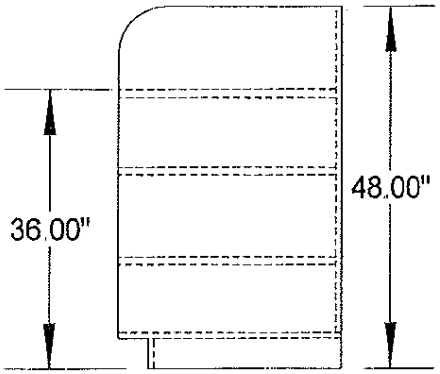

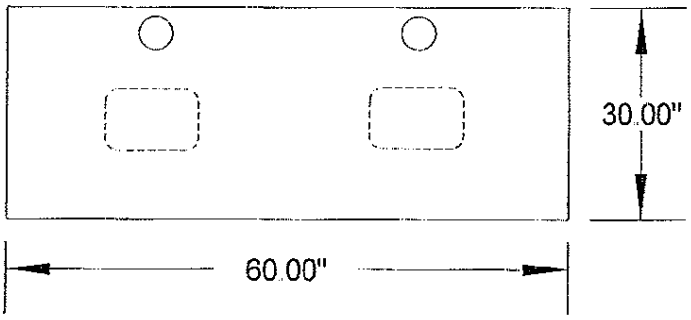

TO INCLUDE:
TWO SETS HINGED DOORS
TWO ACCESS PANELS AS SHOWN
TWO WIRE GROMMETS INSTALLED IN FIELD
LAMINATE WRITING SURFACE - 1.125" THICK

Item Description: TEXT INFO KIOSK

Client: CCRI

Project: Bookstore-Warwick

Item Identifier: K.1

Height: 48
Width: 60
Depth: 30
Finish: OAK MELAMINE
Quantity: 1
spec by: FFI

Fixture Specification

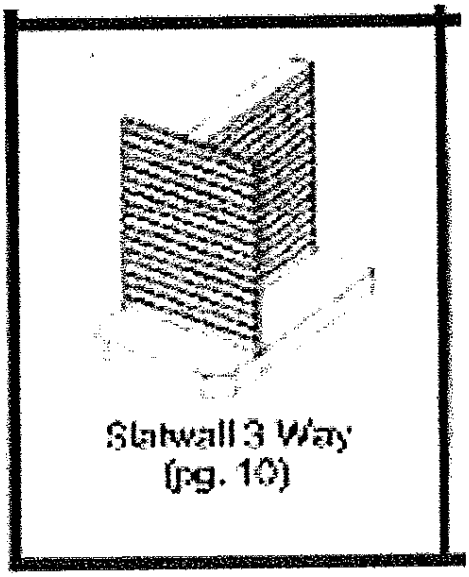

INCLUDE:
ALL SLATWALL TO HAVE NATURAL ALUMINUM INSERTS
SLATWALL 3" OC
HEAVY DUTY CASTERS

Item Description: SLATWALL THREE WAY ON CASTERS

Client: CCRI

Project: Bookstore-Warwick

Item Identifier: SW.1

Height: 54
Width: 48
Depth: 36
Finish: OAK MELAMINE
Quantity: 1
spec by: FFI

Fixture Specification

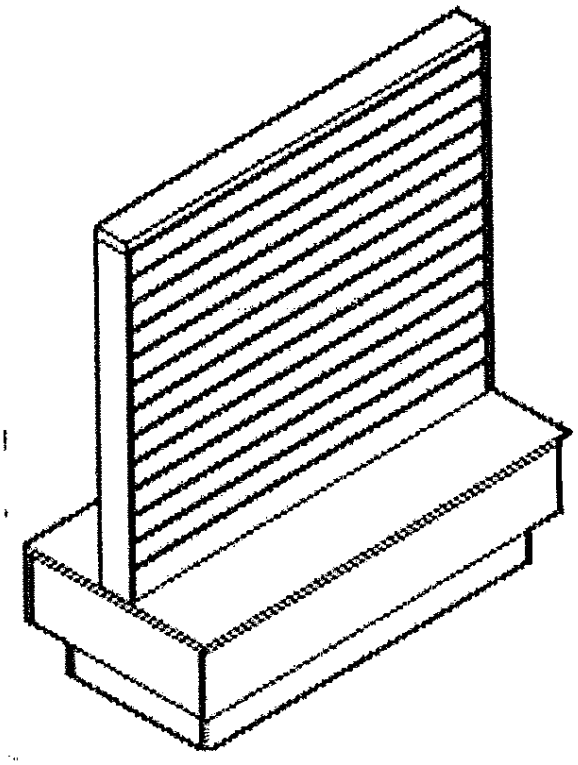

INCLUDE:
ALL SLATWALL TO HAVE NATURAL
ALUMINUM INSERTS
SLATWALL 3" OC
HEAVY DUTY CASTERS

Item Description: SLATWALL TWO WAY ON CASTERS

Client: CCRI

Project: Bookstore-Warwick

Item Identifier: SW.2

Height: 54
Width: 24
Depth: 24
Finish: OAK MELAMINE
Quantity: 2
spec by: FFI

Fixture Specification

Provide:
Madix steel wall section
solid back
shelves as shown
deluxe canopy flange

48" CORNICE W/SIGN TRACK
TO INCLUDE:
L SHAPE CORNICE AS SHOWN
FLIP BOLTS TO FASTEN
SOLID WOOD SIGN TRACK

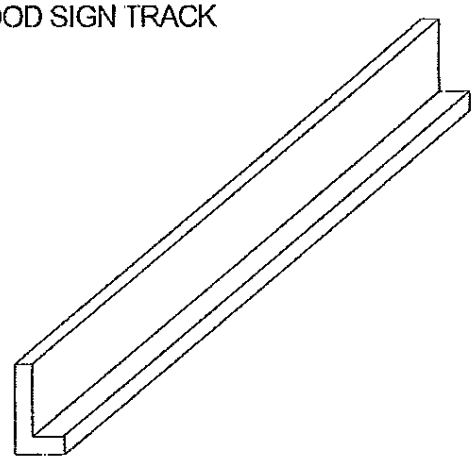

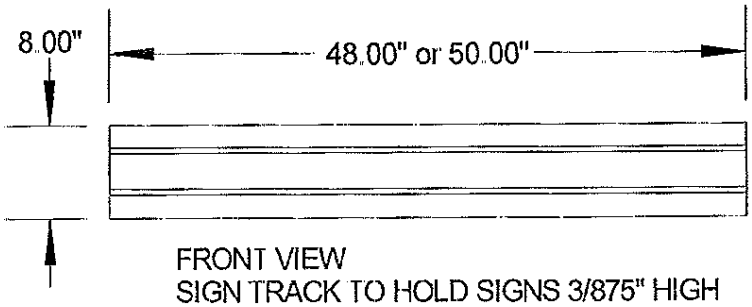

FRONT VIEW
SIGN TRACK TO HOLD SIGNS 3/875" HIGH

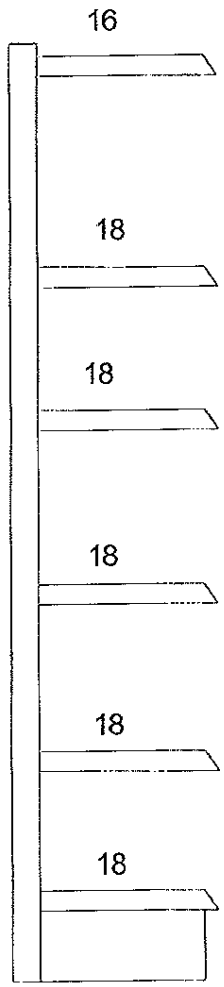

Madix steel shelf wall unit	Project	Item Identifier: T.1
	Community College of Rhode Island Warwick, RI	Height: 84 Width: 48 Depth: 21 Finish: Sahara Quantity: 14

Fixture Specification

Provide:
Madix steel wall section
solid back
shelves as shown

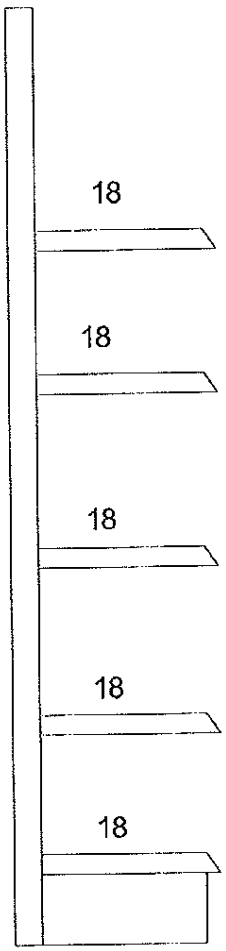

Madix steel shelf wall unit	Project	Item Identifier: T.1a
	Community College of Rhode Island Warwick, RI	Height: 84 Width: 48 Depth: 21 Finish: Sahara Quantity: 3

Fixture Specification

Provide:
Madix steel wall section
solid back-front and back
shelves as shown

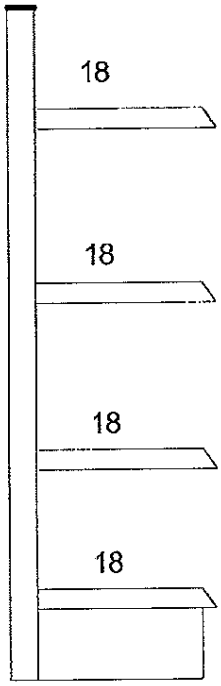

Madix steel shelf wall unit	Project Community College of Rhode Island Warwick, RI	Item Identifier: T.2 Height: 60 Width: 48 Depth: 21 Finish: Sahara Quantity: 3

Fixture Specification

Provide:
Madix steel wall section
solid back front and back
shelves as shown

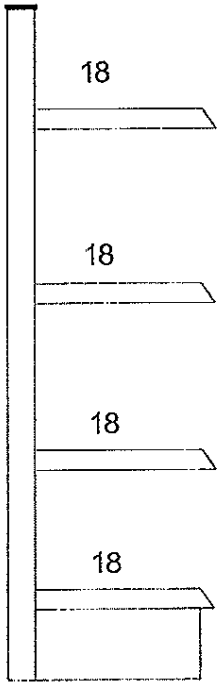

Madix steel shelf wall unit	Project	Item Identifier: T.3
	Community College of Rhode Island Warwick, RI	Height: 60 Width: 36 Depth: 21 Finish: Sahara Quantity: 1

Fixture Specification

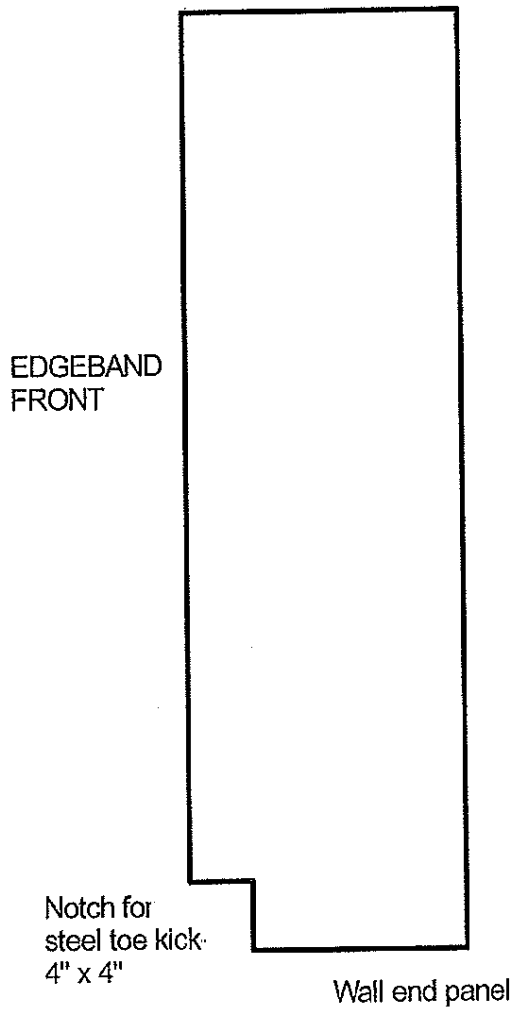

Material:	Project	Item Identifier: T 4
Natural Oak Melamine	Community College of Rhode Island Warwick, RI	Height: 85 Width: 22 Depth: .75 Finish: Melamine Quantity: 5

Fixture Specification

All connectors must be concealed

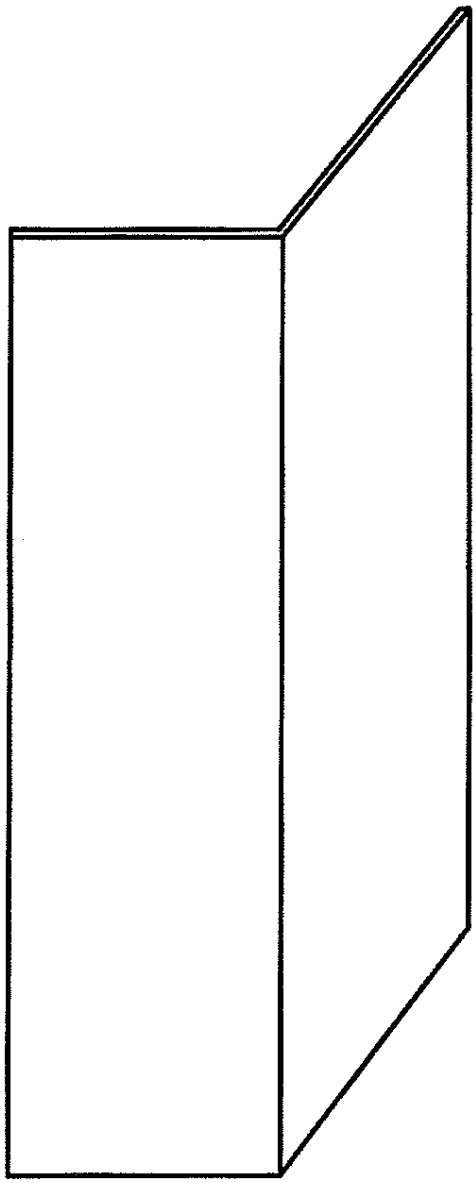

Corner column kit

Material: Oak Melamine	Project	Item Identifier: T.5
	Community College of Rhode Island Warwick, RI	Height: 85 Width: 23.5 Depth: 23.5 Finish: Melamine Quantity: 2

Fixture Specification

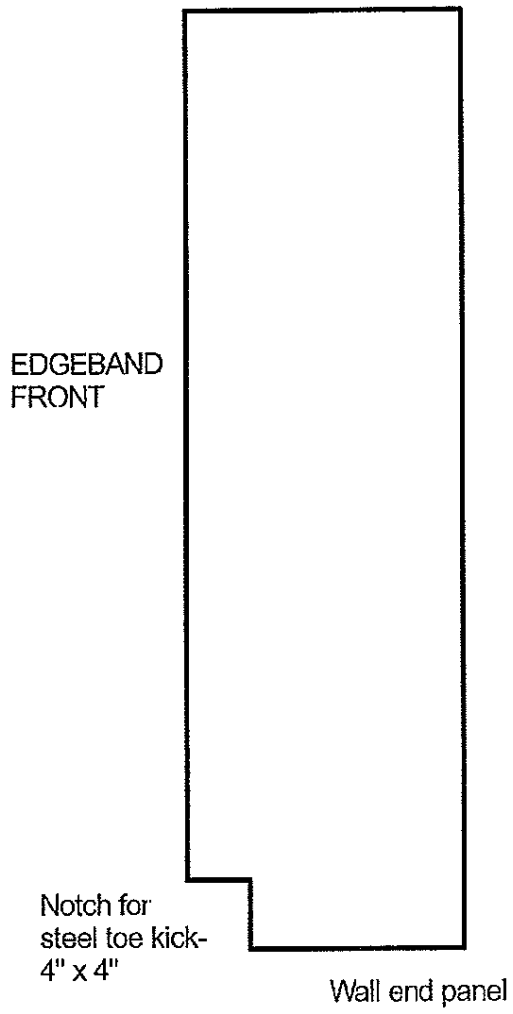

Material:	Project	Item Identifier: T.6
Natural Oak Melamine	Community College of Rhode Island Warwick, RI	Height: 61 Width: 22 Depth: .75 Finish: Melamine Quantity: 1

Fixture Specification

Provide:
Madix steel wall section
solid back
shelves as shown
deluxe canopy flange
Laminate door sliding storage
door kit-laminate to match
Madix Sahara.
Sliding door end panels - 2
Sliding door end fillers - 2
Lock for sliding doors.

48" CORNICE W/SIGN TRACK
TO INCLUDE:
L SHAPE CORNICE AS SHOWN
FLIP BOLTS TO FASTEN
SOLID WOOD SIGN TRACK

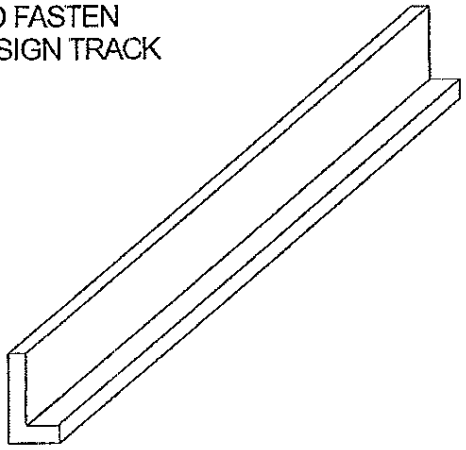

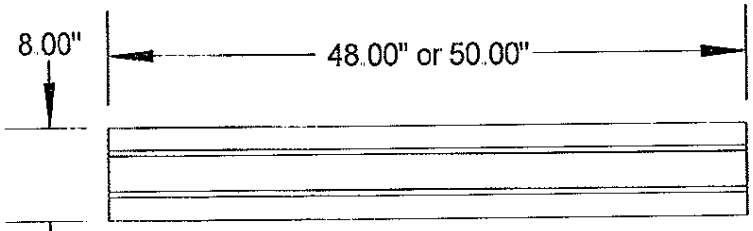

FRONT VIEW
SIGN TRACK TO HOLD SIGNS 3/875" HIGH

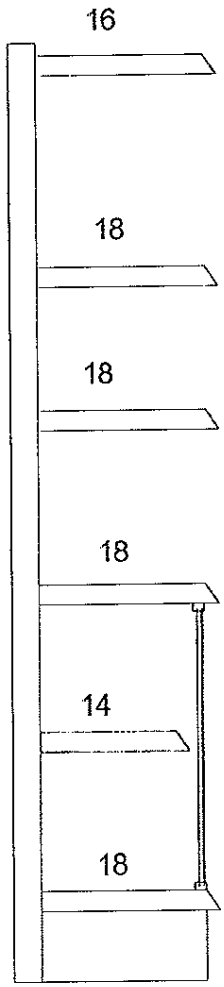

Madix steel shelf wall unit	Project Community College of Rhode Island Warwick, RI	Item Identifier: T.7 & T.7a Height: 84 Width: 48 & 36 Depth: 21 Finish: Sahara Quantity: 1 each

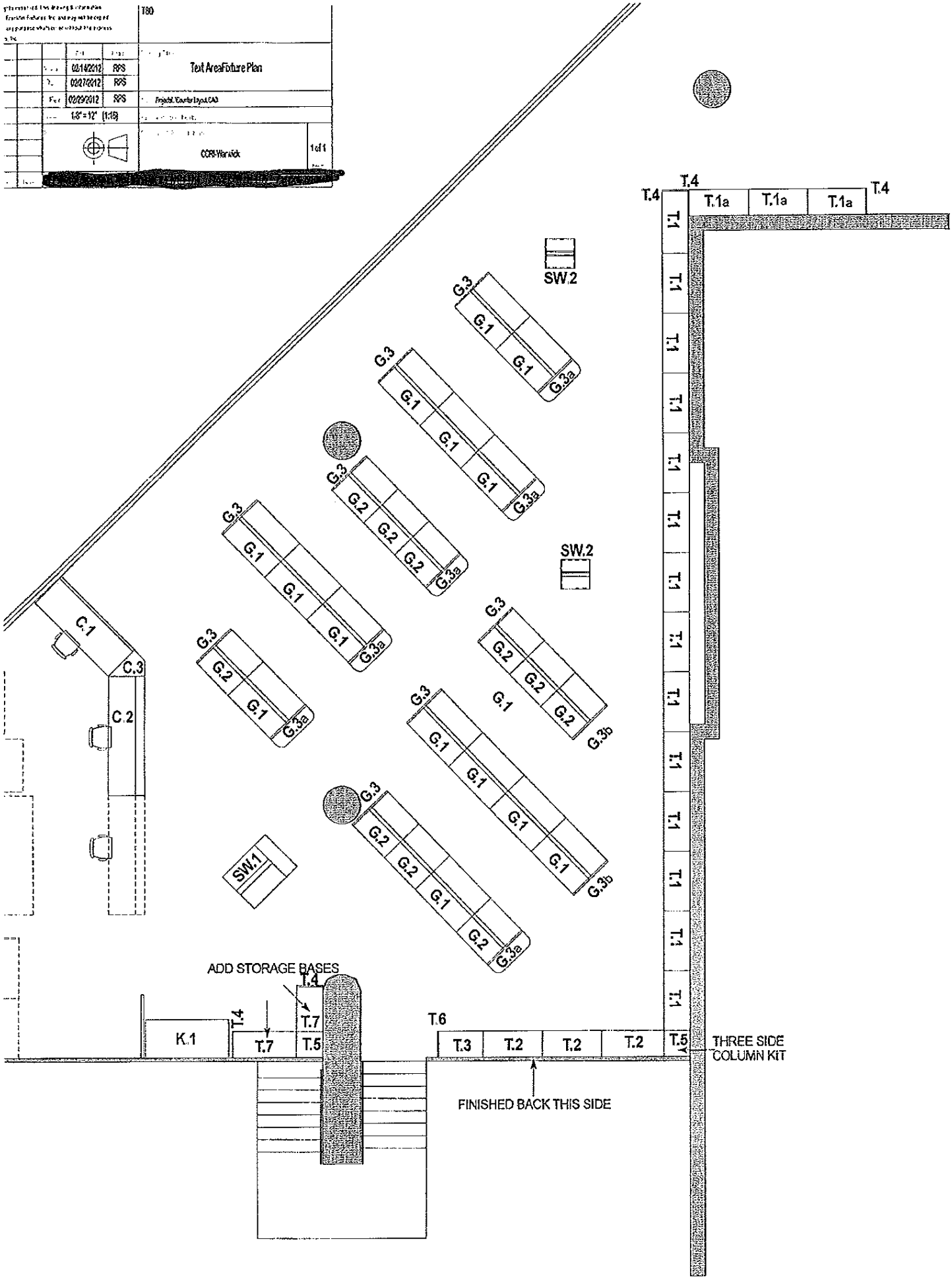
T80
02/14/2012 RPS
Text AreaFixture Plan
02/27/2012 RPS
02/29/2012 RPS
1/8" = 1'0" (1:15)
CCRI-Warwick
1of1
T.4
T.1a
T.1a
T.1a
T.4
T.1
SW.2
G.3
G.1
G.3a
G.2
G.3b
C.1
C.3
C.2
SW.1
ADD STORAGE BASES
K.1
T.7
T.5
T.6
T.3
T.2
T.5
THREE SIDE COLUMN KIT
FINISHED BACK THIS SIDE

Demolition, Installation & Fixture Specifications
Commuity College of Rhode Island
All Bookstore Locations

Community College of Rhode Island-Bookstore Fixtures

Pre Bid Worksite visit:

It is stronlgly recommended that interested bidder visit each worksite to review demolition conditions, load in logistics, contractor access and field measurements. Fixture contractor will be totally responsible for all site dimensions, mechanical locations, electrical locations and field conditions.

General Fixture Specifications:

A] Counters

1] All fixtures are to be priced in standard color melamine on mdf.
2] All countertops are to be standard grade High Pressure Laminate from Formica, Wilsonart or Pionite
3] All countertops are to be particleboard substrate 1 125" thick.
4] All counters are to be part of a modular counter system.
5] All connecters are to be hidden if possible
6] All panels and mid panels on counters are to be notched for electrical access as noted on spec sheets
7] All access panels specefied are to be removable from base shelf and match finish
8] All grommets are to be 2" black plastic
9] Light in showcase to include ballast in base for electrical connection.
10] All counters are to be installed, leveled and connected per plan with concealed connectors
11] All counter cavities are to have one adjustable shelf with holes and pins shelf support

Delolition Notes:

1] All electrical disconnect and reconnect is provided by owner's electrical contractor
2] All demolished material will be disposed of by owner. Move within building per owners instructions
3] Demolition is to take place in designated areas only. There is to be no storage of debris in the store sales area.
4] All areas under demolition must be protected and all effort is to be taken to prohibit public access

Installation Notes:

1] All installation to be done by trained store fixture installers. Additional labor is to be determined by fixture contractor. All labor must be covered by workmans compensation and liability insurance. Proof of insurance is to be made available to owner.
2] Area under demolition and fixture installation to be protected from public access.
3] All work is to be performed according to state and local building codes

DEMOLITION PLAN
COMMUNITY COLLEGE OF
RHODE ISLAND
WARWICK BOOKSTORE
SECOND FLOOR

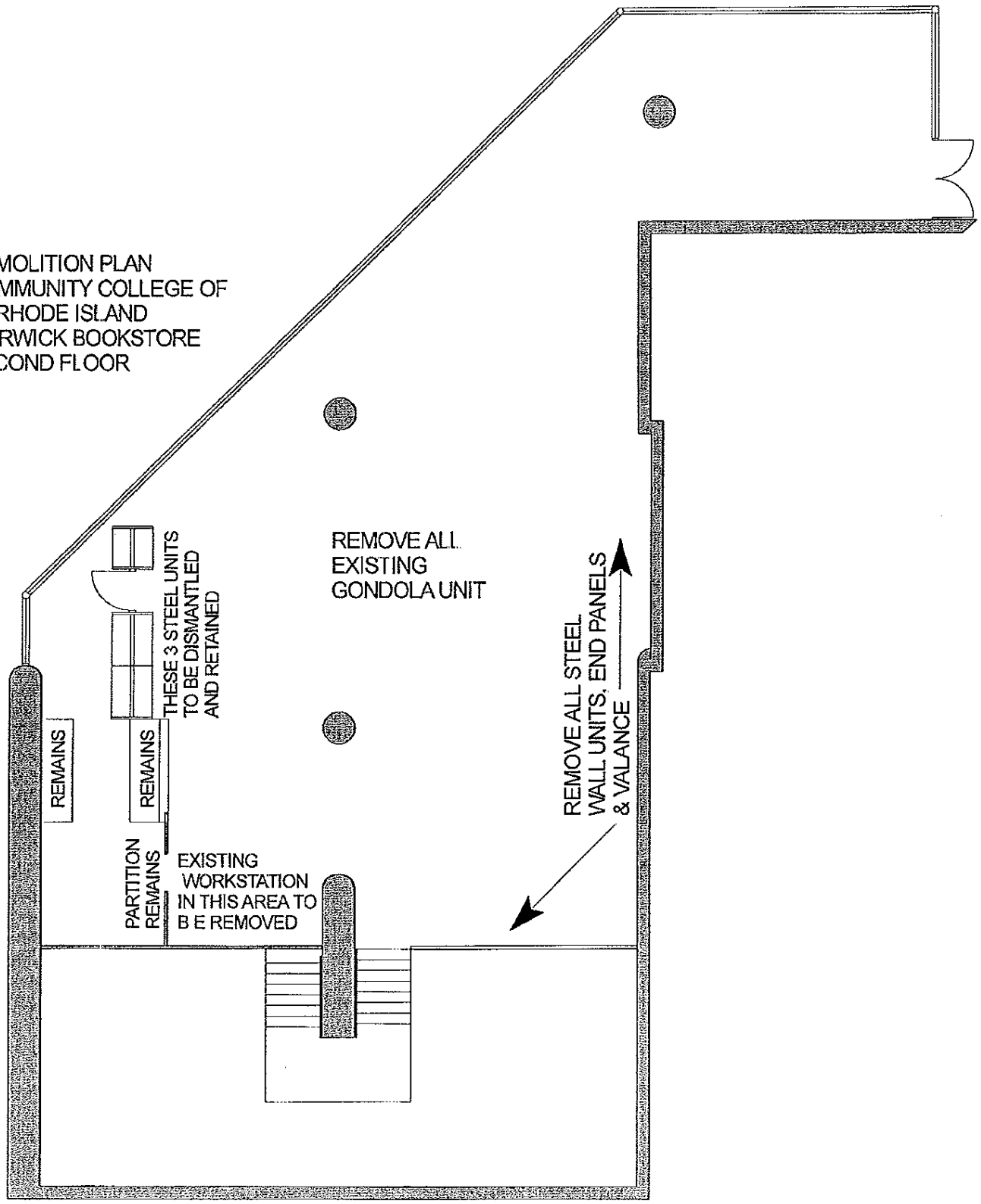

STATE OF RHODE ISLAND AND PROVIDENCE PLANTATIONS

Department of Administration
DIVISION OF PURCHASES
One Capitol Hill
Providence, RI 02908-5855

Tel: (401) 574-8100
Fax: (401) 574-8387
Website: www purchasing ri gov

TO SUPPLY AND INSTALL THE FOLLOWING FIXTURES IN THE BOOKSTORES LOCATED AT:

WARWICK CAMPUS
400 EAST AVE
WARWICK, RI 02886

LINCOLN CAMPUS
1762 LOUISQUISSET PIKE
LINCOLN, RI 02865

PROVIDENCE CAMPUS
ONE HILTON ST
PROVIDENCE, RI 02905

ALL WORK MUST BE SCHEDULED WITH THE BOOKSTORE MANAGER AT EACH LOCATION:
WORK MUST BE DONE SEQUENTIALLY BY CAMPUS

WORK AREAS MUST BE KEPT IN A SAFE AND ACCEPTABLE CONDITION. IF NECESSARY WORK AREAS MAY BE CLOSED OFF FROM CUSTOMER TRAFFIC.

ALL RESULTING DEBRIS TO BE REMOVED DAILY AND PROPERLY DISPOSED OF OFFSITE OWNER WILL PROVIDE DUMPSTER AT EACH LOCATION.

VENDOR TO BID A TOTAL PRICE TO INCLUDE ALL FIXTURES, DELIVERIES AND INSTALLATION.

VENDORS TO BE RESPONSIBLE FOR ALL PERMITS, FEES AND OTHER REGULATORY EXPENSES.

INSTALLATION OF STORE FIXTURES ON THIS ORDER CONFIRMATION:

INCLUDES REMOVAL OF EXISTING STEEL FIXTURES PER PLAN, MOVING EXISTING FIXTURES TO DOOR FOR REMOVAL BY OWNER. INCLUDES UNLOADING, LEVELING & SECURING OF NEW FIXTURES PER PLAN. OWNER TO PROVIDE ALL ELECTRICAL DEMO AND REINSTALLATION. TRASH REMOVAL TO OWNER'S CONTAINER.

Demolition, Installation & Fixture Specifications
Commuity College of Rhode Island
All Bookstore Locations

Community College of Rhode Island-Bookstore Fixtures

Pre Bid Worksite visit:

It is stronlgly recommended that interested bidder visit each worksite to review demolition conditions, load in logistics, contractor access and field measurements. Fixture contractor will be totally responsible for all site dimensions, mechanical locations, electrical locations and field conditions.

General Fixture Specifications:

A] Counters

1] All fixtures are to be priced in standard color melamine on mdf.
2] All countertops are to be standard grade High Pressure Laminate from Formica, Wilsonart or Pionite
3] All countertops are to be particleboard substrate 1.125" thick.
4] All counters are to be part of a modular counter system
5] All connecters are to be hidden if possible
6] All panels and mid panels on counters are to be notched for electrical access as noted on spec sheets
7] All access panels specefied are to be removable from base shelf and match finish
8] All grommets are to be 2" black plastic
9] Light in showcase to include ballast in base for electrical connection.
10] All counters are to be installed, leveled and connected per plan with concealed connectors
11] All counter cavities are to have one adjustable shelf with holes and pins shelf support

Delolition Notes:

1] All electrical disconnect and reconnect is provided by owner's electrical contractor
2] All demolished material will be disposed of by owner. Move within building per owners instructions
3] Demolition is to take place in designated areas only. There is to be no storage of debris in the store sales area.
4] All areas under demolition must be protected and all effort is to be taken to prohibit public access

Installation Notes:

1] All installation to be done by trained store fixture installers. Additional labor is to be determined by fixture contractor. All labor must be covered by workmans compensation and liability insurance. Proof of insurance is to be made available to owner
2] Area under demolition and fixture installation to be protected from public access.
3] All work is to be performed according to state and local building codes