February 8, 2012

STATE OF RHODE ISLAND AND PROVIDENCE PLANTATION
DEPARTMENT OF TRANSPORTATION

RHODE ISLAND CONTRACT NO.2011-CB-096

FEDERAL-AID PROJECT NO. FAP Nos: 3RD-PRTY(212), BRO-0383(002)

Natick Bridge No. 383

River St. Station 5+63 to East Ave. Station 18+00.

CITY/TOWN OF West Warwick, Warwick

COUNTY OF KENT

NOTICE TO PROSPECTIVE BIDDERS

ADDENDUM NO. 2 Prospective bidders and all concerned are hereby notified of the following changes in the Plans, Specifications, Proposal and Distribution of Quantities for this contract. These changes shall be incorporated in the Plans, Specifications, Proposal and Distribution of Quantities, and shall become an integral part of the Contract Documents.

A. Clarification

1. Hazmat Coordination with the Narragansett Indian Tribal Historic Preservation Office

   Reference to Level 3 Hazmat condition on Page CS-22, Section 44 relates to the requirements for personal protection to be provided by the Contractor for the Narragansett Indian Tribe Historic Preservation Office.

2. Definitions of Soil Types

   The Job Specific Specification definitions of soil types shall govern over the definitions in the Remedial Action Work Plan.

3. Earthwork End Areas

   Roadway earthwork end areas have been provided on the Cross Section Plans.

4. Certified Industrial Hygenist

   A Certified Industrial Hygienist is required for the services defined in the Contract Documents. Payment for this work shall be included in Item Code 202.9901 Handling, Hauling, and Stockpile Management of Contaminated Soils and Unclassified Soils.

5. Bituminous Pavement on Bridge Structure

   Per Item Code 800.9911 "Natick Bridge No. 383", all components above the beam seats, inclusive of the roadway bridge jonts, not specifically excluded shall be included in the lump sum price for Item Code 800.9911. As the bituminous pavement is not an excluded item of work, its cost shall be included in the lump sum price for Item Code 800.9911.

   The bituminous pavement on the bridge structure to be included in the lump sum price for Item Code 800.9911 shall be comprised of 3" of Superpave Hot Mix Asphalt - Surface Course Modified (9 mm), placed in two 1 1/2" layers.

6. Concrete Deck Slab Placement Sequence Plan

   The two deck regions designated as Section 1 need not be cast simultaneously.

7. Concrete Deck Slab Finishing

   The concrete deck slab finishing methods shall be in accordance with the Standard Specifications for Road & Bridge Construction and all compilations of Approved Specifications.

8. Sequence of Construction - Construction of New Structure

   The sequence of construction of the new structure, including the placement and removal of the temporary earth retaining system shall be in accordance with Contract Documents and Plans.

B. Contract Documents

1. CS-Pages

   a. Page CS-2

      Remove page CS-2 in its entirety and replace it with revised page CS-2 (R-1) attached to this Addendum No. 2. The Phase 1 Completion Date has been added under Section 3 Contract Completion Dates.

   b. Page CS-7

      Remove page CS-7 in its entirety and replace it with revised page CS-7 (R-1) attached to this Addendum No. 2. The Section 12 Electrical Facilities has been revised.

2. JS-Pages

   a. Index Page JS-iii

      Remove JS Index page JS-iii in its entirety and replace it with revised JS Index page JS-iii (R-1) attached to this Addendum No. 2. The title for Item Code 841.9901 has been revised to “Drilled Shaft – Furnish and Install in Soil” and Item Code 841.9903 “Drilled Shaft – Furnish and Install Rock Socket” has been added.

   b. Index Page JS-iv

      Remove JS Index page JS-iv in its entirety and replace it with revised JS Index page JS-iv (R-1) attached to this Addendum No. 2. The Code T.06 Conduit has been added to the index.

   c. Pages JS-28 and JS-29

      Remove pages JS-28 and JS-29 in their entirety and replace them with revised pages JS-28 (R-1) and JS-29 (R-1) attached to this Addendum No. 2. The Unclassified and Contaminated Soil Excavation and Handling section has been revised.

   d. Pages JS-43 and JS-44

Remove pages JS-43 and JS-44 in their entirety and replace them with revised pages JS-43 (R-1) and JS-44 (R-1) attached to this Addendum No. 2. The specification has been revised to allow for multiple stockpiles and the Basis of Payment for this item has been revised to Lump Sum.

e. Pages JS-130 through JS-149

Remove pages JS-130 through JS-149 in their entirety and replace them with revised pages JS-130 (R-1) through JS-149 (R-1) attached to this Addendum No. 2. The Section 100, Section 900, and page numbers have been revised.

f. Pages JS-214 through JS-238a

Remove pages JS-214 through JS-238 in their entirety and replace them with revised pages JS-214 (R-1) through JS-238 (R-1) and add new page JS-238a attached to this Addendum No. 2. The title for Item Code 841.9901 has been revised to "Drilled Shaft – Furnish and Install in Soil" and Item Code 841.9903 "Drilled Shaft – Furnish and Install Rock Socket" has been added. The Description, Method of Measurement and Basis of Payment have been revised.

g. Page JS-254A

Add new Page JS-254A attached to this Addendum No. 2. The Standard Specifications for Road and Bridge Construction Section T.06 has been revised.

C. Drawings/Plans - Change/Addition

1. Sheet 49

Modify the sheet as shown in Sketch No. 1 attached to this Addendum No. 2. The Materials Scetion has been revised.

Modify the sheet as shown in Sketch No. 2 attached to this Addendum No. 2. The Concrete Notes Note No. 1 has been revised.

Modify the sheet as shown in Sketch No. 3 attached to this Addendum No. 2. The Concrete Notes Note No. 22 has been revised.

2. Sheet 77

Modify the sheet as shown in Sketch No. 4 attached to this Addendum No. 2. The Deck Placement Sequence Notes have been revised.

D. Distribution of Quantities

1. Index Pages 1 through 4

Remove Index Pages 1 through 4 in their entirety and replace them with revised Index Pages 1 (R-1) through 4 (R-1) attached to this Addendum No. 2. The Table of Contents has been revised.

2. Page 16

Remove Page 16 in its entirety and replace it with revised Page 16 (R-1) attached to this Addendum No. 2. The Unit of Measure, Quantity and Location for Item Code 208.9901 "Wet Soil Stockpile" have been revised.

3. Pages 40 and 40a

   Remove Page 40 in its entirety and replace it with revised Page 40 (R-1) and add new Page 40a attached to this Addendum No. 2. The title for Item Code 841.9901 has been revised to "Drilled Shaft – Furnish and Install in Soil". The Unit of Measure and Quantity for Item Code 841.9902 "Drilled Shaft – Obstruction Removal" have been revised.

4. Page 52

   Remove Page 52 in its entirety and replace it with revised Page 52 (R-1) attached to this Addendum No. 2. The title for Item Code 929.9901 has been revised to "Field Office 550 Square Foot Minimum".

5. Page 68

   Remove Page 68 in its entirety and replace it with revised Page 68 (R-1) attached to this Addendum No. 2. Item Code 841.9903 "Drilled Shaft – Furnish and Install Rock Socket" has been added.

E. Contract Dates

1. Phase 1 Completion Date

   The Phase 1 Completion Date, 08/30/2013, has been added.

F. Other Item Changes

1. Item Code 202.9907

   Item Code 202.9907 "Load, Haul and Dispose Contaminated Soil, Type 3" has been set as an "only acceptable bid price" item, with a bid price of $20,000.00.

RI Department of Transportation
Chief Engineer

3. CONTRACT COMPLETION DATES

The following interim and substantial completion dates have been established for the assessment of liquidated damages and incentives/disincentives. Refer to the referenced special provisions and "Sequence of Construction" of these Contract Specific pages for more information.

Associated with Liquidated damages – see Special Provision 12.108.1000 "Prosecution and Progress":

	Completion Date
Phase 1 Completion	August 30, 2013
Substantial Completion	May 30, 2014

4. LUMP SUM BID ITEMS

The Contractor shall note that numerous bridge items on this project are paid for on a lump sum basis or are included for payment under other lump sum item(s). In general these include but are not limited to:

- The construction of the new Natick Bridge No. 383 in its entirety.
- The removal and disposal of the existing Natick Bridge No. 383.
- All electrical and lighting bridge related work.
- Temporary earth retaining systems, temporary containment barrier and associated dewatering.
- Gas Main Installation

As provided in Special Provisions Code 12.109.07 "Partial Payment of Lumps Sum Items", within ten (10) calendar days after the date of the Notice of Award, the Contractor shall submit to the Engineer for approval the breakdown of each lump sum bid item.

5. UNIT BID ITEM AND LUMP SUM BID ITEM PAYMENTS

For requirements and work described in the Contract Documents but not expressly identified to be measured separately for payment, the costs thereof shall be included in the contract bid prices of the items of work to which they pertain as listed in the Proposal.

6. REQUEST FOR INFORMATION (RFI)

An RFI is a document submitted by the Contractor requesting clarification of a portion of the Contract Documents or a field condition. All such requests shall include a detailed written statement indicating the specific Drawings or Specification to be clarified and the clarification requested. In addition, the Contractor shall:

a. Identify Drawings by Drawing number and location on the sheet.
b. Identify Specifications by Section number, page and paragraph
c. Provide description of the field condition requiring clarification.
d. Clearly state the item to be clarified, provide background information as appropriate, and explain why a response is needed.
e. Present Contractor's interpretation or understanding of the requirement.
f. Include possible solutions by text and/or drawings.

Improper RFI's are defined as RFI's that are not complete, and will be returned unanswered.

Frivolous RFI's are defined as:

a. RFI's that request information that is clearly shown on the Contract Documents.
b. RFI's that do not comply with the definition of an RFI as indicated above.

Verizon

Set new poles and anchor guys in West Warwick at the following locations:

River St. Sta. 9+66, Lt.
River St. Sta. 10+93, Lt.
River St. Sta. 12+05, Lt.
River St. Sta. 81+90, Lt.
River St. Sta. 80+95, Lt.

Set anchor guys on existing poles in West Warwick at the following locations:

River St. Sta. 8+90, Lt. (Pole # 5)
River St. Sta. 80+03, Rt. (Pole # 11)
Canna St. Sta. 41+80, Lt. (Pole # 1)

Remove existing utility poles in West Warwick at the following locations:

River St. Sta. 9+66, Lt. (Pole # 6)
River St. Sta. 10+47, Lt. (Pole # 7)
River St. Sta. 11+56, Rt. (Pole # 8)
River St. Sta. 81+15, Rt. (Pole # 10)
East Ave. Sta. 12+90, Rt. (Pole # 1)

Relocate overhead wires in Warwick and West Warwick at the following locations:

River St. Sta. 8+90, Lt. to 12+05, Lt.
River St. Sta. 80+03, Rt. to 10+93, Lt.
River St. Sta. 10+93, Lt. to Canna St. Sta. 41+80, Lt.

Cox Cable

Cox requires 30 days advance notification for scheduling outages. Cox will relocate overhead wires in Warwick and West Warwick at the following locations:

River St. Sta. 8+90, Lt. to 12+05, Lt.
River St. Sta. 80+03, Rt. to 10+93, Lt.
River St. Sta. 10+93, Lt. to Canna St. Sta. 41+80, Lt.

It is also required that the Contractor notify each utility no less than four (4) weeks in advance of the date and time that the Contractor intends to work in the vicinity of the utility's facility.

The Contractor shall provide all necessary temporary traffic control for utility work to be performed in advance of other construction.

The Contractor shall notify the Engineer at least 4 weeks prior to any temporary utility shut-off. The Engineer will be responsible to notify the local officials and utility companies to inform the affected residents.

12. ELECTRICAL FACILITIES

There are no temporary highway lighting and lighting services shown in the Contract Documents.

The Contractor shall note that the Existing Lighting Service Pedestal for the permanent lighting is located approximately at 776 East Ave. The Contractor shall coordinate with Joseph Blake at the Warwick Maintenance Department for entry into the Service Pedestal at 401-738-2000 ext. 6350.

13. COORDINATION WITH OTHER CONTRACTORS

Refer to Section 12.105.07 of the RI Department of Administration Procurement Regulations at Section 12.

14. SPECIALTY ITEMS

The following items are hereby designated as "Specialty Items":

a. Electrical
b. Landscaping
c. Structural Steel
d. Bridge Railing
e. Prestressed Precast Concrete Box Beams
f. Precast Concrete Arched Fascia Panels

INDEX
SPECIFICATIONS - JOB SPECIFIC

CODE	TITLE	PAGE
804.9930	Cased Soil Boring	JS- 155
804.9931	Rock Coring	
804.9932	Split Spoon Soil Samples	
804.9934	Pre- and Post-Construction Condition Survey	JS- 170
805	Earth Retaining Systems	JS- 173
805.99	Temporary Earth Retaining Systems	JS- 174
805.99	Temporary Containment Barrier	
805.9909	Geotechnical Instrumentation Installation, Initialization, Monitoring and Reporting	JS- 180
805.9910	Replacement of Vertical Monitoring Point	
805.9911	Replacement of Surface Monitoring Point	
805.9912	Replacement of Utility Monitoring Point	
805.9913	Replacement of Movement Monitoring Point	
805.9914	Replacement of Seismograph	
808	Cast-In-Place Structure Concrete Masonry	JS- 198
810	Reinforcing Steel	JS- 199
810.99	Mechanical Connectors	JS- 200
810.99	Galvanized Bar Reinforcement for Structures	JS- 202
813.99	Waterproofing Membrane	JS- 206
828.99	Elastomeric Bearings	JS- 213
841.9901	Drilled Shaft - Furnish and Install in Soil	JS- 214
841.9902	Drilled Shaft - Obstruction Removal	
841.9903	Drilled Shaft - Furnish and Install Rock Socket	
905.1000	Sidewalks	JS- 239
905.9901	Reset Brick Pavers Reset from On-Site Stockpile	JS- 240
907.1000	Dust Control	JS- 242
919.9910	Decontamination of Tools, Casing, and Drill Rig	JS- 243
919.9911	Disposal of Contaminated Fluid and Contaminated Drill Cuttings	
935.9901	Removing Bituminous Pavement by Micro-Milling	JS- 246
937.1000	Maintenance and Movement of Traffic Protective Devices	JS- 247

INDEX
SPECIFICATIONS - JOB SPECIFIC

CODE	TITLE	PAGE
938.1000	Price Adjustments	JS- 248
L.01	Loam, Plantable Soil or High Organic Soil	JS- 249
L.02	Seeding	JS- 250
L.02.1000	Seeding	JS- 251
L.06	Planting	JS- 252
T01.9901	Natick Bridge No. 383 - Electrical	JS- 253
T04.9901	Splice Kits	JS- 254
T.06	Conduit	JS- 254A
T08.9901	Light Standard and Luminaire Reset from On-Site Stockpile	JS- 255
T08.9902	Light Standard Foundation with Anchor Bolts Standard 18.1.0 Modified	JS- 256
T08.9910	Light Standard and Luminaire Reset from Stockpile On Bridge Pylon	JS- 257
T20.9901	4 Inch White Fast-Drying Temporary Waterborne Pavement Marking Paint	JS- 258
T20.9902	4 Inch Yellow Fast-Drying Temporary Waterborne Pavement Marking Paint	
T20.9903	6 Inch Temporary Epoxy Resin Pavement Markings White	JS- 259
T20.9904	12 Inch Temporary Epoxy Resin Pavement Markings White	
T20.9905	4 Inch Temporary Epoxy Resin Pavement Markings Yellow	
M.01	Borrow and Aggregates	JS- 262
M.02	Portland Cement Concrete	JS- 263

soil encountered in the work area provided they perform the required excavation subject to the approval of the Engineer. The Contractor shall assume all responsibility for the adequacy of the methods, materials, documentation, and equipment employed.

During excavation of unclassified, contaminated or hazardous soil the Contractor shall be required to control access, dust and sedimentation erosion. Fencing and staked hay bales shall be installed around excavations to protect public, limit site access and minimize the effects of erosion and surface run-off and as shown on the Plans or as directed by the Engineer.

While engaged in unclassified, contamination or hazardous materials removal, the Contractor shall be subject to on-Project inspection by the Engineer. If the work is in violation of the requirements of these Special Provisions, RIDOT will issue a stop work order to be in effect immediately and until the violation is resolved. Standby time and expenses required to resolve the violation shall be at the Contractor's expense.

All excavated Type A soils within the Right of Way proposed for reuse as common borrow shall undergo geotechnical testing at the point of excavation origin prior to placing in trucks. Soils meeting common borrow requirements shall be placed into trucks and hauled to an approved temporary stockpile location for reuse within the limits of the Project. All excavated soil Type A soils not meeting common borrow requirements shall be placed into trucks and, as applicable hauled to a Stockpile Area for further characterization (prior to off Project disposal) and covered with a 12-mil layer of polyethylene at the completion of each work day, as designated by Engineer.

All excavated Type A soils not proposed for reuse and , Type 1B, Type 2 or Type 3 soils shall immediately be placed into trucks and hauled to Stockpile Area for further characterization (prior to off Project disposal), and covered with a 12-mil layer of polyethylene at the completion of each work day, as designated by Engineer.

All temporary stockpile locations shall be surrounded by staked baled hay erosion checks. Temporary stockpile areas shall be selected by the Contractor and be subject to the approval of the Engineer. The covers, fencing and baled hay erosion checks shall be inspected daily and restored, as needed to control dust and erosion.

Contaminated soil shall be reused within Project limits, disposed at an off-Project recycling facility or disposal facility in accordance with RIDEM regulations for recycling/disposal of these materials. On Project confirmatory testing and characterization testing of Type 1B, 2, or 3 soils for disposal will be the responsibility of RIDOT and its consultant. Data will be provided to the Contractor

for disposal facility characterization. Disposal of material shall not be allowed at any facility that currently maintains a listing as a State or Federal waste site.

Imported soil testing and testing of excavated Type A or 1B soils for reuse as common borrow within the limits of the Project shall be the responsibility of the Contractor at no additional cost to the State.

All handling and disposal of materials shall conform to the applicable RIDEM requirements for handling, storage, transporting, and disposal of contaminated/hazardous waste material. The Contractor shall be responsible for submitting material testing data and any additional data obtained by the Contractor to the receiving facility, to the Engineer and to RIDEM prior to the removal and final disposal of contaminated material from Project limits or an interim stockpile area approved by the Engineer. Where specifications, requirements, and reference documents vary, the more stringent requirements shall apply.

Contaminated soil classifications under this Contract shall be as follows:

- Type A: Excess excavated Project soil that cannot be reused in which levels of arsenic, lead and other RCRA Eight Metals, TPH, VOCs and PAHs are found to be below RIDEM Method 1 Residential Direct Exposure Criteria (RDEC) through testing. This soil shall be disposed at an Industrial/Commercial site under Item Code 202.9902.

- Type 1B: Excavated or excess excavated Project soil that cannot be reused in which levels of arsenic, lead and other RCRA Eight Metals, TPH, VOCs and PAHs are found to be above RDEC but below I/C DEC through testing. This soil shall be loaded, hauled and disposed at a licensed facility under Item Codes 202.9903 and 202.9904. Concentrations are within disposal parameter limits allowed in state landfills as landfill cover.

- Type 2: Excavated Project soil in which levels of arsenic, lead and other RCRA Eight Metals, TPH, VOCs and PAHs are found to be above I/C DEC through testing but are within acceptable criteria parameters such that the material can be disposed of in out-of-state landfills for landfilling without pretreatment or the material is suitable for asphalt batching. This soil shall be loaded, hauled and disposed at a licensed facility under Item Codes 202.9905 and 202.9906.

- Type 3: Excavated Project soil in which contamination levels exceed EPA and/or RIDEM hazardous waste characteristics necessitating disposal as hazardous waste. Type 3 soils have not been encountered on the Project but a Bid Item has been inserted in the Proposal under Item Code

CODE 208.9901 WET SOIL STOCKPILE

DESCRIPTION:

This item shall consist of constructing, maintaining, securing, and removing wet soil stockpiles to dewater excavate as shown on the details and as directed by the Engineer. The stockpiles shall be located within the project limits as approved by the Engineer. The location of the stockpiles shall not obstruct through vehicular and pedestrian traffic. The stockpiles shall be maintained for the duration of excavating, dewatering, and disposing of wet excavate.

MATERIALS:

All materials used, including but not limited to, hay bales and concrete barrier, shall conform to the standard specifications for the applicable items.

METHOD OF CONSTRUCTION:

The Contractor shall determine the size and locations of the stockpiles based on his anticipated excavation operations. Prior to constructing the stockpiles, the Contractor shall submit a plan to the Engineer for approval showing the size and limits of the proposed stockpiles. The Contractor shall construct the wet soil stockpiles in accordance with the detail and only at the locations approved by the Engineer. Locations for stockpiles shall be submitted to RIDOT for approval of the location from the RI Department of Environmental Management Water Quality Section before any such stockpile shall be utilized. The stockpile shall be complete and ready to accept excavate prior to initiating any excavation operations.

The actual dimensions of the wet soil stockpile shall be determined by the Contractor. However, it shall be large enough to contain the amount of excavated material anticipated at any one period and still provide ample operating room for turning the excavated material to facilitate drying, loading, and unloading within the confines of the stockpile.

The material shall be thoroughly dried and turned over as necessary to facilitate the drying process.

Upon completion of excavation operations, and after all excavated material is removed, the Contractor shall restore the site to the final condition in accordance with the Plans. All materials used to construct the wet soil stockpile, including but not limited to hay bales and concrete barrier, shall remain the property of the Contractor and shall be disposed of legally.

METHOD OF MEASUREMENT:

This item will not be measured for payment.

BASIS OF PAYMENT:

The accepted quantity of Item 208.9901 ”WET SOIL STOCKPILE” will be paid for at the contract “Lump Sum” price as listed in the Proposal. The price so stated shall constitute full and complete compensation for all labor, materials, tools, equipment, and all other incidentals required to complete the construction of the gas mains and appurtenances as described above under “DESCRIPTION” and elsewhere in the Contract Documents, complete in place and accepted by the Engineer.

Partial payments for this Lump Sum item will be made in accordance with Special Provision Code 12.109.07.

NATIONAL GRID

DOT BRIDGE REPLACEMENT OF
NATICK BRIDGE NO. 383
(EAST AVE)

PERMANENT GAS MAIN INSTALLATION ACROSS NEW BRIDGE
AND
EXISTING GAS MAIN ABANDONMENT ACROSS EXISTING BRIDGE

WEST WARWICK/WARWICK, RHODE ISLAND

SECTION 100
(STATE APPOINTED GAS CONTRACTOR WORK)

JOB DESCRIPTION
AND
DESIGN SPECIFICS

June 5, 2011

101 JOB DESCRIPTION

101.1 Work within this project by the state appointed bridge contractor consists of:

101.11 Installation of (2) 8-inch plastic SDR 13.5 casing pipes or “sleeves” for installation of the permanent 4” gas main cast in the new bridge, north/south side approach slabs and through the backwall sections, 38 feet total (19 feet each end).

101.2 Work within this project by the state appointed gas contractor consists of:

101.21 Installation of 4-inch steel pipe for the permanent gas main within the roadway, through the 8-inch plastic sleeves installed through the abutment walls by the bridge contractor and across the new bridge structure, including link seals between the 4-inch steel carrier pipe and the 8-inch plastic sleeve, double roller supports at each utility support beam and FRP shields between the double roller supports and the 4-inch steel pipe, 600 feet total

101.22 Installation of ball valve isolation valves on each side of the new bridge.

101.23 Tie-in sections using TD Williamson 3-Way Tee fittings.

101.24 Pressure testing the pipe installed for the permanent gas main to 150 psig for a minimum of 1 hour in accordance with Section 106 and installation of cathodic protection as indicated on the design.

101.25 Development of "as-built" drawings based upon the National Grid Location Plans.

101.3 All work included in this section shall be performed by the state appointed National Grid approved gas piping contractor.

101.4 Live gas tie-ins and cut-offs will be done exclusively by the National Grid.

101.5 National Grid reserves the right to make inspections of the work during the progress of installation and, where required, have all installation sequences performed in the presence of its inspector or authorized agent.

102 **MATERIAL AVAILABILITY**

102.1 All piping materials, including pipe, valves, fittings and appurtenances, shall be provided by National Grid and shall not include padding sand and special backfill. Material shall be available at a designated National Grid location during normal working hours. Transportation to the job site, including loading and unloading, shall be performed by the contractor.

103 **MATERIAL – SPECIFICATIONS – PIPE**

103.1 **8-Inch Plastic (Polyethylene) Pipe: (Sleeves under Approach Slabs and through Backwalls (Permanent))**

103.11 Length Required: Approximately 40 feet (2 – 20 foot sections)

103.12 Specifications: SDR 13.5

103.13 Wall Thickness (t): (0.639")

103.2 **Four-Inch Steel Pipe: (Main Across Bridge)**

103.21 Length Required: Approximately 180 feet

103.22 Specifications: API-5L X42 PSL-2, ERW, bevel ends, double random lengths.

103.23 Wall Thickness (t): standard wall (0.237")

103.24 Longitudinal Joint Factor (E): 1.0

103.25 Minimum Specific Yield Strength (S); 42,000 psi

103.26 Design Hoop Stress @ psig =

$$\frac{(100)(P)(D)}{2(t)(E)(S)} = \frac{(100)(100)(12.75)}{(2)(0.237)(1.0)(42,000)} = 0.79\% \text{ of SMYS}$$

103.27 Pipe Coating: Fusion Bonded Epoxy 16 mils plus 25 mils of Abrasion Resistant Epoxy or Pritec 15/50

103.2 **Four-Inch Steel Pipe: (Main in the Road)**

103.21 Length Required: Approximately 420 feet

103.22 Specifications: API-5L Grade B PSL-2, ERW, bevel ends.

103.23 Wall Thickness (t): standard wall (0.2375”)

103.24 Longitudinal Joint Factor (E): 1.0

103.25 Minimum Specific Yield Strength (S); 35,000 psi

103.26 Design Hoop Stress @ psig =

$$\frac{(100)(P)(D)}{2(t)(E)(S)} = \frac{(100)(100)(12.75)}{(2)(0.237)(1.0)(35,000)} = 0.95\% \text{ of SMYS}$$

103.27 Pipe Coating: Pritec 10/40; 50 mils

104 **OTHER MATERIAL**

104.1 **Weld Valves**

104.11 (2) 4” Ball Valves

104.2 **Weld Fittings:**

104.21 Elbow: (6) 4”x 90
104.22 Cap: (3) 4”; (1) 2”
104.23 TDW 3-Way Tee: (1) 4”x 2”; (2) 4”

104.3 **Other:**

104.31 (4) Glas Mesh FRP Type 180 Saddles (support roller to pipe protection)
(14) 4” LB&A Adjustable Roll Guides Type 3B (Blue coated w/ non-conductive rollers)
(20) LS-425-S Link Seals

(2) 4” Dresser 711 End Caps for Steel
(2) Street Valve Box
420’ of 4” Marking Tape

105 INSTALLATION OF MAIN

105.1 All steel pipe installation work shall conform to the requirements of National Grid’s Installation and Code Reconciliation: Section 200, Installation of Steel Gas Mains, Revised March 26, 1992.

105.2 The installation of the temporary pipe on the bridge and within the street shall conform to the Natick Bridge Installation Plans and Details.

105.3 Installations will terminate as close to the tie-in points as practical. Both tie-in locations must be aligned with the existing pipe when installed.

105.4 Any damage to the pipe or pipe coating should be immediately brought to the attention of National Grid construction department or the on-site inspector for inspection and, if necessary, repair or replacement.

106 PRESSURE TEST

106.1 Pressure test the permanent bridge gas pipes in accordance with paragraph 208A to a pressure of 150 psig for a minimum of 1 hour.

106.2 Test Media: Compressed air, inert gas, or any combination thereof. The contractor shall provide the air compressor and/or inert gas for all required pressure testing.

107 TIE-IN AND PURGE – BY NATIONAL GRID

107.1 Tie-in and purge procedures will be performed exclusively by National Grid under a separate report.

108 METHOD OF MEASUREMENT

108.1 Gas pipe shall be measured and paid for by the linear foot, complete and in place. The unit bid price per linear foot shall include saw cutting and R&D of existing pavement; trench excavations and R&D of all excavated material from trench in grass and/or asphalt roadway; supply and installation of padding sand and processed gravel backfill as needed with 95% compaction; pig and jeep pipe for steel installations; installation of the gas main, associated fittings, appurtenances, and cathodic protection; pressure testing the pipe; preparation of all tie-in pieces; welding of all fitting installation of a minimum of 4” of temporary pavement in 2” lifts (if needed); installation of shoring for the trench (if needed) and any other miscellaneous items stated in the project specifications and on the plans.

108.2 Ledge excavation, excavation of unsuitable material, and special backfill shall be paid for separately under the appropriate bid items by the cubic yard. For specifications on padding sand and gravel backfill materials see Section 210.03.

INSTALLATION SPECIFICATIONS
AND CODE RECONCILIATION
SECTION 200
INSTALLATION OF STEEL GAS MAIN
MARCH 21, 1975

(Revised March 26, 1992 - See Revision List Page 8)

201 CONSTRUCTION SPECIFICS (FR 192.5, .303; ANSI 841.21)

201.01 All construction work performed by the Contractor shall be in accordance with the primary and supplemental publications of 49CFR 1921/; the ANSI Standard2/, B31.8-1968 Code; and National Grid Construction Specifications and Drawings. The Contractor shall also abide by the Terms and Conditions for General Construction. Any variation with, deletion from, or additions to the named references and the Project Drawings due to local conditions must originate from sound and specific reason. Arbitrary changes are not permitted. Remedial work required for noncompliance, unacceptable changes or additions, or acceptable changes or additions, where neither have received proper Company approval, will be at the Contractor's expense.

201.02 In the event specifics are detailed by both 49CFR 192 and ANSI B31.8, the more rigorous requirement shall control, unless specifically stated otherwise by the Company specifications.

201.03 All construction must meet the requirements of a Class 4 installation as defined by 49CFR 192 and as provided for by these specifications. All piping shall be designed for Design Hoop Stress levels of less than 20% of SMYS.

201.04 As used in this section "may" means "is permitted to" or "is authorized to," "may not" means "is not permitted to" or "is not authorized to," and "shall" is used in the mandatory and imperative sense.

202 GENERAL REQUIREMENTS (FR 192.305, .307; ANSI 841.221, .223, .271)

202.01 The Company has authority to enforce construction in accordance with Subsection 201, including the removal and replacement of any section of main that fails to meet the described standards.

1) The Federal Register, Volume 35, Number 161, Title 49 Part 192 (Under OPS, DOT) dated August 19, 1970 and effective November 1970, is designated as 49CFR 192. Specific paragraph references are preceded by FR to indicate source.

2) The ANSI Standard B31.8-1968 is designated as ANSI B31.8. Specific paragraph references are preceded by ANSI as to indicate source.

3) National Grid and its agents are designated as the Company.

202.02 Material Handling

202.02.1 Materials issued to the Contractor by the Company become his responsibility. The Contractor shall assume the responsibility of inventory and inspection before acceptance of materials. Methods of material transfer, handling, and storage are subject to the approval of the Company. Any material determined, by the sole determination of the Company, to be unsatisfactory for construction after acceptance by the Contractor, shall be repaired to the complete satisfaction of the Company, or replaced at the Contractor's expense. Any damage discovered previous to the Contractor's acceptance shall be replaced by the Company or repaired by the Contractor at a predetermined expense to the Company.

202.02.2 The hauling and stringing of pipe or other materials shall be performed in such manner as to prevent damage and to cause the least interference with the normal use of roadways or driveways. Gaps shall be left at intervals to permit passage of vehicles

and pedestrians. In the event transportation by rail or flatcar is involved, the provisions of API Standard RP5L1 shall apply.

202.02.3 Should it become necessary for the Contractor to store material, the Contractor shall do so at his expense and in a manner that will prevent damage from weather, vandalism, or other causes.

202.03 Primary material shall be provided by the Company. The Contractor shall provide all equipment necessary for installation of the facility as designated in Table 200-1, unless otherwise specified.

202.04 The Contractor shall provide all equipment necessary to test for gas tightness, structure integrity, and pigging as designated in Table 200-2, unless otherwise specified.

202.05 Permits for installation shall be provided by the Company. All permits for the transportation of pipe and other materials, and for construction procedures such as blasting shall be secured by the Contractor.

203 TRENCHING (FR 192.327; ANSI 841.16)

203.01 The route of the main shall be as shown on the plans. The specifications and drawings unless otherwise required by field conditions and specifically agreed to by the Company. The Contractor shall conduct his operations so that paving, driveway, and sidewalk cuts are bridged immediately after the trenching operation. Work shall be executed by the Contractor so that all fire hydrants and hydrant valves adjacent to the work area shall be readily accessible to fire-fighting apparatus. Under no conditions shall any materials or obstacles be placed within 15 feet of any fire hydrant or control valve unless by permit secured by the Contractor from the proper authorities.

203.02 All trenching operations shall conform to local Township, Town, City, State, or Federal specifications as required with regard to the overall length, width, and depth of the operation.

203.03 Trenching includes all excavation whether by trenching machine, power shovel, hand or other methods, which may be necessary for preparation of the pipe bed. The Company Specifications require a normal minimum cover of 44 inches. In no event shall depths less than 24 inches be allowed.

203.04 Payment for ledge removal by blasting or other means is limited to the specified dimensions of the trench plus an additional six inches (6") below the pipe for padding. Any ledge removal in excess, without the written approval of the Company, will be at the expense of the Contractor.

203.05 The normal width of the trench shall be the diameter of the pipe plus 14" unless otherwise required to meet minimum trench requirements, or as specified or agreed on in order to facilitate or expedite installation, or to improve the efficiency of construction so as to attain minimum cost of overall installation. Opening width may be increased as necessary for the installation of valves, fittings and appurtenances.

203.06 The minimum width of the trench shall be that which is necessary for the proper fabrication, installation, and padding or other protection of the pipeline and all materials and appurtenances associated with the system installation, unless otherwise specified by the Company.

203.07 A minimum clearance of three feet (3') shall be maintained between parallel runs, and a minimum clearance of six inches (6") shall be maintained at crossings of the Company main and a foreign structure, or shall be otherwise protected as specifically indicated by design detail. Where in-field conditions require variations with the above, the Design Engineer shall be consulted and methods of appropriate protection shall be in accordance with his specifications.

203.08 Pavement Cuts

203.08.1 Pavement shall be cut to the full trench width prior to excavation to provide a neat patch joint.

203.08.2 Where required by local governmental agencies, paving shall be cut six inches (6") wider than the trench in order to provide for a neat joint overlap on both sides unless one edge is adjacent to the curbing.

203.08.3 No payment for paving excavations wider than specified will be allowed unless specifically agreed to by the Company.

203.09 Surface materials must be kept separate from potential backfill material. The term "surface materials" includes asphalt, oiled sand, concrete, brick, paving stones, loam, and other surface substance which is dissimilar to the substrata materials of the trench excavation. Trenching includes removal and appropriate disposition of this material as the work progresses.

203.10 Care shall be taken in placing excavated material so that lawns and shrubs are not covered or damaged, and, if possible, streets and gutters are left unobstructed.

203.11 Excess excavated material that is acceptable for backfill shall be removed to a site satisfactory to the Company at the Contractor's expense.

203.12 Precautions shall be taken to avoid damage to any existing utilities. Proper support shall be provided before excavating below any utility line. However, when a utility line is accidentally damaged or broken, the Contractor shall immediately notify the authorities of the utility involve Contractor shall then cooperate and assist with immediate repair of damaged line, and in no case shall the trench be backfilled before approval by authorities of the involved utility is obtained.

203.13 Shoring will be provided in accordance with OSHA requirements, or where soil conditions are such that excessive widening of the trench occurs due to caving.

204 INSTALLATION

204.01 Welding or other joining procedure must be continuous from the point of origin to terminus and intermittent installations along the route of traverse is not permitted without special approval of the Design Engineer.

204.02 Due to difficulties encountered in support and alignment of "double joined" sections of double random lengths of pipe, the practice of double joining is not allowed.

204.03 All connecting points with the existing main must be aligned and spaced for connection to the existing main when installed in order that connecting segments may be true and continuous.

204.04 Adequate methods shall be employed to prevent the entrance of dirt or debris into the pipe during stringing and installation.

204.05 All pipe and associated equipment shall be inspected prior to installation but after stringing to insure that damage has not occurred to the hardware or protective coating during handling. The provisions of Subsection 202.02 apply to any damages discovered.

205 WELDING OF STEEL (FR 192.223, .225, .227, .229, 231, .235, .241,.243, .245; ANSI 821.3, 823.1, 824.1, 825.1, .2, 828.1, 841.22)

205.01 General

205.01.1 Welds and welding procedures must be qualified under API Standard 1104 and Subpart E of 49CFR 192.

205.01.2 All welders must be qualified under National Grid Safety Department Standards and FR 192.227.

205.01.3 The quality of field welds will be checked by either destructive or nondestructive inspection.

205.01.3.1 Nondestructive inspection shall consist of radiographic examination over the entire weld circumference, unless otherwise specified.

205.01.3.2 Destructive testing requires a field weld to be cut from the pipe as a cylinder and tested according to the requirements of API standard 1104.

205.01.4 The Contractor will cooperate with the Company during inspection of welded joints. The welds inspected will be selected at random by the Company. Inspected weld shall be identified and noted on the Foreman's Work Order. If a weld is nondestructively tested, the testing company will examine the welds and classify approval or rejection.

205.01.5 If there is any reason to believe that a field weld is defective after nondestructive testing and it cannot be repaired in accordance with FR 192.245, it shall be removed from the line with the cost for cutting and rewelding borne by the Contractor. The welder may be disqualified for further construction if deemed appropriate by the Company.

205.02 Testing and Inspection

205.02.1 Initial weld inspection for steel main

205.02.1.1 A testing company shall be employed by the Company, at its expense, unless otherwise specified, to nondestructively test by techniques described in Sub-section 205.01.3.1 all welds done by each welder during his first day on the job. A minimum of five (5) welds shall be tested during the testing period. Results of the test must be satisfactory and shall be reported to the project inspector and the Company Safety Department before proceeding with further construction.

205.02.1.2 The radiographic contractor must provide documentary evidence that the radiographer who interprets the film is a certified SNT-TC-1A Level 11 or Level 111 radiographer.

205.02.2 In addition to Subsection 205.02.1, the Company will inspect, at its expense, 10% of the project's welds. The specifications of Subsections 205.01.4 and 205.01.5 will apply.

205.03 Welding Specifics

205.03.1 A firm and positive grounding electrical connection must be established. Connecting apparatus equal to or exceeding the requirements of the Pipetron Quick-Bond Clamp is required, and jury-rig attachments such as homemade spring bars, etc., are disallowed.

205.03.2 Arc burns have been found to cause serious stress concentrations in pipe. The metallurgical notch caused by arc burns shall be prevented or eliminated in all mains. Arc burns resulting from faulty grounds and connections are not allowed and must be removed by cutting out the damaged portion of the pipe as a cylinder and replaced at the Contractor's expense. (See Subsection 209.)

205.03.3 It is suggested that grinding be given consideration after both the root and hot pass of welds in order to assure a clean field for subsequent welding. This practice may obviate an area of potential weld test failure.

205.03.4 The different wall thickness between pipe and fittings requires that the thicker wall be ground or the weld joint backwelded to avoid stress concentrations.

206 BENDS, ELBOWS, AND FITTINGS (FR 192.147, .149, .155, .313, .315; ANSI 831.21, .22, .23, .3, .4, .5, 841.23)

206.01 Flanges, Gaskets and Bolting

206.01.1 Steel pipeline flanges shall be manufactured in accordance with MSS Standard SP-44.

206.01.2 Flange connections between 150 psi steel and Class 125 cast iron flanges will be made with flat faced flanges, full faced gaskets, and allow steel bolts conforming to ASTM Specification A-193.

206.01.3 Flange connections between steel flanges will be made with raised face flanges, flat ring gaskets, and alloy steel bolts conforming to ASTM Specification A-193.

206.01.4 PSI products flange insulating gasket kits shall be used wherever points of isolation are specified in Section 900. Gasket kit specification is as follows: PSI Gasket Seal Type E with Phenolic Retainer and Nitrile (Buna N) Seal equipped with one piece sleeve and washers and steel washers. Alloy-steel bolts conforming to ASTM Specification A-193 with A-194 nuts shall be used in conjunction with raised face flanges when both are steel and with flat face flanges when one is steel and the other Class 125 cast iron.

206.02 Elbows and Bends

206.02.1 Miter bends shall be disallowed.

206.02.2 Elbows, reducers, tees, laterals, and other fittings shall be standard wall conforming with ASTM Speciation A-234, Grade WPB.

206.02.3 Field formed cold bends may be used for changes of direction less than 1-1/2 degrees per diameter length. They must be free from buckling, cracks, or other evidence of mechanical damage, and shall be formed with an appropriate die or shoe such that the deformation does not produce a difference between the maximum and minimum diameters in excess of 2.5% of the nominal diameter.

206.02.4 For greater changes in direction than that provided for in Subsection 206.02.3, factory-made wrought-steel welding elbows or transverse segments, cut there from shall be used. For tranverse segments, the arc length measured along the crotch shall be at least on inch (1") on pipe sizes two inches (2") and larger.

206.03 Branch Connections

206.03.1 Tees and branches for branch connections with d/D ratios greater than 1/3 and operating at less than 20% of SMYS, shall be fabricated with factory manufactured fittings having smooth configuration and manufactured in accordance with applicable codes. Where the complete fitting cannot be used, full encirclement fittings shall be provided in accordance with Figure 831-D of the ANSI B31.8.

206.03.2 Tees or laterals for branch connections or manifolds, with d/D ratios of less than 1/3 and operating at less than 20% of SMYS, may be field- or shop fabricated from pipe, if approved by the Design Engineer.

206.03.3 Thread-o-let and weld-o-let penetrations shall be clean cut holes for the full diameter of the connection.

207 SURFACE DAMAGE AND IMPERFECTIONS (FR 192.309)

207.01 Inspection for the detection of dents, gouges, and grooves shall be made prior to the pipe section being welded into the line, or just ahead of the backfilling operation. A dent is a depression which produces a gross disturbance in the curvature of the pipe wall without reducing the pipe wall thickness. A gouge or groove results where the metal of the pipe has been disrupted producing

minor changes in wall thickness and resulting points of stress concentrators.

207.02 A dent shall be removed where: it contains a stress concentrator such as a gouge, groove, or scratch; or if the dent results in a depression of more than 2% of the nominal pipe diameter, enclosed in an area of less than one pipe diameter in any direction. Gouges and grooves shall always be removed.

207.03 Dents requiring removal shall be removed by cutting out the damaged portion of the pipe as a cylinder, or shall be repaired by installing full encirclement reinforcing segments to completely lap the damaged area. Patching or coupon replacement is not permissible.

207.04 A gouge or groove shall be removed by smoothly grinding or sanding, provided that the remaining wall thickness is not less than that required by the pipe specification tolerances. Where the remaining wall thickness becomes less than the pipe specification tolerances, repair must be made by cutting out the damaged portion of the pipe as a cylinder. Patching or coupon replacement is not permitted.

208 INTERNAL CLEANING

208.01 Prior to the pressure test, each section of completed construction shall be "pigged" to remove any scale, dirt, or debris which may have been inadvertently entrained. Pigging shall be repeated until the exit air is free of traces of dust and dirt. The Contractor shall be responsible, at his expense, for locating and removing a trapped pig, and shall repair the main as may be necessary. It is recommended that a signaling device be incorporated in the pig for easy location. The pig used by the Contractor must be approved by the Company.

208.02 Care must be exercised during the pigging operation to prevent the pressure from exceeding the design pressure of the main.

208.03 The Contractor shall install a device to restrain and retain the pig upon exit from the main such that injury or damage to persons or property will be prevented. Any device judged unsuitable by the Company may be rejected.

209 PIPE TESTING (FR 192.507, .509, .619; ANSI 841.3, .42, .43, .44, .5, 845.22)

209.01 New mains shall be tested after construction and before being placed in operation to demonstrate gas tightness and structural integrity.

209.02 All steel welded main shall have a design operating pressure of 75 psig, be qualified for a Class 4 location as defined by the Register, and be tested to a minimum pressure of 150 psig, unless otherwise specified.

209.03 Testing procedure shall be by either standup static test or by direct inspection methods as designated in the Job Specifications.

209.03.1 Standup static testing prodecure shall require a minimum of 24 hours, after compression, for stabilization, and a static period of an additional 24 hours. The temperature and pressure shall be recorded immediately after the initial compression, after the 24-hour stabilization period, and after the 24-hour static test period. Pressures adjusted for temperature differential must remain static over the test period.

209.03.2 Direct inspection testing procedure shall require that all welds and mechanical connections be soap tested by thoroughly soaping the area and determining that no leaks are evident. During the test, the soaped area must be thoroughly shielded from wind or other disturbances. A standup period, at the required test pressure, must be maintained for a minimum of one hour prior to initiation of the test.

209.03.3 The pipe should be open and free to the test when possible.

209.04 The test medium shall be air, inert gas (N2 or CO2), or any combination thereof, unless otherwise specified.

209.05 Costs shall be borne by the Contractor for repair of defects disclosed by testing, and any further testing necessitated thereby, except that the Company shall assume responsibility for defects which are shown to be solely attributable to materials which the Company has supplied.

209.06 All temporary connections to the line shall be repaired to the satisfaction of the Company.

210 PADDING AND BACKFILL (FR 192.319; ANSI 841.273)

210.01 Backfill must be performed in a manner to provide firm support under the pipe. Care shall be used to prevent damage to the coating, by such means as the use of rock-shield material, or by making the initial fill with rock-free material to a sufficient depth over the main to prevent rock damage. (See Subsection 210.08)

210.02 Where it is indicated that soil conditions will be unstable, a clean backfill material must be provided around the pipe to provide continuous support along the section. (Clay soils can undergo severe volume changes resulting in soil plasticity with corresponding shifting and heaving producing increased secondary stresses on the pipeline.)

210.03 The Contractor shall provide all equipment necessary to place padding and backfill. Padding material shall be uniform natural bank sand, graded from all particles sizes smaller than the No. 10 sieve and coarser than a No. 200. Backfill material shall consist of natural bank gravel having durable particles graded from fine (greater than No. 200) to coarse (2-inch) in a reasonable uniform combination with no boulders or stones larger than 2-inch in size. Padding and backfill material must be free of lumps, frozen material, cinders, ash rubbish, paving material, clay, loam, rocks and any other material which might subject pipe, associated equipment, or coating, to injury. All padding and backfilled material must meet the approval of the Company. All wood used for blocking or shoring must be removed from the trench prior to the backfill operation.

210.04 Where suitable material, approved by the Company, for either padding or backfill is available along the line of traverse, the Contractor shall haul and place such fill under the contract price without extra cost. Where suitable fill is not available from excavated materials, by the sole determination of the Company, the Contractor shall procure, haul, and place suitable gravel to the satisfaction of the Company.

210.05 The Contractor shall submit a unit price for gravel fill, purchased, hauled, and placed, and shall be entitled to payment determined as the product of said price quotation and placed quantities only when such quantities are appropriately measured or otherwise accounted for at delivery and approved by the Company as correctly received. Gravel needed to replace fill which has been excavated from the trench and made unusable, in the opinion of the Company, due to failure by the Contractor to exercise reasonable care to save such otherwise usable fill in accordance with these specifications, and gravel to fill that portion of a trench opening which exceeds the width of the nominal run of the trench or the maximum trench width otherwise specified, whichever is the lesser, will be provided by the Contractor without extra cost, unless previously and specifically agreed to by the Company.

210.06 Where the Contractor fails to specify a unit price for gravel fill as an extra in his original quotation, no payment will be allowed.

210.07 Where padding is necessary in the opinion of the Company, it shall be placed in the trench bottom to a minimum depth of four inches (4") and to a minimum dimension of six inches (6") elsewhere around the pipe so as to completely encase and protect the pipe, piping materials, and coating from injury.

210.08 Wherever, in the opinion of the Company, the conditions of trench and surroundings is such that damage to any coating used would result from using machine methods of placing backfill to a depth of six inches (6") above pipe, Contractor shall place same by hand shoveling. This backfill, to a depth of six inches (6") above the top of appurtenances along the top of the main, shall be

placed as soon as possible after the pipe has been lowered in the trench.

210.09 Backfill shall be carefully placed under the main and any appurtenances, and compaction of the backfill to the original density is required by wetting and/or tamping by six-inch (6") layers to a level six inches (6") above the top of appurtenances along the top of the main. Similar compaction of the remainder of the trench shall be performed if required by local governmental authorities.

210.10 Whenever crossing under an existing Cast Iron or Ductile Iron main is required, the backfill material below the Cast Iron or Ductile Iron main shall be compacted to its original density by wetting and tamping in four-inch (4") layers to a level six inches (6") above the top of appurtenances along the top of the main.

210.11 The trench shall be backfilled to a point of within ten feet (10') of the end of the completed main installed each day. The trench may be left open overnight, to the extent necessary to permit testing by direct inspection methods, provided the amount is not in excess of that allowed by local governmental authorities.

211 RESURFACING

211.01 All roadway paving, sidewalk resurfacing, backfilling and compaction shall conform to local Township, Town, City, State or Federal specifications as required.

211.02 All resurfacing shall be kept in repair by the Contractor for two years. If settling or any other defect is evident, the Contractor shall make repairs at his expense until the resurfacing is determined acceptable by all governmental bodies concerned.

212 PURGING (FR 192.629, .751; ANSI 841.28)

212.01 A minimum of two (2) tested gascopes are required for each test when purging. Continuous sampling with two (2) gascopes at each location is required during each purge and all welding and cutting operations.

212.02 Purging During Welding and Cutting Operations

212.02.1 If no gas is detected on the L.E.L. scale of either of two (2) gascopes, or the reading is below 10% L.E.L., it is safe to proceed without adding nitrogen.

212.02.2 If gas is detected and complete shut-off is impossible or impractical, nitrogen must be added either upstream or downstream of the welding or cutting operation until the combustible gas concentration of the mixture is decreased to a point where the admixture of any additional amount of air will not result in a flammable mixture.

212.02.2.1 If nitrogen is added downstream of the welding or cutting operation, it is safe to proceed only when sufficient nitrogen has been added to reduce the L.E.L. readings taken upstream of the welding or cutting operation with two (2) gascopes, to below 30% L.E.L. in nitrogen

212.02.2.2 Although it is normally preferred that nitrogen be added downstream of the welding or cutting operation, specific conditions may require that nitrogen be added at an upstream location. If nitrogen is added upstream of the welding or cutting operation, it is safe to preceed only when sufficient nitrogen has been added to reduce the L.E.L. readings taken downstream of the welding or cutting operation with two (2) gascopes, to below 20% L.E.L. in nitrogen.

Revision Section	Date	By
210.03	1/18/88	PGR
206.01.4	3/26/92	JMP

TWO WIRE TEST STATION WITH ANODE(S)

Can be installed without anodes

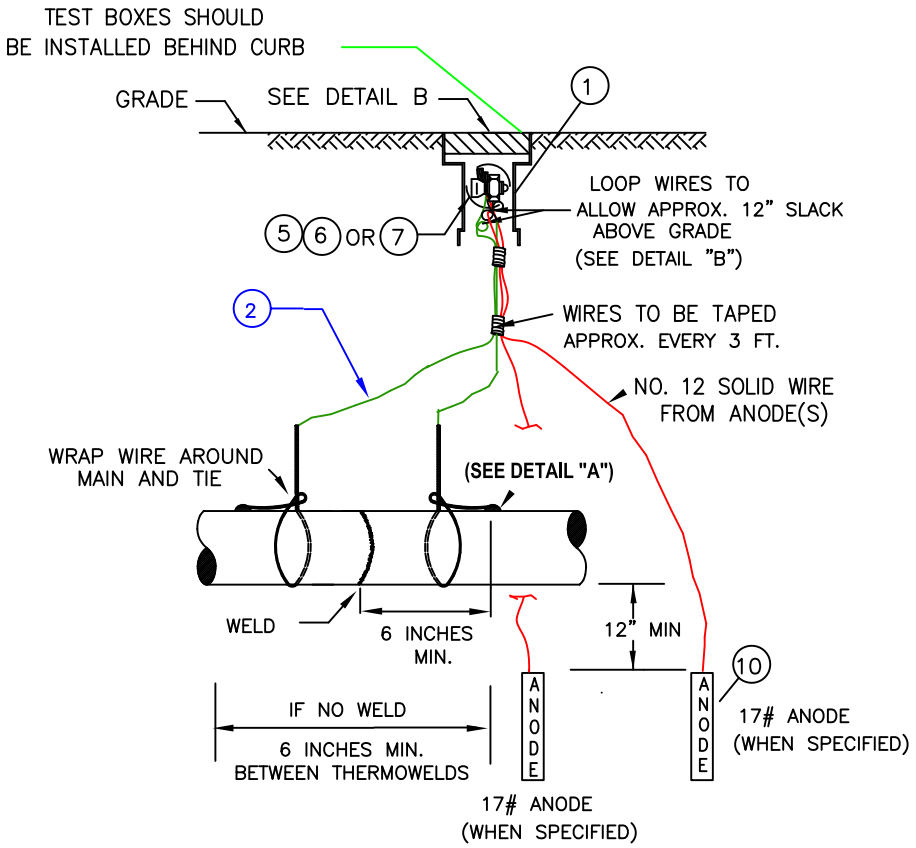

FOUR WIRE TEST STATION WITH ANODES

Can be installed without anodes

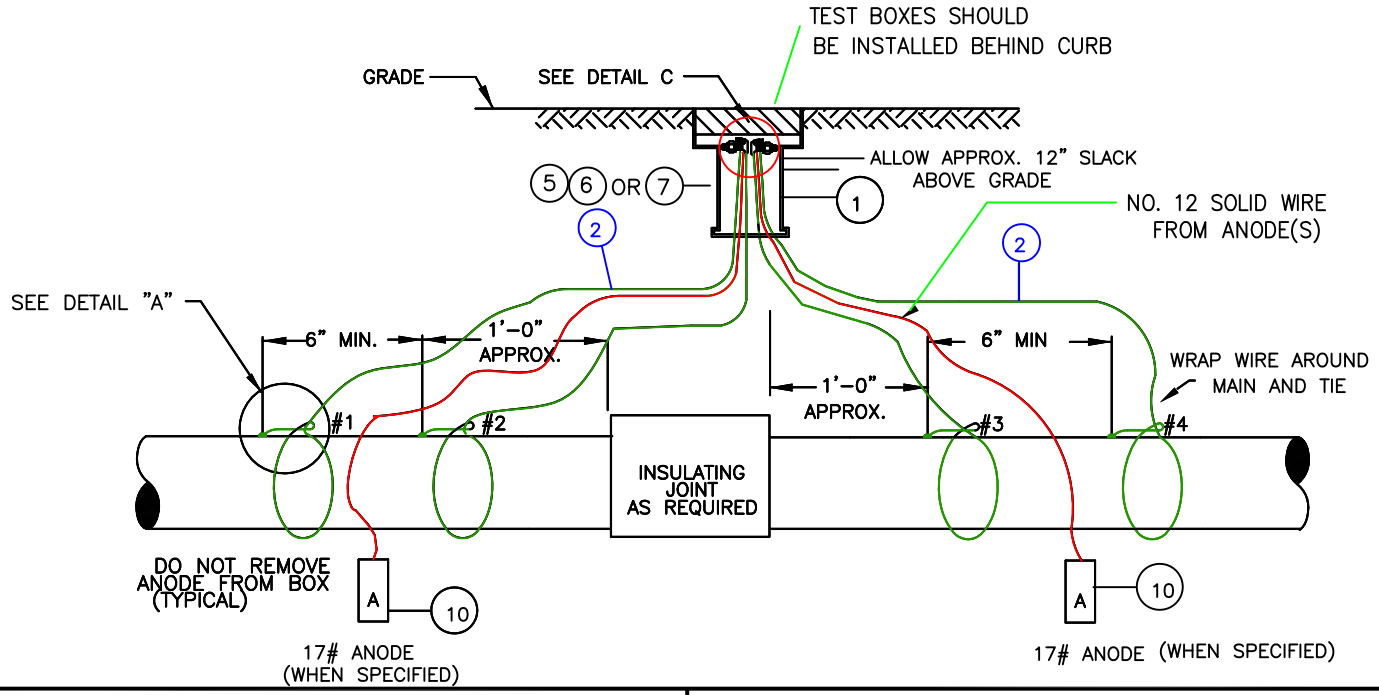

nationalgrid

ALL REGIONS

INSTALLATION OF TEST STATIONS FOR CATHODIC PROTECTION

REVISIONS: ADDED CASING TEST STATION DETAILS

DATE: 07/15/2010	EFFECTIVE DATE: 09/15/2011
DESIGN: PG	STD. DWG. NO. 030026-CS
APPROVED: PS	

© National Grid Gas plc 2011– All Rights Reserved

CASING TEST STATION

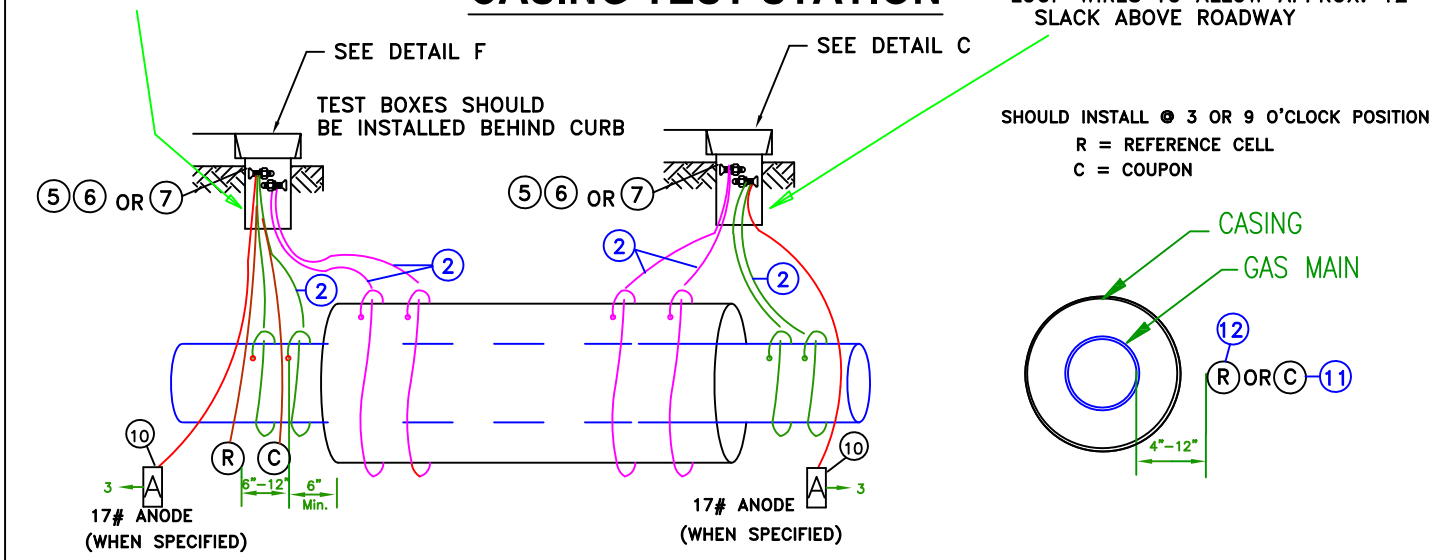

ABANDONED MAIN IN STRAY CURRENT AREAS

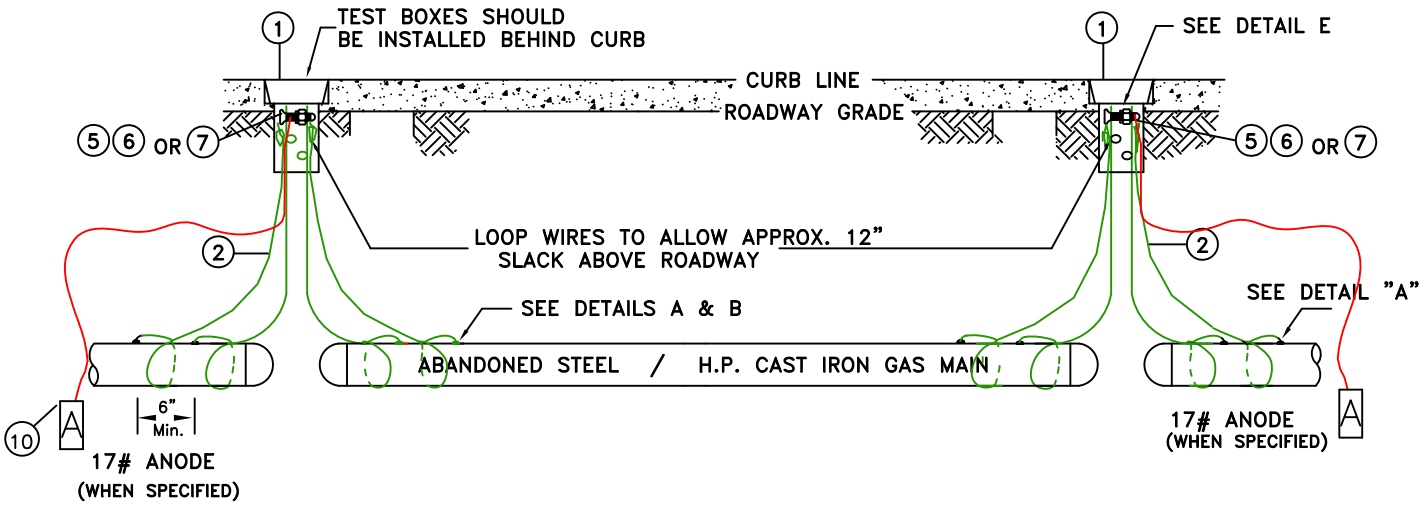

BOND WIRE TEST STATION

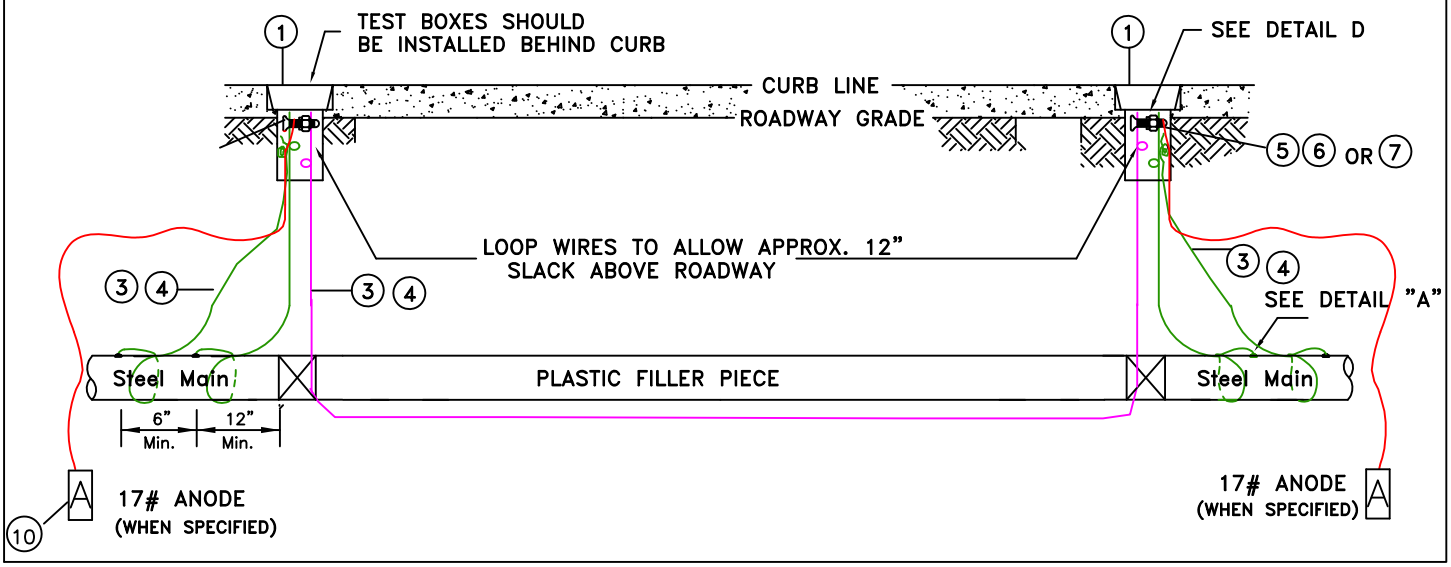

SHT. 2 OF 5 030026-CS

CURRENT DROP MEASURING TEST STATION

R-1

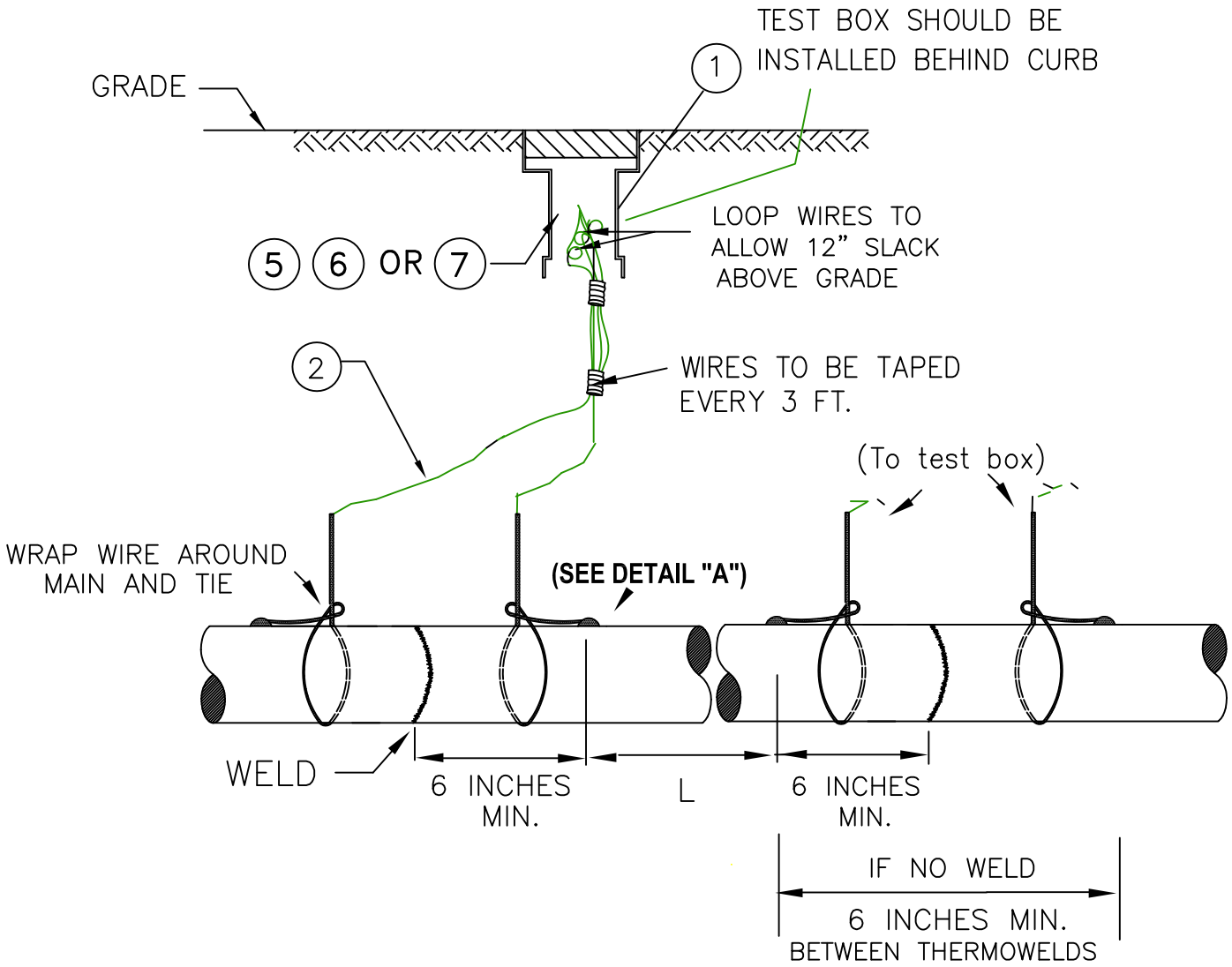

CURRENT DROP MEASURING TEST STATION SPACING

PIPE DIAMETER	"L"
3/4" – 4"	75'
6" – 10"	100'
12" AND OVER	125'

SHT. 3 OF 5 030026-CS

ATTACH WIRE IN ACCORDANCE
WITH APPROVED THERMOWELD PROCEDURE

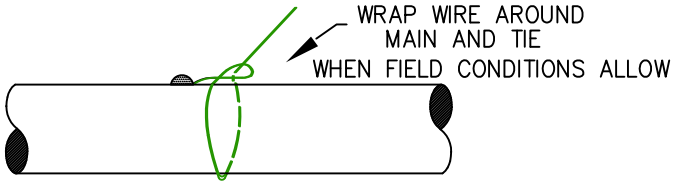

DETAIL "A"

Two wire test station

Shown with 2 anodes

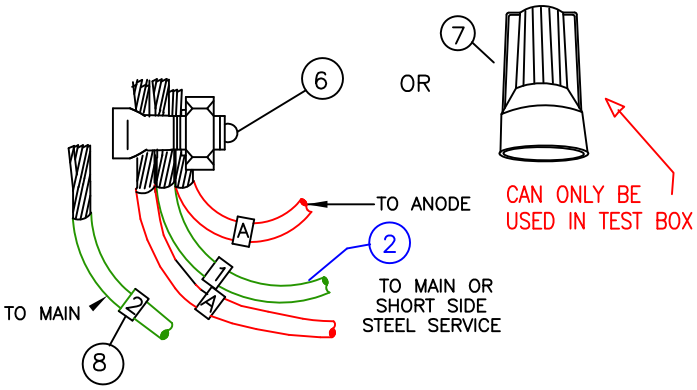

DETAIL "B"

Four wire test station

CONNECT ALL WIRES AS NEEDED

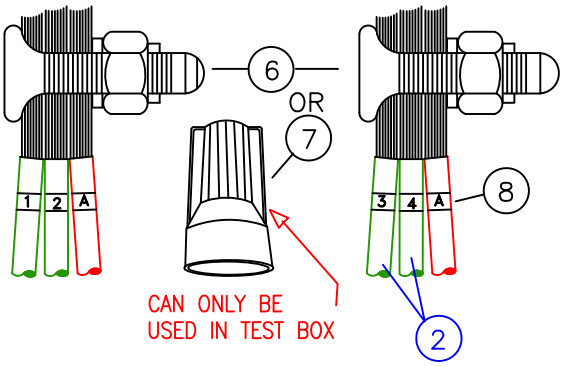

DETAIL "C" (typ)

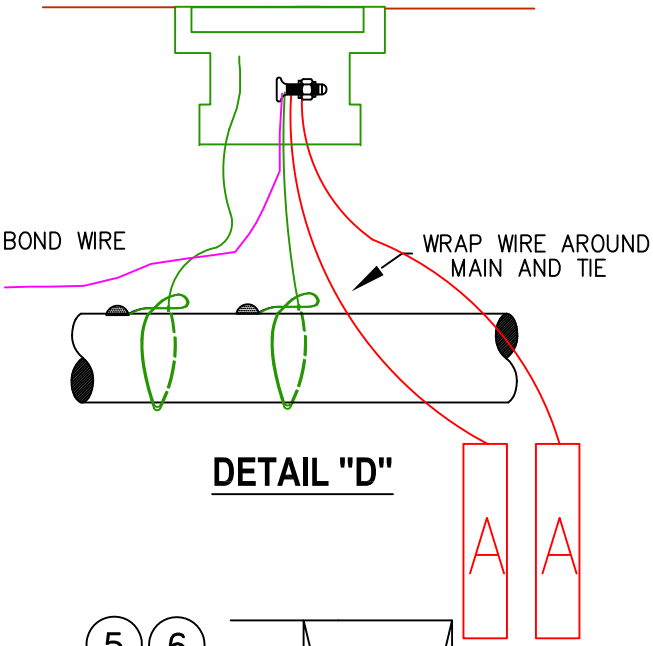

DETAIL "D"

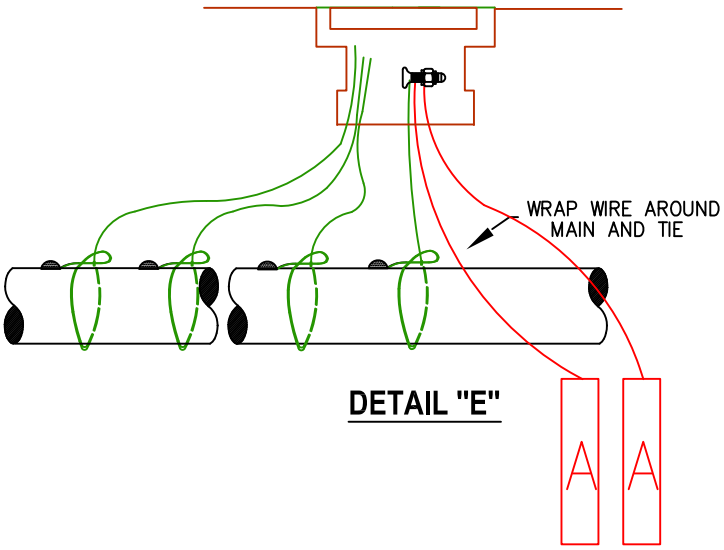

DETAIL "E"

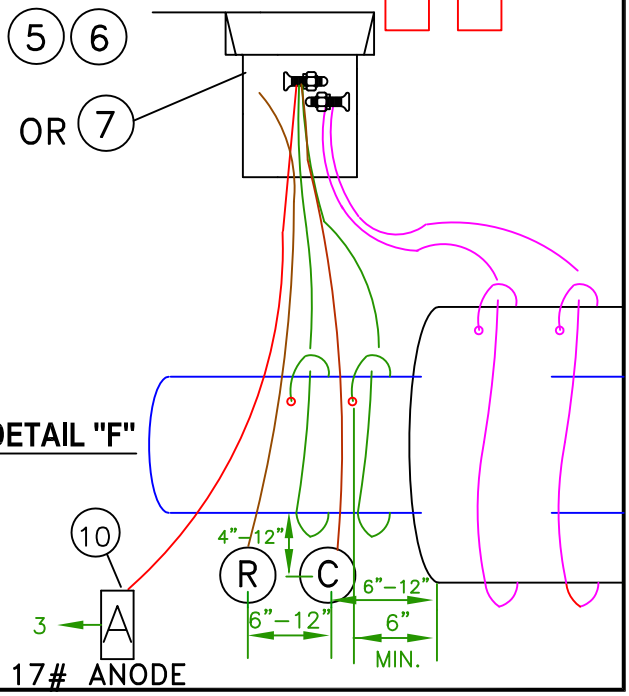

DETAIL "F"

MATERIAL LIST

	Description	Down State ORACLE Item I.D	Upstate PEOPLE SOFT Item I.D	New England ORACLE Item I.D	Rhode Island PEOPLE SOFT Item I.D	MATERIAL NOTES
1	TEST BOX WITH COVER TEST BOX 9" SQUARE HEAVY DUTY COVER FOR 9" SQUARE BOX	00308058 00303157 00308014	60-08-344 UPSTATE BOXES COME IN ONE PIECE	00308058 00303157 00308014	4800898 (NM - 4) in Cumb & 4800895 (Sm - 445) or 4800897 (Lg - 556) in Prov	NON LOCKING COVER. DISCARD FOOT PIECE. WEIGHS 95 LBS, STREET USE, WITHOUT COVER NON-LOCKING COVER
2	WIRE, NO. 8, 7 STRAND	00199229	9202887	00199229	9202887	TEST WIRE ONLY, NOT FOR GROUND BEDS, UPSTATE AND RI WIRE HAS 19 STRANDS.
3	WIRE, NO. 6, 7 STRAND	00199002	9202901	00199002	9202901	BOND WIRE ONLY, NOT FOR GROUND BEDS
4	WIRE 1/0 – 19 STRAND 600 V –1/C	00199429	NON STOCK	00199429	NON STOCK	USE IN STRAY CURRENT AREAS
5	TAPE, PVC - ¾" WIDE	00189008	2005620	00189008	2005620	NOT FOR PIPE COATING.
6	CONNECTOR, SPLIT BOLT, TYPE 6 CONNECTOR, SPLIT BOLT, TYPE 1/01 7 CONNECTOR, TWIST-ON WIRE NUT	00124003 00124018 00125663	20-14-471 0811102	00124003 00124018 00125663	NON STOCK 0811102	USE WITH NO. 6 CABLE USE WITH 1/0 CABLE
8	TAG, ADHESIVE NUMBER 1 NUMBER 2 NUMBER 3 NUMBER 4 LETTER A	 00339001 00339002 00339003 00339004 00339007	 9202349 9202350 9202351 9202352 9020353	 00339001 00339002 00339003 00339004 00339007	 9202349 9202350 9202351 9202352 9020353	LABEL WITH #1 (N) OR (E), CONSECUTIVELY TO (S) OR (W) SEE DETAILS "B" AND "C" USE TO LABEL ANODES
9	GROUNDING CELL	NON STOCK	60-10-761	NON STOCK	NON STOCK	AS SPECIFIED BY CORROSION ENGINEERING
10	ANODE, MAGNESIUM 17LBS	00304001	48-00-460	00304001	48-00-460	SATURATE WITH WATER BEFORE BACKFILL. ANODE MAY BE INSTALLED VERTICALLY OR HORIZONTALLY.
11	COUPON	00304031	By Corrosion	00304031	By Corrosion	MC MILLER OR EQUAL
12	REFERENCE CELL	00304030	By Corrosion	00304030	By Corrosion	BORIN MFGR INC OR EQUAL

© National Grid Gas plc 2011 – All Rights Reserved

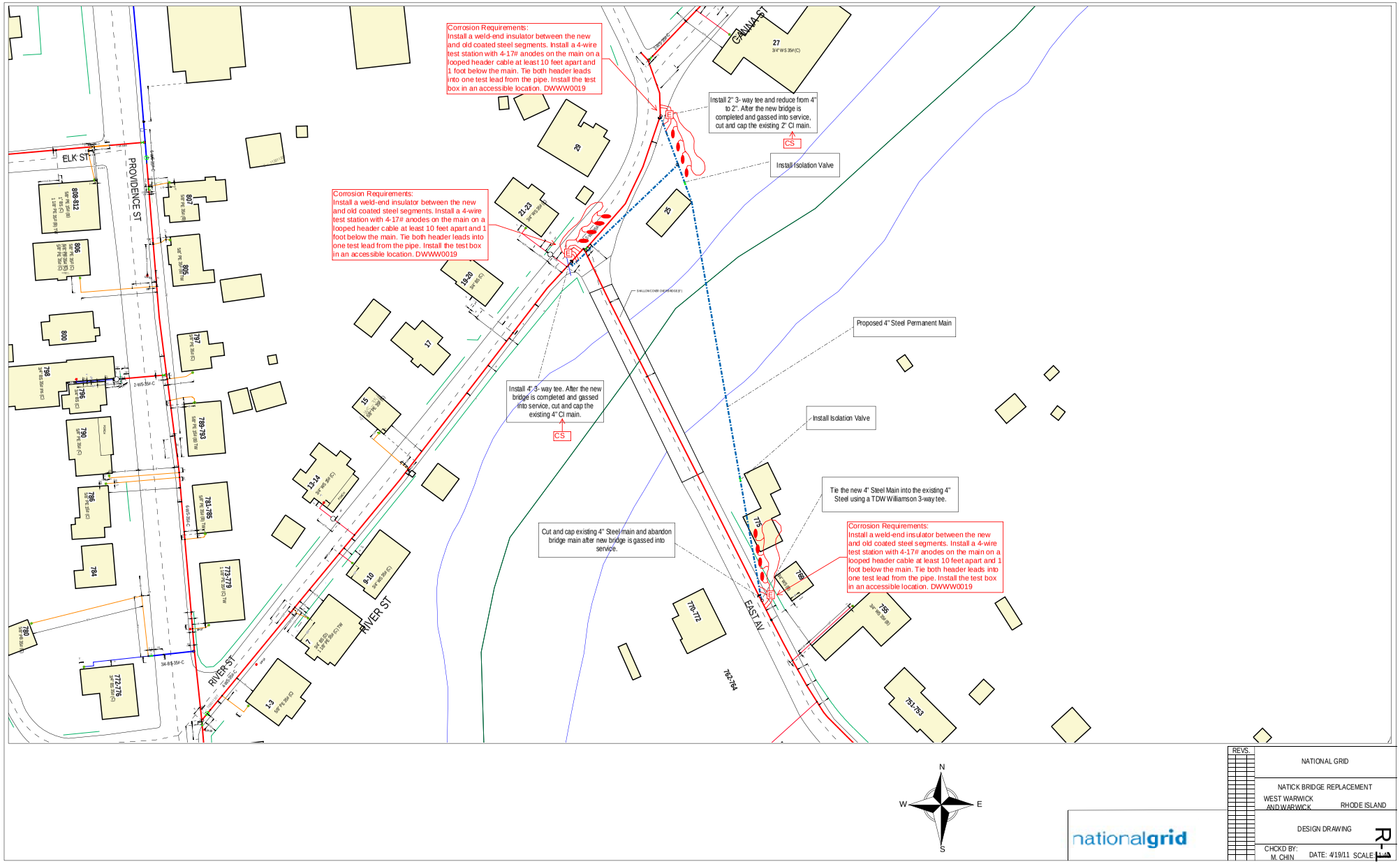

REVS.	
	NATIONAL GRID
	NATICK BRIDGE REPLACEMENT
	WEST WARWICK AND WARWICK RHODE ISLAND
	DESIGN DRAWING
	CHCKD BY: M. CHIN DATE: 4/19/11 SCALE:

nationalgrid

R-1

[This page intentionally left blank]

[This page intentionally left blank]

CODE 841.9901 DRILLED SHAFT - FURNISH AND INSTALL IN SOIL
CODE 841.9902 DRILLED SHAFT - OBSTRUCTION REMOVAL
CODE 841.9903 DRILLED SHAFT – FURNISH AND INSTALL ROCK SOCKET

DESCRIPTION

The Work includes the construction of steel cased, 4-foot diameter cast-in-place concrete-filled straight drilled shafts with steel reinforcement, in accordance with the Rhode Island Department of Transportation Standard Specifications for Road and Bridge Construction and these Special Provisions. The drilled shafts are to be advanced into bedrock with a 3'-6"diameter rock socket. The drilled shafts are to be constructed at the location designated on the Plans.

The area available to the Contractor for laydown shall be proposed by the Contractor and reviewed by the Engineer.

The drilled shafts will consist of a permanently cased section extending from the design cut-off elevation to the top of the bedrock. The remainder of the drilled shaft rock socket length shall be uncased to the minimum depths shown on the plans or as directed by the engineer to support the design loads in the site specific Bedrock formation encountered at the individual drilled shaft locations.

The Drilled shafts shall be installed in accordance with the Contractor's proposed installation procedures that shall be designed to maintain a stable excavation during drilling, excavating, placement of reinforcement and concrete. The procedures shall be submitted for review by the Engineer. Following excavation and shaft bottom preparation, Contractor shall perform inspections to determine the cleanliness of the shaft bottom and measure the diameter and verticality of the shaft over the entire length of the rock socket. Contractor shall submit the results of shaft monitoring prior to the placement of reinforcement.

The Drilled shaft is planned in close proximity to the existing Natick Bridge and an existing underground water main. Subsurface information is available on the general site in the Preliminary Geotechnical Report prepared for the site (see section below on Reference Documents). Additional subsurface information (borings at the drilled shaft locations) shall be obtained by the Contractor at the Drilled shaft locations prior to installation of the Drilled shafts.

General

A. The Work of this Section also includes but is not limited to the following:

1. Excavation, backfilling, and disposal of obstructions encountered within the limits of the Drilled shafts construction, in accordance with the

requirements of the State Standard Specifications and these Special Provisions.

2. Providing and installing permanent steel casing, structural concrete, and reinforcing steel to the depths shown on the Plans.

3. Containment, control, transportation and legal off-site disposal of excavation materials from the Drilled shafts and rock sockets. All soil and rock cuttings shall be disposed of in a licensed landfill facility in accordance with all Federal, State, and Local regulations. Drilling mud or excavated materials shall not be disposed of in the Pawtuxet River nor on-site.

4. Contaminated soils, if encountered, shall be excavated, segregated from uncontaminated soils, managed on-site and disposed of in accordance with applicable State Standard Specifications and Special Provisions as described in Item Codes 202.9901, 202.9902, 202.9903, 202.9904, 202.9905, 202.9906, 202.9907, 919.9910 and 919.9911, and with applicable Federal, State and local laws, regulations and ordinances and as directed by the Engineer. Similar management practices of potentially contaminated groundwater shall be performed by the Contractor if encountered.

5. Maintenance of a stable excavation during drilled shaft excavation and construction.

6. Supply, circulation, maintenance, and disposal of slurry or other drilling fluid in accordance with all applicable federal, state, and local laws, regulations, and ordinances.

7. Removal and legal off-site disposal of excess steel casing and concrete overpour or other irregularities which interfere with other structural elements, utilities, or other planned construction.

8. Furnishing and installing tubes for Crosshole Sonic Logging (CSL) in the Drilled shafts to verify proper shaft construction techniques, concrete consolidation, curing and placement and integrity of the concrete in the drilled shaft foundation, and to determine the extent and location of any defects or internal voids in the shaft interior, shaft perimeter integrity, transverse checks, soil intrusions, and weak concrete or grout. The Contractor is responsible for protection of CSL access tubes during all phases of shaft construction. Damaged or otherwise inaccessible/blocked access tubes must be corrected or replaced at the Contractor's expense, including required coring of the shaft to provide access for CSL logging. The Engineer will perform the CSL measurements. The Contractor shall provide assistance and access for the Engineer to the interior of the shaft so that the Engineer can obtain measurements safely. The CSL tubes shall be installed to align vertically.

9. If dewatering is required, the Contractor shall be responsible for all coordination with RIDOT, the RI Department of Environmental Management (RIDEM), all utility companies and municipal or other agencies, including agencies governing the discharge of water from dewatering operations. Any dewatering operations will be at no additional cost to the State.

B. Related Work Specified Elsewhere:

1. Code 202.9901 – Handling, Hauling, and Stockpile Management of Contaminated Soils and Unclassified Soils
2. Code 202.9902 – Load, Haul and Dispose Soil, Type A
3. Code 202.9903 – Load and Haul Contaminated Soil, Type 1B
4. Code 202.9904 – Disposal of Contaminated Soil, Type 1B
5. Code 202.9905 – Load and Haul Contaminated Soil, Type 2
6. Code 202.9906 – Disposal of Contaminated Soil, Type 2, and Item
7. Code 202.9907 - Load, Haul and Disposal Contaminated Soil, Type 3
8. Code 919.9910 – Decontamination of Tools, Casings, and Drill Rig
9. Code 919.9911 - Disposal of Contaminated Fluid and Contaminated Drill Cuttings
10. Code 804.9930 - Cased Soil Boring
11. Code 804.9931 - Rock Coring
12. Code 804.9932 - Split Spoon Soil Samples

C. Hydrostatic Pressures:

1. The Contractor shall develop and implement appropriate means to satisfactorily manage hydrostatic conditions to minimize impacts to the work during foundation installation.

D. Protection of Adjacent Property and Utilities:

1. The Contractor shall protect adjacent structures (above ground and buried) from damage associated with the drilled shaft installation and its other construction operations. Damage due to construction activities shall be repaired immediately by the Contractor at its own expense, and to the satisfaction of the State and the Utility Owner.

Lines and Grades

A. The Contractor shall locate the drilled shafts and establish all elevations required. Benchmarks located on or close to the site will be provided by the Engineer, as shown on the Plans. The Contractor shall be responsible for the maintenance and protection of the benchmarks, and all location stakes.

B. The Contractor shall employ a Professional Land Surveyor registered in the State of Rhode Island who shall establish lines and levels. The Contractor shall be responsible for establishing the location of the drilled shafts with the approval of the Engineer. Location of the center of completed drilled shafts shall be shown on a drawing in relation to the design location and submitted to Engineer within two (2) working days after completing the unit. Drawings certified by the Contractor's surveyor shall include the following:

1. Baseline and north arrow.
2. The drilled shafts clearly identified.
3. Deviation in inches, to the nearest one-half inch, from plan location at cutoff elevation.

Product Delivery, Storage and Handling

A. The Contractor shall deliver materials and equipment at approved times and in sequence to assure continuity of drilled shafts installation and other work.

Submittals

A. The Contractor shall submit the information specified to the Engineer in accordance with the specifications. No work shall commence until the specific required submittal has been received, reviewed and approved by the Engineer.

B. Submit for review, names and qualifications of the Contractor/Subcontractor's engineers and superintendents responsible for the Work specified. The submittal shall document, by resume and project lists, that the Contractor's engineers and superintendents each have a minimum of five (5) years experience for the work specified in this Section. Submitted resumes and project lists shall include a description of formal training and experience, including a general description of subsurface soil encountered, drilling equipment and list of a minimum of three (3) projects successfully drilled to the diameter range and depth required on this project in the last 5 years.

C. Submit shop drawings in accordance with these Special Provisions. Submit materials data in accordance with the State Standard Specifications.

D. Submit site plan including the method to access the site (timber cribbing, etc.), proposed equipment laydown area, method to secure the area from unauthorized access, and method to temporarily support equipment. This plan will be subject to permit agency review and acceptance. The Contractor shall be aware of the governing permitting agencies stipulations and requirements prior to making their submittal. If requested by the permitting agencies, the Contractor shall modify their proposed methods at no additional cost to the project.

Submit a detailed description of work that shall at a minimum address each of the following items of work: Details of proposed equipment, methods and sequence of operations to be used to install casings, excavate soil and maintain a stable excavation, removal and disposal of obstructions within the limits of the shaft excavation, clean the shaft walls and bottom such that less than 3-inches of loose, soft material remains, monitor the diameter and plumbness of shafts, produce, maintain, mix, circulate and reclaim slurry to successfully maintain a clean bottom and to remove soil cuttings from the borehole, and install reinforcing steel without damaging the excavated sidewalls of the drilled shaft, place concrete by continuous tremie methods such that no defects or voids occur in the concrete column, use means and methods reviewed and approved by the Engineer to successfully separate the drill slurry from the concrete during tremie pours, and backfill. The submittal shall include provisions for protecting the existing bridge, adjacent residential structures and property, and area utilities during drilled shaft installation.

Submit the type of proposed access tubes and associated materials to prepare drilled shafts for CSL. Submit the type and installation of any jointing section to extend CSL tubes or instrumentation housings. Submit shop drawings detailing installation of materials. Submit procedures and shop drawings detailing proposed means of protecting and maintaining the specified spacing of CSL access tubes and instrumentation housings during drilled shaft installation. Particularly in the rock socket below the bottom of the reinforcing cage.

E. Submit welding procedures and qualifications of welders and tackers as specified in AWS D1.5 for casing steel and AWS D12.1 for reinforcing steel.

F. Submit slurry data from the supplier giving the recommended physical and chemical properties of the slurry, the proposed slurry mix design and additives if any, details and description of slurry equipment and overall plant operation. During construction, furnish the results of quality control tests performed on the slurry promptly after the tests are completed. Submit record copies each week. Submit shop-drawing details for management of disposal of slurry. Submit information on the proposed off-site facility for disposal of spent slurry. Mineral/polymer blended slurries are not permitted.

G. Submit test reports and installation logs as specified herein and in DESCRIPTION, Record Information. Submit proposed installation log forms for acceptance.

H. Submit description of monitoring such as with the Shaft Inspection Device (SID) or equivalent and method of providing and checking the cleanliness of shaft bottoms and identifying type of bearing material for consistency with design assumptions prior to placing concrete.

I. Submit method of monitoring and continuously maintaining slurry level in the Drilled shafts.

J. Submit method of monitoring verticality of the shaft excavation in two principal perpendicular planes during excavation and details of proposed corrective measures to be implemented as necessary. For personnel who will perform verticality monitoring, submit documentation of training by the manufacturer in the use of the device or instrumentation to monitor verticality.

K. Submit method of measuring diameter of the shaft excavation in the rock socket after excavation (such as sonic caliper technology or equivalent). For personnel who will perform the diameter monitoring, submit documentation of training by the manufacturer in the use of the device or instrumentation to monitor diameter with shaft depth.

L. Submit method of placing, securing and maintaining position of steel reinforcing centered in the drilled shaft.

M. Submit method of placing concrete, including number, location, and details of tremie pipes.

N. Submit record information as specified in DESCRIPTION, Record Information.

O. Submit remedial action plan including calculations, method and materials necessary to complete corrections for out-of-tolerance drilled shaft foundations.

P. Submit details of proposed equipment, methods and sequence of operations to remove and dispose of obstructions.

Q. Submit concrete mix design, trial batch reports and laboratory test data. The submittal shall be made on Department forms in accordance with State Standard Specification Section 601

R. Submit grout mix design, trial batch reports and laboratory test data. The submittal shall be made on Department forms in accordance with State Standard Specification Section 601.

S. Submit plan for handling, control, on-site and off-site management of excavated soils, rock and groundwater and the proposed disposal site for excavated soils, rock and groundwater.

T. At the completion of drilled shaft operations and at least five (5) working days prior to removal of drilled shaft equipment from the site, submit a final as-installed drilled shaft location plan, indicating surveyed location, shaft designation, shaft bottom elevation, permanent steel casing tip elevation and cutoff elevation, certified by a Registered Professional Engineer currently licensed in the State of Rhode Island.

Tolerances

A. Drilled Shaft diameter: Minimum diameter shall not be less than specified; maximum diameter shall not exceed the specified diameter by more than 3 inches. No additional payment will be made for constructing diameters larger than 4 foot diameter shown on the plans.

B. Drilled Shaft Rock Socket diameter: Minimum diameter shall not be less than specified; maximum diameter shall not exceed the specified diameter by more than 3 inches. No additional payment will be made for constructing diameters larger than 3 foot 6 inch diameter shown on the plans.

C. Drilled shaft Rock Socket bearing elevation: Rock sockets shall be drilled to within 6 inches of the specified bearing elevation as determined by the Engineer using the construction phase boring data. No additional payment will be made for embedment below the specified bearing elevation as determined by the Engineer using all data available at the time of construction.

D. Maximum variation from vertical: 1:100.

E. Elevation of the top of shaft: Within 3 inch of preliminary cut-off elevation given on the Plans.

F. After all concrete is placed, the top of the reinforcing steel cage shall be no more than 6 inch above and no more than 3 inch below plan position.

F. Excavation equipment and methods shall be designed so that the completed shaft excavation will have a planar bottom. The cutting edges of excavation equipment used to prepare the final drilled shaft tip configuration shall be normal to the vertical axis of the equipment within a tolerance of (+/-) 3/8 inch per foot of diameter.

G. Volume of concrete placed shall be compared to the theoretical volume required to fill a unit length of shaft. Comparison shall be made at the top of the rock socket and at the third point along the length of the shaft. Top of shaft shall be the final point of comparison. Actual versus theoretical rise in concrete level shall be reported immediately to the Engineer. Dimension and quality of concrete shall be evaluated by CSL testing.

Record Information

A. For each drilled shaft installed, record on drilled shaft installation log the location, alignment, dimensions, elevations of top and bottom, depth of bearing stratum penetration, description of materials encountered at all elevations, elevation of water table and drilling fluid during excavation, condition of bottom of excavation, slurry test data, concrete data, verticality and deviation from plan location, and other data called for on the report form or pertinent to the drilled shafts. Include results of bottom shaft, diameter, and verticality monitoring. Record the theoretical volume of excavation, volume of concrete placed vs. depth, and total volume of concrete placed. Provide a plot of actual concrete volume versus theoretical volume and actual rise of concrete in the shaft. Report observed irregularities to the Engineer within 24 hours of discovery.

B. Submit draft record information for each completed drilled shaft weekly. Submit final record drawings for each drilled shaft no more than one week after completion of the Work.

C. Maintain daily job records of mineral or polymer slurry testing performed under CONSTRUCTION METHODS, Control Testing of Slurry. Submit records on a weekly basis, and more frequently if variations occur or if required by the Engineer.

Quality Assurance

A. Comply with all rules, regulations, laws and ordinances of the State of Rhode Island and Towns of Warwick and West Warwick, OSHA and of all other authorities having jurisdiction. All labor, materials, equipment and services necessary to make the work comply with such requirements shall be provided without additional cost to the State. Comply with all soil, rock and groundwater handling and disposal regulations for the State of Rhode Island, Rhode Island Department of Environmental Management, Town of Warwick and West Warwick, and other agencies.

B. Field Monitoring and Testing:

1. The Engineer will provide full-time monitoring and testing of Drilled shafts installation operations. The Contractor shall perform all work related to the installation of the shaft, in the presence of the Engineer.

2. Following excavation and shaft bottom preparation, Contractor shall monitor the cleanliness of the shaft bottom, shaft verticality, and shaft diameter over the entire length of the shaft.

3. The Engineer will follow Section 601 of the State's Standard Specifications during concrete placement. The Contractor shall fully cooperate with the Engineer to facilitate obtaining and storing samples. The Contractor shall ensure a sufficient number of samples are on-hand to provide additional testing in the event initial concrete strength tests reveal less than the minimum required strength.

4. The Engineer will perform on-site CSL testing and monitoring. The Contractor will provide and install tubing/casing for CSL testing as described on drawings. The Contractor shall assist the Engineer and provide access to shafts during testing.

C. Approvals given by the Engineer shall not relieve the Contractor of their responsibility for performing the work in accordance with the Contract Documents, nor shall the approvals be construed to relieve the Contractor from full responsibility for the means and methods of construction and for safety on the construction site.

MATERIALS

Concrete, Grout and Reinforcing Steel

Provide concrete and reinforcing steel in accordance with the requirements of the State Standard Specifications, and the following:

A. The reinforcing steel cage, consisting of longitudinal bars, ties, cage stiffeners, spacers, centralizers, and other necessary appurtenances, shall be completely assembled and placed as a unit immediately after the shaft excavation is inspected and accepted, and prior to concrete placement. The reinforcing cage shall be rigidly braced to retain its configuration during handling and construction. Individual or loose bars will not be permitted. The Contractor shall show bracing and any extra reinforcing steel required for fabrication of the cage on the shop drawings. Temporary internal stiffeners shall be removed as the cage is placed in the excavation so as not to interfere with the placement of concrete.

B. The reinforcing steel in the shaft shall be tied and supported so that the reinforcing steel will remain within allowable tolerances until the design 7-day concrete strength is verified. Concrete spacers or other approved non-corrosive spacing devices shall be used at sufficient intervals (within one foot of the bottom and at intervals not exceeding 10 feet vertically up the shaft) to ensure concentric spacing for the entire cage length. Spacers shall be constructed of approved material equal in strength, quality and durability to the concrete specified for the shaft. The spacers shall be of adequate dimension to insure clearance shown on Contract Drawings

.

C. Provide a concrete mix as specified in Section 601 of the State Standard Specifications, and the General Notes and as follows:

1. Class Self-Consolidating Concrete (SCC).

2. Sand proportion: Sufficient to generate proper flow and placement of the tremie concrete.

3. Slump: 18 to 20 inches $\pm$ 2 in. The required slump range will be accomplished by the addition of a high range water reducing admixture, ASTM C494 Type F or G.

4. Air content: 6 percent plus or minus 1.0 percent, when tested at the point of discharge from the truck mixer.

5. Minimum compressive strength of 4,000 psi at 28 days.

6. Maximum tricalcium aluminate (C3A) content of six (6.0) percent.

7. Concrete mix designs proposed by the Contractor shall be submitted to the Engineer for review and approval. All mixes will be required to comply with State Standard Specification Section 601 and these Special Provisions.

D. Provide a cement water grout mix utilizing Type II cement and water. The cement grout mixture shall have a minimum 7-day compressive strength (f'_c) of 5,000psi.

E. Structural steel shapes shall conform to Section 824 of the State Standard Specifications.

F. Reinforcing steel shall conform to AASHTO Designation M31 (ASTM A615) Grade 60. Mechanical splices (or couplers) shall be used to splice proposed Grade 60 reinforcing steel, the mechanical splice shall be extra length cold forged mechanical connection applied by octagonal ties to achieve at least 125 percent of the yield strength of Grade 60 bar. No lap splices shall be allowed for vertical or spiral drilled shaft reinforcing steel.

Permanent Steel Casing

A. Permanent Casing

1. Permanent steel casing shall be seated in bedrock. After installation is complete, the permanent surface casing shall be cut off at the design elevation and the shaft completed as shown on the Plans and as described in these Specifications.

2. Permanent steel casing shall be ASTM A252 grade 3 steel. The permanent casing wall thickness shall be as required to support soil and water pressures, handling, installation, construction and transportation loads, but not less than 3/8 inch.

3. Permanent casing shall have a minimum diameter of 4 ft and 0 inches.

4. For vertical and horizontal joints in permanent casings, provide full penetration welds which conform to AWS Dl.5 requirements.

Slurry

A. Slurry shall be a stable suspension of mineral or polymer in potable water. Polymer-mineral/bentonite blended slurries are not permitted. The Contractor

shall anticipate encountering soil fill, potentially contaminated groundwater, and other agents that may be deleterious to the slurry. The Contractor is responsible for and shall modify the slurry mix as required so as to maintain a stable suspension at all times.

B. Density of the slurry shall be such that adequate excavation support is provided at all times, and that the slurry will be readily displaced by the tremie concrete.

C. Viscosity of the slurry shall be such that adequate solids suspension is provided at all times in order to remove soil and rock cuttings from the borehole in a timely manner.

D. Additives shall be used in the slurry if needed to maintain the necessary properties as approved by the Engineer. Additives must be approved by the Engineer prior to use in the slurry.

E. Fluid loss in the open borehole shall be limited to a drop in the slurry level of no greater than one inch per hour per 20 feet of excavation depth, and no more than 2 feet total in a 24-hour period.

F. Water used for mix slurry fluids shall be potable. Water from the Pawtuxet River shall not be used.

G. Mineral Slurry

Mineral slurry shall be premixed thoroughly with potable water. Mineral slurry shall be the high swelling, pure, premium grade sodium bentonite-based type. The slurry mix shall not be used until the bentonite mix has been allowed to swell and hydrate in accordance with the time recommendations provided by the mineral manufacturer. Slurry tanks of adequate capacity will be required for slurry circulation, storage, and treatment. Desanding equipment shall be provided by the Contractor as necessary to control slurry sand content to less than 4 percent by volume at any point in the borehole at the time the slurry is introduced. The Contractor shall take all steps necessary to prevent the slurry from “setting up” in the shaft. Such methods may include, but are not limited to: agitation, circulation and/or adjusting the properties of the slurry. All slurry shall be legally disposed at an off-site location approved by the Engineer.

Control tests using suitable apparatus shall be carried out on the mineral slurry by the Contractor to determine density, viscosity and pH. An acceptable range of values for those physical properties is as follows:

1. A suspension of powdered Wyoming or Dakota bentonite, attapulgite or approved equivalent.

2. Density of slurry in the excavation: 65 to 80 pcf.
   Density of slurry prior to concrete placement: 65 to 70 pcf.

3. Viscosity of slurry in the excavation: 30 to 50 seconds by Marsh Cone Method.

4. pH of slurry in the excavation: 7.0 to 11.0.

5. Yield: 90 barrel per ton, minimum.

6. Dwell time in the mixer: 10 minutes, minimum.

7. Storage time to allow hydration: 6 hours, minimum.

8. Sand content: Less than 4 percent by volume, measured within 12 inches of the bottom of the drilled shaft, immediately prior to concrete placement.

9. Fluid loss: 25cc maximum in 30 minutes using a filter press by API 13A.

   Notes:

   a. Tests shall be performed only when the slurry temperature is above 4.5 degrees Celsius (40 degrees Fahrenheit).

   b. If desanding is required, sand content shall not exceed 4 percent by volume at any point in the borehole as determined by the American Petroleum Institute sand content test (API RP 13B-1) when the slurry is introduced.

Tests to determine density, viscosity, and pH value shall be performed during the shaft excavation to establish a consistent working pattern. A minimum of four sets of tests, at least one test every 2 hours, shall be made during the first 8 hours of slurry use. When the results of four consecutive tests show consistent behavior, the testing frequency may be decreased to one set every 4 hours of slurry use.

H. The Contractor shall maintain the level of mineral slurry at not less than 4 feet above the highest observed piezometric pressure head at all times during excavation.

I. Polymer Slurry

Polymer slurry shall consist of either natural or synthetic materials. The polymer data shall be submitted to the Engineer for approval. Slurry properties at the time of mixing and at the time of concreting shall be in conformance with the written recommendations of the manufacturer except that the sand content at

the base of the drilled shaft excavation shall not exceed 1 percent when measured by Method API 13B-1, Section 5, immediately prior to concreting.

The Contractor shall submit for review and approval by the Engineer a detailed report specific to the project prepared and signed by a qualified slurry consultant describing all slurry materials, mix proportions, mixing methods, and quality control methods. The submittal shall include all properties and ranges for density of slurry in the excavation, viscosity of slurry in the excavation, and pH of slurry in the excavation.

PROPERTY	REQUIREMENT	TEST
Density (lb/ft^3) During drilling Just prior to placing concrete	Less than or equal to 64.0	Mud Weight (Density) API 13B-1
Viscosity (sec/qt) during drilling just prior to placing concrete	32-108 less than or equal to 60	Marsh Funnel and Cup API 13B-1 Section 2.2
pH	8.0 to 11.0	Glass electrode, pH meter or pH paper
Sand Content (%) By volume Prior to final cleaning Just prior to placing concrete	Less than or equal to 1.0 %	Sand Content Kit API 13B-1 Section 5
When approved by the Engineer, slurry may be used in salt water. The allowable density may be increased up to 2 pcf. The slurry temperature must be at least 40º Fahrenheit (4º Celsius) when tested.		

J. The Contractor shall maintain the level of polymer slurry at a level not less than 6 feet above the highest observed piezometric head.

Crosshole Sonic Logging

A. Access tubes for Crosshole Sonic Logging (CSL) shall be 2 inch ID, Schedule 40 steel pipe conforming to ASTM A53, Grade A or B Type E, F, or S. The access tubes shall extend the entire length of the shaft to the shaft tip (bottom of drilled shaft/rock socket), have a round, regular internal diameter free of defects and obstructions in the tube and at joints, in order to permit free, unobstructed passage of the source and receiver probes. The tubes shall be watertight and free from corrosion, with clean internal and external surfaces to ensure good bond between the concrete and tubes. The tubes shall be constructed with threaded steel caps at top and bottom ends. The tubes shall be vertical over their entire length. Additional reinforcing/carrier cage shall be provided to the bottom of the Drilled shafts to stabilize and position the access tubes.

Prior to the placement of the drilled shaft concrete the Contractor shall inspect the CSL tubes to confirm that they are continuous and properly installed. If they require any remedial work this shall be performed by the Contractor prior to the placement of concrete at the Contractor's expense.

Prior to CSL testing by the Engineer, the Contractor shall assure that the test probes can pass through every tube to the bottom. If a tube is obstructed, the Contractor shall, at the Contractor's expense, clear the tube by an acceptable means to allow passage of the probe the full length of the tube. If the tube cannot be cleared, the Contractor shall, at the Contractor's expense, core a hole within the shaft near the obstructed tube that is large enough to accommodate the probe for the full length of the drilled shafts.

Excavation Monitoring Devices

A. Provide monitoring devices and qualified technicians for monitoring the following:

Shaft Bottom Cleanliness – use the Shaft Inspection Device (SID) as manufactured by GPE, Inc. of Gainesville, Florida or approved equivalent.

Shaft Verticality measurement device - Provide equipment and a qualified technician for monitoring the dimensions and verticality of drilled shaft excavations. At a minimum, measurements shall be made utilizing equipment attached to the top of the drill rig (Kelly bar).
Shaft Diameter measurement device- Provide equipment and a qualified technician for monitoring the dimensions of drilled shaft excavations. Provide sonic caliper technology or approved equivalent.

CONSTRUCTION METHODS

Slurry

A. Use equipment that produces a stable suspension and provides mechanical agitation. Transport slurry by means of a temporary pipeline between tank locations and the Drilled shafts.

B. Use drilling clean out buckets and slurry screening equipment that is capable of removing soil and rock drilling spoil material from the slurry.

Control Testing of Slurry

A. Perform control testing of mineral slurry in accordance with API Standard RP 13B, “Standard Procedure for Testing Drilling fluids” and witnessed by the Engineer and submission of a Certificate of Compliance as specified herein. If polymer slurry is used, modify the parameters in accordance with the slurry manufacturer’s recommendations. The Contractor or his representative shall have demonstrated experience in testing on at least 3 projects. A summary of the 3 projects shall be submitted to the Engineer for approval.

B. Test the slurry using specified apparatus, to determine the following:

1. Freshly Mixed Slurry. Measure density, pH, and Marsh Cone viscosity of freshly mixed slurry. Perform API fluid loss test on freshly mixed mineral slurry.

    a. Calibrate density measuring devices at the start of the project and monthly thereafter or more often if there is evidence of needed calibration, to an accuracy of ±0.05 PCF.

    b. Perform API fluid loss test in accordance with American Petroleum Institute Standard 13A. Fluid loss shall not exceed 25cc in 30 minutes.

2. Slurry Inside Excavation. Perform tests specified below to verify that properties of slurry inside excavations are within the specified limits.

    a. Obtain samples from the top, middle and bottom of the shaft, and perform the following tests once every 4 hours.

        i. Density, by mud density balance.

ii. Viscosity, by Marsh Cone Method.
iii. pH.
iv. Sand content.

b. Perform fluid loss measurements in the shaft at the beginning or end of every shift, and as directed by the Engineer.

c. Perform API fluid loss test for polymer slurry once every 3 days at times directed by the Engineer. Fluid loss shall not exceed 25cc in 30 minutes.

3. Slurry in Excavation Prior to Placing Concrete. Immediately prior to placing concrete, the Contractor shall take slurry samples using a sampling tool approved by the Engineer and test for density, Marsh Cone Viscosity, pH, and sand content. Slurry samples shall be extracted from the base of the shaft and at intervals not exceeding 10 feet up the slurry column in the shaft until two consecutive samples produce acceptable values for density, viscosity and pH. Slurry shall be circulated and cleaned using an airlift and desanding unit. Modify or replace slurry in the shaft if test parameters of slurry exceed limits specified. Do not place any concrete in the shaft until slurry meets the specified values.

Excavation

A. General

1. Excavate for the drilled shaft using non-displacement methods such as rotary drilling, augering, or other effective methods to advance the excavation through overburden materials and maintain a stable excavation. The rock socket shall be formed by methods such as coring, rotary drilling, chiseling or other methods.

2. Do not allow vibration or excessive wheel loads to affect the drilled shaft during construction.

3. Permanent surface steel casing shall be seated in bedrock by vibratory, drilling or driving methods submitted by the Contractor and reviewed by the Engineer.

4. During excavation prevent instability or displacement of the surrounding earth, excessive water intrusion, or damage from construction operations.

5. Completed shaft excavation shall have a planar bottom around the perimeter of the shaft tip. The bottom of the shaft shall slope uniformly

and shall be free of depressions exceeding 0.25 ft deeper than the adjacent surfaces. The cutting edges of excavation equipment shall be normal to the vertical axis of the equipment within a tolerance of 3/8 inch (+/-) per foot of diameter.

6. Evaluation of the shaft installation at any stage may be made by the Engineer. The Contractor shall measure the depth to the bottom of the shaft bearing stratum at the request of the Engineer to determine compliance with the specification requirements. If it is the Engineer's conclusion, based on the Engineer's observations or other methods, that the bedrock at the foundation bearing level is not capable of supporting the design load, the Engineer may request the Contractor to drill deeper. The Drilled shafts shall not be concreted until the hole has been observed, evaluated, and approved by the Engineer.

7. Upon initial contact with bedrock, regardless of the depth and rock quality, the Contractor shall notify the engineer, who will determine the actual depth.

8. If an obstruction is encountered, the Contractor shall notify the Engineer immediately. Obstructions are defined as natural, man-made, or man-placed objects, materials, or structures, such as granite blocks, concrete, timber, logs, piles, cobbles, or boulders encountered at or below ground surface which unavoidably and completely stop the progress of the shaft excavation or subsurface drilling work for more than one (1) hour per incident, despite the Contractor's diligent efforts, as determined by the Engineer. Such efforts shall include adjustment of drilling rate, down pressure, change of drill tools and use of chisel tools to break past or remove the obstruction. The Contractor shall probe to locate the extent of any obstruction and propose a method of passing or removing it.

9. Obstructions shall not include any item whose penetration, demolition, removal, or excavation is included clearly and expressly in the Work of any other pay item.

   Drilling tools, which are lost in the excavation, shall not be considered obstructions and shall be promptly removed by the Contractor. All costs due to lost tool removal and replacement shall be borne by the Contractor including but not limited to, costs associated with hole degradation due to obstruction removal operations or the time the hole remains open.

B. Groundwater Control

1. Groundwater control shall be provided with the use of drilling slurry and permanent casing, if necessary.

C. Inspection

1. Details of shaft construction shall be recorded on the drilled shaft installation log (to be submitted to the Engineer at the end of the project).

2. The approximate bottom elevation of the Drilled shafts shown on the Plans is based on design criteria developed by the Engineer using subsurface conditions shown on the boring logs. The Engineer may adjust the required bottom elevation based on the elevation and quality of the bearing material encountered during drilling of more recent test borings and during installation of the Drilled shafts. The Engineer shall be the sole judge as to the classification of the material encountered during drilled shaft excavation.

3. Sound, measure and record the depth to the final bottom of shaft in the presence of the Engineer at the following times, to verify that soil or sediment from the sides of the shaft has not fallen into the shaft and collected on the shaft bottom:

   a. Immediately after excavation has been performed to the final depth.

   b. Immediately after the excavation has been cleaned of all loose material and has been desanded.

   c. Immediately prior to placing reinforcing steel in the slurry-filled shaft.

   d. During installation of the reinforcing cage through dedicated access tubes, location and type to be proposed by Contractor and reviewed by Geotechnical Engineer.

   e. Immediately prior to concrete placement.

   f. The average measured depth at each stage shall not vary by more than +0.1 foot or –0.2 foot. A minimum of six, equally spaced soundings shall be recorded and averaged to determine the depth. Measurements exceeding the tolerances shall be investigated by the Engineer. Additional cleaning or drilling shall be completed by the Contractor until measurements satisfy the specified tolerances, at no additional cost to the State.

4. Before placement of reinforcing steel and concrete, ensure that loose material from the bottom and sides of the excavation has been removed and that the shaft is within the specified tolerances. Remove all loose material at bottom of shaft to the satisfaction of the Engineer using a combination of clean-out buckets and airlifts. Document drilled shaft excavation dimensions versus depth and verticality using the specified monitoring device to verify that the shaft is within specified tolerance.

5. If during the placement of concrete a sudden drop in concrete level is detected; or if tremie seal is compromised; or if tremie placement is suspended for more than 2 hours; or if the theoretical volume of concrete deviates more than 10 percent from actual, the shaft shall be cored at a minimum 4 plan locations selected by the Engineer to detect potential voids, unacceptable concrete, or other defects. The coring, and remedial actions needed to correct any voids, unacceptable concrete, or other defects, shall be performed by the Contractor at no additional cost to the State. All cored holes shall be grouted at no additional cost to the State.

D. The Contractor shall be responsible for correcting the Drilled shafts by approved methods if not constructed within the specified tolerances, if required by the Engineer. Remedial measures, including engineering analysis and redesign, to correct for out-of-tolerance Drilled shafts construction, shall be performed at no additional cost to the State.

Installation of Casing

A. Permanent casing shall be required on all drilled shafts.

B. Permanent casing shall be continuously joined.

C. The Contractor shall advance the permanent surface casing and seat in bedrock. The sidewalls of the shaft shall be stabilized by slurry, or by steel casing, or by placement and redrilling of concrete fill, or other means, as selected and implemented by the Contractor after review and approval by the Engineer.

Installation Requirements for Crosshole Sonic Logging

A. Preparation of Crosshole Sonic Logging (CSL) Access Tubes: The access tubes shall be installed as specified and as shown on the approved shop drawings. The tubes shall be securely fastened at 3-foot intervals to the interior of the reinforcement cage in a parallel manner. Immediately after concrete placement of the Drilled shafts, the tubes shall be filled with clean water and capped.

Damaged or blocked tubes must be repaired or replaced (by coring) by the Contractor at no additional cost to the State.

B. The access tubes shall be installed in the Drilled shafts in a regular, vertical, symmetric pattern such that the tube spacing in degrees will correspond to the following criteria:

Shaft Diameter	Number of Tubes	Tube Spacing
4 Ft	4	45°

C. The spacing between the centerline of adjacent tubes shall be recorded at the third points of the reinforcing cage. Measurements shall be recorded to an accuracy of 0.25 inch. Measurements shall be provided to the Engineer prior to placement of the steel reinforcing cage in the shaft.

Installation of Reinforcing Steel

A. If it is not practical to deliver the assembled reinforcing steel to the jobsite as a complete unit ready for installation, make splices on site prior to lowering the assembly into the hole. Provide splices only as shown on the Contract Drawings or approved shop drawings.

B. Prior to installation, inspect and clean reinforcing steel of materials that prevent effective bonding of concrete on steel.

C. Place reinforcing steel in excavation shaft immediately after cleaning the bottom.

D. If the shaft cannot be completely concreted within eight (8) hours of the completion of excavation, the reinforcing steel shall not be placed in the excavation. The slurry shall then be re-circulated and re-cleaned using airlift equipment and a desanding unit immediately prior to placement of the reinforcing steel and concrete.

E. Reinforcing steel shall be equipped with non-corrosive non-metallic centralizers to provide specified minimum concrete cover. Centralizers shall be spaced at intervals necessary to maintain specified cover, but in no case shall the vertical spacing be greater than 20 feet. Dropping or forcing reinforcing steel into the shaft shall not be permitted. If the reinforcing steel does not properly or smoothly enter the excavation, due to misalignment of the reinforcing cage, steel casing, or open borehole, or due to obstructions, the cage shall be fully removed and the excavation adjusted and properly cleaned as specified until the reinforcing fits smoothly. Repair or replace any damaged reinforcing at no additional cost to the State.

F. After installation of reinforcing steel and immediately prior to concrete placement, the bottom of the excavation shall be measured by the Engineer to determine if sediment has accumulated on the shaft bottom in excess of the requirements of these special provisions. If excess sediment is found to have accumulated on the shaft bottom, clean the bottom of the excavation with an air-lift or other equipment which is capable of removing the sediment.

Placing Concrete

A. Place concrete immediately after inspection and approval by the Engineer of the completed excavation and placement of reinforcement. If the shaft is not concreted within eight (8) hours after completion of excavation, the slurry shall be re-circulated and re-cleaned using airlift equipment and a desanding unit to maintain slurry uniformity throughout the depth of the shaft prior to placing concrete.

B. The tremie pipe sections shall be in good condition as deemed by the Engineer. Welds at joint collars shall be inspected by the Engineer and any pipe sections showing signs of wear or defects shall be replaced. Tremie pipe joints shall be secured tightly with power equipment. Pipe sections shall be secured with safety chains.

C. Place concrete in one continuous operation. Concrete shall be placed through a tremie pipe directly from the concrete truck or from a concrete pump. A disposable plug, submitted by the Contractor and reviewed by the Engineer, shall be used to separate the slurry from the concrete at the top of the tremie pipe. The plug shall provide continuous separation between the slurry and the concrete for the entire length of the tremie pipe. Bottom of the tremie pipe or the concrete pump pipe shall be at the bottom of the open borehole prior to pumping concrete.

D. Vibrate the top 5 feet of concrete, not including any overpour, at the completion of concrete placement.

E. Cure and finish the top of the shaft to comply with the Plans and with the construction methods of the State Standard Specifications.

Additional Requirements for Slurry Displacement Method

A. Maintain the mineral slurry level to a minimum of 3 feet or polymer slurry level to a minimum 3 feet above the groundwater level or river level to prevent caving or sloughing of earth.

B. Test the slurry to verify satisfactory characteristics before concrete placement is started. Place concrete within the time the excavation remains stable and clean. Pump the displaced slurry to holding tank(s) sufficient to store the entire displaced volume of the drilled shaft. Do not spill slurry on the site or in the river or use excavated holding pits. When no longer needed, legally dispose of slurry at an off-site location approved by the Engineer.

C. Place concrete through a tremie pipe directly from the concrete truck or from a concrete pump. Bottom of the tremie pipe or the concrete pump pipe shall be at the bottom of the open borehole prior to pumping concrete. Use a minimum 10-inch inside diameter tremie pipe or a minimum 5-inch inside diameter pump pipe, made with watertight joints. Do not use aluminum components. The inside and outside surface of the tremie pipe shall be clean and smooth to permit both flow of concrete and unimpeded withdrawal during concreting.

1. Place a spherical separator or other approved device submitted by the Contractor and reviewed by the Engineer in the tremie pipe immediately prior to introduction of concrete to positively separate the concrete from the slurry. Methods acceptable for review are vermiculite plugs and industry commercially available plastic and rubber inflatable and non-inflatable plugs. Paper and plastic bags are not considered acceptable means and methods to separate the slurry and the concrete.

2. Keep the bottom of the tremie pipe within 10 inches of the excavation bottom until the separator floats to the surface of the shaft. The separator plug shall be retrieved from the excavation or be of a material, reviewed and approved by the Engineer, which will not cause a shaft defect if not removed.

3. Keep the tremie pipe embedded at least 10 feet (unless otherwise submitted and approved by the Engineer) below the top of the concrete/slurry interface throughout the concrete placement to maintain a seal against slurry mixing into the concrete. The tremie pipe shall be raised to the minimum 10-foot embedment depth following the delivery of concrete from each truckload of concrete.

4. Remove and dispose of the upper portion of concrete, contaminated with slurry, that reaches the top of the shaft. The Engineer shall observe the depth to which contaminated concrete has been removed by the Contractor. The Engineer shall indicate to the Contractor whether sufficient contaminated concrete has been removed or whether additional contaminated concrete requires removal. Alternative methods of concrete placement that limit the mixing of slurry with concrete may be proposed by the Contractor for review and approval by the Engineer.

Acceptance and Rejection of Drilled Shafts

A. In addition to other Contract acceptance criteria, the drilled shafts shall be accepted for payment only after the CSL tests and the results of concrete tests provide verification of the structural integrity of the Drilled shafts, as approved by the Engineer. If the CSL record is complex or inconclusive, coreholes shall be drilled in the drilled shaft. When a defect is confirmed by coring of the concrete, the Contractor shall be responsible for the cost of coring and subsequent grouting of the defect and the corehole. However, if no defects are found, the State will pay for all respective coring costs, including pressure grouting of the coreholes. The Engineer will be the sole judge of drilled shaft acceptance or rejection.

B. In the case that the Drilled shafts are determined by the Engineer to be unacceptable, the Contractor shall submit a plan for remedial action to the Engineer for review. Calculations and working drawings for the remedial action plan shall be stamped by a Registered Professional Civil Engineer currently registered in good standing in the State of Rhode Island. Design, labor and materials necessary to perform the remediation shall be furnished without additional cost to the State and without an extension of the contract time.

C. Following final acceptance of the Drilled shafts by the Engineer, the Contractor shall tremie grout the CSL access tubes with minimum 5000 psi cement grout.

Pre-Excavation

A. Comply with the State Standard Specifications in Sections 202 and 203 where pre-excavation is required to remove surface obstructions, as directed by the Engineer, or elected by the Contractor, in order to clear obstructions prior to drilled shaft excavation.

Obstruction Removal

A. Use all means and methods to remove, bypass, and/or demolish obstructions to allow installation of the Drilled shafts to the design depth and location shown on the Contract Drawings.

B. Refer to previous portions of this specification for definition of obstructions.

METHOD OF MEASUREMENT

Item Code 841.9901 **"**DRILLED SHAFT – FURNISH AND INSTALL IN SOIL" will be measured for payment by the total length in place from the bottom of the permanent

casing to the drilled shaft cut off elevation measured by the linear foot, permanently remaining in place, inspected and accepted in accordance with the Contract Documents and/or as directed by the Engineer.

Transportation, processing and legal off-site disposal of excavated materials in a licensed landfill facility in accordance with all Federal, State, and Local regulations will be measured for separately under the applicable provisions of Item Code 202.9901 – Handling, Hauling, and Stockpile Management of Contaminated Soils and Unclassified Soils, Item Code 202.9902 – Load, Haul and Dispose Soil, Type A, Item Code 202.9903 – Load and Haul Contaminated Soil, Type 1B, Item Code 202.9904 – Disposal of Contaminated Soil, Type 1B, Item Code 202.9905 – Load and Haul Contaminated Soil, Type 2, Item Code 202.9906 – Disposal of Contaminated Soil, Type 2, and Item Code 202.9907 - Load, Haul and Disposal Contaminated Soil, Type 3.

Item Code 841.9902 “DRILLED SHAFT - OBSTRUCTION REMOVAL” will be measured for payment by the length of obstruction removed per linear foot as described below:

Measurement for obstruction drilling will begin at the larger of the following rates of advance: 1.) when the rate of advance of the drilled shaft excavation using customary soil excavation tools and equipment has slowed to less than 10 percent of the average measured and computed rate of advance for the same soil strata encountered at the site or 2) the rate of advance has decreased to less than 0.5 ft in one hour. The time spent drilling obstructions will not be included in the determination of the average rate of advance in the strata.

Measurement for obstruction drilling will end when the rate of advance exceeds 20 percent of the average rate of advance in the strata.

All material between obstructions, defined by the above, shall not be measured for payment under this item but shall be measured under Item Code 841.9901.

Item Code 841.9903 “DRILLED SHAFT – FURNISH AND INSTALL ROCK SOCKET” will be measured for payment by the total length in place from the bottom of the accepted drilled shaft rocket socket tip elevation to the bottom of the permanent casing measured by the linear foot, permanently remaining in place, inspected and accepted in accordance with the Contract Documents and/or as directed by the Engineer.

BASIS OF PAYMENT

General

The total cost for all changes required because of the Drilled Shafts not installed in

accordance with these Special Provisions, defective construction, lost tools or equipment deficiencies shall be borne solely by the Contractor at no additional cost to the State. These costs shall include costs for engineering, mobilization and demobilization, set-up, equipment, labor and materials, and for the Engineer's additional services made necessary, as determined by the Engineer, by installation of the Drilled Shafts not installed in accordance with these Special Provisions.

The accepted quantity of Item Code 841.9901 **"**DRILLED SHAFT – FURNISH AND INSTALL IN SOIL" will be paid for at its respective contract unit price per "Linear Foot" as listed in the Proposal. The prices so-stated shall constitute full and complete compensation for all labor, materials, tools, and equipment and all other incidentals required to complete the work as described in these Special Provisions and elsewhere in the Contract Documents, complete in place and accepted by the Engineer.

Transportation, processing and legal off-site disposal of excavated materials in a licensed landfill facility in accordance with all Federal, State, and Local regulations will be paid for separately under the applicable provisions of Item Code.202.9901 – Handling, Hauling, and Stockpile Management of Contaminated Soils and Unclassified Soils, Item Code 202.9902 – Load, Haul and Dispose Soil, Type A, Item Code 202.9903 – Load and Haul Contaminated Soil, Type 1B, Item Code 202.9904 – Disposal of Contaminated Soil, Type 1B, Item Code 202.9905 – Load and Haul Contaminated Soil, Type 2, Item Code 202.9906 – Disposal of Contaminated Soil, Type 2, and Item Code 202.9907 - Load, Haul and Disposal Contaminated Soil, Type 3.

The accepted quantity of Item Code 841.9902 "DRILLED SHAFT - OBSTRUCTION REMOVAL" will be paid for at its respective contract unit price per "Linear Foot". The price so-stated shall constitute full and complete compensation for all labor, materials, tools, and equipment and all other incidentals required to complete the work as described in these Special Provisions and elsewhere in the Contract Documents, complete in place and accepted by the Engineer.

The accepted quantity of Item Code 841.9903 **"**DRILLED SHAFT – FURNISH AND INSTALL ROCK SOCKET" will be paid for at its respective contract unit price per "Linear Foot" as listed in the Proposal. The prices so-stated shall constitute full and complete compensation for all labor, materials, tools, and equipment and all other incidentals required to complete the work as described in these Special Provisions and elsewhere in the Contract Documents, complete in place and accepted by the Engineer.

SECTION T.06 CONDUIT

Unless otherwise modified elsewhere in the Contract Documents, Section T.06 of the Rhode Island Standard Specifications for Road and Bridge Construction is revised as follows:

Delete subsection **T.06.03.1 b** in its entirety and replace it with the following:

T.06.03.1 b Conduit Under Existing Pavement. Conduit under existing pavement shall refer to all conduit placed under existing paved areas where removal of the pavement is required only for the placement of conduit and the pavement is to be restored as part of this item. Conduit under existing pavement shall be placed in accordance with all applicable requirements of **Para. a** of this Subsection. The excavation shall be patched in accordance with the Plans regardless of the method of excavation. When conduit is placed in existing paved sidewalks, the sidewalk shall be replaced in accordance with **Subsection T.01.03.11** of these Specifications.

MATERIALS

STRUCTURAL STEEL:

- AASHTO DESIGNATION M 232, GRADE 3
- AASHTO DESIGNATION M 270, GRADE 36
- AASHTO DESIGNATION M 270, GRADE 50
- AASHTO DESIGNATION M 270, GRADE 50W

REINFORCING STEEL:

- AASHTO DESIGNATION M 31, GRADE 60
- GALVANIZED COATING ASTM A767 CLASS 1

PRESTRESSING STEEL:

- UNCOATED SEVEN WIRE LOW-RELAXATION STRAND, AASHTO DESIGNATION M 203, GRADE 270
- UNCOATED HIGH STRENGTH STEEL BAR, AASHTO DESIGNATION M 275

CONCRETE STRENGTHS:

1

- CLASS HP ¾" f'c=5,000 PSI

(ENDPOSTS, FLYING WINGWALL STEMS, WINGWALL COPING, WALL STEMS (FOR BRIDGE RAIL ON APPROACH SLAB AND ON FOOTING), BACK WALLS, BRIDGE DECKS AND END DIAPHRAGMS, BRIDGE SIDEWALKS, PRECAST ARCHED FASCIA PANEL, INTERMEDIATE DIAPHRAGMS, PYLONS AND PYLON STEMS AND KEEPER BLOCKS)

- CLASS MC ¾" f'c=3,500 PSI @28 DAYS
  f'c=5,000 PSI @56 DAYS

(ABUTMENT STEMS, PIER CAP, PIER STEMS, WINGWALL STEMS)

- CLASS XX ¾" f'c=4,000 PSI

(ABUTMENT FOOTINGS, WINGWALL FOOTINGS, APPROACH SLABS, FOOTINGS (FOR TWO BAR RAILING)

- SELF-CONSOLIDATING CONCRETE f'c=4,000 PSI

(DRILLED SHAFTS, ROCK SOCKETS)

- CLASS A 3/4" f'c=3,000 PSI

(APPROACH SIDEWALKS)

1

- CLASS HP ¾" f'c=8,500 PSI

(ALL PRECAST PRESTRESSED CONCRETE (PPC))

- THE CLASS OF CONCRETE FOR ALL OTHER COMPONENTS (NOT LISTED ABOVE) SHALL BE IN ACCORDANCE WITH SECTION 601- TABLE 1 OF THE RI STANDARD SPECIFICATIONS.

COMMONWEALTH ENGINEERS & CONSULTANTS, INC. 400 SMITH STREET PROVIDENCE, RI 02908	TITLE OF SKETCH STANDARD BRIDGE NOTES MATERIALS CHANGES	R.I. Contract No. 2011-CB-096	Sketch No. 1
FEBRUARY 7, 2012	ADDENDUM NUMBER 2	Revision to Sheet No. 49	

FOUNDATIONS

1. THE FURNISHING AND INSTALLING OF THE DEEP FOUNDATIONS TYPES SPECIFIED IN THIS CONTRACT SHALL BE IN ACCORDANCE WITH CONTRACT SPECIAL PROVISIONS OF THE CONTRACT DOCUMENTS.

2. THE GEOTECHNICAL DATA REPORT (GDR) USED FOR THE DESIGN OF THIS PROJECT IS INCLUDED IN THE CONTRACT DOCUMENTS FOR INFORMATION. THE GEOTECHNICAL INTERPRETIVE REPORTS (GIR) USED FOR THE DESIGN OF THE PROJECT ARE NOT PART OF THE CONTRACT DOCUMENTS, BUT ARE AVAILABLE TO BIDDING CONTRACTORS UPON REQUEST FROM THE RHODE ISLAND DEPARTMENT OF TRANSPORTATION.

   THE INTERPRETIVE INFORMATION IN THE GIR REPRESENTS THE OPINIONS, BASED ON FACTUAL DATA, BY QUALIFIED GEOTECHNICAL ENGINEERS AND/OR ENGINEERING GEOLOGISTS. THE PURPOSE OF MAKING THE GIR AVAILABLE TO BIDDING CONTRACTORS IS TO CLARIFY GEOTECHNICAL ASPECTS OF THE PROJECT AND TO PROVIDE A UNIFORM BASIS FOR BIDDING. THE INTERPRETATIVE INFORMATION PROVIDED SHALL NOT BE CONSTRUED AS A SUBSTITUTE FOR PERSONAL INTERPRETATIONS OF THE CONTRACTOR, AND THE CONTRACTOR SHALL BE RESPONSIBLE FOR DRAWING HIS/HER OWN CONCLUSIONS, BASED ON THE FACTUAL DATA OF THE GEOTECHNICAL DATA.

CONCRETE NOTES

1. CLASSES OF CONCRETE SHALL BE SELF-CONSOLIDATING (SCC), HIGH PERFORMANCE (HP), MASS CONCRETE (MC), , CLASS XX AND CLASS A, AS DESCRIBED IN THE RI STANDARD SPECIFICATIONS AND THE SPECIAL PROVISIONS OF THE SPECIFICATIONS. REFER TO THE "MATERIAL" NOTES FOR CLASSES OF CONCRETE SPECIFIED FOR VARIOUS COMPONENTS.

2. THE CONTRACTOR MAY, AT THE APPROVAL OF THE ENGINEER, PROPOSE THE USE OF SELF-CONSOLIDATING CONCRETE FOR ANY CLASS OF CONCRETE ON THIS PROJECT. SECTION 606 "SELF CONSOLIDATING CONCRETE (SCC)", CONTAINS THE REQUIREMENTS FOR MODIFYING ALL CLASSES OF CONCRETE MIX DESIGN FOR SELF-CONSOLIDATING APPLICATIONS.

3. ALL PORTLAND CEMENT CONCRETE SHALL BE AIR-ENTRAINED.

4. EXCEPT FOR FOOTINGS CAST BELOW GRADE, ALL REINFORCING STEEL SHALL BE GALVANIZED STEEL. (REFER TO "MATERIALS" SECTION) . ALL REINFORCEMENT FOR FOOTINGS SHALL BE STANDARD UNCOATED BLACK BARS.

20. IN ACCORDANCE WITH THE RI STANDARD SPECIFICATIONS, ALL METAL TIES OR ANCHORAGES WHICH ARE REQUIRED FOR CONCRETE FORMWORK SHALL BE SO CONSTRUCTED THAT THEY CAN BE REMOVED TO AT LEAST TWO INCHES BELOW THE EXPOSED SURFACE OF THE CONCRETE WITHOUT CAUSING DAMAGE TO THE CONCRETE SURFACE. SNAP TIES MAY BE USED ONLY IF APPROVED BY THE ENGINEER. IF THE CONTRACTOR PROPOSES TO USE THEM, A CATALOG CUT AND OTHER NECESSARY INFORMATION MUST BE SUBMITTED TO THE ENGINEER TO DEMONSTRATE THAT THE TIES WILL SNAP-OFF FAR ENOUGH INTO THE CONCRETE TO ALLOW FOR PROPER PATCHING. SNAP TIES MUST PROVIDE ADEQUATE STRENGTH TO SUPPORT THE FORMS. ALL CAVITIES SHALL BE FILLED WITH AN APPROVED CEMENT MORTAR MEETING THE REQUIREMENTS OF ASTM C 928.

21. WATER STOPS ARE REQUIRED FOR HORIZONTAL AND VERTICAL CONSTRUCTION JOINTS IN ABUTMENTS AND WALLS WHEN EXPOSED TO BACKFILL EARTH MATERIAL. WATER STOPS SHALL BE INSTALLED AT THE LOCATIONS DETAILED ON THE PLANS, AT THE LOCATIONS AS SPECIFIED ABOVE AND AT ALL LOCATIONS AS DIRECTED BY THE ENGINEER, ALL IN ACCORDANCE WITH SECTION 812 OF THE RI STANDARD SPECIFICATIONS.

22. PLACEMENT, FINISHING AND CURING OF BRIDGE SIDEWALK CONCRETE SHALL BE IN ACCORDANCE WITH SECTION 814 OF THE RI STANDARD SPECIFICATIONS EXCEPT THAT THE FINISHING MATCHINE(S) IS (ARE) NOT REQUIRED.

13

COMMONWEALTH ENGINEERS & CONSULTANTS, INC. 400 SMITH STREET PROVIDENCE, RI 02908	TITLE OF SKETCH DECK PLACEMENT SEQUENCE CONCRETE NOTE 22 CHANGE	R.I. Contract No. 2011-CB-096	Sketch No. 3
FEBRUARY 7, 2012	ADDENDUM NUMBER 2	Revision to Sheet No. 49	

DECK PLACEMENT SEQUENCE NOTES:

1. DECK SLAB TRANSVERSE CONSTRUCTION JOINTS SHALL BE PARALLEL TO THE CLOSEST CENTERLINE OF BEARING.

2. THE CONTRACTOR SHALL CAST THE SPECIFIC REGIONS OF THE DECK IN THE ORDER INDICATED BY THE DECK POURING SEQUENCE NUMBER.

3. DECK REGIONS DESIGNATED AS SECTION ① SHALL BE CAST FIRST.

4. DECK REGIONS DESIGNATED AS SECTION ② SHALL BE CAST A MINIMUM OF 3 DAYS AFTER SECTION ①.

5. THE CONTRACTOR HAS THE OPTION OF PLACING ALL CONCRETE FOR THE DECK SLAB WITHOUT THE TRANSVERSE CONSTRUCTION JOINTS PROVIDED THE APPROVED CONCRETE MIX DESIGN CONTAINS A RETARDER WHICH WILL ENSURE ALL CONCRETE REMAINS PLASTIC THROUGHOUT THE PLACEMENT PROCESS. OTHERWISE, THE CONTRACTOR SHALL FOLLOW THE DECK PLACEMENT SEQUENCE AS INDICATED ABOVE.

6. THE CONCRETE MIX DESIGN SHALL ENSURE ADEQUATE CONSOLIDATION CAN BE ACHIEVED.

7. NO OTHER LONGITUDINAL OR TRANSVERSE DECK JOINTS, OTHER THAN THAT SHOWN, WILL BE ALLOWED.

8. IN ACCORDANCE WITH DEPARTMENT POLICY, NO CHANGES SHALL BE MADE TO THE ABOVE DESCRIBED DECK PLACEMENT SEQUENCES WITHOUT APPROVAL OF THE CHIEF ENGINEER.

COMMONWEALTH ENGINEERS & CONSULTANTS, INC. 400 SMITH STREET PROVIDENCE, RI 02908	TITLE OF SKETCH DECK PLACEMENT SEQUENCE NOTE CHANGES	R.I. Contract No. 2011-CB-096	Sketch No. 4
FEBRUARY 6, 2012	ADDENDUM NUMBER 2	Revision to Sheet No. 77	

Table of Contents - Distribution of Quantities

Project Name - Natick Bridge No. 383
Estimate Name - Addendum No. 2 to Natick Bridge No. 383
R.I. Contract No. - 2011-CB-096
FAP Nos: 3RD-PRTY(212), BRO-0383(002)

ItemCode	Description	Page
201.0301	CUTTING AND DISPOSING ISOLATED TREES AND STUMPS (4"- 24")	1
201.0310	REMOVE AND DISPOSE SHRUBS	1
201.0320	CLEARING AND GRUBBING	1
201.0402	REMOVE AND DISPOSE CONCRETE CURB	1
201.0403	REMOVE AND DISPOSE SIDEWALKS	2
201.0408	REMOVE AND DISPOSE RIGID PAVEMENT	3
201.0409	REMOVE AND DISPOSE FLEXIBLE PAVEMENT	3
201.0410	REMOVE AND DISPOSE CATCH BASINS	4
201.0412	REMOVE AND DISPOSE MANHOLE	4
201.0414	REMOVE AND DISPOSE PIPE - ALL SIZES	4
201.0415	REMOVE AND DISPOSE GUARDRAIL AND POST ALL TYPES	4
201.0419	REMOVE AND DISPOSE FENCE	4
201.0423	REMOVE AND DISPOSE HANDHOLE	5
201.0424	REMOVE AND DISPOSE RETAINING WALL	5
201.0428	REMOVE AND DISPOSE FRAME AND GRATE OR FRAME AND COVER	5
201.0610	REMOVE AND DISPOSE DIRECTIONAL, WARNING, REGULATORY, SERVICE, AND STREET SIGNS	6
201.0616	REMOVE AND DISPOSE LIGHT STANDARD FOUNDATIONS	7
201.0617	REMOVE AND DISPOSE CONDUIT - ALL SIZES	7
201.9901	REMOVE AND STOCKPILE IMPACT ATTENUATOR	7
201.9902	REMOVE AND STOCKPILE PRECAST MEDIAN BARRIER FOR TEMP. TRAFFIC CONTROL STD. 40.5.0 LEFT IN PLACE	8
201.9903	REMOVE AND DISPOSE SHOCK ABSORBING BARRIER MODULES	8
201.9905	REMOVE AND DISPOSE STEEL BOLLARDS AND CHAIN	8
201.9906	REMOVE AND DISPOSE COBBLESTONE EDGING	8
201.9920	REMOVE AND ON-SITE STOCKPILE BRICK PAVERS	9
201.9921	REMOVE, REFURBISH AND STOCKPILE LIGHT STANDARD AND LUMINAIRE	9
202.0100	EARTH EXCAVATION	9
202.0700	COMMON BORROW	9
202.9901	HANDLING, HAULING, AND STOCKPILE MANAGEMENT OF CONTAMINATED SOILS AND UNCLASSIFIED SOILS	10
202.9902	LOAD, HAUL, AND DISPOSE SOIL, TYPE A	10
202.9903	LOAD AND HAUL CONTAMINATED SOIL TYPE 1B	10
202.9904	DISPOSE OF CONTAMINATED SOIL, TYPE 1B	11
202.9905	LOAD AND HAUL CONTAMINATED SOIL, TYPE 2	11
202.9906	DISPOSAL OF CONTAMINATED SOIL, TYPE 2	12
202.9907	LOAD, HAUL AND DISPOSE CONTAMINATED SOIL, TYPE 3	12
203.0100	STRUCTURAL EXCAVATION EARTH	12
203.0700	PERVIOUS FILL	13
204.0100	TRIMMING AND FINE GRADING	13
206.0201	BALED HAY EROSION CHECK STANDARD 9.1.0	15
206.0208	REMOVAL OF BALED HAY EROSION CHECKS	15
208.9901	**WET SOIL STOCKPILE**	**16**
209.9901	SEDIMENTATION CONTORL FOR CATCH BASINS	16
209.9902	SEDIMENTATION CONTROL FOR CURB INLET STRUCTURES	16
211.0100	CONSTRUCTION ACCESSES STANDARD 9.9.0	16
212.2000	CLEANING AND MAINTENANCE OF EROSION CONTROLS	16
213.0100	PLACEMENT OF MILLINGS BENEATH GUARDRAIL	17
302.0100	GRAVEL BORROW SUBBASE COURSE	17
303.0100	SPECIAL GRADED AGGREGATE FOR SHAPING AND TRIMMING DRIVEWAYS OR SHOULDERS	20
401.0300	BITUMINOUS SURFACE COURSE TYPE I-2	20
401.9901	SUPERPAVE HOT MIX ASPHALT - SURFACE COURSE (12.5 MM)	21
401.9902	SUPERPAVE HOT MIX ASPHALT - BASE COURSE (19 MM)	22
403.0300	ASPHALT EMULSION TACK COAT	22

Table of Contents - Distribution of Quantities

Project Name - Natick Bridge No. 383
Estimate Name - Addendum No. 2 to Natick Bridge No. 383
R.I. Contract No. - 2011-CB-096
FAP Nos: 3RD-PRTY(212), BRO-0383(002)

ItemCode	Description	Page
410.1000	TEMPORARY PATCHING MATERIAL/TRENCHES	24
601.0300	CLASS A PORTLAND CEMENT CONCRETE	24
603.1000	CONTROLLED LOW STRENGTH MATERIAL	25
701.0412	REINFORCED CONCRETE PIPE M 170 CLASS III 12 INCH	25
701.0418	REINFORCED CONCRETE PIPE M 170 CLASS III 18 INCH	25
701.0424	REINFORCED CONCRETE PIPE M 170 CLASS III 24 INCH	26
701.5210	10 INCH DUCTILE IRON WATER PIPE CLASS 52, RESTRAINED JOINT	26
701.5216	16 INCH DUCTILE IRON WATER PIPE CLASS 52, RESTRAINED JOINT	26
701.6008	8 INCH DUCTILE IRON SEWER SAFE PIPE CLASS 52	26
701.6012	12 INCH DUCTILE IRON SEWER SAFE PIPE CLASS 52	27
701.7724	24 INCH REINFORCED CONCRETE PIPE END SECTION STANDARD 2.3.0	27
701.8003	PIPE BEDDING CLASS C	27
701.8100	FURNISH AND INSTALL DUCTILE IRON FITTINGS	27
701.8151	CURB STOP BOX	28
701.9001	CONDUCT LEAKAGE TEST	28
701.9002	STERILIZATION OF WATER MAINS	28
701.9901	4" FACTORY PRE-INSULATED SEWER FORCE MAIN	28
701.9902	16" FACTORY PRE-INSULATED DUCTILE IRON WATER PIPE CLASS 52, RESTRAINED JOINT	29
701.9903	10X10 TAPPING SLEEVE AND TAPPING VALVE WITH GATE BOX	29
701.9904	2 INCH BLOW OFF ASSEMBLY	29
701.9905	4 INCH DUCTILE IRON SEWER SAFE PIPE CLASS 52	29
701.9906	AIR RELEASE VALVE	29
701.9907	16 INCH BUTTERFLY VALVE AND BOX	29
702.0514	FRAME AND GRATE STANDARD 6.4.0	30
702.0517	FRAME AND GRATE, STANDARD 6.3.2	30
702.0522	FRAME AND COVER STANDARD 6.2.1	30
702.0533	PRECAST CONCRETE APRON STONE 38'' STANDARD 7.1.8	31
702.0630	PRECAST MANHOLE 4' DIAMETER STANDARD 4.2.0	31
702.0712	PRECAST CONCRETE DROP INLET STANDARD 4.5.0	32
702.0840	ALTERNATE TOP COVER ROUND PRECAST MANHOLES AND CATCH BASINS STANDARD 4.7.2	32
702.9901	MODIFIED PRECAST 4' DIAMETER CATCH BASIN WITH 4' SUMP (MODIFIED STANDARD 4.4.0)	32
702.9903	PRECAST 4'-0" ROUND SEWER MANHOLE	33
702.9904	SEWER MANHOLE FRAME AND COVER (WARWICK)	33
702.9905	SEWER MANHOLE FRAME AND COVER (WEST WARWICK)	33
702.9906	PRECAST 5'-0" ROUND SEWER MANHOLE WITH INSIDE DROP	33
702.9907	FORCE MAIN LEAKAGE TEST	34
704.0100	RECONSTRUCT CATCH BASIN/CORBEL CONES	34
706.9000	PLUG AND CAP PIPE ALL SIZES	34
708.9040	CLEANING AND FLUSHING PIPE ALL SIZES	34
708.9041	CLEANING CATCH BASINS ALL TYPES AND SIZES	35
708.9042	CLEANING MANHOLES ALL TYPES AND SIZES	35
709.0200	CONCRETE HEADWALLS FOR PIPE CULVERTS STANDARD 2.1.0	35
709.8103	FURNISH & INSTALL CEMENT CONCRETE CLASS B THRUST & ANCHOR BLOCKS CAST-IN-PLACE	36
712.0100	WATER GATE BOX	36
712.9901	INSTALLATION OF 4“ GAS MAIN AND APPURTENANCES	36
713.8268	ADJUST CURB STOP BOX TO GRADE	36
713.8269	ADJUST WATER GATE BOXES TO GRADE	37
713.8300	ADJUST GAS GATE BOXES TO GRADE	38
714.8263	REMOVE AND RELOCATE POST TYPE HYDRANT	38
800.9911	NATICK BRIDGE NO. 383	38
803.9916	REMOVE AND DISPOSE EXISTING NATICK BRIDGE 383	38

Table of Contents - Distribution of Quantities

Project Name - Natick Bridge No. 383
Estimate Name - Addendum No. 2 to Natick Bridge No. 383
R.I. Contract No. - 2011-CB-096
FAP Nos: 3RD-PRTY(212), BRO-0383(002)

ItemCode	Description	Page
804.9930	CASED SOIL BORING	38
804.9931	ROCK CORING	39
804.9932	SPLIT SPOON SOIL SAMPLES	39
804.9934	PRE- AND POST-CONSTRUCTION SURVEY	39
805.9909	GEOTECHNICAL INSTRUMENTATION INSTALLATION, INITIALIZATION, MONITORING AND REPORTING	39
805.9910	REPLACEMENT OF VERTICAL MONITORING POINT	39
805.9911	REPLACEMENT OF SURFACE MONITORING POINT	39
805.9912	REPLACEMENT OF UTILITY MONITORING POINT	40
805.9913	REPLACEMENT OF MOVEMENT MONITORING POINT	40
805.9914	REPLACEMENT OF SEISMOGRAPH	40
841.9901	**DRILLED SHAFT - FURNISH AND INSTALL IN SOIL**	**40**
841.9902	**DRILLED SHAFT - OBSTRUCTION REMOVAL**	**40**
901.0101	GUARDRAIL STEEL BEAM SINGLE FACE EARTH AND ASPHALT	40
901.0183	STEEL BEAM BRIDGE CONNECTION APPROACH END (W/O NESTED RAIL)	41
901.0184	STEEL BEAM BRIDGE CONNECTION TRAILING END (W/ NESTED RAIL)	41
901.0190	GUARDRAIL STEEL BEAM ANCHORAGE APPROACH SECTION STANDARDS 34.3.1 AND 34.3.3	41
901.9901	GUARDRAIL END TREATMENT - ENERGY ABSORBING TERMINAL	41
903.0204	CHAIN LINK FENCE 4' STANDARD 31.1.0	41
905.0110	PORTLAND CEMENT SIDEWALK MONOLITHIC STANDARD 43.1.0	42
905.0115	PORTLAND CEMENT CONCRETE DRIVEWAY STANDARD 43.5.0	42
905.9901	RESET BRICK PAVERS FROM ON-SITE STOCKPILE	43
906.0210	CEMENT CONCRETE CURB PRECAST STRAIGHT STANDARD 7.1.0	43
906.0211	CEMENT CONCRETE CURB PRECAST CIRCULAR STANDARD 7.1.0	44
906.0221	6' PRECAST CONCRETE TRANSITION CURB STANDARD 7.1.2	44
906.0250	PRECAST CONCRETE WHEELCHAIR RAMP CURB STANDARDS 7.1.3, 43.3.0 AND 43.3.1	44
906.0280	3' PRECAST CONCRETE TRANSITION CURB STANDARD 7.1.1	45
906.9901	3' PRECAST CONCRETE RAMP STONE STD. 7.1.9	45
907.0100	WATER FOR DUST CONTROL	46
907.0200	CALCIUM CHLORIDE FOR DUST CONTROL (PROJECT WIDE)	46
911.0100	WET STONE MASONRY RETAINING WALL STANDARD 10.1.0	46
914.5010	FLAGPERSONS	46
914.5020	FLAGPERSONS - OVERTIME	46
915.0100	HIGHWAY BOUND GRANITE STANDARD 14.2.0	46
916.0600	SHOCK ABSORBING BARRIER MODULES	47
919.0101	TEST PITS	48
919.9910	DECONTAMINATION OF TOOLS, CASING, AND DRILL RIG	48
919.9911	DISPOSAL OF CONTAMINATED FLUID AND CONTAMINATED DRILL CUTTINGS	48
920.0085	PLACED STONE RIPRAP R-3, R-4, R-5 STANDARD 8.3.0	48
920.0150	BEDDING FOR RIPRAP FS-2 STANDARD 8.3.0	49
920.0200	FILTER FABRIC FOR RIP-RAP	49
922.0100	TEMPORARY CONSTRUCTION SIGNS STANDARD 29.1.0 AND 27.1.1	49
923.0105	DRUM BARRICADE STANDARD 26.2.0	50
923.0120	PLASTIC PIPE BARRICADE STANDARD 26.3.0	51
923.0125	PLASTIC PIPE TYPE III BARRICADE STANDARD 26.3.1	51
923.0200	FLUORESCENT TRAFFIC CONES STANDARD 26.1.0	51
924.0113	ADVANCE WARNING ARROW PANEL	51
925.0112	PORTABLE CHANGEABLE MESSAGE SIGN	52
926.0130	PRECAST MEDIAN BARRIER FOR TEMPORARY TRAFFIC CONTROL STANDARD 40.5.0	52
926.0140	REFLECTIVE DELINEATORS FOR TEMPORARY CONCRETE BARRIERS	52
929.9901	**FIELD OFFICES 550 SQUARE FOOT MINIMUM**	**52**

Table of Contents - Distribution of Quantities

Project Name - Natick Bridge No. 383
Estimate Name - Addendum No. 2 to Natick Bridge No. 383
R.I. Contract No. - 2011-CB-096
FAP Nos: 3RD-PRTY(212), BRO-0383(002)

ItemCode	Description	Page
931.0110	CLEANING AND SWEEPING PAVEMENT	53
932.0100	CUTTING AND MATCHING ASPHALT	54
932.0200	FULL-DEPTH SAWCUT OF BITUMINOUS PAVEMENT	54
932.0220	FULL DEPTH SAWCUT OF BITUMINOUS SIDEWALK/DRIVEWAY	56
932.0230	FULL DEPTH SAWCUT OF PORTLAND CEMENT CONCRETE SIDEWALK/DRIVEWAY	56
935.9901	REMOVING BITUMINOUS PAVEMENT BY MICRO-MILLING	57
936.0110	MOBILIZATION	57
937.0200	MAINTENANCE AND MOVEMENT TRAFFIC PROTECTION	57
942.0100	DETECTABLE WARNING SYSTEMS STANDARD 48.1.0	58
943.0100	TRAINEE MAN-HOURS	58
L01.0102	LOAM BORROW 4 INCHES DEEP	58
L01.0104	PLANTABLE SOIL 4 INCHES DEEP	59
L02.0101	GENERAL HIGHWAY SEEDING (TYPE 1)	59
L02.0102	RESIDENTIAL SEEDING (TYPE 2)	59
L06.9901	ACER RUBRUM, 3-3.5" CAL., B&B	60
L06.9902	JUNIPERUS KETELEERI, 8-10', B&B	60
L06.9903	CLETHRA ALNIFOLIA, 3-4', B&B	60
L06.9904	CORNUS RACEMOSA, 2-3', B&B	60
L06.9905	ILEX VERTICILLATA, 3-4', B&B	60
L06.9906	VACCINIUM CORYMBOSUM, 3-4', B&B	60
L06.9907	VIBURNUM DENTATUM, 3-4', B&B	60
L11.0102	TREE PLANT PROTECTION DEVICE STANDARD 51.1.0	61
L11.0103	SHRUB PLANT PROTECTION DEVICE STANDARD 51.2.0	61
L11.0104	DRIP-LINE TREE PROTECTION DEVICE STANDARD 51.1.1	61
T01.9901	NATICK BRIDGE NO. 383- ELECTRICAL	61
T04.6902	'2' STRANDED COPPER CONDUCTOR 600V INSULATION	62
T04.6906	'6' STRANDED COPPER CONDUCTOR 600V INSULATION	62
T04.9901	SPLICE KITS	62
T05.0100	PRECAST TYPE A HANDHOLE STANDARD 18.2.0	62
T06.5230	3 INCH SCHEDULE 80 POLYVINYL CHLORIDE PLASTIC CONDUIT - UNDERGROUND	62
T08.9901	LIGHT STANDARD AND LUMINAIRE RESET FROM ON-SITE STOCKPILE	63
T08.9902	LIGHT STANDARD FOUNDATION WITH ANCHOR BOLTS STD. 18.1.0 MODIFIED	63
T08.9910	LIGHT STANDARD AND LUMINARE RESET FROM STOCKPILE ON BRIDGE PYLON	63
T15.0100	DIRECTIONAL REGULATORY AND WARNING SIGNS	63
T15.1000	STREET SIGN ASSEMBLY STD. 24.6.1	64
T20.0012	12 INCH WHITE FAST - DRYING WATERBORNE PAVEMENT MARKING PAINT	64
T20.0104	4 INCH YELLOW FAST - DRYING WATERBORNE PAVEMENT MARKING PAINT	64
T20.1000	REMOVE EXISTING PAVEMENT MARKINGS	65
T20.2006	6 INCH EPOXY RESIN PAVEMENT MARKINGS WHITE	65
T20.2012	12 INCH EPOXY RESIN PAVEMENT MARKINGS WHITE	65
T20.2014	4 INCH EPOXY RESIN PAVEMENT MARKINGS YELLOW	66
T20.9901	4 INCH WHITE FAST-DRYING TEMPORARY WATERBORNE PAVEMENT MARKING PAINT	66
T20.9902	4 INCH YELLOW FAST-DRYING TEMPORARY WATERBORNE PAVEMENT MARKING PAINT	66
T20.9903	6 INCH TEMPORARY EPOXY RESIN PAVEMENT MARKINGS WHITE	66
T20.9904	12 INCH TEMPORARY EPOXY RESIN PAVEMENT MARKINGS WHITE	67
T20.9905	4 INCH TEMPORARY EPOXY RESIN PAVEMENT MARKINGS YELLOW	68
841.9903	**DRILLED SHAFT - FURNISH AND INSTALL ROCK SOCKET**	**68**

Distribution of Quantities

Project Name - Natick Bridge No. 383
Estimate Name - Addendum No. 2 to Natick Bridge No. 383
R.I. Contract No. - 2011-CB-096
FAP Nos: 3RD-PRTY(212), BRO-0383(002)

Item No.	Item Code	Description	UM	Qty.	Pay Code	Seq. No.
039	206.0208 Cont.	PROJECTWIDE (BCHEK)				
		AS DIRECTED (BCHEK)		1,400.00	0004	01
		RIVER ST (BCHEK)				
		80+40 RT - 82+50 RT (BCHEK)		680.00	0004	01
		Item 206.0208 Total:		**3,700.00**		
040	208.9901	**WET SOIL STOCKPILE**	**LS**			
		WARWICK				
		PROJECTWIDE		1,600.00	0004	01
		WEST WARWICK				
		WEST WARWICK		1,300.00	0004	01
		Item 208.9901 Total:		**1.00**		
041	209.9901	**SEDIMENTATION CONTORL FOR CATCH BASINS**	**EACH**			
		PROJECTWIDE				
		AS REQUIRED		18.00	0004	01
		Item 209.9901 Total:		**18.00**		
042	209.9902	**SEDIMENTATION CONTROL FOR CURB INLET STRUCTURES**	**EACH**			
		PROJECTWIDE				
		AS REQUIRED		15.00	0004	01
		Item 209.9902 Total:		**15.00**		
043	211.0100	**CONSTRUCTION ACCESSES STANDARD 9.9.0**	**SY**			
		PROJECTWIDE				
		AS REQUIRED		300.00	0004	01
		Item 211.0100 Total:		**300.00**		
044	212.2000	**CLEANING AND MAINTENANCE OF EROSION CONTROLS**	**LS**			

Distribution of Quantities

Project Name - Natick Bridge No. 383
Estimate Name - Addendum No. 2 to Natick Bridge No. 383
R.I. Contract No. - 2011-CB-096
FAP Nos: 3RD-PRTY(212), BRO-0383(002)

Item No.	Item Code	Description	UM	Qty.	Pay Code	Seq. No.
110	**805.9912**	**REPLACEMENT OF UTILITY MONITORING POINT**	**EACH**			
		NATICK BRIDGE NO. 383				
		NATICK BRIDGE NO. 383		1.00	0011	03
		Item 805.9912 Total:		**1.00**		
111	**805.9913**	**REPLACEMENT OF MOVEMENT MONITORING POINT**	**EACH**			
		NATICK BRIDGE NO. 383				
		NATICK BRIDGE NO. 383		10.00	0011	03
		Item 805.9913 Total:		**10.00**		
112	**805.9914**	**REPLACEMENT OF SEISMOGRAPH**	**EACH**			
		NATICK BRIDGE NO. 383				
		NATICK BRIDGE NO. 383		1.00	0011	03
		Item 805.9914 Total:		**1.00**		
113	**841.9901**	**DRILLED SHAFT - FURNISH AND INSTALL IN SOIL**	**LF**			
		NATICK BRIDGE NO. 383				
		NATICK BRIDGE NO. 383		326.00	0011	03
		Item 841.9901 Total:		**326.00**		
114	**841.9902**	**DRILLED SHAFT - OBSTRUCTION REMOVAL**	**LF**			
		NATICK BRIDGE NO. 383				
		NATICK BRIDGE NO. 383		33.00	0011	03
		Item 841.9902 Total:		**33.00**		
115	**901.0101**	**GUARDRAIL STEEL BEAM SINGLE FACE EARTH AND ASPHALT**	**LF**			
		EAST AVE (GRAIL)				
		14+67, LT - 14+79, LT (GRAIL)		12.50	0004	01
		14+80, RT - 14+92, RT (GRAIL)		12.50	0004	01

Distribution of Quantities

Project Name - Natick Bridge No. 383
Estimate Name - Addendum No. 2 to Natick Bridge No. 383
R.I. Contract No. - 2011-CB-096
FAP Nos: 3RD-PRTY(212), BRO-0383(002)

Item No.	Item Code	Description	UM	Qty.	Pay Code	Seq. No.
115	**901.0101 Cont.**	RIVER ST (GRAIL)				

Distribution of Quantities

Project Name - Natick Bridge No. 383
Estimate Name - Addendum No. 2 to Natick Bridge No. 383
R.I. Contract No. - 2011-CB-096
FAP Nos: 3RD-PRTY(212), BRO-0383(002)

Item No.	Item Code	Description	UM	Qty.	Pay Code	Seq. No.
148	**924.0113 Cont.**	TRAFFIC PLANS				
		(2 PANELS)(20 WEEKS)(5 DAYS/WEEK)		200.00	0004	01
		Item 924.0113 Total:		**200.00**		
149	**925.0112**	**PORTABLE CHANGEABLE MESSAGE SIGN**	**PDAY**			
		MAINTENANCE AND PROTECTION OF TRAFFIC PLANS				
		2 SIGNS FOR 30 DAYS		60.00	0004	01
		Item 925.0112 Total:		**60.00**		
150	**926.0130**	**PRECAST MEDIAN BARRIER FOR TEMPORARY TRAFFIC CONTROL STANDARD 40.5.0**	**LF**			
		MAINTENANCE AND PROTECTION OF TRAFFIC PLANS				
		PHASE 1		390.00	0004	01
		PHASE 2		400.00	0004	01
		Item 926.0130 Total:		**790.00**		
151	**926.0140**	**REFLECTIVE DELINEATORS FOR TEMPORARY CONCRETE BARRIERS**	**EACH**			
		MAINTENANCE AND PROTECTION OF TRAFFIC PLANS				
		FROM ITEM CODE 926.0130 AT 50' SPACING		20.00	0004	01
		REPLACEMENTS		20.00	0004	01
		Item 926.0140 Total:		**40.00**		
152	**929.9901**	**FIELD OFFICES 550 SQUARE FOOT MINIMUM**	**PMO**			
		PROJECTWIDE				
		AS REQUIRED		30.00	0004	01

Distribution of Quantities

Project Name - Natick Bridge No. 383
Estimate Name - Addendum No. 2 to Natick Bridge No. 383
R.I. Contract No. - 2011-CB-096
FAP Nos: 3RD-PRTY(212), BRO-0383(002)

Item No.	Item Code	Description	UM	Qty.	Pay Code	Seq. No.
198	**T20.9905**	**4 INCH TEMPORARY EPOXY RESIN PAVEMENT MARKINGS YELLOW**	**LF**			
		EAST AVE				
		12+00 - 18+00, CL		2,400.00	0004	01
		MAINTENANCE AND PROTECTION OF TRAFFIC				
		AS DIRECTED (2660 LF X 2 APPS)		5,320.00	0004	01
		RIVER ST				
		10+70 - 10+98, CL		112.00	0004	01
		11+08 - 11+70, CL		248.00	0004	01
		6+00 - 8+05, CL		820.00	0004	01
		8+35 - 10+30, CL		780.00	0004	01
		ROUNDING				
		PROJECTWIDE		20.00	0004	01
		Item T20.9905 Total:		**9,700.00**		
199	**841.9903**	**DRILLED SHAFT - FURNISH AND INSTALL ROCK SOCKET**	**LF**			
		NATICK BRIDGE NO. 383				
		NATICK BRIDGE NO. 383		207.00	0011	03
		Item 841.9903 Total:		**207.00**		