February 9, 2012

STATE OF RHODE ISLAND AND PROVIDENCE PLANTATION
DEPARTMENT OF TRANSPORTATION

RHODE ISLAND CONTRACT NO.2011-CH-084

FEDERAL-AID PROJECT NO. FAP Nos: HPP-0367(002)

Ten Mile River - Segment 7A

DOREEN ANN TOMLINSON SPORTS COMPLEX TO ARMISTICE BOULEVARD

CITY/TOWN OF East Providence, Pawtucket

COUNTY OF PROVIDENCE

NOTICE TO PROSPECTIVE BIDDERS

ADDENDUM NO. 2 Prospective bidders and all concerned are hereby notified of the following changes in the Plans, Specifications, Proposal and Distribution of Quantities for this contract. These changes shall be incorporated in the Plans, Specifications, Proposal and Distribution of Quantities, and shall become an integral part of the Contract Documents.

A. Clarification

1. Pre-Bid Sign-in Sheet and General Clarification

a. Pre-bid sign-in sheet has been provided as part of this Addendum No.2.

b. All bedding for proposed pipe shall be 6" in depth.

c. The excavated materials can be reused if their uses are acceptable according to the contract specifications.

d. The contractor or consulting scheduler shall purchase and maintain Primavera P6 version 7 or 8 software.

e. Trimming and Fine Grading, Loam and Seed, and Erosion Control Blanket, for Item Code 711.0300 "Seeded Ditch Standard 8.1.0" are seperate items and paid for under each individual item code.

f. Delete Call out "SD" on the "Parking Area Entrance" Detail on "Detail Sheet No. 2" insert call out "LS1" (6" Loam and Seed).

g. All references to "2" Bit. Conc. Surface Course, Type I-2" in the plans and contract documents shall be deleted and replaced with "1" Bituminous Surface Course, Superpave Mix - 4.75mm".

h. All references to "2" Bit. Conc. Surface Course, Type I-1" in the plans and contract documents shall be deleted and replaced with "3" Bituminous Base Course, Superpave Mix - 19mm".

i. All references to "3" Bit. Conc. Surface Course, Type I-2" in the plans and contract documents shall be deleted and replaced with "1" Bituminous Surface Course, Superpave Mix - 4.75mm" and "3"Bituminous Base Course, Superpave Mix - 19mm".

j. The Final Completion Date has been deleted from the project. A Phase 1 completion Date of November 16, 2012 and a Substantial Completion Date of May 17, 2013 has been added to the project.

B. Contract Documents

1. General Provisions - Contract Specific

a. Delete page CS-1 in it's entirety and insert revised page CS-1 (R-1) attached to this Addendum No. 2. Section 1 pavement make up has been revised.

b. Delete page CS-2 in it's entirety and insert revised page CS-2 (R-1) attached to this Addendum No. 2. Section 6 has been revised.

c. Delete page CS-3 in it's entirety and insert revised page CS-3 (R-1) attached to this Addendum No. 2. Section 8 has been revised to Epoxy Resin pavement markings.

d. Delete page CS-4 in it's entirety and insert revised page CS-4 (R-1) attached to this Addendum No. 2. Section 11 has been revised.

2. Appendices to General Provisions

a. Delete Transportation Management Plan Page 1 in its entirety and insert revised Transportation Management Plan Page 1 (R-1) attached to this Addendum No. 2. Holiday restrictions have been revised and added as an attachment.

b. Delete Transportation Management Plan Page 3 in its entirety and insert revised Transportation Management Plan Page 3 (R-1) attached to this Addendum No. 2. Approval signatures have been added.

c. Insert new 2012 Holiday Work Schedule attachment to the Transportation Management Plan attached to this Addendum No. 2.

d. Insert new General Restrictions attachment to the Transportation Management Plan attached to this Addendum No. 2.

e. Delete Stormwater Pollution Prevention Plan index i, ii, iii, and iv in its entirety and insert the revised Stormwater Pollution Prevention Plan index i, ii, iii, and iv (R-1) attached to this Addendum No. 2.

f. Delete Stormwater Pollution Prevention Plan pages 1 through 28 in its entirety and insert the revised Stormwater Pollution Prevention Plan pages 1 through 28 (R-1) attached to this Addendum No. 2.

3. Specifications - Job Specific

a. Delete page JS-i in its entirety and insert revised Page JS-i (R-1) attached to this Addendum No. 2. Job Specific Item 401.9901 and 401.9902 has been added to Index.

b. Delete page JS-ii in its entirety and insert revised Page JS-ii (R-1) attached to this Addendum No. 2. Job Specific Item 938.1000, 942 and L.05.9901 has been added to Index.

c. Add page JS-iii attached to this Addendum No. 2. Index has expanded due to new items.

d. Add pages JS-3A, JS-3B and JS-3C to this Addendum No. 2. Job Specific Item 401.9901 has been added.

e. Add pages JS-3D, JS-3E and JS-3F to this Addendum No. 2. Job Specific Item 401.9902 has been added.

f. Delete page JS-7 in its entirety and insert revised Page JS-7 (R-1) attached to this Addendum No. 2. Job Specific Item 808.9901 title has been revised.

g. Delete page JS-9 in its entirety and insert revised Page JS-9 (R-1) attached to this Addendum No. 2. Job Specific Item 901.9902 has been revised.

h. Add pages JS-26A and JS-26B to this Addendum No. 2. Job Specific Item 938.1000 has been added.

i. Add page JS-26C to this Addendum No. 2. Job Specific Item 942 has been added.

j. Add pages JS-28A, JS-28B and JS-28C to this Addendum No. 2. Job Specific Item L05.9901 has been added.

k. Add pages JS-34A to this Addendum No. 2. Job Specific Item L15.9905 has been added.

4. Distribution of Quantities

a. Delete pages Index 1, Index 2 and Index 3 in their entirety and insert revised Pages Index 1 (R-1), Index 2 (R-1) and Index 3 (R-1) attached to this Addendum No. 2. There are revisions to the DOQ.

b. Delete Pages 1 and 2 in its entirety and insert pages 1 (R-1) and 2 (R-1) attached to this Addendum No. 2. Quantity for Item 201.0301 has been revised.

c. Delete page 7 in its entirety and insert page 7 (R-1) attached to this Addendum No. 2. Quantity for Item 202.0100 has been revised.

d. Delete page 11 in its entirety and insert page 11 (R-1) attached to this Addendum No. 2. Quantity for Item 302.0100 has been revised and Item 401.0100, 401.0200 and 401.0300 have been deleted.

e. Insert new page 11a attached to this Addendum No. 2. Item 401.0300 has continued on to new page.

f. Delete page 12 in its entirety and insert page 12 (R-1) attached to this Addendum No. 2. Item 401.0300 has been deleted.

g. Delete page 15 in its entirety and insert page 15 (R-1) attached to this Addendum No. 2. Quantity for Item 902.9901 has been revised.

h. Insert new page 15a attached to this Addendum No. 2. Item 902.9903 begins on new page.

i. Delete page 16 in its entirety and insert page 16 (R-1) attached to this Addendum No. 2. Quantity for Item 902.9904 has been revised.

j. Delete page 19 in its entirety and insert page 19 (R-1) attached to this Addendum No. 2. Quantity for Item 922.0100 has been revised.

k. Delete page 42 in its entirety and insert page 42 (R-1) attached to this Addendum No. 2. Items 202.0201, 211.0100, 401.9901, and 401.9902 have been added to DOQ.

l. Insert new page 43 attached to this Addendum No. 2. Item 601.0300, 902.9905, 931.0110, L02.0103, and L05.9901 has been added to DOQ.

C. Plans

1. Detail Sheet No. 3

a. Entrance Ramp detail delete call out "Class B cem. concrete to within 2" of existing pavement surface" insert call out "Class A cem. concrete within 1" of existing pavement surface". Delete "2" Bit. Concrete Type I-2" insert "1" Bit. Surface Course, Superpave Mix - 4.75mm" as shown on attached Sketch No. 1 of this Addendum No. 2.

2. Detail Sheet No. 4

a. Pier Foundation Detail: delete note no. 9, as shown on attached Sketch No. 2 of this Addendum No. 2. The website reference is no longer valid.

b. Breakaway Pole Information Detail: delete note no. 4, as shown on attached Sketch No. 3 of this Addendum No. 2. The website reference is no longer valid.

c. Standard Motion Activated Intersection Pole Detail: delete note no. 5, as shown on attached Sketch No. 4 of this Addendum No. 2. The website reference is no longer valid.

3. Detail Sheet No. 5

a. Root Barrier Detail: delete 5/8" width and replace with .08", as shown on the attached Sketch No. 5 of this Addendum No. 2.

For RI Department of Transportation
Chief Engineer

Addendum No. 2

State of Rhode Island and Providence Plantations

TMC
CONFERENCE ROOM
SIGN IN SHEET

DATE: 1/26/12 SUBJECT Ten Mile River Seg 7A

NAME	AGENCY	Email	PHONE
K Wilson	RIDOT		4088
HENRY CHANGO	D'AMBRA CONST.	hchango@d-ambra.com	737-1300
DENNIS BROWN	RI DOT	DENNIS.BROWN@DOT.RI.GOV	222-3260 x4409
MIKE HOVEY	J H LYNCH	mhovey@jhlynch.com	333-4300
John O'Neill	J H Lynch	JONEILL@JHLYNCH.com	690-5905
James Klowan	Narragansett Improvement	JKLOWAN@NICORI.com	331-7420
Mike Brito	Britos Landscaping Services	mike@britoslandscapingservices.com	398 8885
MICHAEL WEATHERSTON	PEI	MWEATHERSTON@PRIMEENG.COM	233-2993
HUGH NEENAN	PRIME ENG. INC.	hneenan@primeeng.com	233-2993

1. BRIEF SCOPE OF WORK:

R.I. Contract No. **2011-CH-084**, Project Nos. **HPP-0367(001)** is for the Construction of the Ten Mile River Bikeway, Segment 7A, Pawtucket, Rhode Island.

The work encompassed by this contract shall include, but not be limited to the following:
Full depth pavement construction, clearing and grubbing, selective clearing, new culverts, new signing and pavement markings, landscaping, maintenance and protection of traffic, and all incidentals, complete in place, and accepted, as necessary to complete the work of this contract to the satisfaction of the Engineer with the following particulars for the bikeway:

Ten Mile River Bikeway, Segment 7A – Doreen Ann Tomlinson Sports Complex to Armistice Boulevard.

BIKEWAY AND ACCESS PATH:
1-inche Bituminous Surface Course, Superpave Mix - 4.75 mm
3-inches Bituminous Base Course, Superpave Mix - 19 mm
6-inches Gravel Borrow Subbase Course

PARKING AREA:
1-inche Bituminous Surface Course, Superpave Mix - 4.75 mm
3-inches Bituminous Base Course, Superpave Mix - 19 mm
12-inches Gravel Borrow Subbase Course

2. LIMITS OF PROJECT:

Ten Mile River Bikeway, Segment 7A
Doreen Ann Tomlinson Sports Complex to Armistice Boulevard. Approximately 0.82 miles.

3. LIST OF CONTRACT DRAWINGS:

Plan	Description
Volume 1	
1	Cover Sheet
2	Standard Plan Symbols & Standard Legend
3	Standard Notes-1
4	Standard Notes-2
5	Job Specific Plans Symbols, Legend & Notes
6	Key Plan
7-8	Typical Sections Nos. 1-2
9-18	General Plan & Profile Nos. 1-10
19	General Plan No. 11 Access Path
20	Profile No. 11 Access Path
21-25	Landscape Plan Nos. 1-5
26	Landscape Details
27-32	Location Plan Nos. 1-6
33-39	Signing & Striping Plan Nos. 1-7
40-45	Detail Sheet Nos. 1-6

Volume 2

1	Cover Sheet
2- 21	Cross Sections

RHODE ISLAND SPECIFICATIONS AND STANDARD DETAILS
Specifications to govern this project are the Rhode Island Standard Specifications for Road and Bridge Construction, 2004 Edition, with all revisions and the State and Federal Special Provisions included in the Contract Documents. Standard details for this project are R.I. Standard Details, June 15, 1998 Edition.

4. SHOP DRAWING REQUIREMENTS:

The Contractor shall prepare and submit for review and approval by the Engineer shop drawings for the following items:

a. Special sign structures and panels
b. 2'x2'x24' Precast Concrete Box Culvert
c. Guardrail
d. Segmental block retaining system
e. Pier foundation / breakaway pole for early warning system

5. SPECIALTY ITEMS:

The following items are hereby designated as "specialty items":

1. Pavement Markings
2. Traffic signing (other than temporary construction and warning signs).
3. Guardrail
4. Designated Landscaping Items
5. Early Warning System

6. REQUIRED SEQUENCE OF CONSTRUCTION:

Weekend Construction operations will not be permitted. The Contractor, at his own expense, shall provide safe access and egress to side streets and all residential and commercial driveways. The safe access and egress must be maintained at all times.

The Contractor will develop an orderly sequence of construction and coordinate with the Municipality. The sequence of construction must be submitted to the RIDOT Construction Section no later than one week prior to the Pre-Construction Conference.

7. SPECIAL REQUIREMENTS FOR TRAFFIC PROTECTION:

In addition to the requirements of the Standard Specifications for Road and Bridge Construction and the special requirements of other sections of this contract document, the following requirements shall be undertaken by the Contractor.

The Contractor shall be required to install and maintain proper warning and construction signing and protective devices at each work location to conform to Part VI of the 2009 edition of the Manual on Uniform Traffic Control Devices (MUTCD). All traffic protection must be approved by the Engineer before any construction may commence.

The Contractor shall install and maintain a Rhode Island Standard 26.5 Polyethylene Drum with markings, at each location where either adjustments to grade and/or reconstruction of drainage and utility structures have been made until resurfacing work has been performed. Other types of protective devices may be used, if approved by the Engineer.

8. SPECIAL REQUIREMENTS FOR PAVEMENT MARKINGS:

All pavement markings are to be in accordance with the requirements of the "Manual on Uniform Traffic Control Devices" 2009 edition with appropriate addenda.

Final pavement markings shall be white and yellow epoxy resin pavement markings. The epoxy resin pavement markings shall not be installed prior to 48 hours after the pavement installation, but they shall be installed within four weeks after the pavement installation, unless stated otherwise in these specifications.

9. GENERAL SEQUENCE OF OPERATIONS:
2012 HOLIDAY WORK SCHEDULE

Work will not be allowed on the following holidays:

Memorial Day	Columbus Day
Independence Day	Veteran's Day
Victory Day	Thanksgiving Day
Labor Day	Christmas Day
New Year's Day	

No work that impacts traffic is to be performed on the Wednesday, thru Sunday of Thanksgiving week in any calendar year.

Any deviations from the requirements stated here or detailed in these specifications, as well as any deviations from the approved construction work sequence and time schedule, must be submitted to the Engineer, in writing for approval.

10. STORAGE OF CONSTRUCTION MATERIALS AND/OR EQUIPMENT:

Storage of construction material and/or equipment will be discussed at the Pre-Construction Conference. Field locations will be approved by the Engineer, after consultation with the City of Pawtucket. A submittal of shop drawings detailing the request shall be made. The shop drawing must include a site plan of the proposed area(s). RIDOT will submit the shop drawings to RIDEM for approval, and RIDOT will not approve any such shop drawing until written approval is received from RIDEM. Furthermore, no overnight storage of construction equipment within the "clear zone" will be allowed. There also shall be no parking or storing of construction equipment under the drip line of any trees. The stockpile areas must be sized to accommodate the amount of material anticipated to be generated from the project, and must provide erosion and sediment control measures for piles of erodible material. Excavated materials not intended for use on the project shall be removed from the site as soon as practical.

11. MAINTENANCE OF PUBLIC ACCESS AND SAFETY:

It is brought to the Contractors' attention that the project site is located in an area frequently used by the public for outdoor recreation. The Contractor shall erect "Bike Path Under Construction" and "No Trespassing" signs at all entrances to the path. During construction the public will not be allowed in this area.

12. LANDSCAPING MATERIALS

Extra care should be given to follow Section M.18 of the RI Standard Specifications for Road and Bridge Construction, as it relates to soils being free of noxious weeds.

13. RHODE ISLAND DEPARTMENT OF ENVIRONMENTAL MANAGEMENT FRESHWATER WETLANDS PERMIT

It shall be the engineer's responsibility to post the State of Rhode Island Department of Environmental Management Permit in a noticeable location within the project area.
It shall be the Contractor's responsibility to adhere to all restrictions as stated or implied by the permits and orders attached hereto and included as part of the contract documents.
There will be no special payment for work done to comply with this permit

14. INSTALLATION OF EROSION CONTROL MEASURES:

The Contractor will be required to install temporary erosion control measures at the locations shown on the plans or as directed by the Engineer. The required erosion control measures shall be installed prior to excavation, planting or seeding of any sloped areas.

15. STABILIZATION OF DISTURBED AREAS:

All areas disturbed through excavation or the placement of roadway embankment shall be loamed and seeded as soon as practicable. The Contractor shall take care to ensure that siltation and erosion within the limits of disturbance are minimized throughout the life of the project.

16. DAMAGE TO EXISTING UTILITIES:

The Contractor shall check and verify the exact location of all existing utilities and service connections, both underground and overhead with Dig Safe. Any damage to the utilities which are detailed by Dig Safe shall be the Contractor's responsibility. Cost to repair such damage shall be borne by the Contractor.

R-1

LEVEL 3 TRANSPORTATION MANAGEMENT PLAN

Project Name: **Ten Mile River - Segment 7A**
RI Design Contract No(s): **2011-CH-084**
RI Construction Contract No(s):

Submission: **ADV** Date: **January, 2012**

PROJECT INFORMATION

Brief Project Description: Ten Mile River Bikeway Segment 7A contract shall include but not limited to the following: Construction of a 10-foot wide paved bicycle / pedestrian facility with 2-foot graded shoulders, cross culverts, extensive landscaping and post and rail fence.

General Work Limits: Doreen Ann Tomlinson Sports Complex to Armistice Boulevard, along the Ten Mile River. Most of the project work will be completed outside of existing roadway limits with no impact on road users, there is work at Armistice Boulevard that will require temporary restrictions to traffic, including lane closures, shoulder closures and lane shifts.

WORK ZONE LOCATIONS

ROADWAY NAME or INTERSECTION	FROM	TO	APPROX. LENGTH
Armistice Boulevard	500' east of existing	500' west of existing	1000 ft.
	Segment 6 bikepath	Segment 6 bikepath	

General Project Schedule*: This project is expected to begin in March 2012 and Phase 1 completion date is November 2012. The Substantial completion date is June 2013.

*The information in this section is not intended to and shall not supersede the approved schedule and milestone/completion dates for the project.

TRAFFIC-RELATED WORK RESTRICTIONS

General Restrictions: Weekend construction operations will not be permitted. See General Restrictions (attachment)

Holiday Restrictions: See Attachment for Holiday Restrictions

Addendum No. 2

PERFORMANCE MONITORING, CHANGES TO TMP, & CONTINGENCIES

The **Contractor's TMP Implementation Manager (if identified below)** is responsible for keeping the portion of the project being used by public traffic in a condition that (1) safely and adequately accommodates such traffic and (2) is in accordance with the Traffic-Related Work Restrictions, the Temporary Traffic Control Plans, and where appropriate, the other transportation management strategies identified above. The **RIDOT TMP Implementation Manager** or his/her responsible designee should (1) inspect the project work zones at initial setup, at the start of each subsequent work day, and just prior to extended breaks in the work (e.g., weekends) for conformance with the Temporary Traffic Control Plans, the *ATSSA Quality Guidelines for Temporary Traffic Control Devices and Features*, and where applicable, the other transportation management strategies identified above and (2) document all work zone-related feedback and complaints that are received from the public.

If at any time (1) a significant deviation from any of the strategies included in the TMP (e.g., the use of an alternate construction sequence) is desired by one or more members of the project implementation team, (2) field observations and/or data suggest that impacts to road users are or will be unacceptable, or (3) one or more performance requirements established in the TMP are not being met in the field, the RIDOT TMP Implementation Manager shall report the situation to his/her supervisor or Division/Section/Unit manager. The supervisor / manager will coordinate with the State Traffic Engineer, the Deputy Chief Engineer, the TMP Implementation Manager(s), the Chief Engineer, and/or other interested parties as appropriate and/or necessary to consider and determine whether revised and/or alternate strategies should be implemented in an effort to lessen the adverse safety and/or mobility impacts of the project. If the supervisor / manager deems that strategy changes should be implemented, the changes shall be documented in a revised version of the TMP and the Deputy Chief Engineer, the State Traffic Engineer, and the Chief Engineer must approve of the revised TMP prior to their implementation.

If a significant deviation from any of the strategies included in the TMP is requested by the Contractor, unless directed otherwise by the RIDOT the Contractor is responsible for preparing and submitting to the RIDOT TMP Implementation Manager appropriate documentation (e.g., design calculations, analysis reports, Temporary Traffic Control Plans, etc.) showing that the requested change(s) are (1) feasible and (2) expected to result in safety and mobility impacts that are no more adverse than the impacts resulting from the strategies already included in the latest approved TMP. The RIDOT will review and consider the submittal(s) as described in the preceding paragraph and will determine whether the changes should be implemented. If the requested changes are approved by the RIDOT, unless otherwise directed by the RIDOT the Contractor shall prepare and submit to the RIDOT TMP Implementation Manager a revised version of the latest approved TMP in both printed and electronic (Microsoft® Excel) format that documents all of the approved changes. Work to implement the changes shall not begin until the Deputy Chief Engineer, the State Traffic Engineer, and the Chief Engineer have approved of the revised TMP.

When unexpected events (e.g., crashes, inclement weather, unforeseen traffic demands, etc.) occur in a project work zone where one or more lanes are closed, the RIDOT TMP Implementation Manager or his/her responsible designee should (1) determine whether or not the lane closure(s) can/should be removed in order to improve traffic operations and/or minimize delays and (2) if deemed appropriate, take action to remove the lane closure(s).

Other
Requirements:

TMP APPROVALS

All approvals must be obtained prior to start of work

DEPUTY CHIEF ENGINEER	STATE TRAFFIC ENGINEER	CHIEF ENGINEER
Signature: Frank Corrao, III, P.E.	Signature: For Robert Rocchio, P.E.	Signature: Kazem Farhoumand, P.E.
Date: 1/27/12	Date 1-24-12	Date: 1/27/12

TMP IMPLEMENTATION MANAGERS

Project managers with the primary responsibility & authority for implementation of this TMP

RIDOT	CONTRACTOR (if contract work)
Name:	Name:
Title:	Title:
Unit:	Company/Unit:
Office Phone:	Office Phone:
Mobile Phone:	Mobile Phone:
E-Mail:	E-Mail:

Addendum No. 2

2012 Holiday Work Schedule

No lane and/or shoulder closures allowed after 1:00pm on the Friday preceding a holiday weekend.

EASTER SUNDAY

-No lane and/or shoulder closures allowed on Saturday and/or Sunday

NEW YEAR'S DAY, INDEPENDENCE DAY, VETERANS DAY, & CHRISTMAS DAY

-No lane and/or shoulder closures allowed after 1pm on the day before the holiday

-No lane and/or shoulder closures allowed on the holiday

DR. MARTIN LUTHER KING JR. DAY, MEMORIAL DAY, VICTORY DAY, LABOR DAY, & COLUMBUS DAY

-No lane and/or shoulder closures allowed on Saturday, Sunday, and/or Monday

THANKSGIVING DAY

-No lane and/or shoulder closures allowed after 1:00pm on the Wednesday preceding Thanksgiving Day

-No lane and/or shoulder closures allowed Thanksgiving Day

-No lane and/or shoulder closures allowed Friday, Saturday, and /or Sunday

			MINIMUM NUMBER OF LANES & SHOULDERS TO REMAIN OPEN TO TRAFFIC[1,2]						
	Time of Day		Day of Week						
Location	From	To	SUN	MON	TUES	WED	THURS	FRI	SAT
Roadway									
Armistice Blvd	0:00	9:00:00	ALL	ALL	ALL	ALL	ALL	ALL	ALL
	9:00:00	16:00:00	ALL	1 L (alt)	1 L (alt)	1 L (alt)	1 L (alt)	1 L (alt)	ALL
	16:00:00	0:00	ALL	ALL	ALL	ALL	ALL	ALL	ALL
Sidewalk									
Armistice Blvd	0:00	24:00:00	1 S	1 S	1 S	1 S	1 S	1 S	1 S

LEGEND

ALL	All travel lanes and shoulders shall remain open to traffic
1 L	A minimum of one 11-foot wide travel lane in each direction shall remain open to traffic
1 L (alt)	A minimum of one 11-foot wide travel lane shall remain open to alternating traffic
1 S	Sidewalk construction shall not be done on both sides of the road directly across from each other at the same time. One side must remain open to pedestrians at all times.

NOTES

1 The set-up and break-down of temporary traffic control devices within a traveled way or shoulder shall be construed as a closure of that traveled way or shoulder.

2 The provisions noted herein shall not free the Contractor from his responsibility to conduct all work in such a manner that assures the least possible obstruction to traffic.

Stormwater Pollution Prevention Plan

For:

Ten Mile River Bikeway Segment 7 A

From Doreen Ann Tomlinson Sports Complex to Armistice Boulevard

Pawtucket, Rhode Island

Owner:

Rhode Island Department of Transportation
Frank Corrao, III P.E.
Deputy Chief Engineer
2 Capitol Hill
Providence, RI 02903
401-222-2023

Operator:

TO BE DETERMINED UPON CONTRACT AWARD
Insert CONTRACTOR Name
Insert Name
Insert Address
Insert City, State, Zip Code
Insert Telephone Number

SWPPP Prepared By:

Prime Engineering Inc.
142 Putnam Avenue
Johnston, R.I. 02919
401-233-2993

SWPPP Preparation Date:

May 2011

Estimated Project Dates:

Start Date: March 2012
Completion Date: May 2013

CERTIFICATION

I certify under penalty of law that this document and all attachments were prepared under the direction or supervision in accordance with a system designed to assure that qualified personnel properly gather and evaluate the information submitted. Based on my inquiry of the person or persons who manage the system, or those persons directly responsible for gathering the information, the information submitted is, to the best of my knowledge and belief, true, accurate, and complete.

I am aware that there are significant penalties for submitting false information, including the possibility of fine and imprisonment for knowing violations. I am aware that it is the responsibility of the owner/operator to implement and amend the SWPPP as appropriate in accordance with the requirements of the General Permit.

_____

Owner Signature: Date

Frank Corrao, III P.E.
Deputy Chief Engineer
Rhode Island Department of Transportation

_____

Operator Signature: Date

TO BE DETERMINED UPON CONTRACT AWARD

Contractor Representative Name: _____

Contractor Title: _____

Contractor Company Name: _____

Table of Contents

CERTIFICATION ii
INTRODUCTION 1
SECTION 1: SITE DESCRIPTION 2
1.1 Project/Site Information 2
1.2 Nature and Sequence of Construction Activity 2
1.3 Existing and Proposed Soils, Slopes, Vegetation, and Drainage Patterns 3
1.4 Construction Site Estimates 3
1.5 Receiving Waters 4
1.6 Allowable Non-Storm Water Discharges 4
1.7 Existing Data of Known Discharges from Site 4
1.8 Endangered Species Certification/Natural Heritage Areas 5
1.9 Historic Preservation/Cultural Resources 5
1.10 Site Features and Sensitive Areas to be Protected 6
1.11 Potential Sources of Pollution 7
1.12 Site Plans 8
SECTION 2: EROSION AND SEDIMENTATION CONTROLS 9
2.1 Minimize Disturbed Area and Protect Natural Features and Soil 9
2.2 Phase Construction Activity 10
2.3 Phased Clearing/Grubbing 10
2.4 Monitoring Weather Conditions 11
2.5 Initiating Stabilization Practices 11
2.6 Control Stormwater Flowing Onto and Through the Project 11
2.7 Stabilize Soils 12
2.8 Protect Slopes 12
2.9 Protect Storm Drain Inlets 12
2.10 Protect Storm Drain Outfalls 13
2.11 Establish Perimeter Controls and Sediment Barriers 13
2.12 Retain Sediment On-Site and Control Dewatering Practices 13
2.13 Additional BMPs 14
2.14 Construction Site Erosion and Sediment Control BMPs 15
SECTION 3: GOOD HOUSEKEEPING BMPS 15
3.1 Off-site Tracking of Sediments 16
3.2 Waste Disposal 16
3.3 Spill Prevention and Control Plan 17
3.4 Control of Allowable Non-Storm Water Discharges 18
3.5 Establish Proper Building Material Staging Areas 18
3.6 Designate Washout Areas 18
3.7 Establish proper equipment/vehicle fueling and maintenance practices 19
3.8 Dust Control 19
3.9 Sweeping 19
3.10 Additional BMPs 20
3.11 Construction Site Good Housekeeping BMPs 20
SECTION 4: POST-CONSTRUCTION BMPs 20
4.1 Post-Construction BMPs 21

4.2 Low Impact Design Considerations 21
4.3 Post-Construction BMPs 21
SECTION 5: MAINTENANCE and INSPECTIONS 22
5.1 Maintenance 22
5.2 Inspections 22
5.3 Corrective Actions 24
5.4 Long-term Maintenance 24
SECTION 6: Amendments 25
SECTION 7: Recordkeeping 26
SECTION 8: Party Certifications 26
Insert more contact/signature lines as necessary 27
SWPPP APPENDICES 28
Attachment A – General Location Map 28
Attachment B – Site Plans 28
Attachment C – Copy of RIPDES General Permit 28
Attachment D – Copy of Regulatory Permits 28
Attachment E – Copy of RIPDES NOI 28
Attachment F – Inspection Reports 28
Attachment G – Corrective Action Log 28
Attachment H – Amendments Log 28
Attachment I – Post-Construction BMP Inspection Reports 28
Attachment J – Post-Construction BMP Inspection Log 28

INTRODUCTION

This Storm Water Pollution Prevention Plan (SWPPP) has been prepared for the State of Rhode Island Department of Transportation (RIDOT) pursuant to the Rhode Island Department of Environmental Management (RIDEM) Rhode Island Pollutant Discharge Elimination System (RIPDES) Program regulations (amended February 5, 2003). Pursuant to Rule 32 of the RIPDES Regulations, projects proposing to discharge storm water must seek authorization under a RIPDES General Permit. In accordance with the General Permit for Storm Water Discharge Associated with Construction Activity (General Permit), projects that disturb one (1) or more acres require the preparation of a SWPPP and RIDEM authorization following RIPDES review of a Notice of Intent (NOI). This SWPPP provides guidance for complying with the terms and conditions required under the General Permit, however, this document does not negate or eliminate the need to understand and adhere to all applicable RIPDES regulations.

The purpose of erosion and sedimentation best management practices (BMPs) is to prevent pollutants from leaving the construction site and entering waterways or environmentally sensitive areas during and after construction. This SWPPP has been prepared prior to the initiation of construction activities to address anticipated worksite conditions. The best management practices (BMPs) depicted on the site plan and described in this narrative should be considered the minimum measures required to control erosion, sedimentation, and stormwater runoff at the site. Since construction is a dynamic process with changing site conditions, it is the operator's responsibility to manage the site during the construction phases so as to prevent pollutants from leaving the site. This may require the operator to revise and amend the SWPPP during construction to address varying site and/or weather conditions, such as by adding or realigning erosion or sediment controls, to ensure the SWPPP remains compliant with the General Permit. Records of these changes must be added to the amendment log attached to the SWPPP, and to the site plans as "red-lined" drawings.

It is the responsibility of the RIDOT Resident Engineer to maintain the SWPPP, including all attachments, amendments and inspection records, at the project field office and to make all records available for inspection by RIDEM during construction. (RIPDES Construction General Permit – Section II.A.)

Please note: ***Even if practices are correctly installed on a site according to the approved plan, the site is only in compliance when erosion and sedimentation are effectively controlled throughout the entire site.***

The RIDOT Resident Engineer and designated Inspector are required to review the SWPPP and sign the Party Certification pages (Section 8). The prime contractor and all subcontractors involved in earthwork or exterior construction activities are also required to review the SWPPP and sign the certification pages before construction begins.

Any questions regarding the SWPPP, BMPs, inspection requirements, or any other facet of this document may be addressed to the RIDOT Natural Resources Unit at 401-222-2023.

Additional resource help may be found at the EPA NPDES SWPPP website:
http://www.epa.gov/npdes/swpppguide

and the EPA National Menu of Stormwater Best Management Practices:
http://cfpub.epa.gov/npdes/stormwater/menuofbmps

SECTION 1: SITE DESCRIPTION

RIPDES Construction General Permit – Section IV.E.1

1.1 Project/Site Information

Project/Site Name:

- Ten Mile River - Segment 7A
- Construction of a 10' wide paved bicycle/pedestrian facility with 2' graded shoulders, six cross culverts, extensive landscaping and post and rail fence.

Project Street/Location:

- West of Ten Mile River, Doreen Ann Tomlinson Sports Complex to Armistice Boulevard (State Route 15); Assessors plat 14B, lot 99, plat 15B, lot 367 plat 30-B lot 136.
- Pawtucket, R.I.

1.2 Nature and Sequence of Construction Activity

Provide a narrative describing the nature and estimated timetable for the construction activities, including an anticipated sequence of major activities of the project, and the ultimate intended use of the project. (IV.E.1.b)

- Clearing and grubbing, construction of a 10 foot wide paved bicycle/pedestrian facility, with a 2 foot graded shoulders, new signing and pavement markings, new cross culverts, post and rail fence and extensive landscaping.

The anticipated sequence of major project activities is as follows:

- Install erosion control and tree protection
- Tree and shrub root pruning and clearing and grubbing
- Construction of Parking Lot to Access Path; Excavating, grading, paving and grading of shoulders
- Construction of Access Path; Excavating, grading, paving and grading of shoulders
- Construction of Bike Path (Access Path to Armistice Blvd.); Excavating, grading, installing drainage crossings/culverts, paving, installing Early Warning System and grading of shoulders
- construction of Retaining Walls
- Pavement markings and signing installation
- Installation of Landscaping items; loam and seed, jute mesh, trees, shrubs, benches and trash receptacles

Estimated Project Start Date:	March 2012
Estimated Project Completion Date:	May 2013
Estimated Number of Months:	15

1.3 Existing and Proposed Soils, Slopes, Vegetation, and Drainage Patterns

Provide description of pre- and post-construction site conditions

Soil type(s):
Provide a description of the soils at the site and of each soils' erodibility hazard as listed in the U.S. Soil Conservation Service's Soil Survey of Rhode Island (1981). (IV.E.1.e)

- Pre-Construction: HcC Hinckley gravelly sandy loam, rolling.
- Post-Construction: HcC Hinckley gravelly sandy loam, rolling and a 10' wide paved Bikeway.

Slopes:

Provide a description of the slopes that will be impacted by construction activities (grading or filling)

- Existing: Wooded area
- Proposed: Typical slope of 1:2 along entire Bikeway.

Vegetation/Impervious Area:

Provide a description of the vegetative and impervious areas that will be impacted by construction activities

- Existing: Wooded and gravel path
- Proposed: 10' wide bituminous surfaced bikepath, with 2' graded shoulders.

Drainage Patterns:

Provide a description of the drainage patterns that will be impacted by construction activities

- Existing: Overland runoff slopes towards Ten Mile River
- Proposed: Sheet flow off bike path toward Ten Mile River

1.4 Construction Site Estimates

Provide construction site estimates of the total area of the site and the total area of the site that is expected to undergo soil disturbance (IV.E.1.c) and the calculated pre-construction and post-construction runoff coefficients for the site. (IV.E.1.d)

The following are estimates of the construction site:

Total Project Area	5 acres
Construction Site Area to be disturbed	1.5 acres
Percentage impervious area before construction	0 %
Runoff coefficient before construction	0.4
Percentage impervious area after construction	22 %
Runoff coefficient after construction	0.5

1.5 Receiving Waters

List the waterbody(s) that will receive stormwater from the site, including streams, rivers, lakes, coastal waters, and wetlands. Note any stream crossings, if applicable.
List the storm sewer system or drainage system that stormwater from the site could discharge to and the waterbody(s) that it ultimately discharges to. (III.A.7)
If any of the waterbodies above are impaired (303(d) listed) and/or subject to Total Maximum Daily Loads (TMDLs), list the pollutants causing the impairment and any specific requirements in the TMDL(s) that are applicable to construction sites.
Visit http://www.dem.state.ri.us/programs/benviron/water/quality/rest/index.htm for more information and a list of Rhode Island impaired waters and TMDL Studies. See also the RIDEM Notice of Intent instructions (Section IV).

Receiving waterbodies within the Ten Mile River Basin are described as follows:

- Ten Mile River and Tributaries (RI0004009R-01A) is 3.09 Miles from the Massachusetts / Rhode Island border to the inlet to Turner Reservoir north. Stormwater runoff may reach Ten Mile Rive after flowing overland in a generally easterly direction from the bikeway paved path. This class B1 waterbody is identified as not supporting use for fish and wildlife habitat, primary contact recreation and secondary contact recreation.

1.6 Allowable Non-Storm Water Discharges

Discharges not comprised of storm water are allowed under the General permit but are limited to the following: discharges which result from the washdown of vehicles where no detergents are used; external building washdown where no detergents are used; the use of water to control dust; fire fighting activities; fire hydrant flushings; natural springs; uncontaminated groundwater; lawn watering; potable water sources including waterline flushings; irrigation drainage; pavement washwaters where spills or leaks of toxic or hazardous materials have not occurred (unless all spilled materials have been removed) and where detergents are not used; and foundation or footing drains where flows are not contaminated with process materials such as solvents, or contaminated by contact with soils where spills or leaks of toxic or hazardous materials has occurred. If any of these discharges may reasonably be expected to be present and to be mixed with storm water discharges, they must be specifically listed here. (IV.E.1.g)

Are there allowable non-storm water discharges on or near the project area?

(NO)

If yes, list the sources of allowable non-storm water discharge

- N/A

1.7 Existing Data of Known Discharges from Site

List and provide existing data (if available) on the quality of any known discharges from the site (IV.E.1.h).

Are there known storm water discharges from the project area?

(NO)

Describe how this determination was made:

- Field inspections throughout the project corridor as previously described under Sections 1.3 and 1.5.

If yes, list discharges and locations:

- (N/A)

Is there existing data on the quality of the known storm water discharges?

(NO)

If yes, provide data:

- (N/A)

1.8 Endangered Species Certification/Natural Heritage Areas

Review any/all applicable federal, state, local, or tribal ***endangered/threatened species*** *requirements to determine if there are endangered species on or near the construction site.*

Are endangered or threatened species on or near the project area?

FEDERAL: (NO) **STATE**: (NO)

Describe how this determination was made:

- Wildlife Habitat Evaluation by Applied Bio-Systems, Inc.

If yes, describe the species and/or critical habitat:

- (N/A)

If yes, describe or refer to documentation which determines the likelihood of an impact on identified species and/or habitat and the steps taken to address that impact.

- (N/A)

Review RIDEM Natural Heritage Area maps to determine if there are natural heritage areas on or near the construction site. See the RIDEM Notice of Intent instructions (Section V).(III.A.8)

Are there any Natural Heritage Areas on or near the construction site?
(NO) - PAL Report dated 9/16/10

If yes, describe or refer to documentation which determines the likelihood of an impact on this area and the steps taken to address that impact.

- (N/A)

1.9 Historic Preservation/Cultural Resources

Review any/all applicable federal, state, local, or Native American historic preservation laws and regulations and coordinate with the RIDOT-Cultural Resources Unit (RIDOT-CRU) to determine if there are historic properties, historic cemeteries or cultural resources on or near the construction site.

Are there any historic properties, historic cemeteries or cultural resources on or near the construction site?

(NO)

Describe how this determination was made and summarize RIDOT-CRU review comments:

- Pal Report done 9/16/10. The sections 106/4(f) reviews are completed and no further action is required with RIHPC, JHCBRUNHCC & NITHPO

If yes, describe or refer to documentation which determines the likelihood of an impact on this historic property, historic cemetery or cultural resource and the steps taken to address that impact including any conditions or mitigation measures that were approved by other parties.

- (N/A)

1.10 Site Features and Sensitive Areas to be Protected

Describe unique site features including streams, stream buffers, wetlands, specimen trees, natural vegetation, steep slopes, or highly erodible soils, historic properties, historic cemeteries or cultural resources that are to be preserved.

Describe unique features and measures to protect them:

- There are several areas on this project where proposed path will impact wetlands. In these areas the impact has been kept to a minimum by matching the existing grade as close as possible. The filling has been kept to a minimum by matching the existing grade as close as possible. Temporary erosion and sedimentation controls are proposed at the limit of disturbance to prevent any impact to undisturbed wetlands and 2:1 and 1.5:1 stabilized slopes are utilized whenever possible. The majority of the work will take place within the previously disturbed areas by converting an existing gravel path into a paved bicycle path. All wetland features as described in Section 1.5 are sensitive areas to be protected using erosion and sediment controls described more fully in section 2. Please see Attachment D, RIDEM Permit 05-0395 for other mandatory requirements.

1.11 Potential Sources of Pollution

Provide a description of potential sources of pollution that may reasonably be expected to affect the quality of storm water discharges from the site (i.e. exposed, un-stabilized soil stockpiles, clearing and grubbing operations, vehicle tracking, concrete washouts, diesel fuel, etc.) (IV.E.1.f)

Anticipated on this Project	Operation/ Location	Stormwater Pollutants
Yes	Clearing, grading, excavating, and unstabilized areas	Sediment; Trash/Debris
Yes	Construction Entrance	Sediment
Yes	Soil Stockpiles	Sediment
Yes	Paving operations	Sediment; Trash/Debris
No	Concrete washout and waste	Heavy metals; pH; Trash/Debris
No	Structure construction/ painting/ cleaning	Nutrients; pH; Trash/Debris; Toxic chemicals
No	Demolition and debris disposal	Sediment; Trash/Debris
No	Dewatering operations	Sediment; Nutrients
No	Drilling and blasting operations	Sediment; pH; Trash/Debris
Yes	Material delivery and storage	Sediment; Nutrients; Heavy metals; pH; Pesticides/Herbicides; Oil/Grease; Trash/Debris; Toxic chemicals
Yes	Material use during building process	Nutrients; heavy metals; pH; pesticides/herbicides; oil/grease; trash/debris; toxic chemicals
Yes	Solid waste/ trash/ debris	trash/debris; toxic chemicals
No	Hazardous waste	heavy metals; pH; pesticides/herbicides; oil/grease; toxic chemicals
No	Contaminated spills	Nutrients; heavy metals; pH; pesticides/herbicides; oil/grease; toxic chemicals
No	Sanitary/septic waste	Nutrients; pH; Bacteria/Viruses; toxic chemicals
No	Vehicle/equipment fueling and maintenance	Oil/Grease; Toxic chemicals
No	Vehicle/equipment use and storage	Oil/Grease; Toxic chemicals
Yes	Landscaping operations	Sediment; Nutrients; Trash/Debris
	Other:	
	Other:	

1.12 Site Plans

Attach site maps. For most projects, a series of site maps is recommended. The first should show the undeveloped site and its current features. An additional map or maps should be created to show the developed site or the major phases of development. (IV.E.1.a)

These maps must include:

- ☒ **Total area of development**
- ☒ **Total area of soil disturbance**
- ☒ **Pre- and post-development drainage patterns (Project Narrative)**
- ☒ **Approximate slopes anticipated after the completion of major grading activities**
- ☒ **The location of all erosion and sedimentation storm water control structures, including the location of any temporary or permanent retention or detention basins or other water quality control structures**
- ☒ **The location of all impervious structures**
- ☒ **The location and name of the receiving waters or separate storm sewer system and the ultimate receiving waters**
- ☒ Location of environmentally sensitive features/areas to be preserved (Section 1.10)
- ☐ Locations of all non-structural BMPs (material storage areas, concrete washouts, dumpsters, stockpiles, etc.)
- ☒ Locations of all waters of the State, including wetlands
- ☒ Locations of all endangered species habitats, historic sites, and natural heritage areas
- ☒ Direction(s) of stormwater flow
- ☒ Areas that will not be disturbed
- ☒ Locations and timing of stabilization measures
- ☐ Locations of material, waste, and/or equipment storage areas
- ☒ Locations of storm drain inlets and outfalls

SECTION 2: EROSION AND SEDIMENTATION CONTROLS

RIPDES Construction General Permit – Section IV.E.2.a

The purpose of erosion controls is to prevent sediment from moving onto, around, or off of the construction site. Properly installed and maintained erosion controls are the primary defense against sediment pollution.

Sedimentation controls are a second line of defense against moving sediment. The purpose is to prevent moving sediment from leaving the construction site and entering environmentally important areas.

Runoff controls are used to slow the velocity of concentrated water flows. By intercepting and diverting stormwater runoff to a stabilized outlet or treatment BMP, erosion and sedimentation are reduced.

Provide a description of measures that will be installed before and during the construction project to control pollutants in storm water discharges that will occur at the site. Such measures may include: perimeter controls, stock pile covering, storm drain inlet protection, check dams, and temporary seeding.

Include RIDOT Standard Specification or Standard Detail reference with maintenance requirements.

Please note: The operator should initiate appropriate vegetative practices on all disturbed areas as soon as possible but not more than fourteen (14) days after the construction activity in that area has temporarily or permanently ceased, unless the activity is to resume within twenty one (21) days. Section IV.E.2.a.i

2.1 Minimize Disturbed Area and Protect Natural Features and Soil

As far as is practicable, existing vegetation shall be protected and left in place, in accordance with the clearing limits shown on the approved Plans. Prior to any land disturbance activities commencing on the site, the Contractor shall physically mark limits of disturbance (LOD) on the site and any areas to be protected within the site, so that workers can see the areas to be protected.

Describe the areas that will be disturbed with each phase of construction and the BMPs (signs, fences, etc.) that will be used to protect those areas that should not be disturbed. Describe natural features identified earlier and how each will be protected during construction activity. Also describe how topsoil will be preserved.

- Temporary erosion and sedimentation controls are proposed at the limit of disturbance to prevent any impact to undisturbed wetlands. The majority of the work will take place within the previously disturbed areas by converting an existing gravel path into a paved bicycle path. Best Management Practices guidelines for soil erosion control will be followed to minimize any potential impacts to the wetland areas. Prior to any land disturbance activities commencing on the site, the contractor shall physically mark limit of disturbance (LOD) on the site and any areas to be protected within the site , so that workers can see areas to be protected by hay bales, silt fence and hay bale ditch erosion check STD. 9.4.0.

2.2 Phase Construction Activity

Proper sequencing of construction activities is essential to maximize the effectiveness of erosion and sediment control measures. Construction sequencing and timing of construction activities will include:

1. Installation of all erosion and sediment controls that are required to be in place and functional before any earthwork begins. This shall be done in accordance with Sections 201, 206 through 211 of the RIDOT Standard Specifications.
2. Upon acceptable completion of site preparation and installation of erosion and sediment controls, site construction activities may commence. Routine inspection and maintenance and/or modification of erosion and sediment controls while earthwork is being done is required.
3. Upon commencement of site construction activities, the operator shall initiate appropriate stabilization practices on all disturbed areas as soon as possible but not more than fourteen (14) days after the construction activity in that area has temporarily or permanently ceased, unless the activity is to resume within twenty one (21) days.
4. Final stabilization of any disturbed areas after earthwork has been completed.

Describe the intended construction sequencing and timing of major activities, including grading activities, road and utility installation, and building phases. The first phase should include all erosion and sediment controls that are required to be in place before earthwork begins. Phase II through XX may include erosion and sediment controls required while earthwork is being done. The final phase should include final stabilization BMPs.

- Phase I – BEFORE EARTHWORK
  - ☒ Description: Site Preparation - install hay bales as shown on General plans 1-11; install tree protection devices; clearing and grubbing; misc. items removed as required.
  - ☒ Duration: 1 month
  - ☒ BMP: hay bales and silt fence
  - ☒ Stabilization: no particular methods necessary at this phase
- Phase II – DURING EARTHWORK
  - ☒ Description: Grading and paving for proposed bikeway
  - ☒ Duration: 9 month
  - ☒ BMP: hay bales and silt fence
  - ☒ Stabilization: no particular methods necessary at this phase
- Phase III – FINAL STABILIZATION
  - ☒ Description: Repairing loam and seed areas, jute mesh on slopes as shown on plans
  - ☒ Duration: 1 month
  - ☒ BMP: hay bales and silt fence
  - ☒ Stabilization: inspecting and ensuring that new landscaping features and newly loam and seeded areas have stabilized

2.3 Phased Clearing/Grubbing

Only areas that can be reasonably expected to have active construction work being performed within 21-days of disturbance will be cleared/grubbed at any one time. It is NOT acceptable to clear and grub the entire construction site if portions will not be active within the 21-day time-frame. Proper phasing of clearing and grubbing activities shall include temporary stabilization techniques for areas cleared and grubbed that will not be active within the 21 day time frame.

No undisturbed areas shall be cleared of existing vegetation after October 15th of any calendar year or during any period of full or limited winter shutdown. All disturbed soils exposed prior to October 15 of any calendar year shall be seeded or protected by that date. Any such areas that do not have adequate vegetative stabilization, as determined by the resident engineer or environmental inspector, by November 15 of any calendar year, must be stabilized through the use of erosion control matting or hay mulch, in accordance with specifications contained within the RI Soil Erosion and Sediment Control Handbook. If work continues within any of these areas during the period from October 15 through April 15, care must be taken to ensure that only the area required for that Day's work is exposed, and all erodible soil must be restabilized within 5 working days.

Clearing/Grubbing shall not take place during a rain event if erosion is likely to occur; nor shall it occur if a rain event is forecasted and appropriate erosion controls can not be installed prior to the storm and in accordance with section 201, 206 through 211 of the RIDOT standard specifications.

As per RIDOT Standard Specification 201.03.1 – Clearing and Grubbing: After clearing, and by the end of each day's grubbing operation, the Contractor shall install erosion control measures that are indicated on the Plans or as directed by the Engineer. Such erosion control measures shall be installed in strict accordance with the requirements of **SECTIONS 206, 207,** and **208** of these Specifications, **PERIMETER EROSION CONTROLS, CHECK DAMS**, and **TEMPORARY DEWATERING BASINS**, respectively.

2.4 Monitoring Weather Conditions

Care will be taken to avoid having unstabilized areas exposed during precipitation events. Weather forecasts will be routinely checked, and in the case of an expected precipitation event of over 0.25-inches over a 24-hour period, all BMPs will be inspected, and maintained as necessary, prior to the weather event.

In the case of an extreme weather forecast (greater than one-inch of rain over a 24-hour period), additional erosion/sediment controls will be installed where appropriate.

List the weather gauge station that will be utilized to monitor weather conditions on the construction site. See www.wunderground.com or www.weather.gov for available stations.

- www.wunderound.com , Pawtucket KSFZ

2.5 Initiating Stabilization Practices

As per RIPDES General Permit (Construction Activity) Section IV.E.2.a: Upon completion and acceptance of site preparation and initial installation of erosion and sediment controls the operator shall initiate appropriate stabilization practices during all phases of construction on all disturbed areas as soon as possible but not more than fourteen (14) days after the construction activity in that area has temporarily or permanently ceased, unless the activity is to resume within twenty one (21) days.

2.6 Control Stormwater Flowing Onto and Through the Project

Structural BMPs are used to divert flows from exposed soils, retain or detain flows, or otherwise limit runoff and the discharge of pollutants from exposed areas of the site.

BMPs shall be installed as depicted on the approved plan set and in accordance with applicable RIDOT Standard Specifications.

If BMPs fail to control erosion and sedimentation, then alternative control measures &/or methods may be substituted, with approval of the RIDOT Resident Engineer and the RIDOT Natural Resources Unit. Additional control measures that may be used, upon approval, include compost filter socks, fiber rolls, gravel bag berms, slope drains, check dams, and riprap.

Describe structural practices (i.e., diversions, berms, ditches, storage basins) including design specifications and details used to divert flows from exposed soils, retain or detain flows, or otherwise limit runoff and the discharge of pollutants from exposed areas of the site.

- Hay bales and silt fence at toe of slope throughout project.

2.7 Stabilize Soils

Any disturbed areas that will not have active construction activity occurring within twenty one (21) days must be stabilized using the BMPs depicted on the approved plan set and in accordance with RIDOT Standard Specifications Section L.02 – Seeding, Section L.05 - Seed Stabilizers and Section M.18 – Landscape Materials (M.18.08 – Mulch and M.18.09 – Seed Stabilizer Materials).

If the stabilization BMPs fail and erosion occurs, then alternative control measures &/or methods may be substituted, with approval of the RIDOT Resident Engineer and the RIDOT Natural Resources Unit.

Describe controls (i.e., temporary seeding with native vegetation, hydroseeding, etc.) including design specifications and details that will be implemented to stabilize exposed soils where construction activities have temporarily or permanently ceased. Also describe measures to control dust generation. Use of impervious surfaces for stabilization should be avoided whenever possible.

- Any areas that will be disturbed by construction and not paved will be loamed and seeded.

2.8 Protect Slopes

Slopes that will have concentrated stormwater flow must be protected using the BMPs depicted on the approved plan set and in accordance with RIDOT Standard Specifications Sections 202, 206 – 211, or any method approved of by the RIDOT Resident Engineer and the RIDOT Natural Resources Unit.

If the slope stabilization BMPs fail and erosion occurs, then alternative control measures &/or methods may be substituted, with approval of the RIDOT Resident Engineer and the RIDOT Natural Resources Unit. Additional control measures that may be used, upon approval, include compost filter socks, fiber rolls, gravel bag berms, erosion control mats/blankets, and temporary vegetative cover.

Describe controls (i.e., erosion control blankets, tackifiers, etc.) including design specifications and details that will be implemented to protect all slopes.

- Loam and seed, rip rap at outlets, hay bales in accordance with the contract documents in order to protect slopes.

2.9 Protect Storm Drain Inlets

Storm drain inlet protection measures prevent soil and debris from entering storm drain inlets. These measures are usually temporary and are implemented before a site is disturbed. ALL stormwater inlets &/or catchbasins that are operational during construction and may receive sediment-laden stormwater flow from the construction site must be protected using any of the BMPs outlined in the RIDOT Standard Specifications Section 209 – Storm Drain Protection, or any method approved of by the RIDOT Resident Engineer and the RIDOT Natural Resources Unit.

Please note: **Haybale/Silt Fence protection measures DO NOT work on paved roadways.**

Additional control measures that may be used, upon approval, include compost filter socks, fiber rolls, gravel bag berms, or catch basin inserts.

Describe controls (i.e., inserts, rock-filled bags, or block and gravel, etc.) including design specifications and details that will be implemented to protect all inlets receiving stormwater from the project during the entire duration of the project.

- Silt fences, rip rap and hay bales

2.10 Protect Storm Drain Outfalls

Outfall protection is necessary to prevent scour or severe erosion at discharge points. Outfalls often have high velocity, high volume flows, and require strong materials that will withstand the forces of the water. The function of these BMPs is to protect the soil surface, reduce velocity, and promote infiltration. Storm drain outlet BMPs also offer a last line of protection against sediment entering environmentally sensitive areas.

All stormwater outfalls that may discharge sediment-laden stormwater flow from the construction site must be protected using the BMPs depicted on the approved plan set in accordance with Standard Specification Section 209, or any method approved of by the RIDOT Resident Engineer and the RIDOT Natural Resources Unit.

Additional temporary control measures that may be used, upon approval, include compost filter socks or fiber rolls.

Describe controls (i.e., inserts, rock-filled bags, or block and gravel, etc.) including design specifications and details that will be implemented to protect outlets discharging stormwater from the project during the entire duration of the project.

- Rip rap, hay bales and silt fence

2.11 Establish Perimeter Controls and Sediment Barriers

Perimeter controls shall be installed, and maintained, as depicted on the approved plan set and in accordance with RIDOT Standard Specifications Section 201, 206 – 211, Perimeter Erosion Controls (installation) and Section 212 – Maintenance and Cleaning of Erosion and Pollution Controls (maintenance).

If the Baled Hay &/or Silt Fence erosion checks fail to contain the sediment on-site, then alternative control measures may be substituted, with approval of the RIDOT Resident Engineer and the RIDOT Natural Resources Unit. Such measures may include (but are not limited to) compost filter socks or straw wattles (fiber rolls).

Describe structural practices (i.e., silt fences or fiber rolls) including design specifications and details to filter and trap sediment before it leaves the construction site.

- Hay bales, silt fence and rip rap

2.12 Retain Sediment On-Site and Control Dewatering Practices

Sediment traps, basins, and barriers are used to retain sediment on the site to protect streams, lakes, drainage systems, and adjacent property. These devices are used at the outlets of channels, diversions, and other runoff conveyance measures to allow sediment-filled water to pool and sediment to settle. These measures are often used as the last line of defense to stop sediment from leaving the site.

A sediment trap or basin shall be installed, and maintained, as depicted on the approved plan set and in accordance with RIDOT Standard Specifications - Sections 208, 210 (installation) and Section 212 – Maintenance and Cleaning of Erosion and Pollution Controls (maintenance).

The dewatering of non-contaminated non-stormwater (i.e. groundwater) or accumulated precipitation discharge of sediment-laden water into storm drains, streams, lakes or wetlands prior to sediment removal is prohibited. A sediment trap or basin shall be installed, and maintained, as depicted on the approved plan set and in accordance with RIDOT Standard Specifications - Sections 208, 210 (installation) and Section 212 – Maintenance and Cleaning of Erosion and Pollution Controls (maintenance).

The dewatering of contaminated non-stormwater cannot be discharged without prior notice and approval from either the Rhode Island Department of Environmental Management (RIDEM) or the Coastal Resources Management Council (CRMC). Should dewatering of contaminated water be occurring on this construction project, appropriate permits will have been obtained, and will be included as part of the Contract Documents.

Describe sediment control practices (i.e., sediment trap or sediment basin), including design specifications and details (volume, dimensions, outlet structure) that will be implemented at the construction site to retain sediments on-site. Describe dewatering practices that will be implemented if water must be removed from an area so that construction activity can continue.

- N/A

2.13 Additional BMPs

Describe additional BMPs that may not fit into the above categories.

- N/A

2.14 Construction Site Erosion and Sediment Control BMPs

Complete the following table for each location where Erosion and Sediment Control BMPs will be utilized. This table is to be used as part of the SWPPP Inspection Report – please fill out accordingly.

It is expected that this table will be amended as needed throughout the construction project.

Location/Station	BMP Description/ Standard Spec Ref	Maintenance Requirement	Phase
Perimeter	**Baled Hay Erosion Checks/Silt Fence. 206.01.3/9.3.0**	**212.03.1** Sediment accumulated greater than half way up bale; break through or significant strain of barrier	Phase I
706+02, RT	**Baled Hay Erosion Checks/Silt Fence. 207.01.1/9.4.0**	**212.03.1** Sediment accumulated greater than half way up barrier; break through or significant strain of barrier	Phase I
706+75, RT	**Baled Hay Erosion Checks/Silt Fence. 207.01.1/9.4.0**	**212.03.1** Sediment accumulated greater than half way up barrier; break through or significant strain of barrier	Phase I
707+50, RT	**Baled Hay Erosion Checks/Silt Fence. 207.01.1/9.4.0**	**212.03.1** Sediment accumulated greater than half way up barrier; break through or significant strain of barrier	Phase I
707+50, RT	**Baled Hay Erosion Checks/Silt Fence. 207.01.1/9.4.0**	**212.03.1** Sediment accumulated greater than half way up barrier; break through or significant strain of barrier	Phase I
740+83, RT	**Baled Hay Erosion Checks/Silt Fence. 207.01.1/9.4.0**	**212.03.1** Sediment accumulated greater than half way up barrier; break through or significant strain of barrier	Phase I
741+55, RT	**Baled Hay Erosion Checks/Silt Fence. 207.01.1/9.4.0**	**212.03.1** Sediment accumulated greater than half way up barrier; break through or significant strain of barrier	Phase I
741+90, RT	**Baled Hay Erosion Checks/Silt Fence. 207.01.1/9.4.0**	**212.03.1** Sediment accumulated greater than half way up barrier; break through or significant strain of barrier	Phase I
101+50, LT & RT	**Baled Hay Erosion Checks/Silt Fence. 207.01.1/9.4.0**	**212.03.1** Sediment accumulated greater than half way up barrier; break through or significant strain of barrier	Phase I
101+90, LT & RT	**Baled Hay Erosion Checks/Silt Fence. 207.01.1/9.4.0**	**212.03.1** Sediment accumulated greater than half way up barrier; break through or significant strain of barrier	Phase I
102+42, LT & RT	**Baled Hay Erosion Checks/Silt Fence. 207.01.1/9.4.0**	**212.03.1** Sediment accumulated greater than half way up barrier; break through or significant strain of barrier	Phase I

SECTION 3: GOOD HOUSEKEEPING BMPS

RIPDES Construction General Permit – Section IV.E.2.c

The purpose of good housekeeping is to prevent daily construction activities from causing pollution.

Describe the key good housekeeping and pollution prevention measures that will be implemented to control pollutants in stormwater. Examples BMPs include the proper management of waste, material handling and storage, and equipment/vehicle fueling/washing/maintenance operations.

Include RIDOT Standard Specification or Standard Detail reference with maintenance requirements.

3.1 Off-site Tracking of Sediments

Any construction site access point must employ the BMPs depicted on the approved plan set and in accordance with RIDOT Standard Specifications Section 211 – Construction Accesses, or any method approved of by the RIDOT Resident Engineer and the RIDOT Natural Resources Unit. Construction accesses shall be used in conjunction with the stabilization of construction roads to reduce the amount of mud picked up by construction vehicles. All RI STD 9.9.0 Construction Access roads shall be constructed prior to any roadway accepting construction traffic

If a Construction Access BMP is not designated on the plans, it is still the responsibility of the Operator to ensure that no sediment is tracked off of the construction site by any vehicles leaving the site. Additional control measures that may be used, upon approval, include a vehicle washing station and daily street sweeping.

The Operator shall remain responsible for the clean-up of any mud or dirt that is tracked onto streets or paved areas, even with the installation of gravel construction entrances. Inspect access for excessive sediment build up. Remove sediment and rebuild the exit as necessary to retain effectiveness and prevent off-site tracking. Additional street cleaning may be required if unable to retain sediment on site.

Describe location(s) of vehicle entrance(s) and exit(s), procedures to remove accumulated sediment off-site (i.e., vehicle tracking), and stabilization practices (i.e., stone pads and/or wash racks) to minimize off-site vehicle tracking of sediments and discharges to stormwater. IV.E.2.c.i

- Sediment, debris and over grown vegetation shall be removed manually at least once a year.

3.2 Waste Disposal

Building materials and other construction site wastes must be properly managed and disposed of to prevent the discharge of solid materials from wind and precipitation. All types of waste generated at the site shall be disposed of in a manner consistent with State Law and/or regulations.

- A waste collection area shall be designated on the site that does not receive a substantial amount of runoff from upland areas and does not drain directly to a waterbody or storm drain.
- All waste containers shall be covered to avoid contact with wind and precipitation.
- Waste collection shall be scheduled frequently enough to prevent containers from overfilling.
- All construction site wastes shall be collected, removed, and disposed of in accordance with applicable regulatory requirements and only at authorized disposal sites.

- Equipment and containers shall be checked for leaks, corrosion, support or foundation failure, or other signs of deterioration. Those that are found to be defective shall be immediately repaired or replaced.

Describe measures (i.e., trash disposal, sanitary wastes, recycling, and proper material handling) to prevent the discharge of solid materials. All types of waste generated at the site shall be disposed of in a manner consistent with State Law and/or regulations. IV.E.2.c.ii

- Any material not intended for use on the project shall be removed from the site as soon as is practicable. All wastes that are generated during construction shall be legally disposed of at an off site facility.

3.3 Spill Prevention and Control Plan

Spills and leaks shall be avoided through frequent inspection of equipment and material storage areas. Heavy equipment and other vehicles shall be routinely inspected for leaks and repaired as necessary. Material storage areas shall be routinely inspected for leaky containers, open containers, or improper storage techniques that may lead to spills or leaks. Appropriate cleanup procedures and supplies shall be available on-site.

Spills shall be cleaned up immediately and following proper response procedures and in accordance with any applicable regulatory requirements. At no time shall spills be cleaned and flushed down storm drains or in to any environmentally sensitive area (i.e. stream, pond, wetland).

Equipment/vehicle fueling and repair/maintenance operations or hazardous material storage shall not take place within regulated wetlands or buffer zone areas. Designated areas shall be approved by the RIDOT Resident Engineer.

Describe all areas where potential spills can occur, and their accompanying drainage points, and describe the spill prevention and control plan to reduce the chance of spills, stop the source of spills, contain and clean up spills, dispose of materials contaminated by spills, and train personnel responsible for spill prevention and control. IV.E.2.c.iii

- Hazardous substances could spill throughout the project area during construction. The potential for spills to enter the drainage system shall be eliminated wherever feasible. The contractor shall provide a submission indicating the type and location of spill clean-up equipment that will be made available to on-site personnel during construction. All hazardous wastes placed on-site shall have a secondary containment such as drum over packs or impermeable dikes with a volume capacity of at least 10 percent greater than the hazardous material volume. All hazardous materials shall be locked in a covered storage area accessible only to designated and properly trained staff. Any hazardous waste spills shall be cleaned up immediately; and, if the spill amount is equal to or exceeds the Environmental Protection Agency (EPA) Reportable Quantity (RQ) for that substance in accordance with 40 CFR parts 1010, 117, or 302, then the contractor shall immediately contact the National Response Center at 1-800-424-8802. The contractor will also be responsible for submitting a written description of the release to both the EPA Regional Office and the Rhode Island Department of Environmental Management. This written description shall provide the date and circumstances of the release and the steps to be taken to prevent another release. All manufacturer's directions for cleaning up spills shall be clearly posted at a designated on-site location, and construction personnel shall be made aware of the procedures and location of cleaning supplies. Personnel shall wear appropriate protective gear and have proper training to prevent injury from contact with any hazardous substances.

3.4 Control of Allowable Non-Storm Water Discharges

For the allowable non-stormwater discharge(s) associated with construction industrial activity identified in Section 1.6, describe controls and measures that will be implemented at those sites to minimize pollutant contamination. IV.E.2.c.iv

- N/A

3.5 Establish Proper Building Material Staging Areas

Stock pile management consists of procedures and practices designed to minimize or eliminate the discharge of stockpiled material (soil, topsoil, base material, rubble) from entering drainage systems or water courses.

Stockpiles of any material shall not be located within regulated wetlands or buffer zone areas. They shall have side slopes no greater than 30% and stockpiles of erodible material shall be seeded and ringed with RI STD 9.1.0 to stabilize (or RIDOT approved equivalent: berms, dikes, fiber rolls, compost socks, sandbag, gravel bags).

If soil stockpiles are not stabilized with vegetation, then they must be securely covered at the end of each workday.

All chemicals and/or hazardous waste material must be stored properly and legally in covered areas, with containment systems constructed in or around the storage areas. Areas must be designated for materials delivery and storage. Designated areas shall be approved by the RIDOT Resident Engineer.

Describe construction materials expected to be stored on-site and procedures for storage of materials to minimize exposure of the materials to stormwater. IV.E.2.c.v

- Field location will be approved by the engineer. Location and placement of stockpiled materials shall be such that erosion and damage to existing vegetation to remain minimized to the extent possible. Excavated material not intended for use on the project shall be removed from the site as soon as is practicable.

3.6 Designate Washout Areas

Concrete mixer trucks and chutes will be washed in a designated area or concrete wastes will be properly disposed of off-site. Washout areas for concrete, paint or any other material shall be designated on the Approved Plans, or approved of by the RIDOT Resident Engineer. Any washout area shall not be within regulated wetlands or buffer zone areas, or within 50-feet of the storm drain system.

Temporary concrete washout areas must be constructed and maintained to contain all water and concrete waste generated by washout operations. A sign should be placed at the washout site to inform concrete equipment operators of the facility location. Facilities must be cleaned or replaced when they reach 75% capacity.

At no time shall any material (concrete, paint, chemicals) be washed into storm drains, open ditches, streets, streams, wetlands, or any environmentally sensitive area.

Describe location(s) and controls to minimize the potential for stormwater pollution from washout areas for concrete mixers, paint, stucco, etc. IV.E.2.c.v

- There will not be any washout areas allowed on this project. Washout areas shall be off site.

3.7 Establish Proper Equipment/Vehicle Fueling and Maintenance Practices

Vehicle fueling shall not take place within regulated wetlands or buffer zone areas, or within 50-feet of the storm drain system. Designated areas shall be depicted on the Approved Plans, or shall be approved by the RIDOT Resident Engineer.

Vehicle maintenance and washing shall occur off-site, or in designated areas depicted on the Approved Plans or approved of by the RIDOT Resident Engineer. Maintenance or washing areas shall not be within regulated wetlands or buffer zone areas, or within 50-feet of the storm drain system. Maintenance areas shall be clearly designated, and berms, sandbags, or other barriers shall be used around the perimeter of the maintenance area to prevent storm water contamination.

Construction vehicles shall be inspected frequently for leaks. Repairs shall take place immediately. Disposal of all used oil, antifreeze, solvents and other automotive-related chemicals shall be according to applicable regulations; at no time shall any material be washed down the storm drain or in to any environmentally sensitive area.

Describe equipment/vehicle fueling and maintenance practices that will be implemented to control pollutants to stormwater (e.g., secondary containment, drip pans, spill kits, etc.) IV.E.2.c.v

- According to direction of the resident engineer and by appropriate regulations fueling and maintenance practices shall occur off site

3.8 Dust Control

Dust control procedures and practices shall be used to suppress dust on a construction site during the construction process, as applicable. Precipitation, temperature, humidity, wind velocity and direction will determine amount and frequency of applications. However, the best method of controlling dust is to prevent dust production. This can best be accomplished by limiting the amount of bare soil exposed at one time. RIDOT Standard Specifications Section 907 – Dust Control – shall be followed.

Other techniques for controlling dust may be utilized upon approval by the RIDOT Resident Engineer and the RIDOT Natural Resources Unit. Other Dust Control methods include surface roughening, wind barriers, walls, and covers.

Describe dust control practices that will be implemented to control pollutants to stormwater. IV.E.2.c.v

- RIDOT Standard Specifications Section 907 - Dust Control

3.9 Sweeping

Sweeping of streets, roads, highways and parking lots that have accumulated significant amounts of pollutants (construction site sediment, trash, debris) shall be done as necessary, or as directed by the RIDOT Resident Engineer.

When construction exits are not keeping construction site sediment from the roadway, sweeping shall be done on a daily basis.

Disposal of collected sweeping material shall follow RIDOT Standard Specifications Section 931 – Cleaning and Sweeping Pavement.

Describe sweeping practices and schedule that will be implemented to control pollutants to stormwater. IV.E.2.c.v

- Doreen Ann Tomlinson Sports Complex parking lot and Armistice Boulevard

3.10 Additional BMPs

Describe any additional BMPs that don't fit into the above categories. Indicate the problem they are intended to address.

- N/A

3.11 Construction Site Good Housekeeping BMPs

Complete the following table for each location where Good Housekeeping BMPs will be utilized. This table is to be used as part of the SWPPP Inspection Report – please fill out accordingly.

It is expected that this table will be amended as needed throughout the construction project.

Location/Station	BMP Description/ Standard Spec Ref	Maintenance Requirement	Phase
Construction Site Entrance/Exit	Rock/RipRap entrance pad **211.03/9.9.0**	Replenish/Replace aggregate if it becomes clogged with sediment and is no longer effectively preventing sediment from being tracked into street	All Phases
Adjacent Roads	Public roads adjacent to a construction site shall be clean at the end of each day **211.01.1**	Doreen Ann Tomlinson Sports Complex parking lot and Street Sweep if construction site sediment is visible	All Phases
Site Wide	Pick up of construction trash and debris	All loose trash and debris must be disposed of properly at the end of each working day	All Phases
	+		

SECTION 4: POST-CONSTRUCTION BMPs

RIPDES Construction General Permit – Section IV.E.2.b

Provide a description of measures that will be installed during the construction project to control pollutants in storm water discharges that will occur at the site after the construction operations have been completed.

Such measures may include: infiltration of runoff on-site, flow attenuation by use of open vegetated swales and natural depressions, vegetated buffer strips, and the use of detention/ retention structures. Where controls are needed to prevent or minimize erosion, velocity dissipation devices shall be placed at all outfall locations and along the length of any outfall channel as necessary to provide a non-erosive velocity flow from the structure to the receiving waters.

Include RIDOT Standard Specification or Standard Detail reference with maintenance requirements.

4.1 Post-Construction BMPs

Describe all post-construction stormwater management measures that will be installed during the construction process to control pollutants in stormwater discharges after construction operations have been completed.

- Rip rap outlet protection shall be installed list stations in order to dissipate energy and minimize potential erosive forces.

4.2 Low Impact Design Considerations

Low Impact Development (LID) is a stormwater management approach that emphasizes managing stormwater using decentralized micro-scale controls. LID's goal is to mimic a site's predevelopment hydrology by using design techniques that infiltrate, filter, store, evaporate, and detain runoff close to its source, instead of conveying and managing/ treating stormwater in large, end-of-pipe facilities located at the bottom of drainage areas. LID may not be appropriate for every project; however, LID techniques should be investigated and utilized to the maximum extent practicable.

For further information on LID design, visit: http://www.epa.gov/owow/nps/lid/

Describe how low impact design (LID) or smart growth considerations have been incorporated into the design.

- Grassed-swale storm water conveyances are recommended LID design.

4.3 Post-Construction BMPs

Complete the following table for each location where post-construction BMPs will be utilized. This table is to be used as part of the SWPPP Inspection Report – please fill out accordingly.

Location/Station	BMP Description/ Standard Spec Ref	Maintenance Requirement	Phase
Project Wide	Inspection of ditches, outfalls and rip rap on a semi-annual basis by the owner.	All trash and other liter must be removed during inspection. also include dressing with additional stone as conditions warrent	
Project Wide	Sediment, debris and overgrown vegetation shall be removed manually by owner at least once a year.	Reseeding as necessary if damage is done to vegetation	
Project wide	Grass areas	Shall be mowed by the owner at least once per growing season and should not be cut shorter than 4"	
Project wide	Eroded areas and bare areas	Shall be immediately repaired and reseeded by owner. Contractor shall also reseed any unstabilized areas after a full growing season at no additional expense to owner	

SECTION 5: MAINTENANCE and INSPECTIONS

RIPDES Construction General Permit – Section IV.E.2.d

5.1 Maintenance

Maintenance procedures for erosion and sedimentation controls and stormwater management structures/facilities are described on the plans, in **Section 212** of the RHODE ISLAND DEPARTMENT OF TRANSPORTATION *Standard Specifications for Road and Bridge Construction* 2004 EDITION (and Amendments), and in the Stormwater Management Analysis documentation.

Construction shall not commence or continue until all specified erosion and pollution controls are in place, properly installed and accepted by the Engineer.

Erosion and pollution controls shall be maintained by the Contractor to the satisfaction of the Engineer. Erosion and pollution controls must be able to prevent, under normal weather conditions, both the movement of soil materials and the intrusion of sediment-laden discharges into environmentally sensitive areas.

Erosion and pollution controls will be cleaned when directed by the Engineer; after a rainstorm; and/or when sediment deposits reach the heights indicated in the table provided in Section 212.03.1 of the RIDOT Standard Specifications.

Erosion control structures shall remain in place until all disturbed earth has been securely stabilized and accepted by RIDOT. Before final removal, all accumulated sediment on the upstream side shall be removed and legally disposed of. After removal of structures, disturbed areas shall be regraded and stabilized as necessary.

Note: The contractor is required to have a full-time, on-site designated contact person responsible for working with the RIDOT Resident Engineer and the RIDOT designated Environmental Compliance Manager (EMC) to resolve SWPPP-related issues.

5.2 Inspections

RIPDES Construction General Permit – Section II.B & Section II.D

Minimum Monitoring and Reporting Requirements

All storm water control measures, disturbed areas, areas used for the storage of materials that are exposed to precipitation (including unstabilized soil stockpiles), discharge locations, and locations where vehicles enter or exit the site must be inspected at least once every seven (7) calendar days and within twenty-four (24) hours after any storm event which generates at least 0.25-inches of precipitation per twenty four (24) hour period and/or after a significant amount of runoff or snowmelt. An appropriate rain gauge (as may be found on www.wunderground.com or www.nws.noaa.gov (or similar sites)) must be identified and utilized for the determination of the storm events.

General Notes

- A separate inspection report will be prepared for each inspection.
- The Inspection Reference Number shall be a combination of the Construction Contract Number - consecutively numbered inspections.
  ex/ Inspection reference number for the **4**th inspection of a project would be:
  2006-AA-BBB-4
- Each report will be signed and dated by the Inspector and forwarded to the Engineer within 24 hours of the inspection.
- Each report will be signed and dated by the Engineer and returned to the Inspector within 24 hours of receipt. The Engineer will also forward a copy of each signed and dated report to the Contractor's designated representative within the same time period.
- It is the responsibility of the RIDOT Resident Engineer to maintain a copy of the SWPPP, copies of all completed inspection reports, and amendments as part of the SWPPP documentation at the project field office during construction.

Submitting Monthly Reports

The inspector will submit a Monthly Inspection Report to:

RIDOT Natural Resources Unit
Two Capitol Hill, Rm. 368
Providence, RI 02903

At a minimum, the monthly inspection report will include:

- A summary narrative of the month's inspections.
  - Introduction – inspector, rain gauge information
  - Summary of Site Activities – # of investigations; date(s) of weather events resulting in at least 0.25" of precipitation in a 24-hour period or significant snowmelt.
  - Site Review and Discussion – for each inspection, a paragraph including date, time, weather, and precipitation events; general observations, issues, actions taken to resolve previous inspection's corrective actions; ongoing issues; associated photo/figure numbers
  - Outstanding Issues – continued erosion and sediment control issues not addressed since previous month's inspection report
  - Summary
- A copy of each completed, dated, and signed inspection report
- Associated photos – each photo should be dated and have a unique identification # and written description indicating where it is located within the project area. If a close up photo is required, it should be preceded with a photo including both the detail area and some type of visible fixed reference point. Photos should be annotated with Station numbers and other identifying information where needed.
- A copy of the daily rainfall summary data for the month as reported by the selected rain gauge.
- A CD containing a complete copy of all portions of the monthly report in .pdf format.

One copy of the monthly inspection report will be printed double-sided (except for photo or plan sheet pages), bound, and forwarded to the NRU by no later than the 10th of the month following the end of the reporting period.

Attach a copy of the inspection report.

- (See Attachment "F" for sample SWPPP inspection report form and instructions)

5.3 Corrective Actions

RIPDES Construction General Permit – Section II.C

If, in the opinion of the Engineer, corrective action is required, the Engineer shall note it on the inspection report and shall notify and direct the Contractor to take corrective action and make all necessary repairs whenever maintenance of the erosion and pollution controls is required.

In accordance with the General Permit and the SWPPP, non-compliance issues shall be addressed no later than seven (7) calendar days from the date of inspection.

In accordance with the SWPPP and Section 212 of the RIDOT Standard Specifications, the Contractor shall commence with the requisite cleaning and maintenance measures no later than the next consecutive calendar day after receiving such a directive from the Engineer, and shall aggressively and expeditiously perform such cleaning and maintenance work until the original problem is remedied to the complete satisfaction of the Engineer.

If the Engineer decides on any given day that those erosion and pollution controls specified in the Contract are not in place or have not been adequately maintained as specified in this Section, the daily charge set forth in **Special Provision Code 212.1000** will be deducted from monies due the Contractor as a charge for failure to comply with this Specification. Moreover, the stated daily charge will continue each consecutive calendar day thereafter until the deficiencies noted have been corrected to the complete satisfaction of the Engineer.

Attach a copy of the Corrective Action Log.

- (See Attachment "G" for sample Corrective Action Log)

5.4 Long-term Maintenance

Once construction has been completed and has received Final Acceptance, it is the responsibility of RIDOT to inspect and maintain all storm water structures on a regular basis.

At the time of Final Inspection, the RIDOT Highway and Bridge Maintenance Division will appoint an individual who will be responsible for conducting inspections and maintaining records.

The stormwater management system requires regular maintenance to function at its designed constituent removal efficiency. The RIDOT, or subsequent owners, will be responsible for the inspection, maintenance, and repairs to the stormwater management structures on the Site. At a minimum, the following inspection actions are to be taken and inspection reports kept on file by RIDOT:

For each post-construction stormwater structure, provide inspection and maintenance requirements

Descriptive Location	BMP Description	Inspection Requirement	Maintenance Requirement
N/A	N/A	N/A	N/A

Attach a copy of the inspection report and inspection log

- (See Attachment "I" for sample BMP Post-Construction inspection report)
- (See Attachment "J" for sample BMP Post-Construction inspection log)

SECTION 6: Amendments

RIPDES Construction General Permit – Section IV.D

This SWPPP is intended to be a working document. It is expected that amendments will be required throughout the construction of the project. **Even if practices are installed on a site according to the approved plan, the site is only in compliance when erosion and sedimentation are effectively controlled throughout the entire site.**

The SWPPP shall be amended whenever there is a change in design, construction, operation, maintenance or other procedure which has a significant effect on the potential for the discharge of pollutants, or if the SWPPP proves to be ineffective in achieving its objectives (i.e. the selected BMPs are not effective in controlling erosion or sedimentation).

All revisions must be recorded in the Record of Amendments Log Sheet within the SWPPP, and dated red-line drawings and/or a detailed written description must be appended to the SWPPP. Inspection Forms must be revised to reflect all amendments. Update the Revision Date and the Version # in the footer of the Report to reflect amendments made.

All SWPPP Amendments, except minor non-technical revisions, must be approved by the Resident Engineer.

Attach a copy of the Amendment log

- (See Attachment "H" for sample Amendment log)

SECTION 7: Recordkeeping

RIPDES Construction General Permit – Section II.A & Section II.D

It is the RIDOT Resident Engineer's responsibility to have the following documents at the Field Office and immediately available for RIDEM review upon request:

- A copy of the fully signed and dated SWPPP, which includes:
  - The signed and certified NOI form or permit application form
    INCLUDED AS ATTACHMENT _____
  - A copy of the RIPDES General Permit
    INCLUDED AS ATTACHMENT _____
  - A copy of any regulatory permits (RIDEM Freshwater Wetlands Permit, CRMC, RIDEM Water Quality, etc)
    INCLUDED AS ATTACHMENT _____
  - Corrective Action Log
    INCLUDED AS ATTACHMENT _____
  - SWPPP Amendment Log
    INCLUDED AS ATTACHMENT _____

- Copies of all signed and dated Inspection reports

SECTION 8: Party Certifications

All parties working for the Rhode Island Department of Transportation are required to comply with the Stormwater Pollution Prevention Plan (SWPPP) for any work that is performed on-site. Any person or group who violates any condition of the SWPPP may be subject to substantial penalties or loss of contract. Contractors and Sub-Contractors are encouraged to advise all employees working on this project of the requirements of the SWPPP. A copy of the SWPPP is available for your review at the RIDOT Field Office, or may be obtained from the RIDOT Natural Resources Office by calling (401) 222-2023.

The prime contractor and each subcontractor engaged in activities at the construction site that could impact stormwater must be identified and sign the following certification statement.

I acknowledge that I have read and understand the terms and conditions of the SWPPP for the above designated project and agree to follow the BMPs and practices described in the SWPPP.

RIDOT Resident Engineer:
Insert Company or Organization Name
Insert Name & Title
Insert Address
Insert City, State, Zip Code
Insert Telephone Number, Insert Fax/Email

_____
signature/date

RIDOT SWPPP Inspector:
Insert Company or Organization Name
Insert Name & Title
Insert Address
Insert City, State, Zip Code
Insert Telephone Number, Insert Fax/Email

_____
signature/date

Contractor SWPPP Contact:
Insert Company or Organization Name
Insert Name & Title
Insert Address
Insert City, State, Zip Code
Insert Telephone Number, Insert Fax/Email

_____
signature/date

SubContractor SWPPP Contact:
Insert Company or Organization Name
Insert Name & Title
Insert Address
Insert City, State, Zip Code
Insert Telephone Number, Insert Fax/Email

_____
signature/date

Insert more contact/signature lines as necessary

SWPPP APPENDICES

Attach the following documentation to the SWPPP:

Attachment A – General Location Map (See Plan Cover Sheet)

Attachment B – Site Plans (See full Construction Plan Set)

Attachment C – Copy of RIPDES General Permit

Attachment D – Copy of Regulatory Permits

Attachment E – Copy of RIPDES NOI (N/A)

Attachment F – Inspection Reports

Attachment G – Corrective Action Log

Attachment H – Amendments Log

Attachment I – Post-Construction BMP Inspection Reports

Attachment J – Post-Construction BMP Inspection Log

SPECIFICATIONS – JOB SPECIFIC

Index

Item	Description	Page
12.108.03	Prosecution and Progress	JS-1
12.108.1000	Prosecution and Progress	JS-2
212.2000	Cleaning and Maintenance of Erosion Control	JS-3
401.9901	Bituminous Base Course Superpave Mix - 19 mm	JS-3A
401.9901	Bituminous Base Course Superpave Mix - 4.75 mm	JS-3D
701.9901	12-Inch HDPE Pipe Flared End Section	JS-4
701.9902	Precast Concrete Box Culvert 2'X2'X24'	JS-5
702.9901	Furnish and Install 24" Diameter PVC Drain Basin W/ 24" Hinged Standard Grate	JS-6
808.9901	Poured-In-Place Cement Concrete Steps With Handrails	JS-7
901.9901	Furnish and Install Wood Post - 12" SQ Pressure Treated	JS-8
901.9902	Remove and Relocate Wood Post	JS-9
902.9901	Cedar Post Rail Fence	JS-10
902.9902	Vehicle Barrier Rail	JS-11
902.9903	Furnish and Install Cedar Fence, 42" to Top of Board (3 Board with Square Posts)	JS-12
902.9904	Furnish and Install Fence 42" to Top of Rail (3 Rail with Round Posts)	JS-13

SPECIFICATIONS – JOB SPECIFIC

Index

Item	Description	Page
902.9905	Furnish and Install Cedar Fence W/ Wire Mesh (Square Posts)	JS-14
910.9901	Furnish and Install Woven Geotextile Fabric	JS-15
911.9902	Furnish and Install Segmental Block Retaining Wall System	JS-18
937.0200	Maintenance and Movement of Traffic Protective Devices	JS-26
938.1000	Price Adjustments	JS-26A
942	Detectable Warning Panel	JS-26C
L01.9901	Loam Borrow 6 Inches Deep	JS-27
L.02.9901	Wild Flower Seed Mix	JS-28
L.05.9901	Permanent Erosion Control Blanket	JS-28A
L.06.1000	Planting	JS-29
L.06.9925	Watering Project Wide	JS-30
L11.9901	Furnish and Install Tree Protection Railing	JS-31
L15.9901	6' Recycled Plastic Lumber Bench	JS-32
L15.9902	Furnish and Install Hinged Bollard	JS-33
L15.9903	Remove and Salvage Metal Gate	JS-34
L15.9905	Root Barrier Treatment For Existing Trees	JS-34A
T11.9901	Furnish and Install Early Warning Systems	JS-35

SPECIFICATIONS – JOB SPECIFIC

Index

Item	Description	
T15.9901,	Bikeway Entrance Sign	JS-36
T15.9902	Trail Head Sign	
T15.9903	Trail Information Sign	
T15.9904	D.A. Tomlinson Sports Complex	
T15.9905	Slater Memorial Park	
T15.9906	Parkside Avenue	
T15.9907	Ten Mile River Greenway Sign	
T19.9901	Mile Post Marker 4"x4"x72"	JS-39
T20.9901	Word or Symbol Epoxy Resin Pavement Marking	JS-40

JOB SPECIFIC
R.I. CONTRACT NO. 2011-CH-084

CODE 401.9901
BITUMINOUS BASE COURSE, SUPERPAVE MIX - 19 MM

Description:

Hot Mix Asphalt (HMA) shall conform to the requirements of the RI Standard Specifications for Road and Bridge Construction with the following exceptions and modifications.

Materials:

1. Aggregate

The aggregate shall conform to the 3 to <10 million ESAL requirements of Table 5 in AASHTO M 323. No more than 10% of the aggregate shall be natural sand. All aggregate properties of Section M.03 shall apply.

2. Performance Graded Binder

The binder shall meet the requirements of PG 64-22, Grade S as specified in AASHTO M 320 and MP 19. Table 2 of AASHTO M 323 shall be used to determine any changes to the binder grade.

3. Mix Design

HMA mixes shall conform to AASHTO M 323, "Standard Specification for Superpave Volumetric Mix Design". The design procedure shall follow AASHTO R 35 "Standard Practice for Superpave Volumetric Design for Hot-Mix Asphalt (HMA)". The design specifications found in AASHTO M 323 shall supersede those found in the Standard Specifications for Road and Bridge Construction. A mix design using PG64-22 Grade S shall be used to determine the design binder content. The following specific requirements and exceptions to AASHTO M 323 shall apply.

a. Mixes shall be designed with 0%, 10%, 15%, 20% or 25% RAP content.

b. $N_{initial}$ shall be 6, N_{design} shall be 50 and N_{max} shall be 75 gyrations.

c. A moisture susceptibility test will not be required.

d. The mix shall be designed at 4% voids.

e. The VMA shall be greater than or equal to 14.5%.

f. The VFA shall be 70 to 80 percent.

g. The mix shall be coarse graded as defined in Section 6.1.3 of AASHTO M 323.

h. The dust to binder ratio ($P_{0.075}/P_{be}$), 0.5 – 1.0. The design effective binder content shall be used to calculate this ratio.

In addition to the sieves listed in Table 3 of AASHTO M 323, the 0.600 mm, 0.300 mm and 0.150 mm sieves will be required. The 50.0 mm and 37.5 mm sieves will not be required.

The following procedures shall be adhered to for the mix design:

- Three trial blends shall be submitted and approved before beginning the mix design procedure.
- All trial mixture data and calculations determined for Section 9 of AASHTO R 35 shall be submitted to the Engineer. The Engineer will determine which trial mixture shall be used for the mix design procedure.
- After the mix design is completed it shall be submitted to the Engineer for approval.

The gyratory cores and Rice (AASHTO T 209) samples at the design binder content shall be submitted to the Engineer.

A successful plant trial batch shall be performed before production of the HMA begins.

Construction Methods.

1. Plant Laboratory

In addition to the requirements of Section 930, the contractor provided lab shall be equipped with the following:

Gyratory compactor conforming to AASHTO T 312 and two molds.

All equipment required to determine the theoretical maximum specific gravity in accordance with AASHTO T 209 Test Method A and Section 13.1. A metal pycnometer and electronic digital vacuum gauge shall also be provided.

All sieves required for the mix design process.

Facilities and equipment to perform a wet-wash in accordance with AASHTO T-30 and a faucet spray hose shall be provided.

2. Mix Production

The following mix production tolerances shall apply:

a. The production air voids (V_a) shall be 3.0 – 5.0 percent.

b. The voids in mineral aggregate (VMA) shall be 14.5% minimum.

c. The percent passing the #200 sieve shall be greater than or equal to 2.0%.

The following tolerances for gradation shall apply:

25.0mm	100%
19.0mm	90% - 100%
12.5mm	90% max
2.36mm	Established by the mix design ± 5%

Method of Measurement.

Subsection 401.04 of the RI Standard Specifications for Road and Bridge Construction will be used as the method of measurement.

Basis of Payment.

Subsection 401.05 of the RI Standard Specifications for Road and Bridge Construction will be used as the basis of payment.

JOB SPECIFIC
R.I. CONTRACT NO. 2011-CH-084

CODE 401.9902
BITUMINOUS SURFACE COURSE, SUPERPAVE MIX - 4.75 MM

Description:

Hot Mix Asphalt (HMA) shall conform to the requirements of the RI Standard Specifications for Road and Bridge Construction with the following exceptions and modifications.

Materials:

1. Aggregate

The aggregate shall conform to the 3 to <10 million ESAL requirements of Table 5 in AASHTO M 323. No more than 20% of the aggregate shall be natural sand. All aggregate properties of Section M.03 shall apply.

2. Performance Graded Binder

The binder shall meet the requirements of PG 64-28, Grade S as specified in AASHTO M 320 and MP 19.

3. Mix Design

HMA mixes shall conform to AASHTO M 323, "Standard Specification for Superpave Volumetric Mix Design". The design procedure shall follow AASHTO R 35 "Standard Practice for Superpave Volumetric Design for Hot-Mix Asphalt (HMA)". The design specifications found in AASHTO M 323 shall supersede those found in the Standard Specifications for Road and Bridge Construction. A mix design using PG64-28 Grade S shall be used to determine the design binder content. The following specific requirements and exceptions to AASHTO M 323 shall apply.

a. $N_{initial}$ shall be 6, N_{design} shall be 50 and N_{max} shall be 75 gyrations.

b. A moisture susceptibility test will not be required.

c. The mix shall be designed at 4% voids.

d. The VMA shall be greater than or equal to 17.5.

e. The VFA shall be 70 to 80 percent.

f. The mix shall be coarse graded as defined in Section 6.1.3 of AASHTO M 323.

g. The dust to binder ratio ($P_{0.075}/P_{be}$), 0.5 – 1.0. The design effective binder content shall be used to calculate this ratio.

h. No RAP will be allowed in the mix.

In addition to the sieves listed in Table 3 of AASHTO M 323, the 0.600 mm, 0.300 mm and 0.150 mm sieves will be required. The 50.0 mm and 37.5 mm sieves will not be required.

The following procedures shall be adhered to for the mix design:

- Three trial blends shall be submitted and approved before beginning the mix design procedure.
- All trial mixture data and calculations determined for Section 9 of AASHTO R 35 shall be submitted to the Engineer. The Engineer will determine which trial mixture shall be used for the mix design procedure.
- After the mix design is completed it shall be submitted to the Engineer for approval.

The gyratory cores and Rice (AASHTO T 209) samples at the design binder content shall be submitted to the Engineer.

A successful plant trial batch shall be performed before production of the HMA begins.

Construction Methods:

1. Plant Laboratory

In addition to the requirements of Section 930, the contractor provided lab shall be equipped with the following:

Gyratory compactor conforming to AASHTO T 312 and two molds.

All equipment required to determine the theoretical maximum specific gravity in accordance with AASHTO T 209 Test Method A and Section 13.1. A metal pycnometer and electronic digital vacuum gauge shall also be provided.

All sieves required for the mix design process.

Facilities and equipment to perform a wet-wash in accordance with AASHTO T-30 and a faucet spray hose shall be provided.

2. Mix Production

The following mix production tolerances shall apply:

a. The production air voids (V_a) shall be 3.0 – 5.0 percent.

b. The production voids in mineral aggregate (VMA) shall be 17.5% minimum.

c. The percent passing the #200 sieve during production shall be greater than or equal to 2.0%.

The following tolerances for gradation shall apply:

12.5mm	100%
9.5mm	95% - 100%
4.75mm	85% - 100%
1.18mm	Established by the mix design ± 5%

xxx.04 Method of Measurement.

Subsection 401.04 of the RI Standard Specifications for Road and Bridge Construction will be used as the method of measurement.

xxx.05 Basis of Payment.

Subsection 401.05 of the RI Standard Specifications for Road and Bridge Construction will be used as the basis of payment.

JOB SPECIFIC
R.I. CONTRACT NO. 2011-CH-084
CODE 808.9901

POURED-IN-PLACE CEMENT CONCRETE STEPS WITH HANDRAILS

Description: this item of work shall consist of furnishing and installing poured in place cement concrete steps in accordance with construction drawings and as directed by the Engineer. Without limiting the generality of the item it shall include:

Formwork, shoring bracing and anchorage.
Concrete reinforcement and accessories
Cast-in-place concrete.
Railing

All information contained in Section 808 and M.02 of the R.I. Standard Specifications for Road and Bridge Construction 2004 edition, as pertains to the concrete steps will apply with the following exceptions:

Materials: All cement shall be Class XX (AE) 1 ½"

Method of Measurement: Poured-place-Cement Concrete Steps will be measured by the unit "lump sum" installed in accordance with the Contract Specification, complete in place.

Basis of Payment: Poured-in-place Cement Concrete Steps will be paid for at the contract unit price per "Lump Sum" as listed in the Proposal. This payment shall constitute full and complete compensation for furnishing and installing the concrete steps, railing and for all labor, materials, equipment, and tools and all other incidentals required to complete the work to the satisfaction of the Engineer.

JOB SPECIFIC
R.I. CONTRACT NO. 2011-CH-084

CODE 901.9902
REMOVE AND DISPOSE WOOD POST

DESCRIPTION: This work consist of removing and disposing wood posts as indicated on the plans or directed by the Engineer in accordance with these specifications.

MATERIALS: Not Applicable

CONSTRUCTION METHODS:

Removing and Disposing Wood Posts. Wood Posts shall be removed and disposed as indicated on the plans or directed by the Engineer. The Contractor shall replace at his own expense, any material damaged or lost due to his methods of removing, and the replacement material shall be of the type and kind that was damaged.

METHOD OF MEASUREMENT: "Remove and Dispose Wood Post" will be measured by "EACH" removed and relocated.

BASIS OF PAYMENT: "Remove and Dispose Wood Post" shall be paid for at the contract unit price bid per "EACH" as listed in the proposal. The price so stated shall constitute full and complete compensation for all labor, materials, tools, excavation, and equipment required to complete the work in accordance with this special provision, complete and accepted by the Engineer.

CODE 938.1000

PRICE ADJUSTMENTS

DESCRIPTION.

a. Liquid Asphalt Cement *. The Base Price of Liquid Asphalt Cement as required to implement **Subsection 938.03.1** of the Standard Specifications is $ 520.00 per ton as of March 7, 2011.

* In case of modified asphalt binder, this price adjustment provision shall only apply to the neat liquid asphalt component. This provision shall not apply to the modifier component, manufacture, storage, transportation, or other associated costs.

b. Diesel Fuel. The Base Price of Diesel Fuel as required to implement **Subsection 938.03.2** of the Standard Specifications is $ 3.3015 per gallon as of April 1, 2011.

2012 DIESEL FUEL PRICES

January 3, 2012	**$ 3.0955**
January 16, 2012	**$ 3.2028**
February 1, 2012	**$ 3.2169**

LIQUID ASPHALT PRICES

Historical Prices Provided by the Hudson Companies for Projects Advertised Prior to April 15, 2010

November 15, 2008	**$ 745.00**	**July 15, 2011**	**$ 670.00***
March 15, 2009	**$ 550.00***		
March 7, 2011	**$ 520.00***		
May 1, 2011	**$ 620.00***		
June 1, 2011	**$ 695.00***		
July 1, 2011	**$ 680.00***		

Note this price is in effect for all contracts advertised prior to April 15, 2010 All Other Projects Will Use The Schedule of Prices listed Below From Asphalt Weekly Monitor

2012 LIQUID ASPHALT PRICES

January 3, 2012	**$ 575.00**
January 16, 2012	**$ 575.00**
February 1, 2012	**$ 590.00**

SECTION 942

DETECTABLE WARNING PANEL

942.01 DESCRIPTION. This work consists of providing and installing a panel with truncated domes in an arrayed pattern that is compliant with Americans with Disabilities Act (ADA) warning and directional systems for the visually impaired at locations indicated on the Plans or as directed by the Engineer, all in accordance with these Specifications.

942.02 MATERIALS. The detectable warning panel shall be of dimension and color contrast within ADA standards and the discretion of the Engineer. Panels with integrally cast domes shall be either cast iron or ductile iron; the mat shall be manufactured with integral embedment lugs for the express installation into fresh unset Portland cement concrete.

942.03 CONSTRUCTION METHODS.
942.03.1 Panel Installation. Panels shall be set flush into fresh unset concrete at the required line and grade to match the running grade and cross slope of the ADA accessible ramp or blended transition that warranted the installed panel. The contractor shall ensure that the alignment of the panel will match line and grade of the ramp such that the panel is flush with the ramp, and there is no physical conflict with other castings, fittings, structures, foundations or appurtenance thereof.

942.04 METHOD OF MEASUREMENT. "Detectable Warning Panel" will be measured by the number of square feet of panel actually installed in accordance with the Plans and/or as directed by the Engineer.

942.05 BASIS OF PAYMENT. The accepted quantities of "Detectable Warning Panel" will be paid for at the contract unit price per square foot as listed in the Proposal. The price so-stated shall constitute full and complete compensation for all labor, materials, equipment, and other incidentals required to finish the work, complete and accepted by the Engineer.

JOB SPECIFIC
R.I. CONTRACT NO. 2011-CH-084
CODE L.05.9901
PERMANENT EROSION CONTROL BLANKET

L.05.01 DESCRIPTION. This work shall consist of placing a permanent erosion control blanket on prepared and sound embankment surfaces at the locations indicated on the Plans or as directed by the Engineer, all in accordance with these Specifications.

L.05.02 MATERIALS. The extended-term double net erosion control blanket shall be a machine-produced 100% biodegradable blanket of 70% agricultural straw and 30% coconut fiber with a functional longevity of up to 18 months. (Note: functional longevity may vary depending upon climatic conditions, soil, geographical location, and elevation). The blanket shall be of consistent thickness with the straw and coconut evenly distributed over the entire area of the mat. The blanket shall be covered on the top and bottom sides with 100% biodegradable woven natural organic fiber netting. The top netting shall consist of machine directional strands formed from two intertwined yarns with cross directional strands interwoven through the twisted machine strands (commonly referred to as a Leno weave) to form an approximate 0.05 x 1.0 (1.27 x 2.54 cm) mesh. The blanket shall be sewn together on 1.50 inch (3.81 cm) centers with degradable thread.

The blanket shall meet requirements established by the Erosion Control Technology Council (ECTC) Specification and the US Department of Transportation, Federal Highway Administration's (FHWA) Standard Specifications for Construction of Roads and Bridges on Federal Highway Projects, FP-03 Section 713.17 as a type 3.B Extended-term Erosion Control Blanket.

The Blanket can consist of installation staple patterns clearly marked on the erosion control blanket with environmentally safe paint. The blanket shall be manufactured with a colored thread stitched along both outer edges (approximately 2-5 inches from the edge) as an overlap guide for adjacent mats.

	Material Content	
Matrix	70% Straw Fiber	0.35 lbs/square yard
	30% Coconut Fiber	0.15 lbs/square yard
Nettings	Top - Leno Woven 100% Biodegradable organic jute	9.3 lb/ 1000 square feet
	Bottom – 100% biodegradable organic jute fiber	7.7 lb/ 1000 square feet
Thread	Biodegradable	

Index Value Properties:

Property	Test Method	Typical
Thickness	ASTM D6525	0.28 in
Resiliency	ECTC Guidelines	86%
Water Absorbent	ASTM D1117	169%
Mass/Unit Area	ASTM 6475	9.66 oz/square yard
Swell	ECTC Guidelines	46%
Smolder Resistance	ECTC Guidelines	Yes
Stiffness	ASTM D1388	0.42 oz-inch
Light Penetration	ECTC Guidelines	14.1%
Tensile Strength – MD	ASTM D6818	164.4 lbs/ft
Elongation – MD	ASTM D6818	7.2%
Tensile Strength – TD	ASTM D6818	226.8 lbs/ft
Elongation - TD	ASTM D6818	10.1%

Bench Scale Testing* (NTPEP):

Test Method	**Parameters**	**Results**
ECTC Method 2 Rainfall	50 mm(2in)/hr for 30 min	SLR** = 9.98
	100 mm(4in)/hr for 30 min	SLR** = 13.01
	150 mm(6in)/hr for 30 min	SLR** = 16.95
ECTC Method 3 Shear Resistance	Shear at 0.50 inch soil loss	2.27 lbs/square feet
ECTC Method 4 Germination	Top Soil, Fescue, 21 day incubation	723% improvement of biomass
*Bench Scale tests should not be used for design purposes		
** Soil Loss Ratio = Soil loss with Bare Soil/Soil Loss with RECP (Soil loss is based on regression analysis)		

Performance Design Values:

Maximum Permissible Shear Stress	
Un-vegetated Shear Stress	2.10 lbs/square feet
Un-vegetated Velocity	8.00 ft/s

Slope Design Data: C Factors			
	Slope Gradients (S)		
Slope Length (L)	≤ 3:1	3:1 – 2:1	≥ 2:1
Less than or equal to 20 ft	0.001	0.029	0.063
20-50 ft	0.051	0.055	0.092
Greater than or equal to 50ft	0.10	0.080	0.120

Roughness Coefficients –Un-vegetated	
Flow Depth	Manning's n
≤0.50 ft	0.050
0.50 – 2.0 ft	0.050 – 0.018
≥2.0 ft	0.018

L.05.03 CONSTRUCTION METHODS. The Contractor shall place erosion control blankets in accordance with Section L.05.03 of the Rhode Island Department of Transportation Standard Specifications for Road and Bridge Construction.

L.05.04 METHOD OF MEASUREMENT. "Permanent Erosion Control Blanket" will be measured by the number of square yards installed in accordance with the Plans, and/or as

L.05.05 BASIS OF PAYMENT. The accepted quantity of "Permanent Erosion Control Blanket" will be paid for at the contract unit price per square yard as listed in the Proposal. The price so-stated constitutes full and complete compensation for all labor, materials and equipment and for all incidentals required to finish the work, complete and accepted by the Engineer.
directed by the Engineer.

Date: 02/07/12
RICN: 2011-CH-084

JOB SPECIFIC
R.I. CONTRACT NO. 2011-CH-084
CODE L15.9905
ROOT BARRIER TREATMENT FOR EXISTING TREES

DESCRIPTION: The work to be performed under this special provision shall consist of the furnishing and installation of root barrier material to the root pruned areas of the existing trees, as noted on the plans, in accordance with these specifications.

MATERIALS: The materials shall be one of the following:

Century Root Barrier CP36-2	http://www.centuryrootbarrier.com/cppanels.html
DeepRoot 36-2	http://www.deeproot.com/products/root-barriers/applications/36q48q-universal-guide.html
Vespro Root Solutions RS-36	http://www.vesproinic.com/root-barrier-specifications.htm#rootbarrierspecs

CONSTRUCTION METHODS: All excavation for the root barrier will be done while the excavation is being done for the new paved path. Root barrier will be installed after the root trimming is done. Backfilling will be done when the backfill is being done for the paved path.

All construction operations within the root system shall be accomplished in a manner so that the health of the tree is not compromised. Heavy equipment shall NOT be permitted to traverse the root zone. Installation of the root barrier will be in accordance with the manufactures directions. Backfill and compaction can continue as required for construction following the proper placement of the root barrier.

All work must be done under direct in-site supervision of a RIDOT Landscape Representative.

METHOD OF MEASUREMENT: "Root Barrier Treatment For Existing Trees" will be measured by the linear foot complete in place and accepted by the Engineer.

BASIS OF PAYMENT: "Root Barrier Treatment For Existing Trees" will be paid for at the contract unit price per linear foot, which price will constitute full compensation for all materials, labor, tools, equipment and incidentals necessary to complete the work to the satisfaction of the Engineer. Excavation and backfill will not be paid for in this item but will be included in unit price for the contract items.

Table of Contents - Distribution of Quantities

Project Name - Ten Mile River - Segment 7A
Estimate Name - Addendum No. 2
R.I. Contract No. - 2011-CH-084
FAP Nos: HPP-0367(002)

ItemCode	Description	Page
201.0301	**CUTTING AND DISPOSING ISOLATED TREES AND STUMPS (4"- 24")**	**1**
201.0302	CUTTING AND DISPOSING ISOLATED TREES AND STUMPS (24'' OR PLUS)	2
201.0320	CLEARING AND GRUBBING	2
201.0403	REMOVE AND DISPOSE SIDEWALKS	2
201.0409	REMOVE AND DISPOSE FLEXIBLE PAVEMENT	3
201.0415	REMOVE AND DISPOSE GUARDRAIL AND POST ALL TYPES	3
201.0454	REMOVE AND STOCKPILE ON SITE GUARD RAIL ALL TYPES INCLUDING END SECTIONS	3
201.0610	REMOVE AND DISPOSE DIRECTIONAL, WARNING, REGULATORY, SERVICE, AND STREET SIGNS	3
201.9901	REMOVE AND DISPOSE CONCRETE POST	4
201.9902	REMOVE AND DISPOSE CONCRETE TREE WELL	4
201.9903	REMOVE AND DISPOSE BOULDER	4
201.9904	REMOVE AND DELIVER GRANITE CURB	4
202.0100	**EARTH EXCAVATION**	**4**
202.0400	MUCK EXCAVATION	7
202.0700	COMMON BORROW	8
202.0800	GRAVEL BORROW	8
204.0100	TRIMMING AND FINE GRADING	9
206.0208	REMOVAL OF BALED HAY EROSION CHECKS	9
206.0230	BALED HAY EROSION CHECK AND SILT FENCE COMBINED STANDARD 9.3.0	9
207.0202	BALED HAY DITCH EROSION CHECK STANDARD 9.4.0	10
212.2000	CLEANING AND MAINTENANCE OF EROSION CONTROLS	10
301.0300	CRUSHED STONE OR CRUSHED GRAVEL BASE MODIFIED	11
302.0100	**GRAVEL BORROW SUBBASE COURSE**	**11**
401.0100	**** ITEM DELETED ****	**11**
401.0200	**** ITEM DELETED ****	**11**
401.0300	**** ITEM DELETED ****	**11**
403.0300	ASPHALT EMULSION TACK COAT	12
701.4312	12 INCH SMOOTH INTERIOR CORRUGATED POLYETHYLENE PIPE	12
701.9901	12 INCH HDPE PIPE FLARED END SECTION	12
701.9902	PRECAST CONCRETE BOX CULVERT 2' X 2' X 24'	13
702.9901	FURNISH AND INSTALL 24" DIAMETER PVC DRAIN BASIN W/15" HINGED STANDARD GRATE	13
709.0200	CONCRETE HEADWALLS FOR PIPE CULVERTS STANDARD 2.1.0	13
711.0300	SEEDED DITCH STANDARD 8.1.0	13
808.9901	POURED IN PLACE CONCRETE STEPS WITH HANDRAILS	14
901.0901	REMOVE AND RESET GUARDRAIL ALL TYPES	14
901.9901	FURNISH AND INSTALL WOOD POST - 12" SQ PRESSURE TREATED	14
901.9902	REMOVE AND DISPOSE WOOD POST	14
902.0100	STEEL BACKED TIMBER GUARDRAIL STANDARD 34.4.0	14
902.0200	STEEL BACKED TIMBER GUARDRAIL TERMINAL SECTION TYPE 1 STANDARD 34.4.1	15
902.9901	**CEDAR POST RAIL FENCE**	**15**
902.9902	VEHICLE BARRIER RAIL	15
902.9903	FURNISH AND INSTALL CEDAR FENCE, 42" TO TOP OF BOARD (3 BOARD WITH SQUARE POSTS)	15
902.9904	**FURNISH AND INSTALL FENCE 42" TO TOP OF RAIL (3 RAIL WITH ROUND POSTS)**	**16**
905.0110	PORTLAND CEMENT SIDEWALK MONOLITHIC STANDARD 43.1.0	16
905.0115	PORTLAND CEMENT CONCRETE DRIVEWAY STANDARD 43.5.0	16
906.0118	6' GRANITE TRANSITION CURB, QUARRY SPLIT SPECIAL TRANSITION STANDARD 7.3.2	16
907.0100	WATER FOR DUST CONTROL	17

Table of Contents - Distribution of Quantities

Project Name - Ten Mile River - Segment 7A
Estimate Name - Addendum No. 2
R.I. Contract No. - 2011-CH-084
FAP Nos: HPP-0367(002)

ItemCode	Description	Page
910.9901	FURNISH AND INSTALL WOVEN GEOTEXTILE FABRIC	17
911.9902	FURNISH AND INSTALL SEGMENTAL BLOCK RETAINING WALL SYSTEM	17
914.5010	FLAGPERSONS	18
914.5020	FLAGPERSONS - OVERTIME	18
919.0101	TEST PITS	18
920.0050	PLACED STONE RIPRAP R-1, R-2 STANDARD 8.3.0	18
920.0055	PLACED STONE RIPRAP R-3, R-4, R-5 STANDARD 8.3.0	19
920.0130	BEDDING FOR RIPRAP FS-1 STANDARD 8.3.0	19
920.0135	BEDDING FOR RIPRAP FS-2 STANDARD 8.3.0	19
922.0100	**TEMPORARY CONSTRUCTION SIGNS STANDARD 29.1.0 AND 27.1.1**	**19**
923.0105	DRUM BARRICADE STANDARD 26.2.0	19
923.0125	PLASTIC PIPE TYPE III BARRICADE STANDARD 26.3.1	20
923.0200	FLUORESCENT TRAFFIC CONES STANDARD 26.1.0	20
929.0100	FIELD OFFICES 240 SQUARE FOOT MINIMUM	20
932.0200	FULL-DEPTH SAWCUT OF BITUMINOUS PAVEMENT	20
932.0230	FULL DEPTH SAWCUT OF PORTLAND CEMENT CONCRETE SIDEWALK/DRIVEWAY	20
936.0110	MOBILIZATION	21
937.0200	MAINTENANCE AND MOVEMENT TRAFFIC PROTECTION	21
942.0100	DETECTABLE WARNING SYSTEMS STANDARD 48.1.0	21
L01.9901	LOAM BORROW 6 INCHES DEEP	21
L02.0101	GENERAL HIGHWAY SEEDING (TYPE 1)	22
L02.0106	WILDFLOWER SEED MIX (TYPE 6)	22
L02.9901	WILDFLOWER SEED MIX (WFM)	22
L05.0502	ADHESIVE MULCH STABILIZER	22
L05.0506	JUTE MESH	23
L06.9901	AMELANCHIER CANADENSIS (SHADBLOW JUNEBERRY) 3/4' B&B	23
L06.9902	ACER RUBRUM (RED SWAMP MAPLE) 2.5/3" CAL.	23
L06.9903	CLETHRA ALNIFOLIA (SUMMERSWEET) 2.5/3' B&B	24
L06.9904	CORNUS AMOMUM (SILKY DOGWOOD) 2/3' (2GAL)	24
L06.9905	HAMAMELIS VIRGINIANA (WITCH HAZEL) 2/3' B&B	24
L06.9906	ILEX GLABRA (INKBERRY) 24/30" B&B	25
L06.9907	ILEX OPACA FEMALE (FEMALE AMERICAN HOLLY) 5/6' B&B	25
L06.9908	ILEX OPACA FEMALE (FEMALE AMERICAN HOLLY) 8/9' B&B	25
L06.9909	ILEX OPACA MALE (MALE AMERICAN HOLLY) 1 GAL. CONT.	25
L06.9910	ILEX VIRTICILLATA FEMALE (WINTERBERRY) 3/4' B&B	25
L06.9911	ILEX VERTICILLATA MALE (MALE WINTERBERRY) 3/4' B&B	26
L06.9912	JUNIPERUS VIRGINIANA (EASTERN RED CEDAR) 5/6' B&B	26
L06.9913	MYRICA PENSYLVANICA (BAYBERRY) 2.5/3' B&B	26
L06.9914	MYRICA PENSYLVANICA (BAYBERRY) 24/30" B&B	26
L06.9915	PINUS STROBUS (WHITE PINE) 7/8' B&B	27
L06.9916	QUERCUS ALBA (WHITE OAK) 2.5/3" CAL.	27
L06.9917	QUERCUS COCCINEA (SCARLET OAK) 2.5/3" CAL.	27
L06.9918	QUERCUS RUBRA (RED OAK) 2.5/3" CAL.	27
L06.9919	THUJA OCCIDENTALIS NORTHERN WHITE CEDER (TO) 7/8'	27
L06.9920	THUJA OCCIDENTALIS NORTHERN WHITE CEDAR (TOS) 10/12'	28
L06.9921	VACCINIUM ANGUSTIFOLIUM (LOWBUSH BLUEBERRY) 15/18" B&B	28
L06.9922	VACCINIUM CORYMBOSUM (HIGHBUSH BLUEBERRY) 3/4' B&B	28
L06.9923	VIBURNUM TRILOBUM (AMERICAN CRANBERRY BUSH) 3/4' B&B	28
L06.9924	VIBURNUM CASSINOIDES (WITHEROD VIBURNUM) 3/4' B&B	29
L06.9925	WATERING PROJECT WIDE	29
L10.0101	MECHANICAL TREE AND SHRUB ROOT PRUNING	29
L11.0102	TREE PLANT PROTECTION DEVICE STANDARD 51.1.0	29
L11.9901	FURNISH AND INSTALL TREE PROTECTION RAILING	35
L15.9901	6' RECYCLED PLASTIC LUMBER BENCH	36
L15.9902	FURNISH AND INSTALL HINGED BOLLARD	36

Table of Contents - Distribution of Quantities

Project Name - Ten Mile River - Segment 7A
Estimate Name - Addendum No. 2
R.I. Contract No. - 2011-CH-084
FAP Nos: HPP-0367(002)

ItemCode	Description	Page
L15.9903	REMOVE AND SALVAGE METAL GATE	36
L15.9904	FURNISH AND INSTALL CONCRETE FILLED 6" DIA. X 7'-0" LENGTH STEEL POST WITH CAP AND FOUNDATION PAINTED YELLOW WITH 3" REFLECTORIZED TAPE	36
L15.9905	ROOT BARRIER TREATMENT FOR EXISTING TREES	36
T11.9901	FURNISH AND INSTALL EARLY WARNING SYSTEM	37
T15.0100	DIRECTIONAL REGULATORY AND WARNING SIGNS	37
T15.0200	REMOVE AND RELOCATE DIRECTIONAL REGULATORY AND WARNING SIGN	38
T15.9901	BIKEWAY ENTRANCE SIGN	38
T15.9902	TRAIL HEAD SIGN	38
T15.9903	TRAIL INFORMATION SIGN	38
T15.9904	D.A. TOMLINSON SPORTS COMPLEX	39
T15.9905	SLATER MEMORIAL PARK	39
T15.9906	PARKSIDE AVENUE	39
T15.9907	TEN MILE RIVER GREENWAY SIGN	39
T19.9901	MILE POST MARKER 4" X 4" X 72"	39
T20.2004	4 INCH EPOXY RESIN PAVEMENT MARKINGS WHITE	39
T20.2006	6 INCH EPOXY RESIN PAVEMENT MARKINGS WHITE	40
T20.2012	12 INCH EPOXY RESIN PAVEMENT MARKINGS WHITE	40
T20.2014	4 INCH EPOXY RESIN PAVEMENT MARKINGS YELLOW	40
T20.2016	6 INCH EPOXY RESIN PAVEMENT MARKINGS YELLOW	41
T20.2018	8 INCH EPOXY RESIN PAVEMENT MARKINGS YELLOW	41
T20.9901	WORD OR SYMBOL EPOXY RESIN PAVEMENT MARKING - WHITE	41
T20.9902	24 INCH EPOXY RESIN CROSSWALK MARKINGS WHITE	41
202.0201	**ROCK EXCAVATION MECHANICAL**	**42**
211.0100	**CONSTRUCTION ACCESSES STANDARD 9.9.0**	**42**
401.9901	**BITUMINOUS BASE COURSE, SUPERPAVE MIX - 19 MM**	**42**
401.9902	**BITUMINOUS SURFACE COURSE, SUPERPAVE MIX - 4.75 MM**	**42**
601.0300	**CLASS A PORTLAND CEMENT CONCRETE**	**43**
902.9905	**FURNISH AND INSTALL CEDAR FENCE WITH WIRE MESH (SQUARE POST)**	**43**
931.0110	**CLEANING AND SWEEPING PAVEMENT**	**43**
L02.0103	**TEMPORARY SEEDING (TYPE 3)**	**43**
L05.9901	**PERMANENT EROSION CONTROL BLANKET**	**43**

Distribution of Quantities

Project Name - Ten Mile River - Segment 7A
Estimate Name - Addendum No. 2
R.I. Contract No. - 2011-CH-084
FAP Nos: HPP-0367(002)

Item No.	Item Code	Description	UM	Qty.	Pay Code	Seq. No.
001	201.0301	**CUTTING AND DISPOSING ISOLATED**	**EACH**			
		TREES AND STUMPS (4"- 24")				
		ACCESS PATH				
		STA 101+12 LT		1.00	0028	01
		STA 102+93 LT		1.00	0028	01
		STA 103+16 LT		1.00	0028	01
		BIKEWAY				
		STA 705+32 RT		1.00	0028	01
		STA 705+73 RT		1.00	0028	01
		STA 706+59 RT		1.00	0028	01
		STA 709+93 LT		1.00	0028	01
		STA 711+59 RT		1.00	0028	01
		STA 711+91 RT		1.00	0028	01
		STA 712+38 RT		1.00	0028	01
		STA 712+87 RT		1.00	0028	01
		STA 713+10 RT		1.00	0028	01
		STA 713+72 RT		1.00	0028	01
		STA 714+00 LT		1.00	0028	01
		STA 714+23 RT		2.00	0028	01
		STA 714+90 RT		1.00	0028	01
		STA 714+92 RT		1.00	0028	01
		STA 715+15 RT		1.00	0028	01
		STA 721+35 RT		1.00	0028	01
		STA 725+33 LT		1.00	0028	01
		STA 725+82 RT		2.00	0028	01
		STA 726+46 RT		1.00	0028	01
		STA 726+63 RT		1.00	0028	01
		STA 727+04 RT		1.00	0028	01
		STA 735+02 LT		1.00	0028	01
		STA 736+23 RT		1.00	0028	01
		STA 737+87 LT		1.00	0028	01
		STA 737+92 CL		1.00	0028	01
		STA 740+80 LT		1.00	0028	01

Distribution of Quantities

Project Name - Ten Mile River - Segment 7A
Estimate Name - Addendum No. 2
R.I. Contract No. - 2011-CH-084
FAP Nos: HPP-0367(002)

Item No.	Item Code	Description	UM	Qty.	Pay Code	Seq. No.
001	201.0301 Cont.	STA 741+00 RT		1.00	0028	01
		STA 741+38 RT		1.00	0028	01
		STA 741+55 RT		1.00	0028	01
		STA 741+99 LT		1.00	0028	01
		STA 742+64 LT		3.00	0028	01
		STA 743+39 LT		3.00	0028	01
		STA 743+39 RT		2.00	0028	01
		STA 743+53 RT		1.00	0028	01
		STA 743+60 LT		1.00	0028	01
		Item 201.0301 Total:		**45.00**		
002	201.0302	**CUTTING AND DISPOSING ISOLATED TREES AND STUMPS (24'' OR PLUS)**	**EACH**			
		BIKEWAY				
		STA 712+29 RT		1.00	0028	01
		STA 713+00 RT		1.00	0028	01
		STA 713+18 LT		1.00	0028	01
		STA 714+55 RT		1.00	0028	01
		STA 714+74 RT		1.00	0028	01
		STA 720+90		1.00	0028	01
		STA 721+48 RT		1.00	0028	01
		STA 722+28 RT		1.00	0028	01
		STA 723+79 RT		1.00	0028	01
		Item 201.0302 Total:		**9.00**		
003	201.0320	**CLEARING AND GRUBBING**	**ACRE**			
		BIKEWAY				
		FROM ACAD		3.00	0028	01
		Item 201.0320 Total:		**3.00**		
004	201.0403	**REMOVE AND DISPOSE SIDEWALKS**	**SY**			
		ARMISTICE BLVD				
		NORTH		38.00	0028	01

Distribution of Quantities

Project Name - Ten Mile River - Segment 7A
Estimate Name - Addendum No. 2
R.I. Contract No. - 2011-CH-084
FAP Nos: HPP-0367(002)

Item No.	Item Code	Description	UM	Qty.	Pay Code	Seq. No.
013	202.0100 Cont.	STA 730+50 TO 731+00		27.00	0028	01
		STA 731+00 TO 731+50		25.00	0028	01
		STA 731+50 TO 732+00		17.00	0028	01
		STA 732+00 TO 732+50		10.00	0028	01
		STA 732+50 TO 733+00		15.00	0028	01
		STA 733+00 TO 733+50		20.00	0028	01
		STA 733+50 TO 734+00		6.00	0028	01
		STA 736+00 TO 736+50		2.00	0028	01
		STA 736+50 TO 737+00		7.00	0028	01
		STA 737+00 TO 737+50		11.00	0028	01
		STA 737+50 TO 738+00		10.00	0028	01
		STA 738+00 TO 738+50		4.00	0028	01
		STA 738+50 TO 739+00		1.00	0028	01
		STA 739+00 TO 739+50		1.00	0028	01
		STA 739+50 TO 740+00		4.00	0028	01
		STA 740+00 TO 740+50		16.00	0028	01
		STA 740+50 TO 741+00		27.00	0028	01
		STA 741+00 TO 741+50		47.00	0028	01
		STA 741+50 TO 742+00		38.00	0028	01
		STA 742+00 TO 742+50		4.00	0028	01
		STA 743+50 TO 743+62.41		5.00	0028	01
		[illegible]				
		[illegible]		[illegible]	[illegible]	
		[illegible]		[illegible]	[illegible]	
		[illegible]		[illegible]	[illegible]	
		[illegible]		[illegible]	[illegible]	
		[illegible]		[illegible]	[illegible]	
		[illegible]		[illegible]	[illegible]	
		[illegible]		[illegible]	[illegible]	
		Item 202.0100 Total:		**3,125.00**		
014	202.0400	**MUCK EXCAVATION**	**CY**			
		ACCESS PATH				
		STA 103+00 TO 103+15.5		75.00	0028	01

Distribution of Quantities

Project Name - Ten Mile River - Segment 7A
Estimate Name - Addendum No. 2
R.I. Contract No. - 2011-CH-084
FAP Nos: HPP-0367(002)

Item No.	Item Code	Description	UM	Qty.	Pay Code	Seq. No.
022	301.0300	**CRUSHED STONE OR CRUSHED GRAVEL**	**CY**			
		BASE MODIFIED				
		BIKEWAY				
		STA. 600+25 TO STA. 702+50		42.00	0028	01
		Item 301.0300 Total:		**42.00**		
023	302.0100	**GRAVEL BORROW SUBBASE COURSE**	**CY**			
		ACCESS PATH				
		FROM ITEM CODE 401.0300		50.00	0028	01
		BIKEWAY				
		FROM CODE 401.0300		1,727.00	0028	01
		PARKING AREA				
		FROM CODE 401.0200		52.00	0028	01
		Item 302.0100 Total:		**1,829.00**		
024	401.0100	BITUMINOUS BASE COURSE	TON			
		PARKING AREA				
		FROM CODE 401.0200		[illegible]	[illegible]	[illegible]
		Item 401.0100 Total:		**DELETED**		
025	401.0200	BITUMINOUS SURFACE COURSE TYPE I-1	TON			
		[illegible]				
		FROM [illegible]		[illegible]	[illegible]	[illegible]
		[illegible]				
		FROM [illegible]		[illegible]	[illegible]	[illegible]
		[illegible]				
		[illegible]		[illegible]	[illegible]	[illegible]
		Item 401.0200 Total:		**DELETED**		
026	401.0300	BITUMINOUS SURFACE COURSE TYPE I-2	TON			
		[illegible]				
		[illegible]		[illegible]	[illegible]	[illegible]
		[illegible]				

Distribution of Quantities

Project Name - Ten Mile River - Segment 7A
Estimate Name - Addendum No. 2
R.I. Contract No. - 2011-CH-084
FAP Nos: HPP-0367(002)

Item No.	Item Code	Description	UM	Qty.	Pay Code	Seq. No.
026	401.0300 Cont.	[illegible]	[illegible]	[illegible]	[illegible]	[illegible]
		[illegible]	[illegible]	[illegible]	[illegible]	[illegible]

Distribution of Quantities

Project Name - Ten Mile River - Segment 7A
Estimate Name - Addendum No. 2
R.I. Contract No. - 2011-CH-084
FAP Nos: HPP-0367(002)

Item No.	Item Code	Description	UM	Qty.	Pay Code	Seq. No.
026	401.0300 Cont.	Item 401.0300 Total:		**DELETED**		
027	**403.0300**	**ASPHALT EMULSION TACK COAT**	**SY**			
		BIKEWAY				
		ACCESS PATH		297.00	0028	01
		PARKING AREA		156.00	0028	01
		PAVEMENT AREA		4,884.00	0028	01
		Item 403.0300 Total:		**5,337.00**		
028	**701.4312**	**12 INCH SMOOTH INTERIOR CORRUGATED POLYETHYLENE PIPE**	**LF**			
		ACCESS PATH				
		STA 103+15		20.00	0028	01
		BIKEWAY				
		STA 707+64 RT TO 707+75 RT		8.00	0028	01
		STA 707+77 LT & RT		28.00	0028	01
		STA 715+15 RT TO 715+22 LT		24.00	0028	01
		STA 718+30 LT & RT		36.00	0028	01
		STA 728+26 LT TO 728+32 RT		20.00	0028	01
		STA 741+65 RT TO 741+73 RT		6.00	0028	01
		STA 741+73 LT & RT		21.00	0028	01
		STA 741+75 RT TO 741+81 RT		6.00	0028	01
		Item 701.4312 Total:		**169.00**		
029	**701.9901**	**12 INCH HDPE PIPE FLARED END SECTION**	**EACH**			
		BIKEWAY				
		ACCESS PATH STA 103+15 LT & RT		2.00	0028	01
		STA 707+67 RT		1.00	0028	01
		STA 707+77 LT		1.00	0028	01
		STA 715+15 RT		1.00	0028	01
		STA 715+22 LT		1.00	0028	01

Distribution of Quantities

Project Name - Ten Mile River - Segment 7A
Estimate Name - Addendum No. 2
R.I. Contract No. - 2011-CH-084
FAP Nos: HPP-0367(002)

Item No.	Item Code	Description	UM	Qty.	Pay Code	Seq. No.
S038	902.0100 Cont.	STA 100+03 RT		10.00	0028	01
		BIKEWAY				
		STA 743+48 LT TO 743+55 LT		18.00	0028	01
		STA 743+48 RT TO 743+55 RT		40.00	0028	01
		Item 902.0100 Total:		**89.00**		
S039	902.0200	**STEEL BACKED TIMBER GUARDRAIL TERMINAL SECTION TYPE 1 STANDARD 34.4.1**	**EACH**			
		BIKEWAY				
		STA 743+63 RT		1.00	0028	01
		Item 902.0200 Total:		**1.00**		
040	902.9901	**CEDAR POST RAIL FENCE**	**LF**			
		BIKEWAY				
		STA 704+76 TO 707+50 LT		274.00	0028	01
		STA 711+25 TO 715+68 LT		443.00	0028	01
		STA 718+65 TO 722+50 LT		385.00	0028	01
		STA 723+31 TO 724+60 LT		129.00	0028	01
		STA 726+05 TO 727+87 LT		182.00	0028	01
		STA 728+07 TO 728+47 LT		40.00	0028	01
		STA 733+91 TO 734+44 LT		53.00	0028	01
		STA 733+96 TO 734+37 RT		41.00	0028	01
		STA. 740+65 TO 743+45 LT		285.00	0028	01
		STA. 742+10 TO 743+48 RT		135.00	0028	01
		Item 902.9901 Total:		**1,967.00**		
041	902.9902	**VEHICLE BARRIER RAIL**	**LF**			
		BIKEWAY				
		STA 600+00 TO 600+22 LT		37.00	0028	01
		STA 600+22 RT		48.00	0028	01
		Item 902.9902 Total:		**85.00**		

Distribution of Quantities

Project Name - Ten Mile River - Segment 7A
Estimate Name - Addendum No. 2
R.I. Contract No. - 2011-CH-084
FAP Nos: HPP-0367(002)

Item No.	Item Code	Description	UM	Qty.	Pay Code	Seq. No.
042	902.9903	FURNISH AND INSTALL CEDAR FENCE, 42" TO TOP OF BOARD (3 BOARD WITH	LF			

Distribution of Quantities

Project Name - Ten Mile River - Segment 7A
Estimate Name - Addendum No. 2
R.I. Contract No. - 2011-CH-084
FAP Nos: HPP-0367(002)

Item No.	Item Code	Description	UM	Qty.	Pay Code	Seq. No.
042	902.9903 Cont.	**SQUARE POSTS)**				
		BIKEWAY				
		STA 729+54 TO 731+23 LT		169.00	0028	01
		Item 902.9903 Total:		**169.00**		
043	902.9904	**FURNISH AND INSTALL FENCE 42" TO TOP OF RAIL (3 RAIL WITH ROUND POSTS)**	LF			
		ACCESS PATH				
		STA 100+15 TO 100+70 RT		64.00	0028	01
		STA 101+00 TO 101+60 LT		64.00	0028	01
		Item 902.9904 Total:		**128.00**		
044	905.0110	**PORTLAND CEMENT SIDEWALK MONOLITHIC STANDARD 43.1.0**	CY			
		ARMISTICE BLVD				
		NORTH		3.00	0028	01
		SOUTH		1.00	0028	01
		Item 905.0110 Total:		**4.00**		
045	905.0115	**PORTLAND CEMENT CONCRETE DRIVEWAY STANDARD 43.5.0**	CY			
		ARMISTICE BLVD				
		NORTH		5.00	0028	01
		SOUTH		6.00	0028	01
		BIKEWAY				
		STA 743+65		6.00	0028	01
		Item 905.0115 Total:		**17.00**		
046	906.0118	**6' GRANITE TRANSITION CURB, QUARRY SPLIT SPECIAL TRANSITION STANDARD 7.3.2**	EACH			
		BIKEWAY				

Distribution of Quantities

Project Name - Ten Mile River - Segment 7A
Estimate Name - Addendum No. 2
R.I. Contract No. - 2011-CH-084
FAP Nos: HPP-0367(002)

Item No.	Item Code	Description	UM	Qty.	Pay Code	Seq. No.
054	920.0055	**PLACED STONE RIPRAP R-3, R-4, R-5 STANDARD 8.3.0**	**SY**			
		BIKEWAY				
		STA 707+78 LT		5.00	0028	01
		STA 715+22 LT		5.00	0028	01
		STA 717+31 LT		5.00	0028	01
		STA 734+18 LT		5.00	0028	01
		STA 734+18 RT		5.00	0028	01
		STA 741+73 LT		5.00	0028	01
		Item 920.0055 Total:		**30.00**		
055	920.0130	**BEDDING FOR RIPRAP FS-1 STANDARD 8.3.0**	**SY**			
		BIKEWAY AND ACCESS PATH				
		FROM CODE 920.0050		58.00	0028	01
		Item 920.0130 Total:		**58.00**		
056	920.0135	**BEDDING FOR RIPRAP FS-2 STANDARD 8.3.0**	**SY**			
		BIKEWAY				
		FROM CODE 920.0055		30.00	0028	01
		Item 920.0135 Total:		**30.00**		
057	922.0100	**TEMPORARY CONSTRUCTION SIGNS STANDARD 29.1.0 AND 27.1.1**	**SF**			
		BIKEWAY				
		MAINTENANCE & PROTECTION OF TRAFFIC		360.00	0028	01
		Item 922.0100 Total:		**360.00**		
058	923.0105	**DRUM BARRICADE STANDARD 26.2.0**	**BDAY**			
		BIKEWAY				
		MANTENANCE & PROTECTION OF		5,096.00	0028	01

Distribution of Quantities

Project Name - Ten Mile River - Segment 7A
Estimate Name - Addendum No. 2
R.I. Contract No. - 2011-CH-084
FAP Nos: HPP-0367(002)

Item No.	Item Code	Description	UM	Qty.	Pay Code	Seq. No.
S124	T20.9902 Cont.	ARMISTICE BLVD				
		CROSSWALK		90.00	0028	01
		Item T20.9902 Total:		**90.00**		
125	202.0201	**ROCK EXCAVATION MECHANICAL**	**CY**			
		BIKEWAY				
		PROJECT WIDE		100.00	0028	01
		Item 202.0201 Total:		**100.00**		
126	211.0100	**CONSTRUCTION ACCESSES STANDARD 9.9.0**	**SY**			
		BIKEWAY				
		ARMISTICE BLVD		67.00	0028	01
		PARKING LOT		67.00	0028	01
		Item 211.0100 Total:		**134.00**		
127	401.9901	**BITUMINOUS BASE COURSE, SUPERPAVE MIX - 19 MM**	**TON**			
		ACCESS PATH				
		STA. 100+00 TO 103+34.21		56.00	0028	01
		BIKEWAY				
		STA. 600+00 TO 602+03.26		43.00	0028	01
		STA. 702+00 TO 743+91.98		871.00	0028	01
		PARKING AREA				
		PARKING LOT		30.00	0028	01
		Item 401.9901 Total:		**1,000.00**		
128	401.9902	**BITUMINOUS SURFACE COURSE, SUPERPAVE MIX - 4.75 MM**	**TON**			
		ACCESS PATH				
		FROM ITEM CODE 401.9901		21.00	0028	01
		BIKEWAY				
		FROM ITEM CODE 401.9901		351.00	0028	01

Distribution of Quantities

Project Name - Ten Mile River - Segment 7A
Estimate Name - Addendum No. 2
R.I. Contract No. - 2011-CH-084
FAP Nos: HPP-0367(002)

Item No.	Item Code	Description	UM	Qty.	Pay Code	Seq. No.
128	401.9902 Cont.	PARKING AREA				
		FROM ITEM CODE 401.9901		11.00	0028	01
		Item 401.9902 Total:		**383.00**		
129	601.0300	**CLASS A PORTLAND CEMENT CONCRETE**	**CY**			
		ARMISTICE BLVD				
		CURB LOCK		1.00	0028	01
		Item 601.0300 Total:		**1.00**		
130	902.9905	**FURNISH AND INSTALL CEDAR FENCE WITH WIRE MESH (SQUARE POST)**	**LF**			
		ACCESS PATH				
		STA. 101+00		65.00	0028	01
		Item 902.9905 Total:		**65.00**		
131	931.0110	**CLEANING AND SWEEPING PAVEMENT**	**HSY**			
		ARMISTICE BLVD				
		ROADWAY		686.00	0028	01
		BIKEWAY				
		PARKING LOT		70.00	0028	01
		Item 931.0110 Total:		**756.00**		
S132	L02.0103	**TEMPORARY SEEDING (TYPE 3)**	**SY**			
		BIKEWAY				
		FROM ITEM CODE L02.0103		6,653.00	0028	01
		Item L02.0103 Total:		**6,653.00**		
S133	L05.9901	**PERMANENT EROSION CONTROL BLANKET**	**SY**			
		BIKEWAY				
		FROM ITEM CODE 711.0300		195.00	0028	01
		Item L05.9901 Total:		**195.00**		

FED. ROAD DIV. NO.	STATE	FEDERAL AID PROJECT NO.	FISCAL YEAR	SHEET NO.	TOTAL SHEETS
1	RI			42	45

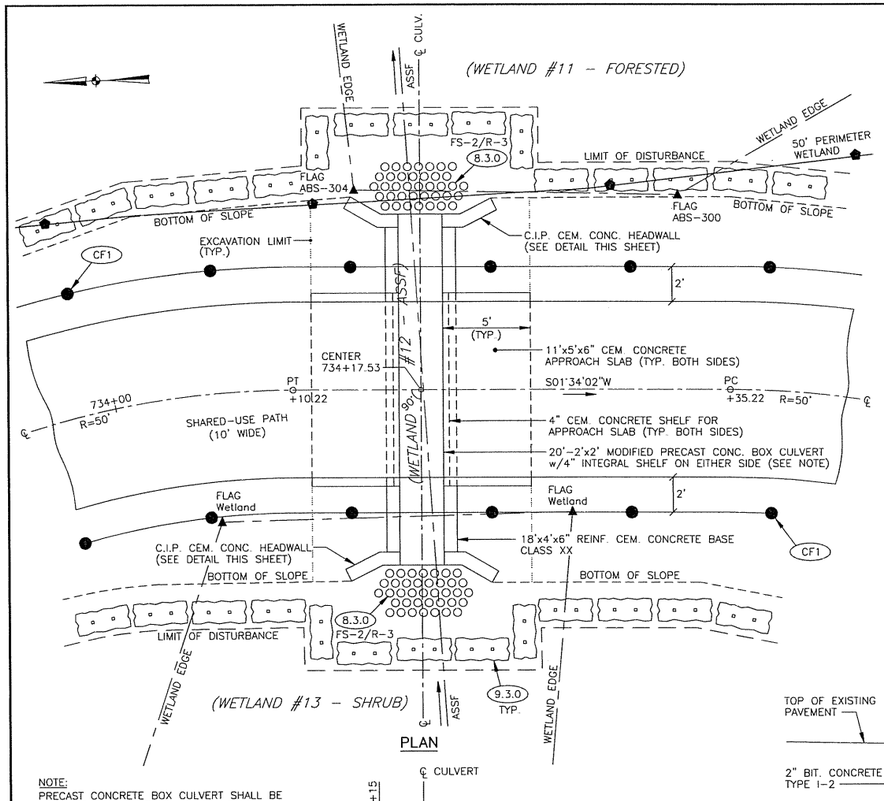

PLAN

NOTE:
PRECAST CONCRETE BOX CULVERT SHALL BE DESIGNED TO WITHSTAND HS-20 LOADING.

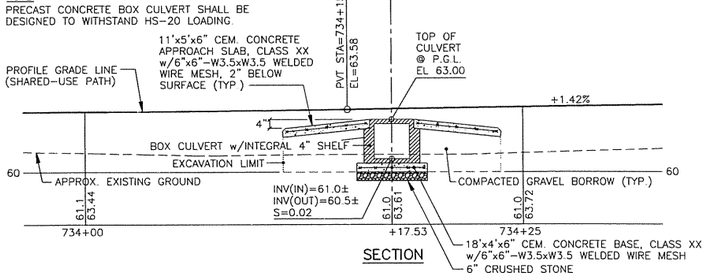

SECTION

PROPOSED 2'x2' BOX CULVERT @ PGL
(STA. 734+17.53)
SCALE: 1/4"=1'-0"

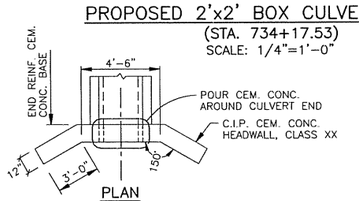

PLAN

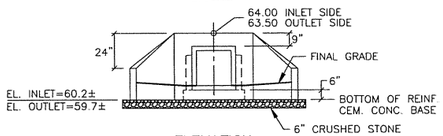

ELEVATION

HEADWALL DETAIL
NOT TO SCALE

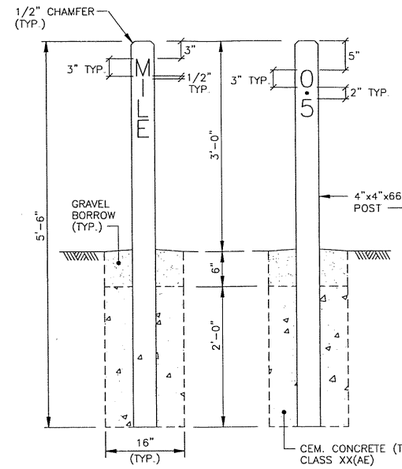

SECTION D–D

SECTION E–E

NOTE:
WOOD POST SHALL BE #2 SOUTHERN YELLOW PINE, ACQ PRESSURE TREATED 0.4 LBS/CF.

3" TEXT ROUTERED INTO WOOD POST ON 3 SIDES –PAINT TEXT WHITE. (FOR LOCATION AND TEXT, SEE "SIGNING & STRIPING PLAN NO. 7")

PLAN

MILEPOST DETAIL
SCALE: 1"=1'-0"

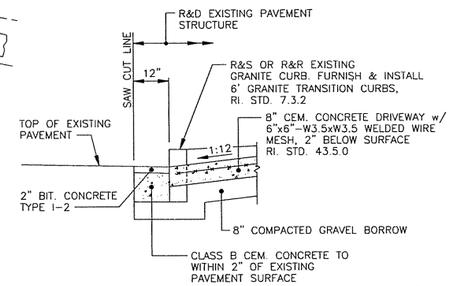

ENTRANCE RAMP DETAIL
(AT ARMISTICE BLVD.)
SCALE: 1/2"=1'-0"

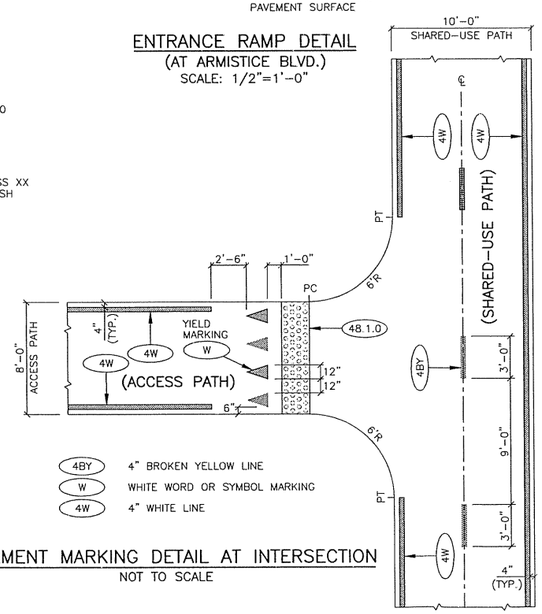

4BY 4" BROKEN YELLOW LINE
W WHITE WORD OR SYMBOL MARKING
4W 4" WHITE LINE

PAVEMENT MARKING DETAIL AT INTERSECTION
NOT TO SCALE

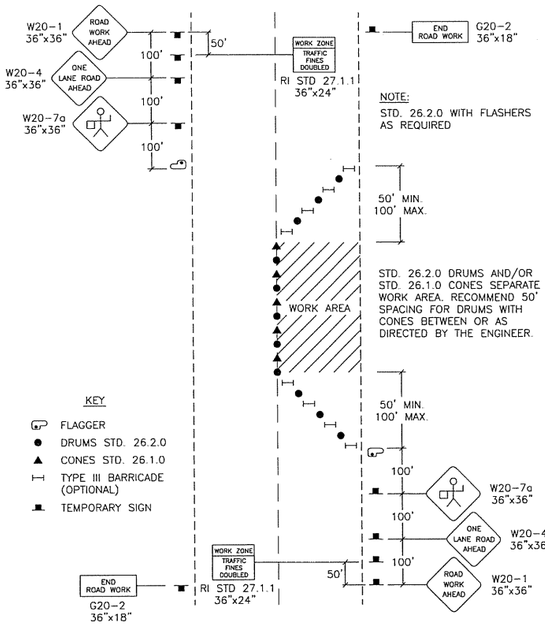

NOTE:
STD. 26.2.0 WITH FLASHERS AS REQUIRED

NOTE: SEE "STANDARD NOTES-2" AND "JOB SPECIFIC PLAN SYMBOLS, LEGEND & NOTES" DRAWINGS FOR ADDITIONAL TRAFFIC MANAGEMENT NOTES.

TRAFFIC CONTROL PLAN
(LANE CLOSURE ON TWO LANE ROAD w/ FLAGGERS)
NOT TO SCALE

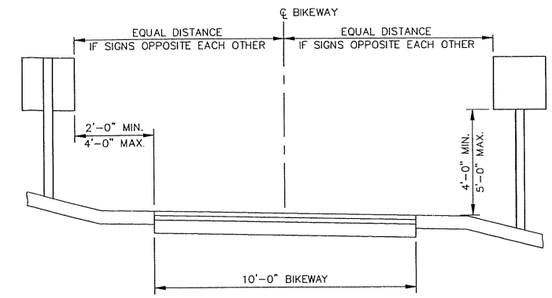

NOTE:
SEE SIGNING & STRIPING PLANS FOR SIGN LEGEND, SIZE AND LOCATIONS.

SIGN PLACEMENT DETAIL
SCALE: 3/8" = 1'-0"

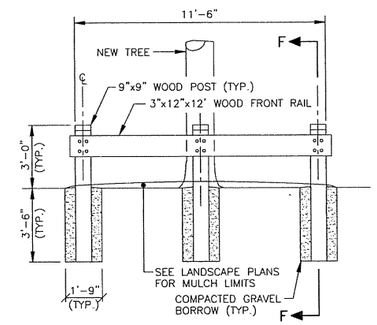

ELEVATION

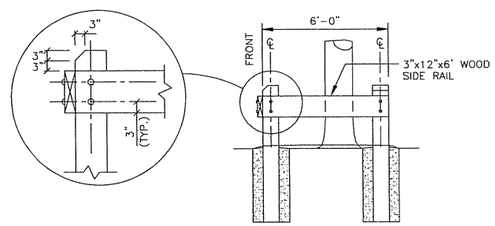

SECTION F–F

NOTES:
1. ALL WOOD SHALL BE #2 SOUTHERN YELLOW PINE A.C.Q. PRESSURE TREATED 0.4 LBS/CF.
2. EXPOSED WOOD SHALL BE STAINED BLACK.
3. FRONT RAIL: ATTACH w/4-1/2"x6" GALV. LAG SCREWS w/WASHERS PER POST. SIDE RAILS: ATTACH w/2-1/2"x6" GALV. LAG SCREWS w/WASHERS PER POST.

PROPOSED TREE PROTECTION RAIL
NOT TO SCALE

REVISIONS		
NO.	DATE	BY

RHODE ISLAND
DEPARTMENT OF TRANSPORTATION

TEN MILE RIVER BIKEWAY
SEGMENT 7A

PAWTUCKET, RHODE ISLAND

DETAIL SHEET NO. 3

CHECKED BY PEI DATE DEC 2011 SCALE AS SHOWN

Prime Engineering, Inc.
142 Putnam Avenue, Johnston, RI 02919
Tel: 401.233.2993 Fax 401.233.2994

0106B_V1_042_DETAIL003

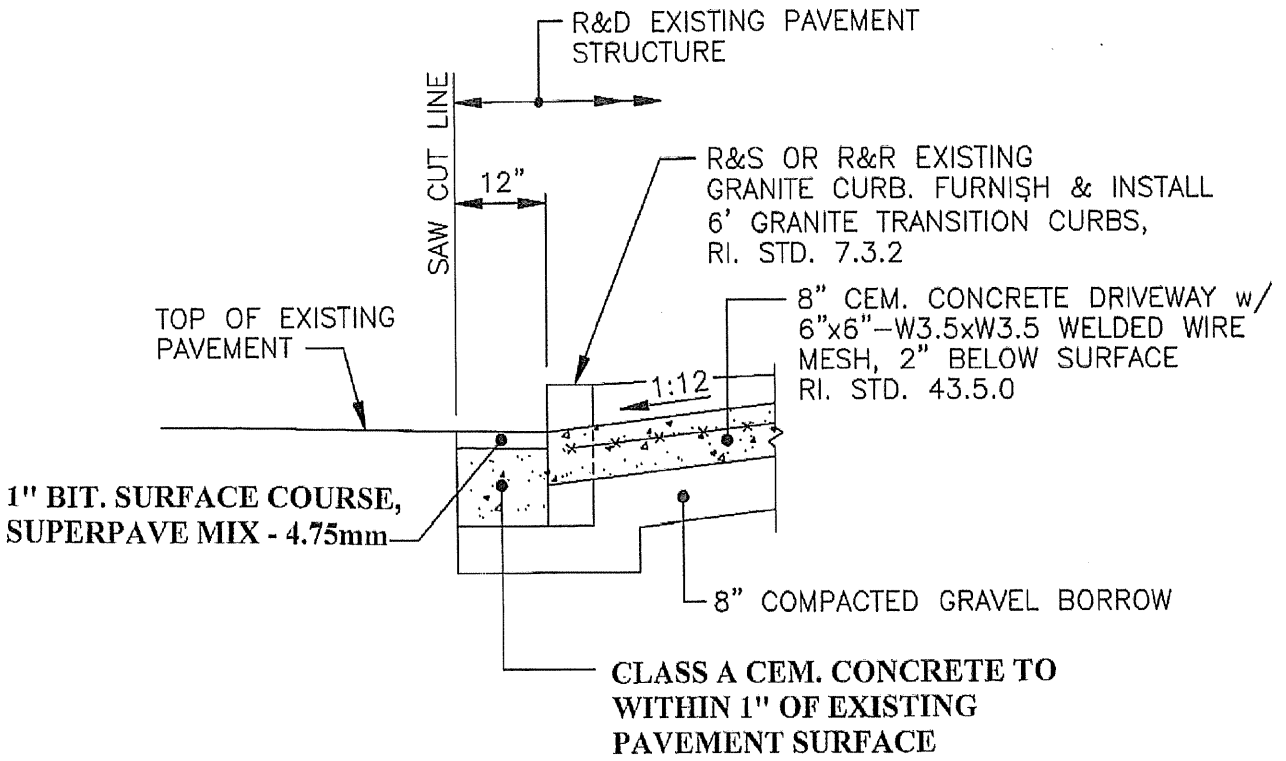

ENTRANCE RAMP DETAIL
(AT ARMISTICE BLVD.)
SCALE: 1/2"=1'-0"

REVISIONS		
NO.	DATE	BY

RHODE ISLAND
DEPARTMENT OF TRANSPORTATION

TEN MILE RIVER BIKEWAY
SEGMENT 7A

PAWTUCKET, RHODE ISLAND

DETAIL SHEET NO. 3

Pei
142 Putnam Avenue, Johnston, RI 02919
Tel: 401.233.2993 Fax: 401.233.2994
Prime Engineering, Inc.

CHECKED BY PEI DATE DEC 2011 SCALE AS SHOWN

NOTES:

1. INSTALLATION TO BE COMPLETED IN ACCORDANCE WITH MANUFACTURER'S SPECIFICATIONS.
2. DO NOT SCALE DRAWINGS.
3. **ANCHOR BOLTS NO MORE THAN 12-1/2 BCD TO ALLOW ROOM FOR WASHERS AND NUTS.**
4. CROSS ALERT COMPONENT SIZES ARE APPROXIMATE. (SEE CROSS ALERT FOR ACTUAL SIZES)
5. PIER FOUNDATION DESIGN IS BASED ON ASCE 7-98. WIND LOAD ON GROSS AREA OF 20 SF APPLIED 10' ABOVE TOP OF FOUNDATION WITH A 2' OFFSET. SOIL UNIT WEIGHT OF 125 PCF, 32° FRICTION ANGLE.
6. MINIMUM REQUIRED CONCRETE STRENGTH Fc=4,000 PSI.
7. MINMUM REQUIRED STEEL PROPERTIES: ALL STRUCTURAL STEEL A36 Fy=36 KSI, ALL REINFORCEMENT STEEL Fy=60 KSI ALL NUTS AND BOLTS Fy=36 KSI, ALL WELDS E70XX ELECTRODES
8. ALL REINFORMENT STEEL TO BE DEFORMED. (UNLESS SHOWN OTHERWISE)

PIER FOUNDATION

N.T.S.

REVISIONS		
NO.	DATE	BY

RHODE ISLAND
DEPARTMENT OF TRANSPORTATION

TEN MILE RIVER BIKEWAY
SEGMENT 7A

PAWTUCKET, RHODE ISLAND

DETAIL SHEET NO. 4

Pei
142 Putnam Avenue, Johnston, RI 02919
Tel: 401.233.2593 Fax 401.233.2594
Prime Engineering, Inc.

CHECKED BY PEI DATE DEC 2011 SCALE AS SHOWN

NOTES:

1. INSTALLATION TO BE COMPLETED IN ACCORDANCE WITH MANUFACTURER'S SPECIFICATIONS.
2. DO NOT SCALE DRAWINGS.
3. ANCHOR BOLTS NO MORE THAN 12-1/2 BCD TO ALLOW ROOM FOR WASHERS AND NUTS.

BREAKAWAY POLE INFORMATION

ACTB-20-695

REVISIONS		
NO.	DATE	BY

RHODE ISLAND
DEPARTMENT OF TRANSPORTATION

TEN MILE RIVER BIKEWAY
SEGMENT 7A

PAWTUCKET, RHODE ISLAND

DETAIL SHEET NO. 4

CHECKED BY PEI DATE DEC 2011 SCALE AS SHOWN

Pei
142 Putnam Avenue, Johnston, RI 02919
Tel: 401.233.2593 Fax 401.233.2594
Prime Engineering, Inc.

NOTES:

1. INSTALLATION TO BE COMPLETED IN ACCORDANCE WITH MANUFACTURER'S SPECIFICATIONS.
2. DO NOT SCALE DRAWINGS.
3. THE STOP SIGN IS AN OCTAGONAL SIGN MUTCD # R1-1
4. ALL BEACONS ARE 12VDC AND MEET ITE SPECS.

STANDARD MOTION ACTIVATED INTERSECTION POLE

BPIN

REVISIONS		
NO.	DATE	BY

RHODE ISLAND
DEPARTMENT OF TRANSPORTATION

TEN MILE RIVER BIKEWAY
SEGMENT 7A

PAWTUCKET, RHODE ISLAND

DETAIL SHEET NO. 4

CHECKED BY PEI DATE DEC 2011 SCALE AS SHOWN

Pei
142 Putnam Avenue, Johnston, RI 02919
Tel: 401.233.5993 Fax: 401.233.2594
Prime Engineering, Inc.

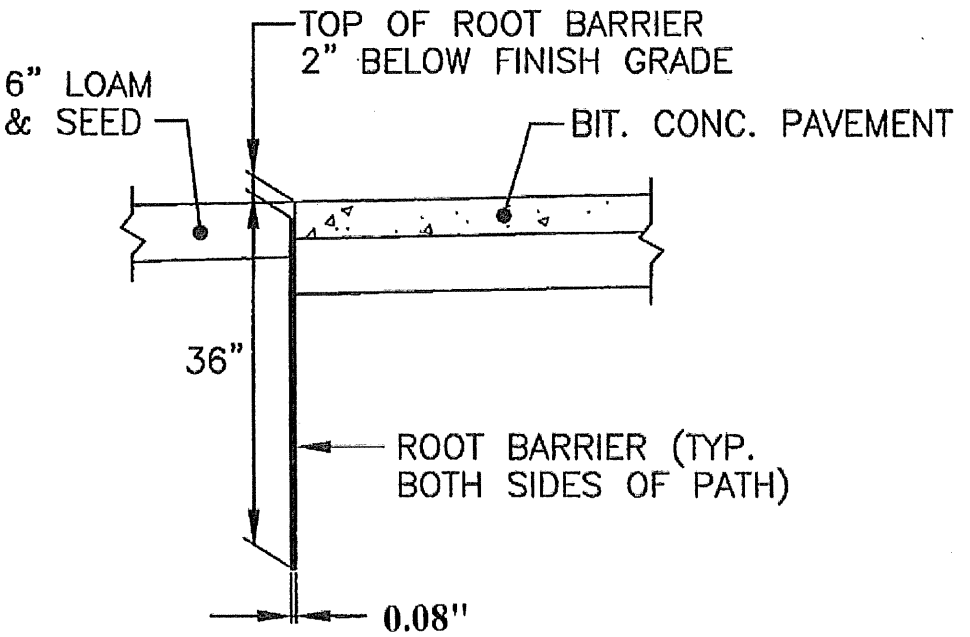

ROOT BARRIER TREATMENT ALONG EDGE OF PATH

NOT TO SCALE

REVISIONS		
NO.	DATE	BY

RHODE ISLAND
DEPARTMENT OF TRANSPORTATION

TEN MILE RIVER BIKEWAY
SEGMENT 7A

PAWTUCKET, RHODE ISLAND

DETAIL SHEET NO. 5

CHECKED BY PEI DATE DEC 2011 SCALE AS SHOWN

Pei
142 Putnam Avenue, Johnston, RI 02919
Tel: 401.233.2993 Fax 401.233.2974
Prime Engineering, Inc.