UNIVERSITY OF RHODE ISLAND

ALDRICH HALL BATHROOM RENOVATION & DOOR & SIGNAGE REPLACEMENT

KINGSTON CAMPUS
KINGSTON, RHODE ISLAND

DRAWING LIST:

ARCHITECTURAL

G0.0	TITLE SHEET
G1.101	GENERAL INFORMATION
A2.100	DOOR DEMO. & REFERENCE KEY PLANS
A2.101	DOOR DEMO. & REFERENCE KEY PLANS
A2.102	ENLARGED BATHROOM DEMOLITION FLOOR PLANS
A2.103	ENLARGED BATHROOM DEMOLITION FLOOR PLANS
A2.201	BATHROOM CONSTRUCTION FLOOR PLANS
A2.202	BATHROOM CONSTRUCTION FLOOR PLANS
A2.301	BATHROOM REFLECTED CEILING PLANS
A2.302	BATHROOM REFLECTED CEILING PLANS
A5.201	FIRST FLOOR BATHROOM INTERIOR ELEVATIONS
A5.202	UPPER FLOORS TYPICAL BATHROOM INTERIOR ELEVATIONS
A8.101	SIGN & DOOR SCHEDULE
A8.102	SIGN & DOOR SCHEDULE
A8.103	SIGNAGE & MOUNTING DETAILS

M.E.P.

P1.101	GROUND, SECOND, THIRD & FOURTH FLOOR PLANS PLUMBING DEMOLITION
P2.201	GROUND, SECOND, THIRD & FOURTH FLOOR PLANS PLUMBING
P3.101	LEGEND & SCHEDULES - PLUMBING
E2.101	GROUND LEVEL ELECTRICAL PLAN
E2.102	SECOND THRU FOURTH LEVEL ELECTRICAL PLAN

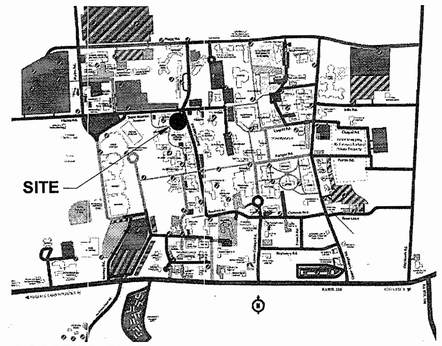

LOCATION PLAN

CREATIVE ENVIRONMENT CORP. CONSULTING ENGINEERS
50 OFFICE PARKWAY
EAST PROVIDENCE, RI 02914
TEL - 401 438 7733

TectonArchitects | inc
ONE HARTFORD SQUARE WEST
HARTFORD CONNECTICUT
TEL 860 548 0802
FAX 860 249 2531
www.tectonarchitects.com

TectonArchitects | inc
1 Hartford Sq. West, Hartford CT 06106
860 548 0802
17 Railroad Avenue, Westerly RI 02891
401 596 7555
tectonarchitects.com

Notice:
This drawing is the property of Tecton Architects | inc The use, re-use or reproduction of this drawing for any purpose whatsoever without an expressed written agreement between Tecton Architects | inc and the user is prohibited. Rights to use the information on this sheet are not transferred until payment has been received for services rendered. Any rights so granted are non-transferable to other parties without the prior expressed written consent of Tecton Architects | inc
© 2012 Tecton Architects | inc

Consultant

Owner
THE UNIVERSITY OF RHODE ISLAND
THINK BIG WE DO

Project
University of Rhode Island
ALDRICH HALL
BATHROOM RENOVATIONS &
DOOR & SIGNAGE REPLACEMENT
KINGSTON, RI

Key Plan

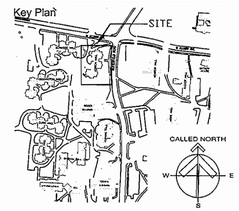

Seals

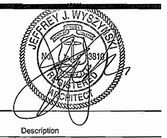

Issues

Date	Description
12/20/2012	FOR CONSTRUCTION

Revisions

No.	Date	Description
1	12/05/2012	REVIEW

Drawing Title

TITLE SHEET

Issue Date:	12/20/2012		
Project No:	KC.R.ROGW.2010.001	Scale:	AS NOTED
Project Manager:	MT	Production Leader:	MS
Project Architect:	MT	Peer Reviewer:	JM

Drawing Number

G0.0

ABBREVIATIONS

AB	ANCHOR BOLT
ACI	AMERICAN CONCRETE INSTITUTE
ACOUST	ACOUSTICAL
AC	AIR CONDITIONER
ADJ	ADJUSTABLE
AFF	ABOVE FINISH FLOOR
ALT	ALTERNATE
ALUM	ALUMINUM
ANCH	ANCHOR
ANOD	ANODIZED
ARCH	ARCHITECT
ASTM	AMERICAN SOCIETY FOR TESTING MATERIALS
BL	BUILDING LINE
BOC	BOTTOM OF CURB
BD	BOARD
BIT	BITUMINOUS
BLDG	BUILDING
BLK	BLOCK
BLKG	BLOCKING
BM	BEAM
BOF	BOTTOM OF FOOTING ELEVATION
BOT	BOTTOM
BRG	BEARING
BRK	BRICK
BTW	BETWEEN
BUR	BUILT UP ROOF
C	CENTER LINE
CAB	CABINET
CB	CATCH BASIN
CER	CERAMIC
CI	CAST IRON
CJ	CONTROL JOINT
CL	CLOSET
CLCB	CURBLESS CATCH BASIN
CTR	CENTER
CLG	CEILING
CLR	CLEAR (DIMENSION)
CM	CONTRACT MANAGER
CMU	CONCRETE MASONRY UNIT
CO	CLEAN OUT
COL	COLUMN
COMP	COMPACTED (COMPOSITION)
CONC	CONCRETE
CONST	CONSTRUCTION
CONT	CONTINUOUS
CONTR	CONTRACTOR
CORR	CORRUGATED
CP	CONTROL PANEL
CSG	CASING
CSMT	CASMENT
CT	CERAMIC TILE
CF	CUBIC FOOT
CY	CUBIC YARD
DF	DRINKING FOUNTIAN
DIA	DIAMETER
DIAG	DIAGONAL
DIM	DIMENSION
DL	DEAD LOAD
DN	DOWN
DR	DOOR
DS/C	DRIVE SIDE OF CURB
DTL	DETAIL
DWG	DRAWING
E	EAST
EJ	EXPANSION JOINT
EL	ELEVATION
ELEC	ELECTRICAL
ELEV	ELEVATOR
EQ	EQUAL
EQUIP	EQUIPMENT
ER	EMERGENCY ROOM
EST	ESTIMATE
EW	EACH WAY
EWC	ELECTRIC WATER COOLER
EXH	EXHUAST
EXIST	EXISTING
EXP	EXPANSION
EXPD	EXPANDED
EXT	EXTERIOR
FA	FRESH AIR
FAP	FIRE ALARM PANEL
FD	FLOOR DRAIN
FDN	FOUNDATION
FE	FIRE EXTINGUISHER
FEC	FIRE EXTINGUISHER CABINET
FHC	FIRE HOSE CABINET
FIN	FINISH
FL	FLOW LINE
FLR	FLOOR
FOF	FACE OF FINISH
F/F	FACE OF FOUNDATION WALL
FOM	FACE OF MASONRY
FOS	FACE OF STUD
FR	FIRE RATED
FS	FULL SIZE
FT	FOOT
FTG	FOOTING
FUR	FURRED (ING)
GA	GAUGE
GALV	GALVINIZED
GC	GENERAL CONTRACTOR
GEN	GENERAL
GL	GLASS
GLZ	GLAZE
GRD	GRADE
GYP	GYPSUM
HC	HANDICAP
HGT	HEIGHT
HM	HOLLOW METAL
HP	HIGH POINT
HDWD	HARDWOOD
HEV	HEATING & VENTILATING
HWH	HOT WATER HEATER
HVAC	HEATING, VENTILATING AND AIR CONDITIONING
ID	INSIDE DIAMETER
IN	INCH
INSUL	INSULATION
INT	INTERIOR
INV	INVERT
JAN	JANITOR
JST	JOIST
JT	JOINT
LAM	LAMINATE
LAV	LAVATORY
MAS	MASONRY
MAT	MATERIAL
MAX	MAXIMUM
MECH	MECHANICAL
MEM	MEMBRANE
MEP	MECHANICAL, ELECTRICAL, PLUMBING
METTP	METAL TOILET PARTITION
MFR	MANUFACTURER
MTL	METAL
MH	MANHOLE
MIN	MINIMUM
MISC	MISCELLANEOUS
MO	MASONRY OPENING
MULL	MULLION
N	NORTH
NAT	NATURAL
ND	NAPKIN DISPENSER
NEC	NECESSARY
NIC	NOT IN CONTRACT
NOM	NOMINAL
NRC	NOISE REDUCTION COEFFICIENT
NTS	NOT TO SCALE
OC	ON CENTER
OD	OUTSIDE DIAMETER
OFIC	OUTSIDE FACE OF CONCRETE
OH	OVERHEAD
OPG	OPENING
OPP	OPPOSITE
OR	OPERATING ROOM
PL	PROPERTY LINE
PBD	PARTICLE BOARD
PCF	POUNDS PER CUBIC FOOT
PLAM	PLASTIC LAMINATE
PLAS	PLASTER
PNL	PANEL
PSF	POUNDS PER SQUARE FOOT
PSI	POUNDS PER SQUARE INCH
PT	PAINT
PTD	PAINTED
PTN	PARTITION
PVC	POLYVINYL CHLORIDE
PLYWD	PLYWOOD
QT	QUARRY TILE
R	RADIUS OR RISER
R/A	RETURN AIR
RC	REINFORCED CONCRETE
RD	ROOF DRAIN
REF	REFERENCE
REFR	REFRIGERATOR
REINF	REINFORCE
REQD	REQUIRED
RGH	ROUGH
RL	RAIN LEADER
RM	ROOM
RQMT	REQUIREMENT
RO	ROUGH OPENING
ROW	RIGHT OF WAY
S	SOUTH OR SINK
SC	SOLID CORE
SCED	SCHEDULE
SF	SQUARE FOOT
SH	SHOWER OR SHELF
SHT	SHEET
SIM	SIMILAR
SL	SLIDING
SMR	SINGLE PLY MEMBRANE ROOF
SP/PT/FIN	SPECIAL PAINT FINISH
SPEC	SPECIFICATIONS
SPKR	SPEAKER
SQ	SQUARE
SSTL	STAINLESS STEEL
STA	STATION
STD	STANDARD
STL	STEEL
STOR	STORAGE
STRUCT	STUCTURAL
SUSP	SUSPEND (ED)
SYS	SYSTEM
T	TREAD
TB	TACKBOARD
TOC	TOP OF CURB
TEL	TELEPHONE
TEMP	TEMERATURE OR TEMPORARY
TERR	TERRAZZO
T/FRM	TOP OF FRAME
T&G	TONGUE & GROOVED
THLD	THRESHOLD
THK	THICK
TLT	TOILET
TR	TO REMAIN
TYP	TYPICAL
TOF	TOP OF FOUNDATION
TOW	TOP OF WALL ELEVATION
TOS	TOP OF STEEL ELEVATION
TSLB	TOP OF SLAB
UH	UNIT HEATER
UL	UNDERWRITERS LABORATORIES, INC.
UCD	UNDERSIDE OF DECK
ULNR	UNLESS OTHERWISE NOTED
UR	URINAL
UV	UNIT VENTILATOR
VAR	VARIES OR VARIABLE
VB	VINYL BASE
VCT	VINYL COMPOSITION TILE
VERT	VERTICAL
VEST	VESTIBULE
VIF	VERIFY IN FIELD
VNR	VENEER
VOL	VOLUME
W	WEST OR WIDTH
W/	WITH
WC	WATER CLOSET
WD	WOOD
WDW	WINDOW
WGL	WIRE GLASS
WP	WEATHERPROOF (WATERPROOFING)
WWF	WELDED WIRE FABRIC

DOOR HARDWARE INSTALLATION DIMENSIONS

- ALL DIMENSIONS NOTED TO THE RIGHT ARE RECOMMENDED MANUFACTURER'S STANDARDS THAT MEET ANSI AND ADA REQUIREMENTS.
- DIMENSIONS TO THE RIGHT ARE INDUSTRY STANDARDS, ANY CONFLICTS BEWTWEEN ARCHITECTURAL DETAILS WITHIN DOCUMENTS, AND INDUSTRY STANDARD DIMENSIONS ARE TO BE REVIEWED WITH ARCHITECT PRIOR TO HARDWARE INSTALLATION.
- ALL DIMENSIONS NOTED ARE TAKEN FROM FINISH FLOOR TO CENTER LINE OF DEVICE.

* PUSH PLATE - 45" TO CENTERLINE.
* DOOR PULL - 42" TO CENTERLINE.
* KNOBS AND LEVERS - 38" TO 42" TO CENTERLINE OF DEVICE.
* HOSPITAL LATCHSET - 45 3/4" TO CENTERLINE OF LATCH BOLT.
* DEAD LOCK - 48" TO CENTERLINE.
* PANIC DEVICE - 42" TO CENTERLINE.

GRAPHIC SYMBOLS

COLUMN AND/OR GRID IDENTIFICATION

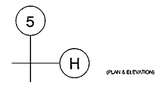

CROSS SECTION IDENTIFICATION

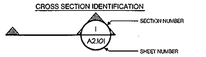

INTERIOR ELEVATION IDENTIFICATION

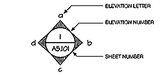

INTERIOR ELEVATION IDENTIFICATION

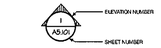

DETAIL IDENTIFICATION

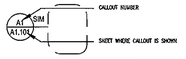

ROOM NUMBER (TAG)

CONFERENCE
201

DOOR NUMBER (TAG)

201

DEMOLITION KEY NOTE (TAG)

1

CONSTRUCTION KEY NOTE (TAG)

1

WALL TYPE

2

CEILING GRID START POINT

S.P.

HEIGHT MARK (T/S, T/SLB.)

T/S
EL. 100'-0"

DIMENSION LINES

ALL CENTER LINE DIMENSIONS

ALL OTHER DIMENSIONS

MANEUVERING CLEARANCES FOR ALL DOORS

NOTE:
ALL DOOR OPENINGS TO BE ABLE TO PASS A 32"ø(60)H CYLINDER, THIS INCLUDES HDWRE. MTD. ON DR.

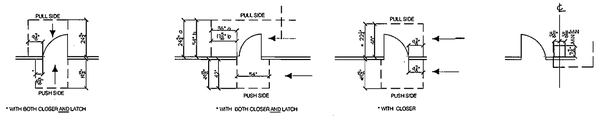

FIXTURE HEIGHTS

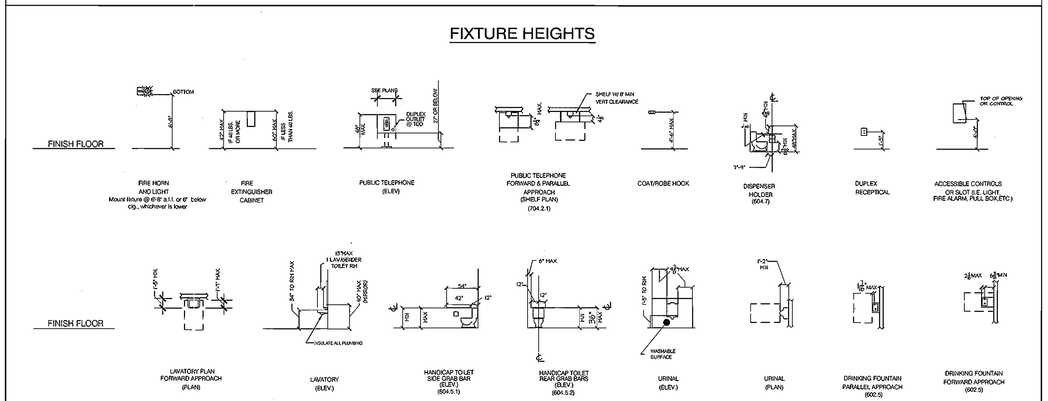

MATERIAL SYMBOLS

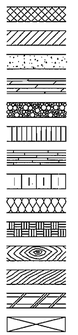

APPLICABLE CODES

1. 2002 RHODE ISLAND STATE REHABILITATION BUILDING AND FIRE CODES FOR EXISTING BUILDINGS AND STRUCTURES.
2. SBC–1 RHODE ISLAND STATE BUILDING CODE.
3. SBC–3 RHODE ISLAND STATE PLUMBING CODE.
4. SBC–4 RHODE ISLAND STATE MECHANICAL CODE.
5. SBC–5 RHODE ISLAND STATE ELECTRICAL CODE.
6. SBC–8 RHODE ISLAND STATE ENERGY CONSERVATION CODE.
7. RHODE ISLAND FIRE SAFETY CODE.
8. RHODE ISLAND FIRE PREVENTION CODE.
9. NFPA 101.
10. LIFE SAFETY CODE FOR EXISTING BUILDINGS.

GENERAL BUILDING INFORMATION

ALDRICH RESIDENCE HALL BUILDING INFORMATION

OCCUPANCY USE:	R2 – RESIDENTIAL DORMITORY
EXISTING CONSTRUCTION TYPE:	IIA
FLOOR AREA:	VARIES
TOTAL FLOOR AREA:	30,566 S.F.
HEIGHT:	4 STORIES AND BASEMENT
FIRE SUPPRESSION SYSTEM	FULLY SPRINKLERED
FIRE ALARM:	YES
FIRE RATING:	CORRIDOR WALLS 30 MIN. BATHROOM DOORS 20 MIN.
ACCESSIBILITY:	NO

ALTERNATE BIDS

1. FLOOR DRAINS @ ALL BATHROOMS ON SECOND, THIRD & FOURTH FLOORS AS WELL AS @ ROOM NUMBER C100F ON THE FIRST FLOOR
2. REPLACE ALL DOORS AT EXTERIOR; BEDROOMS, BATHROOMS, OFFICES AND STORAGE AS PER DOOR SCHEDULE.

NOTE: REPLACEMENT OF BATHROOM DOORS IS PART OF BASE BID.

ALLOWANCES

1. MODIFICATION OF FRAME MORTISES DUE TO ADJUSTMENTS FOR NEW HARDWARE AND REPAIR OF CORRODED FRAMES (BOTTOM) WITH BONDO & SAND SMOOTH. $20,000 PER BLDG. = $120,000
2. ADJUSTMENT TO DOOR UNDERCUTS DUE TO FLOOR SETTLEMENT. $10,000 PER BLDG. = $60,000
3. APPLICATION OF METAL LATH AND PLASTER OF BATHROOM WALLS TO PATCH DUE TO HIDDEN DAMAGE. $20,000 PER BLDG. = $120,000

KEY PLAN

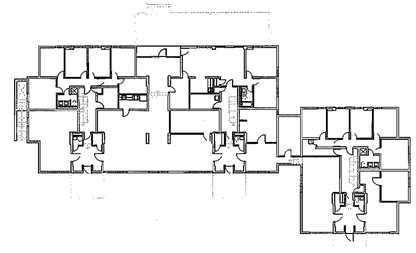

TectonArchitects | inc
1 Hartford Sq. West, Hartford CT 06106
860 548 0802
17 Railroad Avenue, Westerly RI 02891
401 596 7555
tectonarchitects.com

Notice:
This drawing is the property of Tecton Architects | inc The use, re-use or reproduction of this drawing for any purpose whatsoever without an expressed written agreement between Tecton Architects | inc and the user is prohibited. Rights to use the information on this sheet are not transferred until payment has been received for services rendered. Any rights so granted are non-transferable to other parties without the prior expressed written consent of Tecton Architects | inc
© 2012 Tecton Architects | inc

Consultant

Owner
THE UNIVERSITY OF RHODE ISLAND
THINK BIG WE DO

Project
University of Rhode Island
ALDRICH HALL
BATHROOM RENOVATIONS & DOOR & SIGNAGE REPLACEMENT
KINGSTON, RI

Key Plan

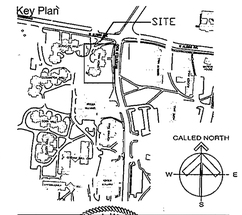

Seals

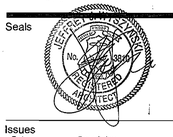

Issues

Date	Description
12/20/2012	FOR CONSTRUCTION

Revisions

No.	Date	Description
1	12/05/2012	REVIEW

Drawing Title

GENERAL INFORMATION

Issue Date:	12/20/2012		
Project No:	KC.R.ROGW.2010.001	Scale:	AS NOTED
Project Manager:	MT	Production Leader:	MS
Project Architect:	MT	Peer Reviewer:	JM

Drawing Number

G0.101

GENERAL DEMOLITION NOTES

1. COORDINATE ALL DEMOLITION WITH NEW CONSTRUCTION REQUIREMENTS
2. THE CONTRACTOR SHALL BE RESPONSIBLE FOR THE REMOVAL & LAWFUL DISPOSAL OF ALL MATERIALS AS DESCRIBED.
3. PROVIDE TEMPORARY SURFACE PROTECTION DURING REMOVAL OF ITEMS. CONTRACTOR IS RESPONSIBLE FOR ANY SURFACE/FLOOR/FINISH DAMAGE THAT MAY OCCUR.
4. MECHANICAL, ELECTRICAL AND OR OTHER WORK RELATED TO A WALL OR AREA SCHEDULED FOR DEMOLITION AND REMOVAL SHALL BE PERFORMED WETHER SO NOTED OR NOT. PROTECT ALL ITEMS INTENDED FOR SALVAGE AND REUSE OR SCHEDULED TO REMAIN.
5. WHERE DOORS AND TRANSOMS ARE SHOWN TO BE DEMOLISHED FRAMES ARE TO REMAIN. PATCH AND REPAIR ANY DAMAGE TO EXISTING DOOR FRAME AND PREPARE FOR INSTALLATION OF NEW DOOR AND TRANSOM. COORDINATE WITH DOOR SCHEDULE.

DEMOLITION LEGEND

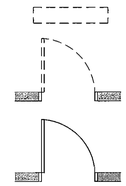

ITEM TO BE DEMOLISHED

EXISTING DOOR AND TRANSOM TO BE REMOVED (AS PER SCHEDULE)

EXISTING DOOR AND TRANSOM TO REMAIN (AS PER SCHEDULE)

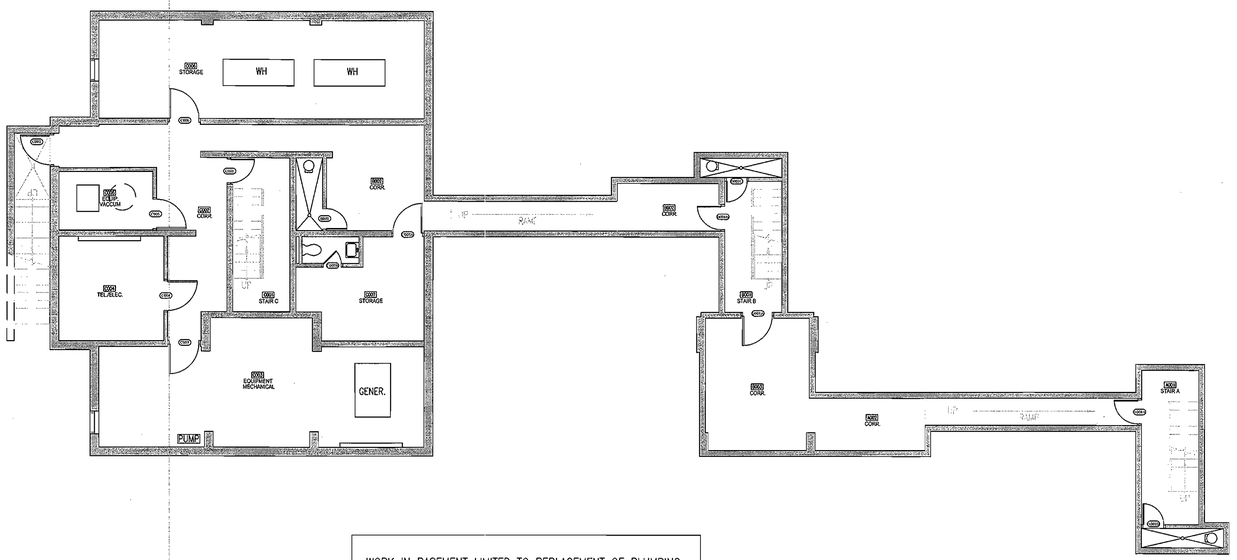

WORK IN BASEMENT LIMITED TO REPLACEMENT OF PLUMBING RISERS AND DRAINS FROM FLOOR ABOVE.

HIC BASEMENT REFERENCE FLOOR PLAN

SCALE: 1/8"=1'-0"

TectonArchitects | inc

1 Hartford Sq. West, Hartford CT 06106
860 548 0802

17 Railroad Avenue, Westerly RI 02891
401 596 7555

tectonarchitects.com

Notice:
This drawing is the property of Tecton Architects | inc The use, re-use or reproduction of this drawing for any purpose whatsoever without an expressed written agreement between Tecton Architects | inc and the user is prohibited. Rights to use the information on this sheet are not transferred until payment has been received for services rendered. Any rights so granted are non-transferable to other parties without the prior expressed written consent of Tecton Architects | inc

© 2012 Tecton Architects | inc

Consultant

Owner

THE UNIVERSITY OF RHODE ISLAND

THINK BIG WE DO

Project

University of Rhode Island
ALDRICH HALL
BATHROOM RENOVATIONS & DOOR & SIGNAGE REPLACEMENT
KINGSTON, RI

Key Plan

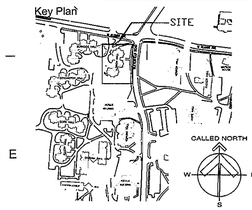

Seals

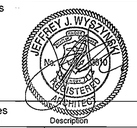

Issues

Date	Description
12/20/2012	FOR CONSTRUCTION

Revisions

No.	Date	Description
1	12/05/2012	REVIEW

Drawing Title

REFERENCE FLOOR PLAN

Issue Date:	12/20/2012		
Project No:	KC.R.ROGW.2010.001	Scale:	AS NOTED
Project Manager:	MT	Production Leader:	MS
Project Architect:	MT	Peer Reviewer:	JM

Drawing Number

A2.100

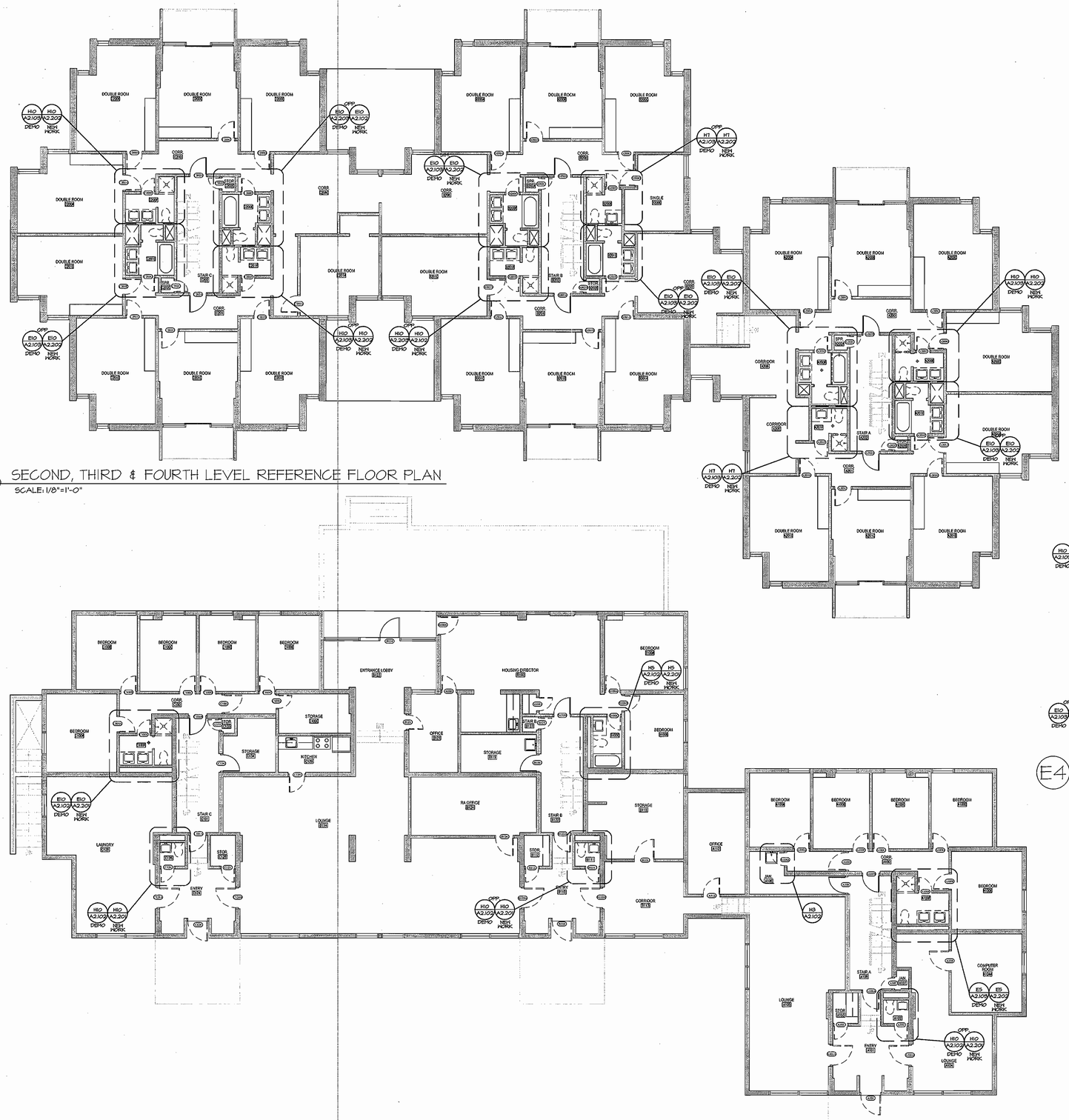

D10 SECOND, THIRD & FOURTH LEVEL REFERENCE FLOOR PLAN

SCALE: 1/8"=1'-0"

H1C GROUND LEVEL REFERENCE FLOOR PLAN

SCALE: 1/8"=1'-0"

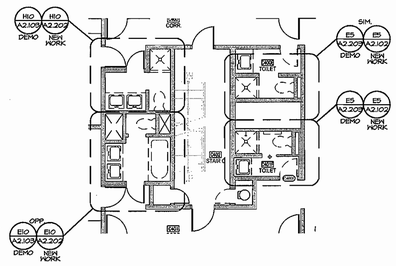

E4 FOURTH FLOOR REFERENCE FLOOR PLAN

SCALE: 1/8"=1'-0"

GENERAL DEMOLITION NOTES

1. COORDINATE ALL DEMOLITION WITH NEW CONSTRUCTION REQUIREMENTS
2. THE CONTRACTOR SHALL BE RESPONSIBLE FOR THE REMOVAL & LAWFUL DISPOSAL OF ALL MATERIALS AS DESCRIBED.
3. PROVIDE TEMPORARY SURFACE PROTECTION DURING REMOVAL OF ITEMS. CONTRACTOR IS RESPONSIBLE FOR ANY SURFACE/FLOOR/FINISH DAMAGE THAT MAY OCCUR.
4. MECHANICAL, ELECTRICAL AND OR OTHER WORK RELATED TO A WALL OR AREA SCHEDULED FOR DEMOLITION AND REMOVAL SHALL BE PERFORMED WETHER SO NOTED OR NOT. PROTECT ALL ITEMS INTENDED FOR SALVAGE AND REUSE OR SCHEDULED TO REMAIN.
5. WHERE DOORS AND TRANSOMS ARE SHOWN TO BE DEMOLISHED FRAMES ARE TO REMAIN. PATCH AND REPAIR ANY DAMAGE TO EXISTING DOOR FRAME AND PREPARE FOR INSTALLATION OF NEW DOOR AND TRANSOM. COORDINATE WITH DOOR SCHEDULE.

DEMOLITION LEGEND

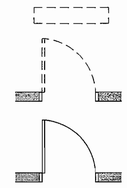

ITEM TO BE DEMOLISHED

EXISTING DOOR AND TRANSOM TO BE REMOVED (AS PER SCHEDULE)

EXISTING DOOR AND TRANSOM TO REMAIN (AS PER SCHEDULE)

TectonArchitects | inc

1 Hartford Sq. West, Hartford CT 06106
860 548 0802

17 Railroad Avenue, Westerly RI 02891
401 596 7555

tectonarchitects.com

Notice:
This drawing is the property of Tecton Architects | inc The use, re-use or reproduction of this drawing for any purpose whatsoever without an expressed written agreement between Tecton Architects | inc and the user is prohibited. Rights to use the information on this sheet are not transferred until payment has been received for services rendered. Any rights so granted are non-transferable to other parties without the prior expressed written consent of Tecton Architects | inc

© 2012 Tecton Architects | inc

Consultant

Owner

THE UNIVERSITY OF RHODE ISLAND

THINK BIG WE DO

Project

University of Rhode Island
ALDRICH HALL
BATHROOM RENOVATIONS & DOOR & SIGNAGE REPLACEMENT
KINGSTON, RI

Key Plan

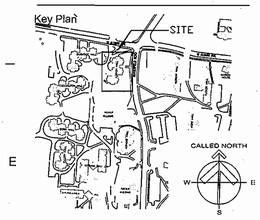

Seals

Issues

Date	Description
12/20/2012	FOR CONSTRUCTION

Revisions

No.	Date	Description
1	12/05/2012	REVIEW

Drawing Title

REFERENCE FLOOR PLANS

Issue Date:	12/20/2012		
Project No:	KC.R.ROGW. 2010.001	Scale:	AS NOTED
Project Manager:	MT	Production Leader:	MS
Project Architect:	MT	Peer Reviewer:	JM

Drawing Number

A2.101

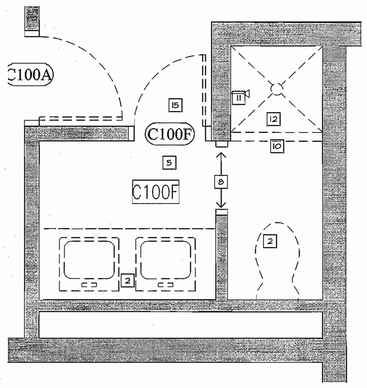

E10 BATHROOM DEMOLITION PLAN - (C100F)
SCALE: 1/2" = 1'-0"

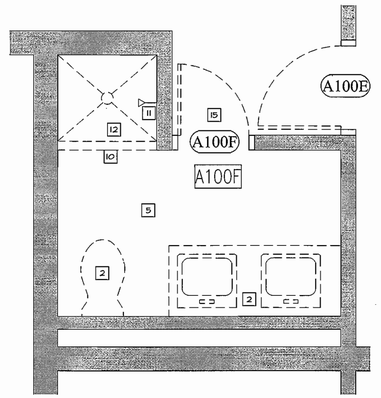

E5 BATHROOM DEMOLITION PLAN - (A100F)
SCALE: 1/2" = 1'-0"

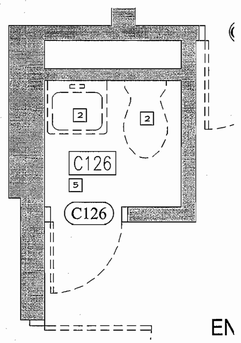

EN

H10 BATHROOM DEMOLITION PLAN - (A102, B111, C126)
SCALE: 1/2" = 1'-0"

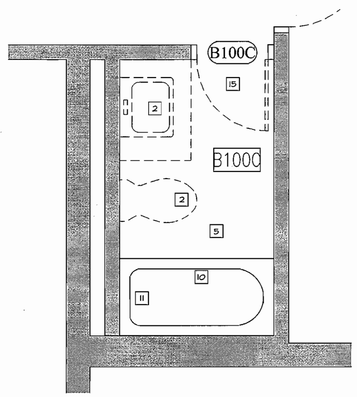

H5 BATHROOM DEMOLITION PLAN - (B100C)
SCALE: 1/2" = 1'-0"

GENERAL DEMOLITION NOTES

1. COORDINATE ALL DEMOLITION WITH NEW CONSTRUCTION REQUIREMENTS
2. THE CONTRACTOR SHALL BE RESPONSIBLE FOR THE REMOVAL & LAWFUL DISPOSING OF ALL MATERIALS AS DESCRIBED.
3. PROVIDE TEMPORARY SURFACE PROTECTION DURING REMOVAL OF ITEMS. CONTRACTOR IS RESPONSIBLE FOR ANY SURFACE/FLOOR/FINISH DAMAGE THAT MAY OCCUR.
4. MECHANICAL, ELECTRICAL AND OR OTHER WORK RELATED TO A WALL OR AREA SCHEDULED FOR DEMOLITION AND REMOVAL SHALL BE PERFORMED WETHER SO NOTED OR NOT. PROTECT ALL ITEMS INTENDED FOR SALVAGE AND REUSE OR SCHEDULED TO REMAIN.
5. WHERE DOORS AND TRANSOMS ARE SHOWN TO BE DEMOLISHED FRAMES ARE TO REMAIN. PATCH AND REPAIR ANY DAMAGE TO EXISTING DOOR FRAME AND PREPARE FOR INSTALLATION OF NEW DOOR. COORDINATE WITH DOOR SCHEDULE.
6. REMOVE EXISTING WALL TILE IN BATHTUB STALL

DEMOLITION KEY NOTES

1. REMOVE AND DISPOSE OF ALL EXISTING BATHROOM CEILINGS.
2. REMOVE & DISPOSE OF EXISTING TOILETS, LAVATORIES, FAUCETS, COUNTERS AND CABINETS.
3. REMOVE AND RELOCATE EXISTING LIGHT SWITCH AS REQUIRED. REFER TO (E) DRAWINGS.
4. REMOVE EXHAUST GRILLE IN CEILING. CLEAN AND VACUUM EXHAUST DUCT. CLEAN & STORE EXHAUST GRILL FOR REINSTALLATION WITH NEW CEILING.
5. SANDBLAST PAINTED CONCRETE FLOOR & PREPARE FOR NEW FLOOR INSTALLATION.
6. REMOVE & DISPOSE OF RUBBER COVE AT ALL BATHROOM WALLS AND BATHTUB SKIRTS.
7. REMOVE & DISPOSE OF EXISTING LIGHT FIXTURES.
8. REMOVE & DISPOSE OF EXISTING DOOR FRAMES & WATER CLOSET FRAMED OPENINGS. SECURE & PREPARE WALL FOR NEW FRAMED OPENING. PATCH PLASTER SMOOTH FINISH AT OPENING PERIMETER.
9. REMOVE & DISPOSE OF EXISTING TOWEL BARS, TOILET PAPER DISPENSER AND MIRRORS. PATCH HOLES IN WALL.
10. REMOVE & DISPOSE OF EXISTING SHOWER ROD AND CURTAIN.
11. REMOVE & DISPOSE OF EXISTING SHOWER VALVES, DRAINS & SHOWERHEADS. NOTE: WORK TO BE PERFORMED BY BATHFITTERS
12. REMOVE & DISPOSED OF EXISTING FIBERGLASS SHOWER BASIN. NOTE: WORK TO BE PERFORMED BY BATHFITTERS
13. (ALTERNATE #1) CORE DRILL EXISTING CONCRETE SLAB TO PREPARE FOR NEW FLOOR DRAIN. COORDINATE SIZE AND LOCATION WITH P-DRAWINGS AND FINISHES.
14. REMOVE AND SALVAGE HEATER CABINET ENDS AND COVERS FOR REINSTALLATION. NOTE: APPLIES TO BATHROOM #C100G & ALL OF FOURTH FLOOR BATHROOMS.
15. (BASE BID) REMOVE EXISTING DOOR, HINGES AND TRANSOM PANEL FROM FRAME. PREPARE FOR INSTALLATION OF NEW TRANSOM PANEL, DOOR AND DOOR HARDWARE AS PER SCHEDULE.

DEMOLITION LEGEND

ITEM TO BE DEMOLISHED

EXISTING DOOR AND TRANSOM TO BE REMOVED (AS PER SCHEDULE)

EXISTING DOOR AND TRANSOM TO REMAIN (AS PER SCHEDULE)

TectonArchitects | inc
1 Hartford Sq. West, Hartford CT 06106
860 548 0802
17 Railroad Avenue, Westerly RI 02891
401 596 7555
tectonarchitects.com

Notice:
This drawing is the property of Tecton Architects | inc The use, re-use or reproduction of this drawing for any purpose whatsoever without an expressed written agreement between Tecton Architects | inc and the user is prohibited. Rights to use the information on this sheet are not transferred until payment has been received for services rendered. Any rights so granted are non-transferable to other parties without the prior expressed written consent of Tecton Architects | inc

© 2012 Tecton Architects | inc

Consultant

Owner
THE UNIVERSITY OF RHODE ISLAND
THINK BIG WE DO

Project
University of Rhode Island
ALDRICH HALL
BATHROOM RENOVATIONS & DOOR & SIGNAGE REPLACEMENT
KINGSTON, RI

Key Plan

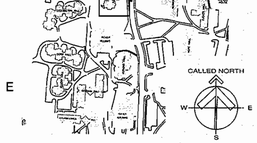

Seals

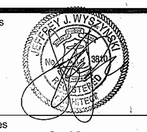

Issues

Date	Description
12/20/2012	FOR CONSTRUCTION

Revisions

No.	Date	Description
1	12/05/2012	REVIEW

Drawing Title
ENLARGED BATHROOM DEMOLITION FLOOR PLANS

Issue Date:	12/20/2012
Project No: KC.R.ROGW.2010.001	Scale: AS NOTED
Project Manager: MT	Production Leader: MS
Project Architect: MT	Peer Reviewer: JM

Drawing Number
A2.102

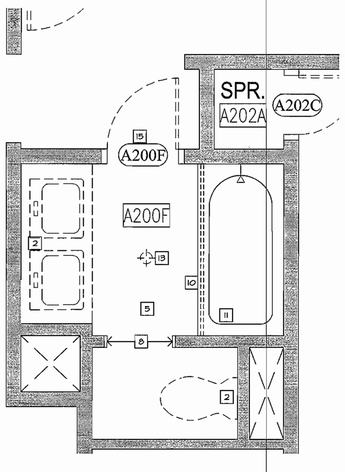

E10 BATHROOM DEMOLITION PLAN - (A200F, A201E, B200F, B201E, C200E, C201G)
SCALE: 1/2" = 1'-0"
TYPICAL @ 2ND, 3RD & 4TH FLOORS

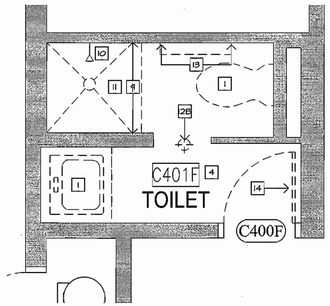

E5 BATHROOM DEMOLITION PLAN - (B400F, B401F, C400E, C401F)
SCALE: 1/2" = 1'-0"

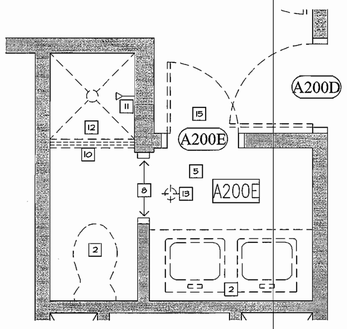

H10 BATHROOM DEMOLITION PLAN - (A200E, B201F, C200F, C201F)
SCALE: 1/2" = 1'-0"
TYPICAL @ 2ND, 3RD & 4TH FLOORS

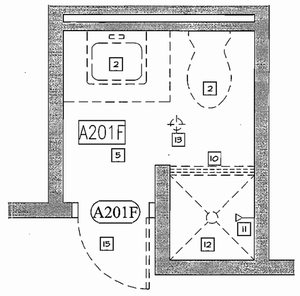

H7 BATHROOM DEMOLITION PLAN - (A201F, B200E)
SCALE: 1/2" = 1'-0"
TYPICAL @ 2ND, 3RD & 4TH FLOORS

GENERAL DEMOLITION NOTES

1. COORDINATE ALL DEMOLITION WITH NEW CONSTRUCTION REQUIREMENTS
2. THE CONTRACTOR SHALL BE RESPONSIBLE FOR THE REMOVAL & LAWFUL DISPOSING OF ALL MATERIALS AS DESCRIBED.
3. PROVIDE TEMPORARY SURFACE PROTECTION DURING REMOVAL OF ITEMS. CONTRACTOR IS RESPONSIBLE FOR ANY SURFACE/FLOOR/FINISH DAMAGE THAT MAY OCCUR.
4. MECHANICAL, ELECTRICAL AND OR OTHER WORK RELATED TO A WALL OR AREA SCHEDULED FOR DEMOLITION AND REMOVAL SHALL BE PERFORMED WETHER SO NOTED OR NOT. PROTECT ALL ITEMS INTENDED FOR SALVAGE AND REUSE OR SCHEDULED TO REMAIN.
5. WHERE DOORS AND TRANSOMS ARE SHOWN TO BE DEMOLISHED FRAMES ARE TO REMAIN. PATCH AND REPAIR ANY DAMAGE TO EXISTING DOOR FRAME AND PREPARE FOR INSTALLATION OF NEW DOOR. COORDINATE WITH DOOR SCHEDULE.
6. REMOVE EXISTING WALL TILE IN BATHTUB STALL

DEMOLITION KEY NOTES

1. REMOVE AND DISPOSE OF ALL EXISTING BATHROOM CEILINGS.
2. REMOVE & DISPOSE OF EXISTING TOILETS, LAVATORIES, FAUCETS, COUNTERS AND CABINETS.
3. REMOVE AND RELOCATE EXISTING LIGHT SWITCH AS REQUIRED. REFER TO (E) DRAWINGS.
4. REMOVE EXHAUST GRILLE IN CEILING. CLEAN AND VACUUM EXHAUST DUCT. CLEAN & STORE EXHAUST GRILL FOR REINSTALLATION WITH NEW CEILING.
5. SANDBLAST PAINTED CONCRETE FLOOR & PREPARE FOR NEW FLOOR INSTALLATION.
6. REMOVE & DISPOSE OF RUBBER COVE AT ALL BATHROOM WALLS AND BATHTUB SKIRTS.
7. REMOVE & DISPOSE OF EXISTING LIGHT FIXTURES.
8. REMOVE & DISPOSE OF EXISTING DOOR FRAMES & WATER CLOSET FRAMED OPENINGS. SECURE & PREPARE WALL FOR NEW FRAMED OPENING. PATCH PLASTER SMOOTH FINISH AT OPENING PERIMETER.
9. REMOVE & DISPOSE OF EXISTING TOWEL BARS, TOILET PAPER DISPENSER AND MIRRORS. PATCH HOLES IN WALL.
10. REMOVE & DISPOSE OF EXISTING SHOWER ROD AND CURTAIN.
11. REMOVE & DISPOSE OF EXISTING SHOWER VALVES, DRAINS & SHOWERHEADS. NOTE: WORK TO BE PERFORMED BY BATHFITTERS
12. REMOVE & DISPOSED OF EXISTING FIBERGLASS SHOWER BASIN. NOTE: WORK TO BE PERFORMED BY BATHFITTERS
13. (ALTERNATE #1) CORE DRILL EXISTING CONCRETE SLAB TO PREPARE FOR NEW FLOOR DRAIN. COORDINATE SIZE AND LOCATION WITH P-DRAWINGS AND FINISHES.
14. REMOVE AND SALVAGE HEATER CABINET ENDS AND COVERS FOR REINSTALLATION. NOTE: APPLIES TO BATHROOM #C100G & ALL OF FOURTH FLOOR BATHROOMS.
15. (BASE BID) REMOVE EXISTING DOOR, HINGES AND TRANSOM PANEL FROM FRAME. PREPARE FOR INSTALLATION OF NEW TRANSOM PANEL, DOOR AND DOOR HARDWARE AS PER SCHEDULE.

DEMOLITION LEGEND

ITEM TO BE DEMOLISHED

EXISTING DOOR AND TRANSOM TO BE REMOVED (AS PER SCHEDULE)

EXISTING DOOR AND TRANSOM TO REMAIN (AS PER SCHEDULE)

TectonArchitects | inc
1 Hartford Sq. West, Hartford CT 06106
860 548 0802
17 Railroad Avenue, Westerly RI 02891
401 596 7555
tectonarchitects.com

Notice:
This drawing is the property of Tecton Architects | inc The use, re-use or reproduction of this drawing for any purpose whatsoever without an expressed written agreement between Tecton Architects | inc and the user is prohibited. Rights to use the information on this sheet are not transferred until payment has been received for services rendered. Any rights so granted are non-transferable to other parties without the prior expressed written consent of Tecton Architects | inc

© 2012 Tecton Architects | inc

Consultant

Owner
THE UNIVERSITY OF RHODE ISLAND
THINK BIG WE DO

Project
University of Rhode Island
ALDRICH HALL
BATHROOM RENOVATIONS & DOOR & SIGNAGE REPLACEMENT
KINGSTON, RI

Key Plan

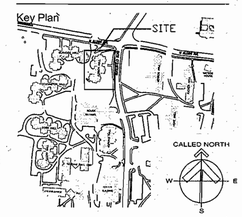

Seals

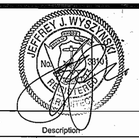

Issues

Date	Description
12/20/2012	FOR CONSTRUCTION

Revisions

No.	Date	Description
1	12/05/2012	REVIEW

Drawing Title
ENLARGED BATHROOM DEMOLITION FLOOR PLANS

Issue Date: 12/20/2012

Project No:	KC.R.ROGW.2010.001	Scale:	AS NOTED
Project Manager:	MT	Production Leader:	MS
Project Architect:	MT	Peer Reviewer:	JM

Drawing Number
A2.103

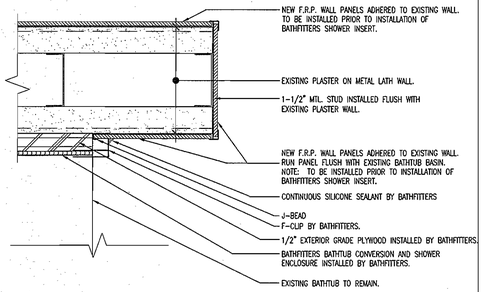

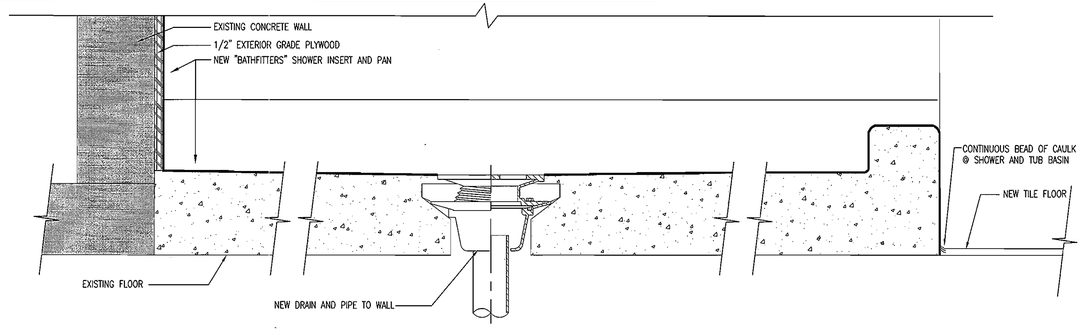

B10 F.R.P. END PANEL @ BATHFITTERS SHOWER ENCLOSURE

SCALE: 6" = 1'-0"

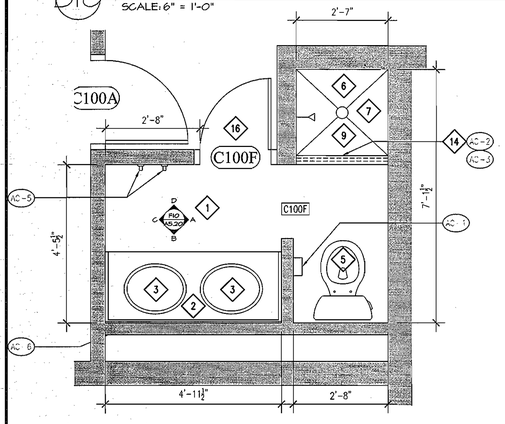

B7 SHOWER DRAIN DETAIL

SCALE: 3" = 1'-0"

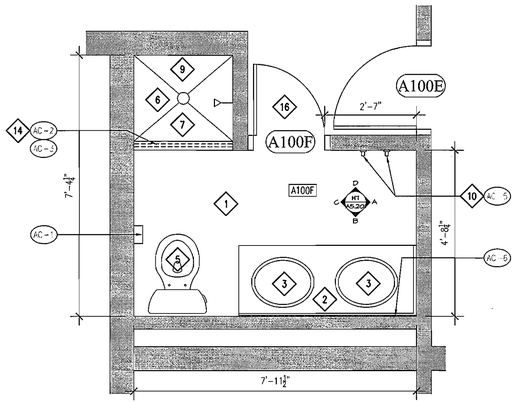

E10 BATHROOM FLOOR PLAN - (C100F)

SCALE: 1/2" = 1'-0"

E5 BATHROOM FLOOR PLAN - (A100F)

SCALE: 1/2" = 1'-0"

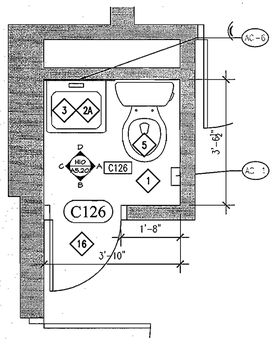

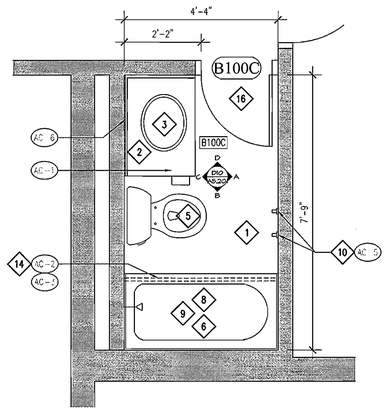

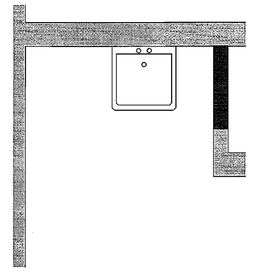

H10 BATHROOM FLOOR PLAN - (A102, B11, C126)

SCALE: 1/2" = 1'-0"

H5 BATHROOM FLOOR PLAN - (B100C)

SCALE: 1/2" = 1'-0"

H3 JANITORS CLOSET - (A106)

SCALE: 1/2" = 1'-0"

CONSTRUCTION NOTES

1. PREPARE SUBFLOOR AND INSTALL NEW 2X2 CERAMIC TILE FLOORING & COVE.
2. INSTALL NEW SOLID SURFACE COUNTER, BACK SPLASH, SIDE SPLASH AND INTEGRAL SINKS. CONNECT TO EXISTING SUPPLY AND DRAIN.
2A. INSTALL NEW WALL MOUNTED SINK CONNECT TO EXISTING SUPPLY AND DRAIN.
3. INSTALL NEW FAUCETS AND VALVES.
4. INSTALL FIBER REINFORCED PANELS FLOOR TO UNDERSIDE OF DECK ON ALL BATHROOM WALLS (EXCEPT @ SHOWER & BATHTUB STALLS - SEE ALSO DETAIL B10/A2.201).
5. INSTALL NEW TOILET AND RECONNECT TO SUPPLY AND DRAIN
6. INSTALL NEW BATHFITTERS DRAIN, VALVE AND SHOWERHEAD. (WORK TO BE PERFORMED BY BATHFITTERS).
7. INSTALL NEW BATHFITTERS SHOWER ENCLOSURES INCLUDING SHOWER PAN, WALL INSERTS & CEILING. (WORK TO BE PERFORMED BY BATHFITTERS)
8. INSTALL NEW BATHFITTERS BATHTUB LINER & WALL INSERTS. (WORK TO BE PERFORMED BY BATHFITTERS)
9. INSTALL NEW DRAIN. (WORK TO BE PERFORMED BY BATHFITTERS)
10. INSTALL NEW STAINLESS STEEL ROBE HOOKS @ 6'-0" AFF. REFER TO INTERIOR ELEVATIONS - A5.201/A5.202 FOR LOCATIONS
11. PROVIDE AND INSTALL ONE WALL MOUNTED UP/DOWN FLUORESCENT LIGHT FIXTURE ABOVE SINK AND ONE CEILING MOUNTED LIGHT FIXTURE IN FRONT OF SHOWER (SEE REFLECTED CEILING PLAN). INSTALLATION INCLUDES WIREMOLD, WIRE AND SWITCH
12. FURNISH AND INSTALL ONE 16" DEEP HEAVY DUTY, PLASTIC COATED METAL WIRE SHELF SET 8" A.F.F.
13. REINSTALL EXHAUST GRILLE IN CEILING.
14. INSTALL NEW SHOWER ROD AND CURTAIN AT EXISTING HEIGHT.
15. INSTALL ACCESS PANELS. REPLACE DAMAGED UNITS. (CONTINGENCY ALLOWANCE)
16. INSTALL NEW DOOR AND TRANSOM AS PER SCHEDULE. PATCH AND REPAIR EXISTING DOOR FRAME AND PAINT.
17. 5" TILE BASE COVE ON ALL WALLS.
18. INSTALL NEW FLOOR DRAIN. COORDINATE SIZE AND LOCATION WITH P-DRAWINGS AND FINISHES.

TOILET ACCESSORIES

AC-1	TOILET PAPER HOLDER. TO BE PROVIDED BY OWNER AND INSTALLED BY CONTRACTOR.
AC-2	STAINLESS STEEL, SATIN FINISH SHOWER ROD & MOUNTING BRACKETS.
AC-3	SHOWER CURTAIN AND SHOWER CURTAIN RINGS
AC-4	NEW HEAVY DUTY METAL WIRE SHELF - MOUNTED 8" A.F.F.
AC-5	NEW STAINLESS STEEL ROBE HOOKS MTD. 6'-0" A.F.F.
AC-6	NEW FRAMELESS MIRROR - REFER TO INTERIOR ELEVATIONS - A5.201/5.202 FOR SIZING.
AC-7	8" DEEP SOLID SURFACE PLASTIC SHELF.

NOTE:

1. BATHFITTERS INSTALLATION TO BE DONE LAST.

TectonArchitects | inc

1 Hartford Sq. West, Hartford CT 06106
860 548 0802

17 Railroad Avenue, Westerly RI 02891
401 596 7555

tectonarchitects.com

Notice:
This drawing is the property of Tecton Architects | inc The use, re-use or reproduction of this drawing for any purpose whatsoever without an expressed written agreement between Tecton Architects | inc and the user is prohibited. Rights to use the information on this sheet are not transferred until payment has been received for services rendered. Any rights so granted are non-transferable to other parties without the prior expressed written consent of Tecton Architects | inc

© 2012 Tecton Architects | inc

Consultant

Owner

THE UNIVERSITY OF RHODE ISLAND

THINK BIG WE DO

Project

University of Rhode Island
ALDRICH HALL
BATHROOM RENOVATIONS & DOOR & SIGNAGE REPLACEMENT
KINGSTON, RI

Key Plan

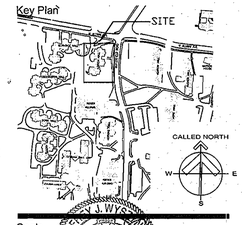

Seals

Issues

Date	Description
12/20/2012	FOR CONSTRUCTION

Revisions

No.	Date	Description
1	12/05/2012	REVIEW

Drawing Title

BATHROOM CONSTRUCTION FLOOR PLANS

Issue Date:	12/20/2012
Project No:	KC.R.ROGW.2010.001
Scale:	AS NOTED
Project Manager:	MT
Production Leader:	MS
Project Architect:	MT
Peer Reviewer:	JM

Drawing Number

A2.201

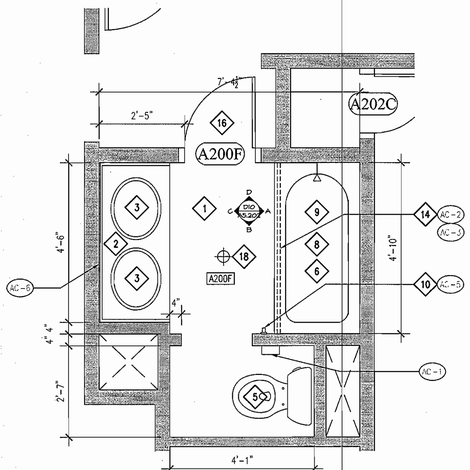

E10 BATHROOM FLOOR PLAN - (A200F, A201E, B200F, B201E, C200E, C201G)
SCALE: 1/2" = 1'-0" (TYPICAL @ 2ND, 3RD & 4TH FLOORS)

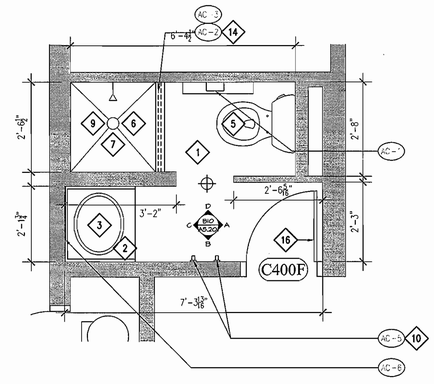

E5 BATHROOM FLOOR PLAN - (B400F, B401F, C400E, C401F)
SCALE: 1/2" = 1'-0"

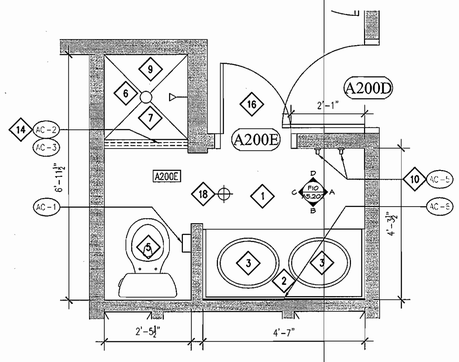

H10 BATHROOM FLOOR PLAN - (A200E, B201F, C200F, C201F)
SCALE: 1/2" = 1'-0" (TYPICAL @ 2ND, 3RD & 4TH FLOORS)

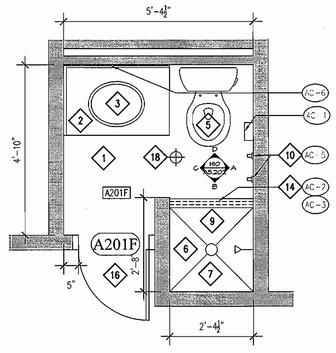

H7 BATHROOM FLOOR PLAN (B200E, A201F)
SCALE: 1/2" = 1'-0" (TYPICAL @ 2ND, 3RD & 4TH FLOORS)

CONSTRUCTION NOTES

1. PREPARE SUBFLOOR AND INSTALL NEW 2X2 CERAMIC TILE FLOORING & COVE.
2. INSTALL NEW SOLID SURFACE COUNTER, BACK SPLASH, SIDE SPLASH AND INTEGRAL SINKS. CONNECT TO EXISTING SUPPLY AND DRAIN.
2A. INSTALL NEW WALL MOUNTED SINK CONNECT TO EXISTING SUPPLY AND DRAIN.
3. INSTALL NEW FAUCETS AND VALVES.
4. INSTALL FIBER REINFORCED PANELS FLOOR TO UNDERSIDE OF DECK ON ALL BATHROOM WALLS (EXCEPT @ SHOWER & BATHTUB STALLS - SEE ALSO DETAIL B10/A2.201).
5. INSTALL NEW TOILET AND RECONNECT TO SUPPLY AND DRAIN
6. INSTALL NEW BATHFITTERS DRAIN, VALVE AND SHOWERHEAD. (WORK TO BE PERFORMED BY BATHFITTERS).
7. INSTALL NEW BATHFITTERS SHOWER ENCLOSURES INCLUDING SHOWER PAN, WALL INSERTS & CEILING. (WORK TO BE PERFORMED BY BATHFITTERS)
8. INSTALL NEW BATHFITTERS BATHTUB LINER & WALL INSERTS. (WORK TO BE PERFORMED BY BATHFITTERS)
9. INSTALL NEW DRAIN. (WORK TO BE PERFORMED BY BATHFITTERS)
10. INSTALL NEW STAINLESS STEEL ROBE HOOKS @ 6'-0" AFF. REFER TO INTERIOR ELEVATIONS - A5.201/A5.202 FOR LOCATIONS
11. PROVIDE AND INSTALL ONE WALL MOUNTED UP/DOWN FLUORESCENT LIGHT FIXTURE ABOVE SINK AND ONE CEILING MOUNTED LIGHT FIXTURE IN FRONT OF SHOWER (SEE REFLECTED CEILING PLAN). INSTALLATION INCLUDES WIREMOLD, WIRE AND SWITCH
12. FURNISH AND INSTALL ONE 16" DEEP HEAVY DUTY, PLASTIC COATED METAL WIRE SHELF SET 8" A.F.F.
13. REINSTALL EXHAUST GRILLE IN CEILING.
14. INSTALL NEW SHOWER ROD AND CURTAIN AT EXISTING HEIGHT.
15. INSTALL ACCESS PANELS. REPLACE DAMAGED UNITS. (CONTINGENCY ALLOWANCE)
16. INSTALL NEW DOOR AND TRANSOM AS PER SCHEDULE. PATCH AND REPAIR EXISTING DOOR FRAME AND PAINT.
17. 5" TILE BASE COVE ON ALL WALLS.
18. INSTALL NEW FLOOR DRAIN. COORDINATE SIZE AND LOCATION WITH P-DRAWINGS AND FINISHES.

TOILET ACCESSORIES

AC-1	TOILET PAPER HOLDER. TO BE PROVIDED BY OWNER AND INSTALLED BY CONTRACTOR.
AC-2	STAINLESS STEEL, SATIN FINISH SHOWER ROD & MOUNTING BRACKETS.
AC-3	SHOWER CURTAIN AND SHOWER CURTAIN RINGS
AC-4	NEW HEAVY DUTY METAL WIRE SHELF - MOUNTED 8" A.F.F.
AC-5	NEW STAINLESS STEEL ROBE HOOKS MTD. 6'-0" A.F.F.
AC-6	NEW FRAMELESS MIRROR - REFER TO INTERIOR ELEVATIONS - A5.201/5.202 FOR SIZING.
AC-7	8" DEEP SOLID SURFACE PLASTIC SHELF.

NOTE:

1. BATHFITTERS INSTALLATION TO BE DONE LAST.

TectonArchitects | inc
1 Hartford Sq. West, Hartford CT 06106
860 548 0802
17 Railroad Avenue, Westerly RI 02891
401 596 7555
tectonarchitects.com

Notice:
This drawing is the property of Tecton Architects | inc The use, re-use or reproduction of this drawing for any purpose whatsoever without an expressed written agreement between Tecton Architects | inc and the user is prohibited. Rights to use the information on this sheet are not transferred until payment has been received for services rendered. Any rights so granted are non-transferable to other parties without the prior expressed written consent of Tecton Architects | inc
© 2012 Tecton Architects | inc

Consultant

Owner
THE UNIVERSITY OF RHODE ISLAND
THINK BIG WE DO

Project
University of Rhode Island
ALDRICH HALL
BATHROOM RENOVATIONS & DOOR & SIGNAGE REPLACEMENT
KINGSTON, RI

Key Plan

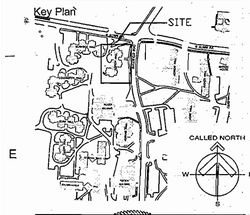

Seals

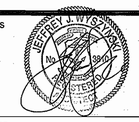

Issues

Date	Description
12/20/2012	FOR CONSTRUCTION

Revisions

No.	Date	Description
1	12/05/2012	REVIEW

Drawing Title
BATHROOM CONSTRUCTION FLOOR PLANS

Issue Date:	12/20/2012		
Project No:	KC.R.ROGW.2010.001	Scale:	AS NOTED
Project Manager:	MT	Production Leader:	MS
Project Architect:	MT	Peer Reviewer:	JM

Drawing Number
A2.202

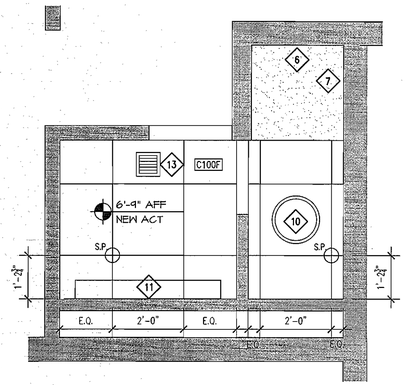

E1C BATHROOM REFLECTED CEILING PLAN - (C100F)
SCALE: 1/2" = 1'-0"

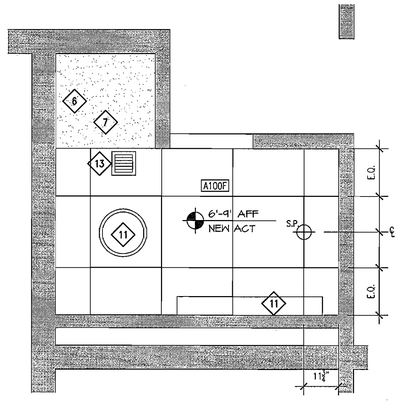

E6 BATHROOM REFLECTED CEILING PLAN - (A100F)
SCALE: 1/2" = 1'-0"

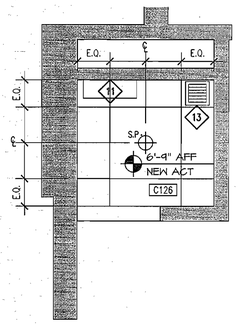

H1C BATHROOM REFLECTED CEILING PLAN - (A102, B111, C126)
SCALE: 1/2" = 1'-0"

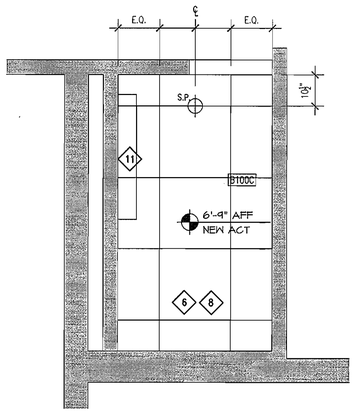

H7 BATHROOM REFLECTED CEILING PLAN - (B100C)
SCALE: 1/2" = 1'-0"

CONSTRUCTION NOTES

1. PREPARE SUBFLOOR AND INSTALL NEW 2X2 CERAMIC TILE FLOORING & COVE.
2. INSTALL NEW SOLID SURFACE COUNTER, BACK SPLASH, SIDE SPLASH AND INTEGRAL SINKS. CONNECT TO EXISTING SUPPLY AND DRAIN.
2A. INSTALL NEW WALL MOUNTED SINK CONNECT TO EXISTING SUPPLY AND DRAIN.
3. INSTALL NEW FAUCETS AND VALVES.
4. INSTALL FIBER REINFORCED PANELS FLOOR TO UNDERSIDE OF DECK ON ALL BATHROOM WALLS (EXCEPT @ SHOWER & BATHTUB STALLS – SEE ALSO DETAIL B10/A2.201).
5. INSTALL NEW TOILET AND RECONNECT TO SUPPLY AND DRAIN
6. INSTALL NEW BATHFITTERS DRAIN, VALVE AND SHOWERHEAD. (WORK TO BE PERFORMED BY BATHFITTERS).
7. INSTALL NEW BATHFITTERS SHOWER ENCLOSURES INCLUDING SHOWER PAN, WALL INSERTS & CEILING. (WORK TO BE PERFORMED BY BATHFITTERS)
8. INSTALL NEW BATHFITTERS BATHTUB LINER & WALL INSERTS. (WORK TO BE PERFORMED BY BATHFITTERS)
9. INSTALL NEW DRAIN. (WORK TO BE PERFORMED BY BATHFITTERS)
10. INSTALL NEW STAINLESS STEEL ROBE HOOKS @ 6'-0" AFF. REFER TO INTERIOR ELEVATIONS – A5.201/A5.202 FOR LOCATIONS
11. PROVIDE AND INSTALL ONE WALL MOUNTED UP/DOWN FLUORESCENT LIGHT FIXTURE ABOVE SINK AND ONE CEILING MOUNTED LIGHT FIXTURE IN FRONT OF SHOWER (SEE REFLECTED CEILING PLAN). INSTALLATION INCLUDES WIREMOLD, WIRE AND SWITCH
12. FURNISH AND INSTALL ONE 16" DEEP HEAVY DUTY, PLASTIC COATED METAL WIRE SHELF SET 8" A.F.F.
13. REINSTALL EXHAUST GRILLE IN CEILING.
14. INSTALL NEW SHOWER ROD AND CURTAIN AT EXISTING HEIGHT.
15. INSTALL ACCESS PANELS. REPLACE DAMAGED UNITS. (CONTINGENCY ALLOWANCE)
16. INSTALL NEW DOOR AND TRANSOM AS PER SCHEDULE. PATCH AND REPAIR EXISTING DOOR FRAME AND PAINT.
17. 5" TILE BASE COVE ON ALL WALLS.
18. INSTALL NEW FLOOR DRAIN. COORDINATE SIZE AND LOCATION WITH P-DRAWINGS AND FINISHES.

TOILET ACCESSORIES

AC-1	TOILET PAPER HOLDER. TO BE PROVIDED BY OWNER AND INSTALLED BY CONTRACTOR.
AC-2	STAINLESS STEEL, SATIN FINISH SHOWER ROD & MOUNTING BRACKETS.
AC-3	SHOWER CURTAIN AND SHOWER CURTAIN RINGS
AC-4	NEW HEAVY DUTY METAL WIRE SHELF – MOUNTED 8" A.F.F.
AC-5	NEW STAINLESS STEEL ROBE HOOKS MTD. 6'-0" A.F.F.
AC-6	NEW FRAMELESS MIRROR – REFER TO INTERIOR ELEVATIONS – A5.201/5.202 FOR SIZING.
AC-7	8" DEEP SOLID SURFACE PLASTIC SHELF.

REFLECTED CEILING PLAN LEGEND

- 2'x2' A.C.T TILE CEILING.
- S.P. — CEILING GRID START POINT.
- BATHFITTERS SHOWER ENCLOSURE CEILING INSERT
- WALL MOUNTED FLORESCENT LIGHT FIXTURE.
- CEILING MOUNTED LIGHT FIXTURE.
- EXHAUST DUCT GRILL
- ACCESS PANEL

NOTE:

1. BATHFITTERS INSTALLATION TO BE DONE LAST.

TectonArchitects | inc
1 Hartford Sq. West, Hartford CT 06106
860 548 0802
17 Railroad Avenue, Westerly RI 02891
401 596 7555
tectonarchitects.com

Notice:
This drawing is the property of Tecton Architects | inc The use, re-use or reproduction of this drawing for any purpose whatsoever without an expressed written agreement between Tecton Architects | inc and the user is prohibited. Rights to use the information on this sheet are not transferred until payment has been received for services rendered. Any rights so granted are non-transferable to other parties without the prior expressed written consent of Tecton Architects | inc

© 2012 Tecton Architects | inc

Consultant

Owner
THE UNIVERSITY OF RHODE ISLAND
THINK BIG WE DO

Project
University of Rhode Island
ALDRICH HALL
BATHROOM RENOVATIONS & DOOR & SIGNAGE REPLACEMENT
KINGSTON, RI

Key Plan

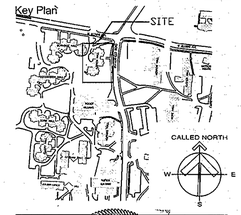

Seals

Issues

Date	Description
12/20/2012	FOR CONSTRUCTION

Revisions

No.	Date	Description
1	12/05/2012	REVIEW

Drawing Title

BATHROOM REFLECTED CEILING PLANS

Issue Date: 12/20/2012

Project No:	KC.R.ROGW.2010.001	Scale:	AS NOTED
Project Manager:	MT	Production Leader:	MS
Project Architect:	MT	Peer Reviewer:	JM

Drawing Number

A2.301

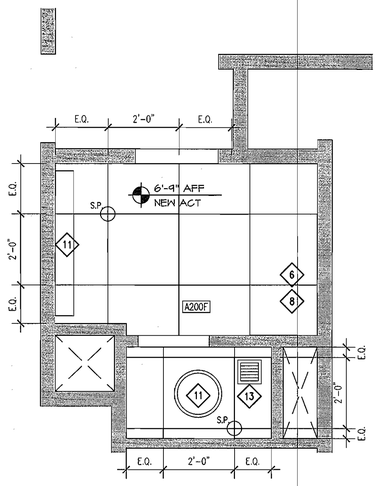

E10 BATHROOM REFLECTED CEILING PLAN - (A200F, A201E, B200F, B201E, C200E, C201G)
SCALE: 1/2" = 1'-0"
(TYPICAL @ 2ND, 3RD & 4TH FLOORS)

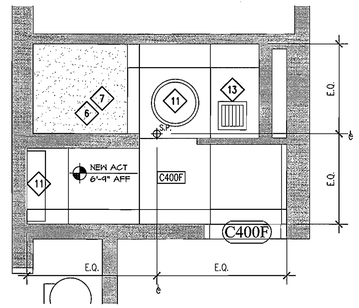

E5 BATHROOMREFLECTED CEILING PLAN - (B400F, B401F, C400E, C401F)
SCALE: 1/2" = 1'-0"

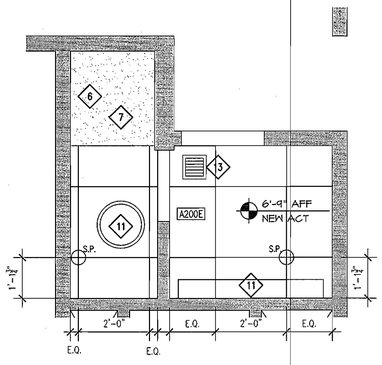

H10 BATHROOM REFLECTED CEILING PLAN - (A200E, B201F, C200F, C201F)
SCALE: 1/2" = 1'-0"
(TYPICAL @ 2ND, 3RD & 4TH FLOORS)

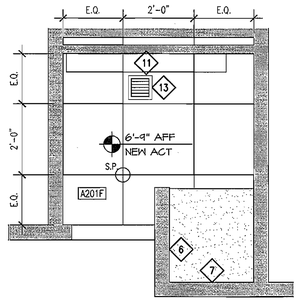

H7 BATHROOM REFLECTED CEILING PLAN (B200E, A201F)
SCALE: 1/2" = 1'-0"
(TYPICAL @ 2ND, 3RD & 4TH FLOORS)

CONSTRUCTION NOTES

1. PREPARE SUBFLOOR AND INSTALL NEW 2X2 CERAMIC TILE FLOORING & COVE.
2. INSTALL NEW SOLID SURFACE COUNTER, BACK SPLASH, SIDE SPLASH AND INTEGRAL SINKS. CONNECT TO EXISTING SUPPLY AND DRAIN.
2A. INSTALL NEW WALL MOUNTED SINK CONNECT TO EXISTING SUPPLY AND DRAIN.
3. INSTALL NEW FAUCETS AND VALVES.
4. INSTALL FIBER REINFORCED PANELS FLOOR TO UNDERSIDE OF DECK ON ALL BATHROOM WALLS (EXCEPT @ SHOWER & BATHTUB STALLS - SEE ALSO DETAIL B10/A2.201).
5. INSTALL NEW TOILET AND RECONNECT TO SUPPLY AND DRAIN
6. INSTALL NEW BATHFITTERS DRAIN, VALVE AND SHOWERHEAD. (WORK TO BE PERFORMED BY BATHFITTERS).
7. INSTALL NEW BATHFITTERS SHOWER ENCLOSURES INCLUDING SHOWER PAN, WALL INSERTS & CEILING. (WORK TO BE PERFORMED BY BATHFITTERS)
8. INSTALL NEW BATHFITTERS BATHTUB LINER & WALL INSERTS. (WORK TO BE PERFORMED BY BATHFITTERS)
9. INSTALL NEW DRAIN. (WORK TO BE PERFORMED BY BATHFITTERS)
10. INSTALL NEW STAINLESS STEEL ROBE HOOKS @ 6'-0" AFF. REFER TO INTERIOR ELEVATIONS - A5.201/A5.202 FOR LOCATIONS
11. PROVIDE AND INSTALL ONE WALL MOUNTED UP/DOWN FLUORESCENT LIGHT FIXTURE ABOVE SINK AND ONE CEILING MOUNTED LIGHT FIXTURE IN FRONT OF SHOWER (SEE REFLECTED CEILING PLAN). INSTALLATION INCLUDES WIREMOLD, WIRE AND SWITCH
12. FURNISH AND INSTALL ONE 16" DEEP HEAVY DUTY, PLASTIC COATED METAL WIRE SHELF SET 8" A.F.F.
13. REINSTALL EXHAUST GRILLE IN CEILING.
14. INSTALL NEW SHOWER ROD AND CURTAIN AT EXISTING HEIGHT.
15. INSTALL ACCESS PANELS. REPLACE DAMAGED UNITS. (CONTINGENCY ALLOWANCE)
16. INSTALL NEW DOOR AND TRANSOM AS PER SCHEDULE. PATCH AND REPAIR EXISTING DOOR FRAME AND PAINT.
17. 5" TILE BASE COVE ON ALL WALLS.
18. INSTALL NEW FLOOR DRAIN. COORDINATE SIZE AND LOCATION WITH P-DRAWINGS AND FINISHES.

TOILET ACCESSORIES

AC-1	TOILET PAPER HOLDER. TO BE PROVIDED BY OWNER AND INSTALLED BY CONTRACTOR.
AC-2	STAINLESS STEEL, SATIN FINISH SHOWER ROD & MOUNTING BRACKETS.
AC-3	SHOWER CURTAIN AND SHOWER CURTAIN RINGS
AC-4	NEW HEAVY DUTY METAL WIRE SHELF - MOUNTED 8" A.F.F.
AC-5	NEW STAINLESS STEEL ROBE HOOKS MTD. 6'-0" A.F.F.
AC-6	NEW FRAMELESS MIRROR - REFER TO INTERIOR ELEVATIONS - A5.201/5.202 FOR SIZING.
AC-7	8" DEEP SOLID SURFACE PLASTIC SHELF.

REFLECTED CEILING PLAN LEGEND

- 2'x2' A.C.T TILE CEILING.
- S.P. — CEILING GRID START POINT.
- BATHFITTERS SHOWER ENCLOSURE CEILING INSERT
- WALL MOUNTED FLORESCENT LIGHT FIXTURE.
- CEILING MOUNTED LIGHT FIXTURE.
- EXHAUST DUCT GRILL.
- ACCESS PANEL

NOTE:

1. BATHFITTERS INSTALLATION TO BE DONE LAST.

TectonArchitects | inc
1 Hartford Sq. West, Hartford CT 06106
860 548 0802
17 Railroad Avenue, Westerly RI 02891
401 596 7555
tectonarchitects.com

Notice:
This drawing is the property of Tecton Architects | Inc The use, re-use or reproduction of this drawing for any purpose whatsoever without an expressed written agreement between Tecton Architects | inc and the user is prohibited. Rights to use the information on this sheet are not transferred until payment has been received for services rendered. Any rights so granted are non-transferable to other parties without the prior expressed written consent of Tecton Architects | Inc

© 2012 Tecton Architects | Inc

Consultant

Owner
THE UNIVERSITY OF RHODE ISLAND
THINK BIG WE DO

Project
University of Rhode Island
ALDRICH HALL
BATHROOM RENOVATIONS & DOOR & SIGNAGE REPLACEMENT
KINGSTON, RI

Key Plan

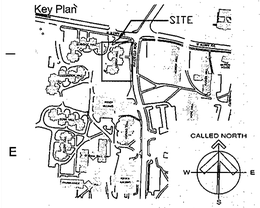

Seals

Issues

Date	Description
12/20/2012	FOR CONSTRUCTION

Revisions

No.	Date	Description
1	12/05/2012	REVIEW

Drawing Title
BATHROOM REFLFECTED CEILING PLANS

Issue Date:	12/20/2012		
Project No:	KC.R.ROGW.2010.001	Scale:	AS NOTED
Project Manager:	MT	Production Leader:	MS
Project Architect:	MT	Peer Reviewer:	JM

Drawing Number
A2.302

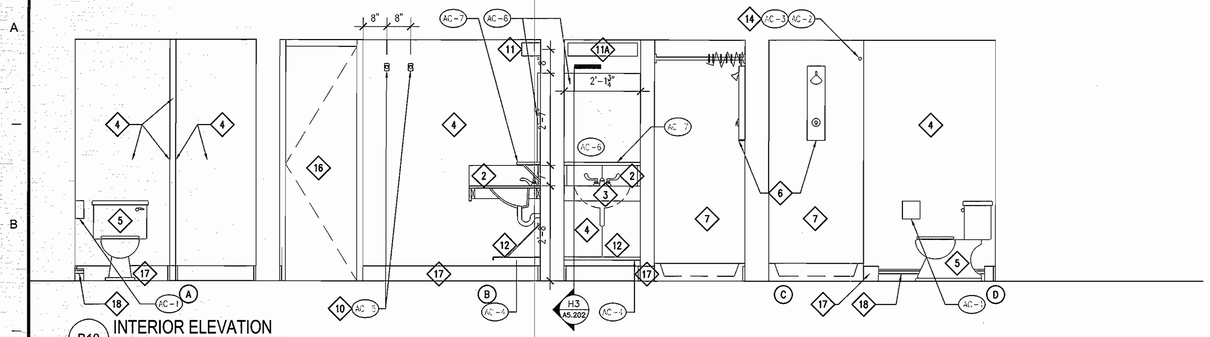

B10 INTERIOR ELEVATION
1/2"=1'-0"

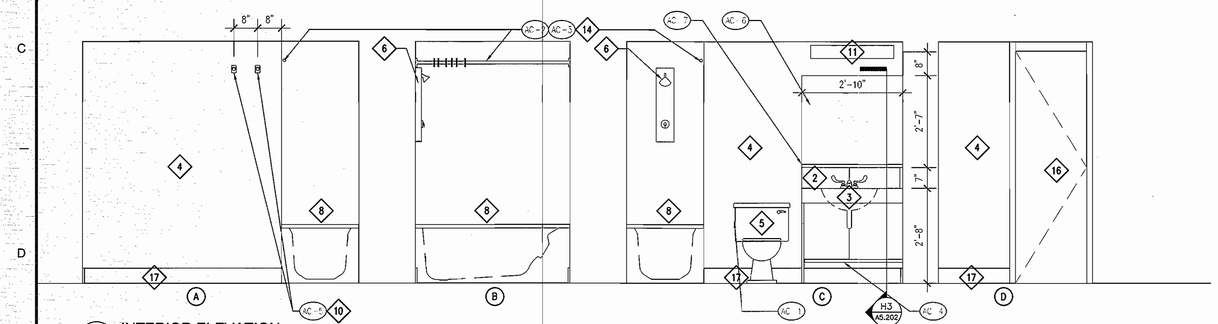

D10 INTERIOR ELEVATION
1/2"=1'-0"

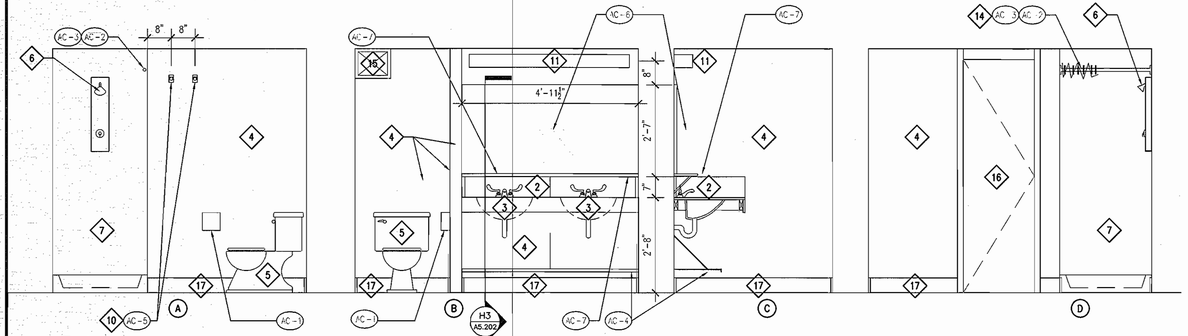

F10 INTERIOR ELEVATION
1/2"=1'-0"

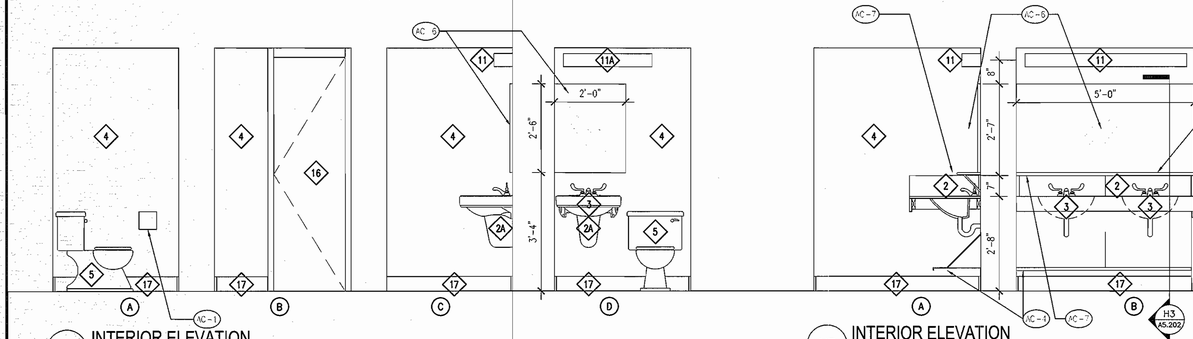

H10 INTERIOR ELEVATION
1/2"=1'-0"

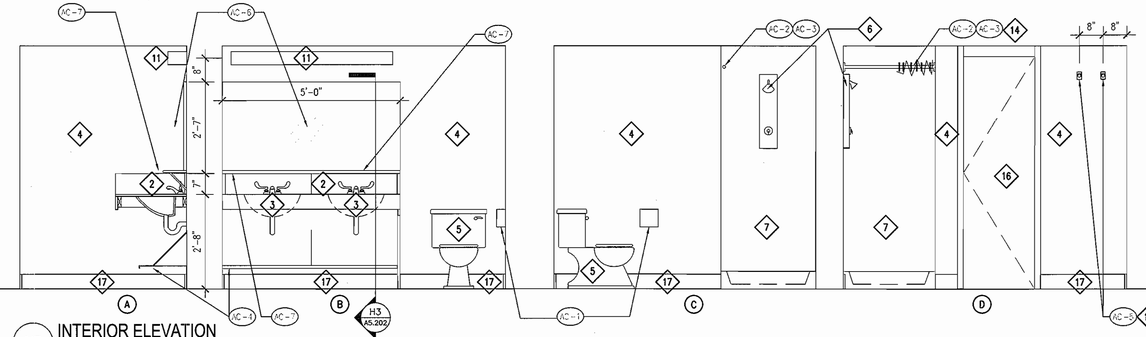

H7 INTERIOR ELEVATION
1/2"=1'-0"

CONSTRUCTION NOTES

1. PREPARE SUBFLOOR AND INSTALL NEW 2X2 CERAMIC TILE FLOORING & COVE.
2. INSTALL NEW SOLID SURFACE COUNTER, BACK SPLASH, SIDE SPLASH AND INTEGRAL SINKS. CONNECT TO EXISTING SUPPLY AND DRAIN.
2A. INSTALL NEW WALL MOUNTED SINK CONNECT TO EXISTING SUPPLY AND DRAIN.
3. INSTALL NEW FAUCETS AND VALVES.
4. INSTALL FIBER REINFORCED PANELS FLOOR TO CEILING ON ALL BATHROOM WALLS (EXCEPT @ SHOWER & BATHTUB STALLS – REFER TO DETAIL B10/A2.201).
5. INSTALL NEW TOILET AND RECONNECT TO SUPPLY AND DRAIN
6. INSTALL NEW BATHFITTERS DRAIN, VALVE AND SHOWERHEAD. (WORK TO BE PERFORMED BY BATHFITTERS).
7. INSTALL NEW BATHFITTERS SHOWER ENCLOSURES INCLUDING SHOWER PAN, WALL INSERTS & CEILING. (WORK TO BE PERFORMED BY BATHFITTERS)
8. INSTALL NEW BATHFITTERS BATHTUB LINER & WALL INSERTS. (WORK TO BE PERFORMED BY BATHFITTERS)
9. INSTALL NEW DRAIN. (WORK TO BE PERFORMED BY BATHFITTERS)
10. INSTALL NEW STAINLESS STEEL ROBE HOOKS @ 5'-0" AFF. REFER TO INTERIOR ELEVATIONS – A5.201/A5.202 FOR LOCATIONS
11. PROVIDE AND INSTALL ONE WALL MOUNTED UP/DOWN FLUORESCENT LIGHT FIXTURE ABOVE SINK AND ONE CEILING MOUNTED LIGHT FIXTURE IN FRONT OF SHOWER (SEE REFLECTED CEILING PLAN). INSTALLATION INCLUDES WIREMOLD, WIRE AND SWITCH.
11A. PROVIDE AND INSTALL ONE WALL MOUNTED UP/DOWN FLUORESCENT LIGHT FIXTURE ABOVE SINK (SEE REFLECTED CEILING PLAN). INSTALLATION INCLUDES WIREMOLD, WIRE AND SWITCH.
12. FURNISH AND INSTALL ONE 16" DEEP HEAVY DUTY, PLASTIC COATED METAL WIRE SHELF SET 8" A.F.F.
13. REINSTALL EXHAUST GRILLE IN CEILING.
14. INSTALL NEW SHOWER ROD AND CURTAIN AT EXISTING HEIGHT.
15. INSTALL ACCESS PANELS. REPLACE DAMAGED UNITS. (CONTINGENCY ALLOWANCE)
16. INSTALL NEW DOOR AND TRANSOM AS PER SCHEDULE. PATCH AND REPAIR EXISTING DOOR FRAME AND PAINT.
17. 5" BASE TILE COVE ON ALL WALLS.

TOILET ACCESSORIES

AC-1	TOILET PAPER HOLDER. TO BE PROVIDED BY OWNER AND INSTALLED BY CONTRACTOR.
AC-2	STAINLESS STEEL, SATIN FINISH SHOWER ROD & MOUNTING BRACKETS.
AC-3	SHOWER CURTAIN AND SHOWER CURTAIN RINGS
AC-4	NEW HEAVY DUTY METAL WIRE SHELF – MOUNTED 8" A.F.F.
AC-5	NEW STAINLESS STEEL ROBE HOOKS MTD. 6'-0" A.F.F.
AC-6	NEW FRAMELESS MIRROR – REFER TO INTERIOR ELEVATIONS – A5.201/5.202 FOR SIZING.
AC-7	8" DEEP SOLID SURFACE PLASTIC SHELF.

NOTE:

1. BATHFITTERS INSTALLATION TO BE DONE LAST.

TectonArchitects | inc
1 Hartford Sq. West, Hartford CT 06106
860 548 0802
17 Railroad Avenue, Westerly RI 02891
401 596 7565
tectonarchitects.com

Notice:
This drawing is the property of Tecton Architects | inc The use, re-use or reproduction of this drawing for any purpose whatsoever without an expressed written agreement between Tecton Architects | inc and the user is prohibited. Rights to use the information on this sheet are not transferred until payment has been received for services rendered. Any rights so granted are non-transferable to other parties without the prior expressed written consent of Tecton Architects | inc

© 2012 Tecton Architects | inc

Consultant

Owner
THE UNIVERSITY OF RHODE ISLAND
THINK BIG WE DO

Project
University of Rhode Island
ALDRICH HALL
BATHROOM RENOVATIONS & DOOR & SIGNAGE REPLACEMENT
KINGSTON, RI

Key Plan

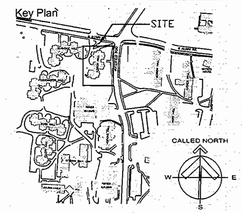

Seals

Issues

Date	Description
12/20/2012	FOR CONSTRUCTION

Revisions

No.	Date	Description
1	12/05/2012	REVIEW

Drawing Title
FIRST FLOOR BATHROOM INTERIOR ELEVATIONS

Issue Date: 12/20/2012

Project No:	KC.R.ROGW.2010.0001	Scale:	AS NOTED
Project Manager:	MT	Production Leader:	MS
Project Architect:	MT	Peer Reviewer:	JM

Drawing Number
A5.201

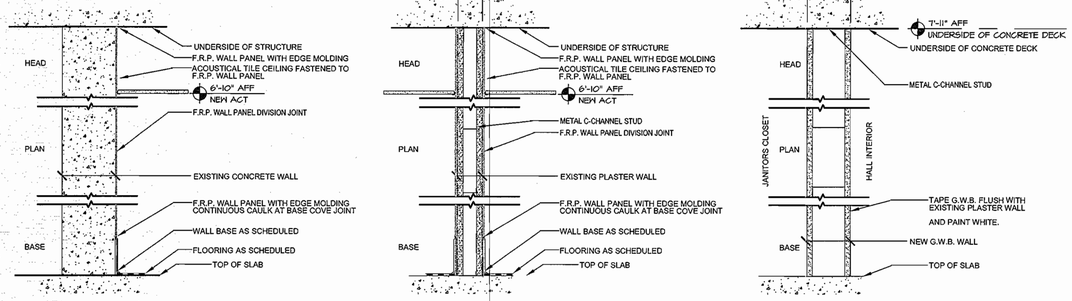

1 EXISTING 6" CONCRETE PARTITION

2 EXISTING PLASTER ON METAL LATH

3 NEW G.W.B. PARTITION ON MTL. STUD

C10 WALL TYPES
1-1/2"=1'-0"

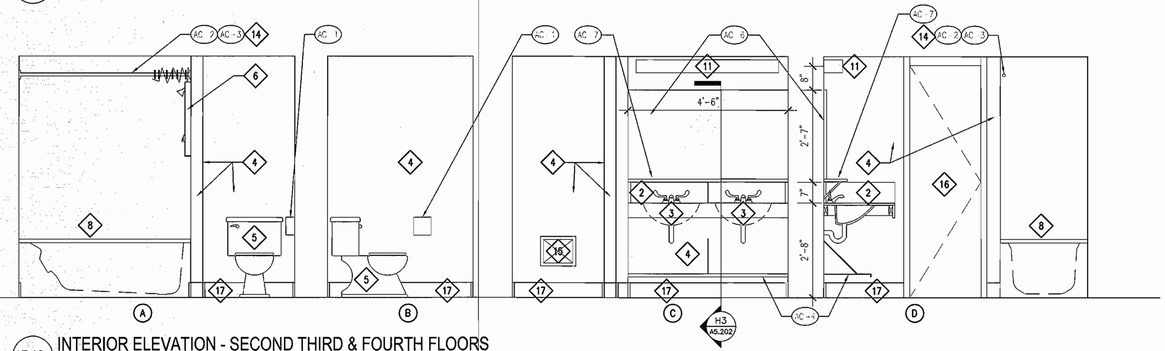

D10 INTERIOR ELEVATION - SECOND THIRD & FOURTH FLOORS
1/2"=1'-0"

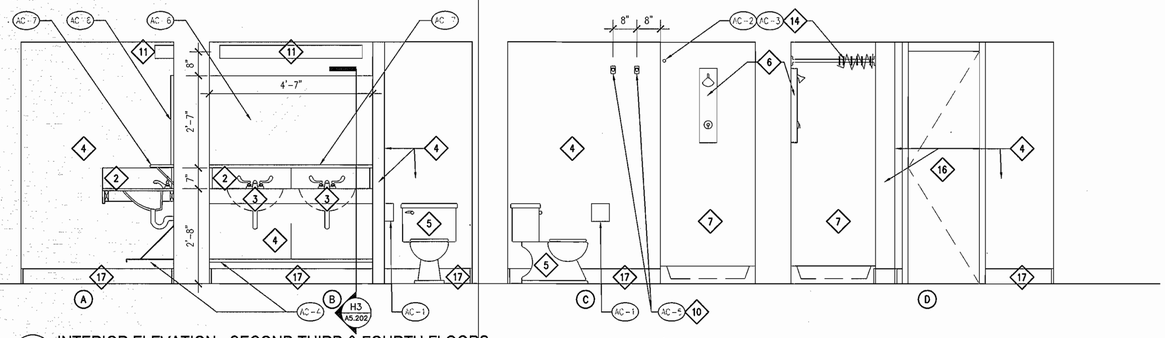

F10 INTERIOR ELEVATION - SECOND THIRD & FOURTH FLOORS
1/2"=1'-0"

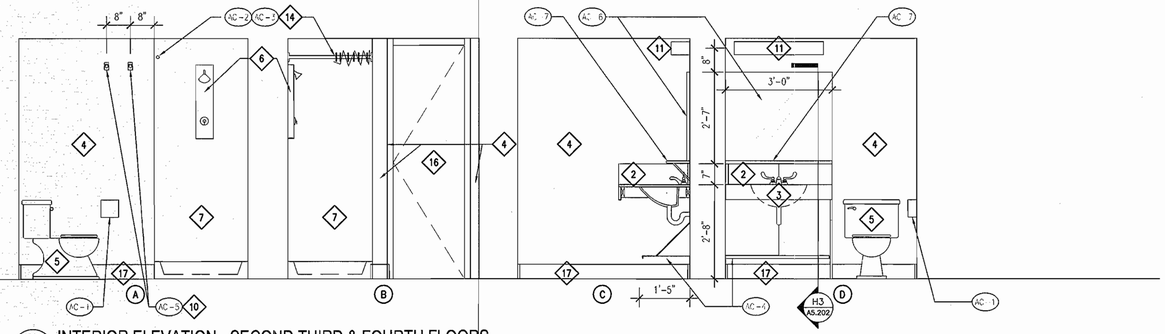

H10 INTERIOR ELEVATION - SECOND THIRD & FOURTH FLOORS
1/2"=1'-0"

FINISH LEGEND

- 2x2 MOSAIC FLOOR TILE – REFER TO SPECIFICATION
- CT-1 — 5" CERAMIC WALL TILE COVE BASE – REFER TO SPECIFICATION.
- F.R.P. — WALL COVERING – F.R.P. WALL PANEL ADHERED TO EXISTING WALL SURFACE TO BE INSTALLED ON ALL WALL SURFACE EXCEPT FOR WHERE BATHFITTERS TUB AND SHOWER ENCLOSURES ARE TO BE INSTALLED. – REFER TO SPECIFICATION & SEE ALSO DETAIL B10 /A2.201.
- ACT — FIBERGLASS ACOUSTICAL TILE CEILING – REFER TO SPECIFICATION.
- SS-1 — COUNTER TOP MATERIAL TO BE SOLID SURFACE – REFER TO SPECIFICATION.
- PT-1 — BONDO PATCH ANY DAMAGE TO EXISTING BATHROOM DOOR FRAMES, SAND SMOOTH AND PAINT – REFER TO SPECIFICATION.
- FLOOR DRAIN. SEE "P" DRAWINGS.

GENERAL FINISH NOTES

1. FINISH PLAN IS FOR REFERENCE & TO BE APPLICABLE AT ALL BATHROOMS.
2. COORDINATE ALL FINISHES WITH SPECIFICATIONS.

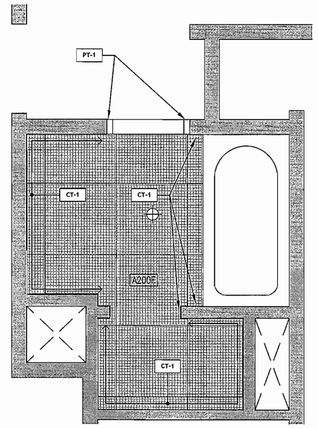

E5 TYPICAL FINISH FLOOR PLAN
1/2"=1'-0"

CONSTRUCTION NOTES

1. PREPARE SUBFLOOR AND INSTALL NEW 2X2 CERAMIC TILE FLOORING & COVE.
2. INSTALL NEW SOLID SURFACE COUNTER, BACK SPLASH, SIDE SPLASH AND INTEGRAL SINKS. CONNECT TO EXISTING SUPPLY AND DRAIN.
2A. INSTALL NEW WALL MOUNTED SINK CONNECT TO EXISTING SUPPLY AND DRAIN.
3. INSTALL NEW FAUCETS AND VALVES.
4. INSTALL FIBER REINFORCED PANELS FLOOR TO CEILING ON ALL BATHROOM WALLS (EXCEPT @ SHOWER & BATHTUB STALLS – REFER TO DETAIL B10/A2.201).
5. INSTALL NEW TOILET AND RECONNECT TO SUPPLY AND DRAIN
6. INSTALL NEW BATHFITTERS DRAIN, VALVE AND SHOWERHEAD. (WORK TO BE PERFORMED BY BATHFITTERS).
7. INSTALL NEW BATHFITTERS SHOWER ENCLOSURES INCLUDING SHOWER PAN, WALL INSERTS & CEILING. (WORK TO BE PERFORMED BY BATHFITTERS)
8. INSTALL NEW BATHFITTERS BATHTUB LINER & WALL INSERTS. (WORK TO BE PERFORMED BY BATHFITTERS)
9. INSTALL NEW DRAIN. (WORK TO BE PERFORMED BY BATHFITTERS)
10. INSTALL NEW STAINLESS STEEL ROBE HOOKS @ 6'-0" AFF. REFER TO INTERIOR ELEVATIONS – A5.201/A5.202 FOR LOCATIONS
11. PROVIDE AND INSTALL ONE WALL MOUNTED UP/DOWN FLUORESCENT LIGHT FIXTURE ABOVE SINK AND ONE CEILING MOUNTED LIGHT FIXTURE IN FRONT OF SHOWER (SEE REFLECTED CEILING PLAN). INSTALLATION INCLUDES WIREMOLD, WIRE AND SWITCH.
11A. PROVIDE AND INSTALL ONE WALL MOUNTED UP/DOWN FLUORESCENT LIGHT FIXTURE ABOVE SINK (SEE REFLECTED CEILING PLAN). INSTALLATION INCLUDES WIREMOLD, WIRE AND SWITCH.
12. FURNISH AND INSTALL ONE 16" DEEP HEAVY DUTY, PLASTIC COATED METAL WIRE SHELF SET 8" A.F.F.
13. REINSTALL EXHAUST GRILLE IN CEILING.
14. INSTALL NEW SHOWER ROD AND CURTAIN AT EXISTING HEIGHT.
15. INSTALL ACCESS PANELS. REPLACE DAMAGED UNITS. (CONTINGENCY ALLOWANCE)
16. INSTALL NEW DOOR AND TRANSOM AS PER SCHEDULE. PATCH AND REPAIR EXISTING DOOR FRAME AND PAINT.
17. 5" BASE TILE COVE ON ALL WALLS.

TOILET ACCESSORIES

- AC-1 TOILET PAPER HOLDER. TO BE PROVIDED BY OWNER AND INSTALLED BY CONTRACTOR.
- AC-2 STAINLESS STEEL, SATIN FINISH SHOWER ROD & MOUNTING BRACKETS.
- AC-3 SHOWER CURTAIN AND SHOWER CURTAIN RINGS
- AC-4 NEW HEAVY DUTY METAL WIRE SHELF – MOUNTED 8" A.F.F.
- AC-5 NEW STAINLESS STEEL ROBE HOOKS MTD. 6'-0" A.F.F.
- AC-6 NEW FRAMELESS MIRROR – REFER TO INTERIOR ELEVATIONS – A5.201/5.202 FOR SIZING.
- AC-7 8" DEEP SOLID SURFACE PLASTIC SHELF.

NOTE:

1. BATHFITTERS INSTALLATION TO BE DONE LAST.

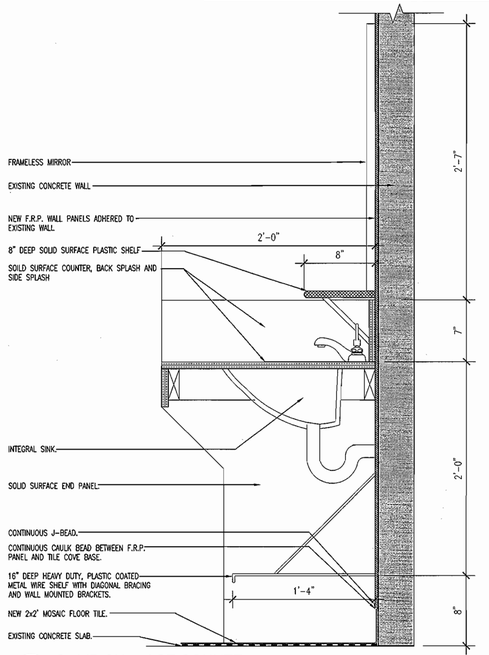

H3 SOLID SURFACE COUNTER
1-1/2"=1'-0"

TectonArchitects | inc
1 Hartford Sq. West, Hartford CT 06106
860 548 0802
17 Railroad Avenue, Westerly RI 02891
401 596 7555
tectonarchitects.com

Notice:
This drawing is the property of Tecton Architects | inc The use, re-use or reproduction of this drawing for any purpose whatsoever without an expressed written agreement between Tecton Architects | inc and the user is prohibited. Rights to use the information on this sheet are not transferred until payment has been received for services rendered. Any rights so granted are non-transferable to other parties without the prior expressed written consent of Tecton Architects | inc
© 2012 Tecton Architects | inc

Consultant

Owner
THE UNIVERSITY OF RHODE ISLAND
THINK BIG WE DO

Project
University of Rhode Island
ALDRICH HALL
BATHROOM RENOVATIONS & DOOR & SIGNAGE REPLACEMENT
KINGSTON, RI

Key Plan

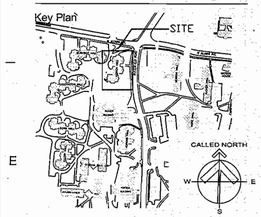

Seals

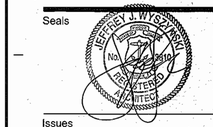

Issues

Date	Description
12/20/2012	FOR CONSTRUCTION

Revisions

No.	Date	Description
1	12/05/2012	REVIEW

Drawing Title
UPPER FLOOR BATHROOM INTERIOR ELEVATIONS

Issue Date:	12/20/2012
Project No: KC.R.ROGW.2010.001	Scale: AS NOTED
Project Manager: MT	Production Leader: MS
Project Architect: MT	Peer Reviewer: JM

Drawing Number
A5.202

BASEMENT DOOR, FRAME & SIGNAGE SCHEDULE

NUMBER	SIZE	DOOR ELEV.	DOOR MAT'L	DOOR THK.	DOOR FINISH	FRAME MAT'L	FRAME THK.	FRAME FINISH	FRAME ELEV.	TRANSOM	DOOR RATING	HDWR.	SIGN TYPE	SIGN RM#	TRANSOM HT. (TOP OF DOOR TO TOP OF FRAME) REMARKS
A001A	EXISTING TO REMAIN	EXIST.	EXIST.	EXIST.	EXIST.	EXIST.	EXIST.	EXIST.	EXIST.		EXIST.	EXIST.	H3/F8/C9		
A001B	EXISTING TO REMAIN	EXIST.	EXIST.	EXIST.	EXIST.	EXIST.	EXIST.	EXIST.	EXIST.		EXIST.	EXIST.	C7	A001B	
B001A	EXISTING TO REMAIN	EXIST.	EXIST.	EXIST.	EXIST.	EXIST.	EXIST.	EXIST.	EXIST.		EXIST.	EXIST.	H3/F8/C9		
B001B	EXISTING TO REMAIN	EXIST.	EXIST.	EXIST.	EXIST.	EXIST.	EXIST.	EXIST.	EXIST.		EXIST.	EXIST.	H3/F8/C9		
B001C	EXISTING TO REMAIN	EXIST.	EXIST.	EXIST.	EXIST.	EXIST.	EXIST.	EXIST.	EXIST.		EXIST.	EXIST.	C7	B001C	
B002	EXISTING TO REMAIN	EXIST.	EXIST.	EXIST.	EXIST.	EXIST.	EXIST.	EXIST.	EXIST.		EXIST.	EXIST.	C7	B002	
C001	EXISTING TO REMAIN	EXIST.	EXIST.	EXIST.	EXIST.	EXIST.	EXIST.	EXIST.	EXIST.		EXIST.	EXIST.	H3/F8/C9		
C002	EXISTING TO REMAIN	EXIST.	EXIST.	EXIST.	EXIST.	EXIST.	EXIST.	EXIST.	EXIST.		EXIST.	EXIST.	H3/F8/C9		
C003	EXISTING TO REMAIN	EXIST.	EXIST.	EXIST.	EXIST.	EXIST.	EXIST.	EXIST.	EXIST.		EXIST.	EXIST.	C7	C003	
C004	EXISTING TO REMAIN	EXIST.	EXIST.	EXIST.	EXIST.	EXIST.	EXIST.	EXIST.	EXIST.		EXIST.	EXIST.	C7	C004	
C005	EXISTING TO REMAIN	EXIST.	EXIST.	EXIST.	EXIST.	EXIST.	EXIST.	EXIST.	EXIST.		EXIST.	EXIST.	C7	C005	
C006	EXISTING TO REMAIN	EXIST.	EXIST.	EXIST.	EXIST.	EXIST.	EXIST.	EXIST.	EXIST.		EXIST.	EXIST.	C7	C006	
C007A	EXISTING TO REMAIN	EXIST.	EXIST.	EXIST.	EXIST.	EXIST.	EXIST.	EXIST.	EXIST.		EXIST.	EXIST.	C7	C007	
C007B	EXISTING TO REMAIN	EXIST.	EXIST.	EXIST.	EXIST.	EXIST.	EXIST.	EXIST.	EXIST.		EXIST.	EXIST.	C10		

FIRST FLOOR DOOR, FRAME & SIGNAGE SCHEDULE

NOTE: PRIOR TO ORDERING OF ANY UNITS ALL DIMENSIONS SHALL BE FIELD VERIFIED

NUMBER	SIZE	DOOR ELEV.	DOOR MTL.	DOOR THK.	DOOR FINISH	FRAME MT.	FRAME THK.	FRAME FINISH	FRAME ELEV.	TRANSOM	DOOR RATING	HDWR.	SIGN TYPE	SIGN RM#	TRANSOM HT. (TOP OF DOOR TO TOP OF FRAME) REMARKS
A100	2'-4" x 6'-8"	A	WD.	1-3/4"	TRANS.	EXIST.	EXIST.	EXIST.	A		20 MIN	1	C3/F8	A100A	1'-3"
A100A	2'-4" x 7'-11"	A	WD.	1-3/4"	TRANS.	EXIST.	EXIST.	EXIST.	A		20 MIN	5			
A100B	2'-4" x 7'-11"	A	WD.	1-3/4"	TRANS.	EXIST.	EXIST.	EXIST.	A		20 MIN	1	C3/F8	A100B	
A100C	2'-4" x 7'-11"	A	WD.	1-3/4"	TRANS.	EXIST.	EXIST.	EXIST.	A		20 MIN	1	C3/F8	A100C	
A100D	2'-4" x 7'-11"	A	WD.	1-3/4"	TRANS.	EXIST.	EXIST.	EXIST.	A		20 MIN	1	C3/F8	A100D	
A100E	2'-4" x 7'-11"	A	WD.	1-3/4"	TRANS.	EXIST.	EXIST.	EXIST.	A		20 MIN	1	C3/F8	A100E	
A100F	2'-0" x 6'-8"	B	WD.	1-3/4"	TRANS.	EXIST.	EXIST.	EXIST.	A		20 MIN	3	C10		1'-3"
A101	3'-6" x 7'-0"	C	H.M.	1-3/4"	PT.	EXIST.	EXIST.	EXIST.	A		20 MIN	7			
A101A	3'-0" x 6'-8"	B	H.M.	1-3/4"	PT.	EXIST.	EXIST.	EXIST.	A		90 MIN	6	C5	A105	
A101B	3'-0" x 6'-8"	B	H.M.	1-3/4"	PT.	EXIST.	EXIST.	EXIST.	A		90 MIN	6	C5	A104	
A102	2'-0" x 6'-8"	B	WD.	1-3/4"	TRANS.	EXIST.	EXIST.	EXIST.	A		20 MIN	2	C10		
A103	2'-0" x 6'-8"	B	WD.	1-3/4"	TRANS.	EXIST.	EXIST.	EXIST.	A		20 MIN	4	C7	A103	
A104	3'-0" x 6'-8"	B	H.M.	1-3/4"	PT.	EXIST.	EXIST.	EXIST.	A		20 MIN	6	C5	A104A	
A106	EXISTING TO REMAIN	EXIST.	EXIST.	EXIST.	EXIST.	EXIST.	EXIST.	EXIST.	EXIST.		EXIST.	EXIST.	C7	A106	
A106A	2'-4" x 6'-8"	EXIST.	EXIST.	EXIST.	EXIST.	EXIST.	EXIST.	EXIST.	EXIST.		EXIST.	EXIST.			EXISTING TO BE REMOVED AND INFILLED
A107	2'-0" x 6'-8"	B	WD.	1-3/4"	TRANS.	EXIST.	EXIST.	EXIST.	A		20 MIN	3	C7	A107	1'-3"
A108A	3'-0" x 6'-8"	B	H.M.	1-3/4"	PT.	EXIST.	EXIST.	EXIST.	A		90 MIN	6	H3/F8/C9		
A108B	EXISTING TO REMAIN	EXIST.	EXIST.	EXIST.	EXIST.	EXIST.	EXIST.	EXIST.	EXIST.		EXIST.	EXIST.	H3/F8/C9		
A112	2'-8 x 6'-8"	B	WD.	1-3/4"	TRANS.	EXIST.	EXIST.	EXIST.	A		20 MIN	4	C5	A112	
B100	2'-4" x 6'-8"	A	WD.	1-3/4"	TRANS.	EXIST.	EXIST.	EXIST.	A		20 MIN	1	C3/F8	B100	
B100A	2'-4" x 6'-8"	A	WD.	1-3/4"	TRANS.	EXIST.	EXIST.	EXIST.	A		20 MIN	5			1'-3"
B100B	2'-4" x 6'-8"	A	WD.	1-3/4"	TRANS.	EXIST.	EXIST.	EXIST.	A		20 MIN	5			1'-3"
B100C	2'-4" x 6'-8"	A	WD.	1-3/4"	TRANS.	EXIST.	EXIST.	EXIST.	A		20 MIN	5	C10		1'-3"
B100D	2'-4" x 6'-8"	A	WD.	1-3/4"	TRANS.	EXIST.	EXIST.	EXIST.	A		20 MIN	5			1'-3"
B100E	3'-0" x 6'-8"	C	H.M.	1-3/4"	PT.	EXIST.	EXIST.	EXIST.	A		20 MIN	7			1'-3"
B110	3'-6" x 7'-0"	C	H.M.	1-3/4"	PT.	EXIST.	EXIST.	EXIST.	A		20 MIN	7			
B110A	3'-0" x 6'-8"	B	H.M.	1-3/4"	PT.	EXIST.	EXIST.	EXIST.	A		90 MIN	6	C5	B114	
B110B	3'-0" x 6'-8"	B	H.M.	1-3/4"	PT.	EXIST.	EXIST.	EXIST.	A		90 MIN	6	C5	B113	
B111	2'-0" x 6'-8"	B	WD.	1-3/4"	TRANS.	EXIST.	EXIST.	EXIST.	A		20 MIN	2	C10		
B112	2'-0" x 6'-8"	B	WD.	1-3/4"	TRANS.	EXIST.	EXIST.	EXIST.	A		20 MIN	3	C7	A103	
B114	EXISTING TO REMAIN	EXIST.	EXIST.	EXIST.	EXIST.	EXIST.	EXIST.	EXIST.	EXIST.		EXIST.	EXIST.			
B115	3'-0" x 6'-8"	B	WD.	1-3/4"	TRANS.	EXIST.	EXIST.	EXIST.	A		20 MIN	3	C7	B115	
B119	EXISTING TO REMAIN	EXIST.	EXIST.	EXIST.	EXIST.	EXIST.	EXIST.	EXIST.	EXIST.		EXIST.	EXIST.	C7	B119	
B121	2'-4" x 6'-8"	B	WD.	1-3/4"	TRANS.	EXIST.	EXIST.	EXIST.	A		20 MIN	4	C5	B121	
B122A	3'-0" x 6'-8"	B	H.M.	1-3/4"	PT.	EXIST.	EXIST.	EXIST.	A		90 MIN	6	H3/F8/C9		
B122B	EXISTING TO REMAIN	EXIST.	EXIST.	EXIST.	EXIST.	EXIST.	EXIST.	EXIST.	EXIST.		EXIST.	EXIST.	H3/F8/C9		
B123	2'-0" x 6'-8"	B	WD.	1-3/4"	TRANS.	EXIST.	EXIST.	EXIST.	A		20 MIN	3	C7	B123	1'-3"
B124	3'-8" x 6'-8"	B	WD.	1-3/4"	TRANS.	EXIST.	EXIST.	EXIST.	A		20 MIN	4	C5	B124	
C100	2'-4" x 6'-8"	A	WD.	1-3/4"	TRANS.	EXIST.	EXIST.	EXIST.	A		20 MIN	1	C3/F8	C100E	1'-3"
C100A	2'-4" x 7'-11"	A	WD.	1-3/4"	TRANS.	EXIST.	EXIST.	EXIST.	A		20 MIN	1	C3/F8	C100A	
C100B	2'-4" x 7'-11"	A	WD.	1-3/4"	TRANS.	EXIST.	EXIST.	EXIST.	A		20 MIN	1	C3/F8	C100B	
C100C	2'-4" x 7'-11"	A	WD.	1-3/4"	TRANS.	EXIST.	EXIST.	EXIST.	A		20 MIN	1	C3/F8	C100C	
C100D	2'-4" x 7'-11"	A	WD.	1-3/4"	TRANS.	EXIST.	EXIST.	EXIST.	A		20 MIN	1	C3/F8	C100D	
C100E	2'-4" x 7'-11"	A	WD.	1-3/4"	TRANS.	EXIST.	EXIST.	EXIST.	A		20 MIN	5			
C100F	2'-0" x 6'-8"	B	WD.	1-3/4"	TRANS.	EXIST.	EXIST.	EXIST.	A		20 MIN	2	C10		1'-3"
C100G	2'-6" x 6'-8"	B	WD.	1-3/4"	TRANS.	EXIST.	EXIST.	EXIST.	A		20 MIN	3	C7	C100G	1'-3"
C101A	3'-0" x 6'-8"	B	H.M.	1-3/4"	PT.	EXIST.	EXIST.	EXIST.	A		90 MIN	6	H3/F8/C9		
C101B	EXISTING TO REMAIN	EXIST.	EXIST.	EXIST.	EXIST.	EXIST.	EXIST.	EXIST.	EXIST.		EXIST.	EXIST.	H3/F8/C9		
C124	3'-6" x 7'-0"	C	H.M.	1-3/4"	PT.	EXIST.	EXIST.	EXIST.	A		20 MIN	7			
C124A	3'-0" x 6'-8"	B	H.M.	1-3/4"	PT.	EXIST.	EXIST.	EXIST.	A		90 MIN	8	C5	C128	
C124B	3'-0" x 6'-8"	B	H.M.	1-3/4"	PT.	EXIST.	EXIST.	EXIST.	A		90 MIN	6	C5	B114	
C125	2'-0" x 6'-8"	B	WD.	1-3/4"	TRANS.	EXIST.	EXIST.	EXIST.	A		20 MIN	4	C7	C125	
C126	2'-0" x 6'-8"	B	WD.	1-3/4"	TRANS.	EXIST.	EXIST.	EXIST.	A		20 MIN	2	C10		
C129	2'-4" x 7'-11"	B	WD.	1-3/4"	TRANS.	EXIST.	EXIST.	EXIST.	A		20 MIN	4	C5	C129	
C134	EXISTING TO REMAIN	EXIST.	EXIST.	EXIST.	EXIST.	EXIST.	EXIST.	EXIST.	EXIST.		EXIST.	EXIST.	C7	C134	
C135	2'-0" x 6'-8"	B	WD.	1-3/4"	TRANS.	EXIST.	EXIST.	EXIST.	A		20 MIN	3	C7	C135	1'-3"

SECOND FLOOR DOOR, FRAME & SIGNAGE SCHEDULE

NOTE: PRIOR TO ORDERING OF ANY UNITS ALL DIMENSIONS SHALL BE FIELD VERIFIED

ALTERNATE	NUMBER	SIZE	DOOR ELEV.	DOOR MTL.	DOOR THK.	DOOR FINISH	FRAME MT.	FRAME THK.	FRAME FINISH	FRAME ELEV.	TRANSOM	DOOR RATING	HDWR.	SIGN TYPE	SIGN RM#	TRANSOM HT. (TOP OF DOOR TO TOP OF FRAME) REMARKS
	A200A	2'-4" x 7'-5 1/2"	A	WD.	1-3/4"	TRANS.	EXIST.	EXIST.	EXIST.	A		20 MIN	1	C3/F8	A200A	
	A200B	2'-4" x 7'-5 1/2"	A	WD.	1-3/4"	TRANS.	EXIST.	EXIST.	EXIST.	A		20 MIN	1	C3/F8	A200B	
	A200C	2'-4" x 7'-5 1/2"	A	WD.	1-3/4"	TRANS.	EXIST.	EXIST.	EXIST.	A		20 MIN	1	C3/F8	A200C	
	A200D	2'-4" x 7'-5 1/2"	A	WD.	1-3/4"	TRANS.	EXIST.	EXIST.	EXIST.	A		20 MIN	1	C3/F8	A200D	
	A200E	2'-0" x 6'-8"	B	WD.	1-3/4"	TRANS.	EXIST.	EXIST.	EXIST.	A		20 MIN	2	C10		9 1/2"
	A200F	2'-0" x 6'-8"	B	WD.	1-3/4"	TRANS.	EXIST.	EXIST.	EXIST.	A		20 MIN	2	C10		9 1/2"
	A201A	2'-4" x 7'-5 1/2"	A	WD.	1-3/4"	TRANS.	EXIST.	EXIST.	EXIST.	A		20 MIN	1	C3/F8	A201A	
	A201B	2'-4" x 7'-5 1/2"	A	WD.	1-3/4"	TRANS.	EXIST.	EXIST.	EXIST.	A		20 MIN	1	C3/F8	A201B	
	A201C	2'-4" x 7'-5 1/2"	A	WD.	1-3/4"	TRANS.	EXIST.	EXIST.	EXIST.	A		20 MIN	1	C3/F8	A201C	
	A201D	2'-4" x 6'-8"	A	WD.	1-3/4"	TRANS.	EXIST.	EXIST.	EXIST.	A		20 MIN	1	C3/F8	A201D	
	A201E	2'-0" x 6'-8"	A	WD.	1-3/4"	TRANS.	EXIST.	EXIST.	EXIST.	A		20 MIN	2	C10		9 1/2"
	A201F	2'-0" x 6'-8"	B	WD.	1-3/4"	TRANS.	EXIST.	EXIST.	EXIST.	A		20 MIN	2	C10		9 1/2"

NOTE: ALL GREY BOXES SHALL INDICATE A DOOR THAT IS ASSOCIATED WITH ALTERNATE #2

SECOND FLOOR DOOR, FRAME & SIGNAGE SCHEDULE CONT.

NOTE: PRIOR TO ORDERING OF ANY UNITS ALL DIMENSIONS SHALL BE FIELD VERIFIED

ALTERNATE	NUMBER	SIZE	DOOR ELEV.	DOOR MTL.	DOOR THK.	DOOR FINISH	FRAME MT.	FRAME THK.	FRAME FINISH	FRAME ELEV.	TRANSOM	DOOR RATING	HDWR.	SIGN TYPE	SIGN RM#	TRANSOM HT. (TOP OF DOOR TO TOP OF FRAME) REMARKS
	A202A	EXISTING TO REMAIN	EXIST.	EXIST.	EXIST.	EXIST.	EXIST.	EXIST.	EXIST.	EXIST.		EXIST.	EXIST.	H3/F8/C9		DOORS TO STAIRS PREVIOUSLY REPLACED
	A202B	EXISTING TO REMAIN	EXIST.	EXIST.	EXIST.	EXIST.	EXIST.	EXIST.	EXIST.	EXIST.		EXIST.	EXIST.	H3/F8/C9		DOORS TO STAIRS PREVIOUSLY REPLACED
	A202C	2'-0" x 6'-8"	B	WD.	1-3/4"	TRANS.	EXIST.	EXIST.	EXIST.	A		20 MIN	3	C7	A202A	9 1/2"
	A202D	2'-0" x 6'-8"	B	WD.	1-3/4"	TRANS.	EXIST.	EXIST.	EXIST.	A		20 MIN	3	C7	A202B	9 1/2"
	B200A	2'-4" x 7'-0 1/2"	A	WD.	1-3/4"	TRANS.	EXIST.	EXIST.	EXIST.	A		20 MIN	1	C3/F8	B200A	
	B200B	2'-4" x 7'-0 1/2"	A	WD.	1-3/4"	TRANS.	EXIST.	EXIST.	EXIST.	A		20 MIN	1	C3/F8	B200B	
	B200C	2'-4" x 7'-0 1/2"	A	WD.	1-3/4"	TRANS.	EXIST.	EXIST.	EXIST.	A		20 MIN	1	C3/F8	B200C	
	B200D	2'-4" x 7'-0 1/2"	A	WD.	1-3/4"	TRANS.	EXIST.	EXIST.	EXIST.	A		20 MIN	1	C3/F8	B200D	
	B200E	2'-0" x 6'-8"	B	H.M.	1-3/4"	TRANS.	EXIST.	EXIST.	EXIST.	A		20 MIN	2	C10		9 1/2"
	B200F	2'-0" x 6'-8"	B	WD.	1-3/4"	TRANS.	EXIST.	EXIST.	EXIST.	A		20 MIN	2	C10		9 1/2"
	B201A	2'-4" x 7'-5 1/2"	A	WD.	1-3/4"	TRANS.	EXIST.	EXIST.	EXIST.	A		20 MIN	1	C3/F8	B201A	
	B201B	2'-4" x 7'-0 1/2"	A	WD.	1-3/4"	TRANS.	EXIST.	EXIST.	EXIST.	A		20 MIN	1	C3/F8	B201B	
	B201C	2'-4" x 7'-5 1/2"	A	WD.	1-3/4"	TRANS.	EXIST.	EXIST.	EXIST.	A		20 MIN	1	C3/F8	B201C	
	B201D	2'-4" x 7'-5 1/2"	A	WD.	1-3/4"	TRANS.	EXIST.	EXIST.	EXIST.	A		20 MIN	1	C3/F8	B201D	
	B201E	2'-0" x 6'-8"	B	WD.	1-3/4"	TRANS.	EXIST.	EXIST.	EXIST.	A		20 MIN	2	C10		9 1/2"
	B201F	2'-0" x 6'-8"	B	WD.	1-3/4"	TRANS.	EXIST.	EXIST.	EXIST.	A		20 MIN	2	C10		9 1/2"
	B202A	EXISTING TO REMAIN	EXIST.	EXIST.	EXIST.	EXIST.	EXIST.	EXIST.	EXIST.	EXIST.		EXIST.	EXIST.	H3/F8/C9		DOORS TO STAIRS PREVIOUSLY REPLACED
	B202B	EXISTING TO REMAIN	EXIST.	EXIST.	EXIST.	EXIST.	EXIST.	EXIST.	EXIST.	EXIST.		EXIST.	EXIST.	H3/F8/C9		DOORS TO STAIRS PREVIOUSLY REPLACED
	B202C	2'-0" x 6'-8"	B	WD.	1-3/4"	TRANS.	EXIST.	EXIST.	EXIST.	A		20 MIN	3	C7	C202A	9 1/2"
	B202D	2'-0" x 6'-8"	B	WD.	1-3/4"	TRANS.	EXIST.	EXIST.	EXIST.	A		20 MIN	3	C7	C202B	9 1/2"
	C200A	2'-4" x 7'-5 1/2"	A	WD.	1-3/4"	TRANS.	EXIST.	EXIST.	EXIST.	A		20 MIN	1	C3/F8	C200A	
	C200B	2'-4" x 7'-5 1/2"	A	WD.	1-3/4"	TRANS.	EXIST.	EXIST.	EXIST.	A		20 MIN	1	C3/F8	C200B	
	C200C	2'-4" x 7'-5 1/2"	A	WD.	1-3/4"	TRANS.	EXIST.	EXIST.	EXIST.	A		20 MIN	1	C3/F8	C200C	
	C200D	2'-4" x 7'-5 1/2"	A	WD.	1-3/4"	TRANS.	EXIST.	EXIST.	EXIST.	A		20 MIN	1	C3/F8	C200D	
	C200E	2'-0" x 6'-8"	B	WD.	1-3/4"	TRANS.	EXIST.	EXIST.	EXIST.	A		20 MIN	2	C10		9 1/2"
	C200F	2'-0" x 6'-8"	B	WD.	1-3/4"	TRANS.	EXIST.	EXIST.	EXIST.	A		20 MIN	2	C10		9 1/2"
	C201A	2'-4" x 7'-5 1/2"	A	WD.	1-3/4"	TRANS.	EXIST.	EXIST.	EXIST.	A		20 MIN	1	C3/F8	C201A	
	C201B	2'-4" x 7'-5 1/2"	A	WD.	1-3/4"	TRANS.	EXIST.	EXIST.	EXIST.	A		20 MIN	1	C3/F8	C201B	
	C201C	2'-4" x 7'-5 1/2"	A	WD.	1-3/4"	TRANS.	EXIST.	EXIST.	EXIST.	A		20 MIN	1	C3/F8	C201C	
	C201D	2'-4" x 7'-5 1/2"	A	WD.	1-3/4"	TRANS.	EXIST.	EXIST.	EXIST.	A		20 MIN	1	C3/F8	C201D	
	C201E	3'-0" x 7'-0"	B	H.M.	1-3/4"	PT.	EXIST.	EXIST.	EXIST.	A		20 MIN	1	C3/F8	C201E	
	C201F	2'-0" x 6'-8"	B	WD.	1-3/4"	TRANS.	EXIST.	EXIST.	EXIST.	A		20 MIN	2	C10		9 1/2"
	C201G	2'-0" x 6'-8"	B	WD.	1-3/4"	TRANS.	EXIST.	EXIST.	EXIST.	A		20 MIN	2	C10		9 1/2"
	C202A	EXISTING TO REMAIN	EXIST.	EXIST.	EXIST.	EXIST.	EXIST.	EXIST.	EXIST.	EXIST.		EXIST.	EXIST.	H3/F8/C9		DOORS TO STAIRS PREVIOUSLY REPLACED
	C202B	EXISTING TO REMAIN	EXIST.	EXIST.	EXIST.	EXIST.	EXIST.	EXIST.	EXIST.	EXIST.		EXIST.	EXIST.	H3/F8/C9		DOORS TO STAIRS PREVIOUSLY REPLACED
	C202C	2'-0" x 6'-8"	B	WD.	1-3/4"	TRANS.	EXIST.	EXIST.	EXIST.	A		20 MIN	3	C7	C202A	9 1/2"
	C202D	2'-0" x 6'-8"	B	WD.	1-3/4"	TRANS.	EXIST.	EXIST.	EXIST.	A		20 MIN	3	C7	C202B	9 1/2"

NOTE: ALL GREY BOXES SHALL INDICATE A DOOR THAT IS ASSOCIATED WITH ALTERNATE #2

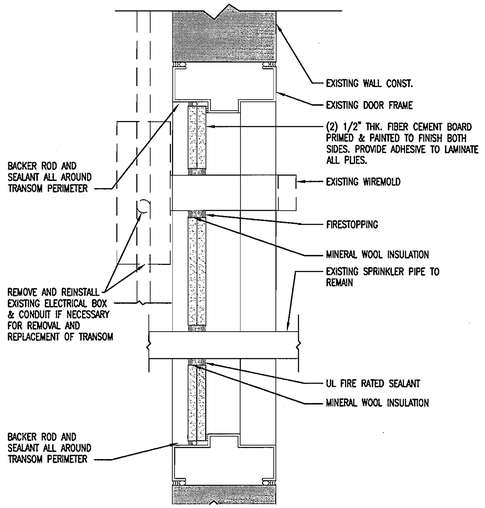

F5 TRANSOM HORIZONTAL SECTION
3"=1'-0" SIM. TO UL# (W-L-1016)

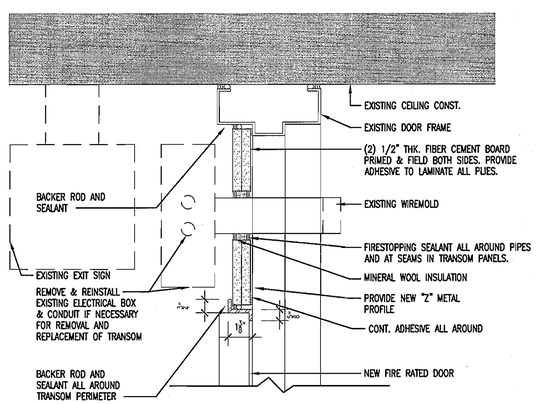

F5 TRANSOM VERTICAL SECTION
3"=1'-0" SIM. TO UL# (W-L-1016)

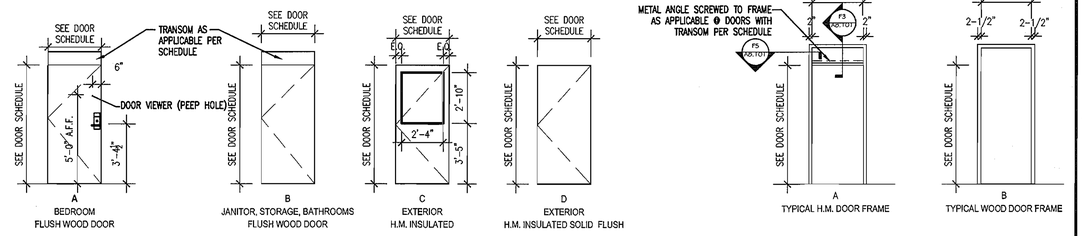

H5 DOOR ELEVATIONS
N.T.S.

TectonArchitects | inc
1 Hartford Sq. West, Hartford CT 06106
860 548 0802
17 Railroad Avenue, Westerly RI 02891
401 596 7555
tectonarchitects.com

Notice:
This drawing is the property of Tecton Architects | inc The use, re-use or reproduction of this drawing for any purpose whatsoever without an expressed written agreement between Tecton Architects | inc and the user is prohibited. Rights to use the information on this sheet are not transferred until payment has been received for services rendered. Any rights so granted are non-transferable to other parties without the prior expressed written consent of Tecton Architects | inc
© 2012 Tecton Architects | inc

Consultant

Owner
THE UNIVERSITY OF RHODE ISLAND
THINK BIG WE DO

Project
University of Rhode Island
ALDRICH HALL
BATHROOM RENOVATIONS & DOOR & SIGNAGE REPLACEMENT
KINGSTON, RI

Key Plan

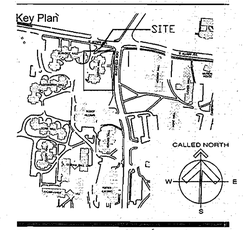

Seals

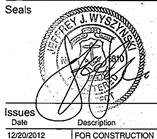

Issues

Date	Description
12/20/2012	FOR CONSTRUCTION

Revisions

No.	Date	Description
1	12/05/2012	REVIEW

Drawing Title

DOOR SCHEDULE

Issue Date: 12/20/2012

Project No:	KC.R.ROGW. 2010.001	Scale:	AS NOTED
Project Manager:	MT	Production Leader:	MS
Project Architect:	MT	Peer Reviewer:	JM

Drawing Number

A8.101

THIRD FLOOR DOOR, FRAME & SIGNAGE SCHEDULE

NOTE: PRIOR TO ORDERING OF ANY UNITS ALL DIMENSIONS SHALL BE FIELD VERIFIED

ALTERNATE	NUMBER	SIZE	DOOR				FRAME				TRANSOM	DOOR RATING	HDWR.	SIGN		TRANSOM HT. (TOP OF DOOR TO TOP OF FRAME) REMARKS
			ELEV.	MTL.	THK.	FINISH	MT.	THK.	FINISH	ELEV.				TYPE	RM#	
	A300A	2'-4" x 7'-5 1/2"	A	WD.	1-3/4"	TRANS.	EXIST.	EXIST.	EXIST.	A		20 MIN	1	C3/F8	A200A	
	A300B	2'-4" x 7'-5 1/2"	A	WD.	1-3/4"	TRANS.	EXIST.	EXIST.	EXIST.	A		20 MIN	1	C3/F8	A200B	
	A300C	2'-4" x 7'-5 1/2"	A	WD.	1-3/4"	TRANS.	EXIST.	EXIST.	EXIST.	A		20 MIN	1	C3/F8	A200C	
	A300D	2'-4" x 7'-5 1/2"	A	WD.	1-3/4"	TRANS.	EXIST.	EXIST.	EXIST.	A		20 MIN	1	C3/F8	A200D	
	A300E	2'-0" x 6'-8"	B	WD.	1-3/4"	TRANS.	EXIST.	EXIST.	EXIST.	A		20 MIN	2	C10		9 1/2"
	A300F	2'-0" x 6'-8"	B	WD.	1-3/4"	TRANS.	EXIST.	EXIST.	EXIST.	A		20 MIN	2	C10		9 1/2"
	A301A	2'-4" x 7'-5 1/2"	A	WD.	1-3/4"	TRANS.	EXIST.	EXIST.	EXIST.	A		20 MIN	1	C3/F8	A201A	
	A301B	2'-4" x 7'-5 1/2"	A	WD.	1-3/4"	TRANS.	EXIST.	EXIST.	EXIST.	A		20 MIN	1	C3/F8	A201B	
	A301C	2'-4" x 7'-5 1/2"	A	WD.	1-3/4"	TRANS.	EXIST.	EXIST.	EXIST.	A		20 MIN	1	C3/F8	A201C	
	A301D	2'-4" x 6'-8"	A	WD.	1-3/4"	TRANS.	EXIST.	EXIST.	EXIST.	A		20 MIN	1	C3/F8	A201D	
	A301E	2'-0" x 6'-8"	A	WD.	1-3/4"	TRANS.	EXIST.	EXIST.	EXIST.	A		20 MIN	2	C10		9 1/2"
	A301F	2'-0" x 6'-8"	B	WD.	1-3/4"	TRANS.	EXIST.	EXIST.	EXIST.	A		20 MIN	2	C10		9 1/2"
	A302A	EXISTING TO REMAIN	EXIST.	EXIST.	EXIST.	EXIST.	EXIST.	EXIST.	EXIST.	EXIST.		EXIST.	EXIST.	H3/F8/C9		DOORS TO STAIRS PREVIOUSLY REPLACED
	A302B	EXISTING TO REMAIN	EXIST.	EXIST.	EXIST.	EXIST.	EXIST.	EXIST.	EXIST.	EXIST.		EXIST.	EXIST.	H3/F8/C9		DOORS TO STAIRS PREVIOUSLY REPLACED
	A302C	2'-0" x 6'-8"	B	WD.	1-3/4"	TRANS.	EXIST.	EXIST.	EXIST.	A		20 MIN	3	C7	A202A	9 1/2"
	A302D	2'-0" x 6'-8"	B	WD.	1-3/4"	TRANS.	EXIST.	EXIST.	EXIST.	A		20 MIN	3	C7	A202B	9 1/2"
	B300A	2'-4" x 7'-0 1/2"	A	WD.	1-3/4"	TRANS.	EXIST.	EXIST.	EXIST.	A		20 MIN	1	C3/F8	B200A	
	B300B	2'-4" x 7'-0 1/2"	A	WD.	1-3/4"	TRANS.	EXIST.	EXIST.	EXIST.	A		20 MIN	1	C3/F8	B200B	
	B300C	2'-4" x 7'-0 1/2"	A	WD.	1-3/4"	TRANS.	EXIST.	EXIST.	EXIST.	A		20 MIN	1	C3/F8	B200C	
	B300D	2'-4" x 7'-0 1/2"	A	WD.	1-3/4"	TRANS.	EXIST.	EXIST.	EXIST.	A		20 MIN	1	C3/F8	B200D	
	B300E	2'-0" x 6'-8"	B	H.M.	1-3/4"	TRANS.	EXIST.	EXIST.	EXIST.	A		20 MIN	2	C10		9 1/2"
	B300F	2'-0" x 6'-8"	B	WD.	1-3/4"	TRANS.	EXIST.	EXIST.	EXIST.	A		20 MIN	2	C10		9 1/2"
	B301A	2'-4" x 7'-5 1/2"	A	WD.	1-3/4"	TRANS.	EXIST.	EXIST.	EXIST.	A		20 MIN	1	C3/F8	B201A	
	B301B	2'-4" x 7'-0 1/2"	A	WD.	1-3/4"	TRANS.	EXIST.	EXIST.	EXIST.	A		20 MIN	1	C3/F8	B201B	
	B301C	2'-4" x 7'-5 1/2"	A	WD.	1-3/4"	TRANS.	EXIST.	EXIST.	EXIST.	A		20 MIN	1	C3/F8	B201C	
	B301D	2'-4" x 7'-5 1/2"	A	WD.	1-3/4"	TRANS.	EXIST.	EXIST.	EXIST.	A		20 MIN	1	C3/F8	B201D	
	B301E	2'-0" x 6'-8"	B	WD.	1-3/4"	TRANS.	EXIST.	EXIST.	EXIST.	A		20 MIN	2	C10		9 1/2"
	B301F	2'-0" x 6'-8"	B	WD.	1-3/4"	TRANS.	EXIST.	EXIST.	EXIST.	A		20 MIN	2	C10		9 1/2"
	B302A	EXISTING TO REMAIN	EXIST.	EXIST.		EXIST.	EXIST.	EXIST.	EXIST.	EXIST.		EXIST.	EXIST.	H3/F8/C9		DOORS TO STAIRS PREVIOUSLY REPLACED
	B302B	EXISTING TO REMAIN	EXIST.	EXIST.	EXIST.	EXIST.	EXIST.	EXIST.	EXIST.	EXIST.		EXIST.	EXIST.	H3/F8/C9		DOORS TO STAIRS PREVIOUSLY REPLACED
	B302C	2'-0" x 6'-8"	B	WD.	1-3/4"	TRANS.	EXIST.	EXIST.	EXIST.	A		20 MIN	3	C7	C202A	9 1/2"
	B302D	2'-0" x 6'-8"	B	WD.	1-3/4"	TRANS.	EXIST.	EXIST.	EXIST.	A		20 MIN	3	C7	C202B	9 1/2"
	C300A	2'-4" x 7'-5 1/2"	A	WD.	1-3/4"	TRANS.	EXIST.	EXIST.	EXIST.	A		20 MIN	1	C3/F8	C200A	
	C300B	2'-4" x 7'-5 1/2"	A	WD.	1-3/4"	TRANS.	EXIST.	EXIST.	EXIST.	A		20 MIN	1	C3/F8	C200B	
	C300C	2'-4" x 7'-5 1/2"	A	WD.	1-3/4"	TRANS.	EXIST.	EXIST.	EXIST.	A		20 MIN	1	C3/F8	C200C	
	C300D	2'-4" x 7'-5 1/2"	A	WD.	1-3/4"	TRANS.	EXIST.	EXIST.	EXIST.	A		20 MIN	1	C3/F8	C200D	
	C300E	2'-0" x 6'-8"	B	WD.	1-3/4"	TRANS.	EXIST.	EXIST.	EXIST.	A		20 MIN	2	C10		9 1/2"
	C300F	2'-0" x 6'-8"	B	WD.	1-3/4"	TRANS.	EXIST.	EXIST.	EXIST.	A		20 MIN	2	C10		9 1/2"
	C301A	2'-4" x 7'-5 1/2"	A	WD.	1-3/4"	TRANS.	EXIST.	EXIST.	EXIST.	A		20 MIN	1	C3/F8	C201A	
	C301B	2'-4" x 7'-5 1/2"	A	WD.	1-3/4"	TRANS.	EXIST.	EXIST.	EXIST.	A		20 MIN	1	C3/F8	C201B	
	C301C	2'-4" x 7'-5 1/2"	A	WD.	1-3/4"	TRANS.	EXIST.	EXIST.	EXIST.	A		20 MIN	1	C3/F8	C201C	
	C301D	2'-4" x 7'-5 1/2"	A	WD.	1-3/4"	TRANS.	EXIST.	EXIST.	EXIST.	A		20 MIN	1	C3/F8	C201D	
	C301E	3'-0" x 7'-0"	B	H.M.	1-3/4"	PT.	EXIST.	EXIST.	EXIST.	A		20 MIN	1	C3/F8	C201E	
	C301F	2'-0" x 6'-8"	B	WD.	1-3/4"	TRANS.	EXIST.	EXIST.	EXIST.	A		20 MIN	2	C10		9 1/2"
	C301G	2'-0" x 6'-8"	B	WD.	1-3/4"	TRANS.	EXIST.	EXIST.	EXIST.	A		20 MIN	2	C10		9 1/2"
	C302A	EXISTING TO REMAIN	EXIST.	EXIST.	EXIST.	EXIST.	EXIST.	EXIST.	EXIST.	EXIST.		EXIST.	EXIST.	H3/F8/C9		DOORS TO STAIRS PREVIOUSLY REPLACED
	C302B	EXISTING TO REMAIN	EXIST.	EXIST.	EXIST.	EXIST.	EXIST.	EXIST.	EXIST.	EXIST.		EXIST.	EXIST.	H3/F8/C9		DOORS TO STAIRS PREVIOUSLY REPLACED
	C302C	2'-0" x 6'-8"	B	WD.	1-3/4"	TRANS.	EXIST.	EXIST.	EXIST.	A		20 MIN	3	C7	C202A	9 1/2"
	C302D	2'-0" x 6'-8"	B	WD.	1-3/4"	TRANS.	EXIST.	EXIST.	EXIST.	A		20 MIN	3	C7	C202B	9 1/2"

NOTE: ALL GREY BOXES SHALL INDICATE A DOOR THAT IS ASSOCIATED WITH ALTERNATE #2

THIRD FLOOR DOOR, FRAME & SIGNAGE SCHEDULE

NOTE: PRIOR TO ORDERING OF ANY UNITS ALL DIMENSIONS SHALL BE FIELD VERIFIED

ALTERNATE	NUMBER	SIZE	DOOR				FRAME				TRANSOM	DOOR RATING	HDWR.	SIGN		TRANSOM HT. (TOP OF DOOR TO TOP OF FRAME) REMARKS
			ELEV.	MTL.	THK.	FINISH	MT.	THK.	FINISH	ELEV.				TYPE	RM#	
	A400A	2'-4" x 7'-5 1/2"	A	WD.	1-3/4"	TRANS.	EXIST.	EXIST.	EXIST.	A		20 MIN	1	C3/F8	A200A	
	A400B	2'-4" x 7'-5 1/2"	A	WD.	1-3/4"	TRANS.	EXIST.	EXIST.	EXIST.	A		20 MIN	1	C3/F8	A200B	
	A400C	2'-4" x 7'-5 1/2"	A	WD.	1-3/4"	TRANS.	EXIST.	EXIST.	EXIST.	A		20 MIN	1	C3/F8	A200C	
	A400D	2'-4" x 7'-5 1/2"	A	WD.	1-3/4"	TRANS.	EXIST.	EXIST.	EXIST.	A		20 MIN	1	C3/F8	A200D	
	A400E	2'-0" x 6'-8"	B	WD.	1-3/4"	TRANS.	EXIST.	EXIST.	EXIST.	A		20 MIN	2	C10		9 1/2"
	A400F	2'-0" x 6'-8"	B	WD.	1-3/4"	TRANS.	EXIST.	EXIST.	EXIST.	A		20 MIN	2	C10		9 1/2"
	A401A	2'-4" x 7'-5 1/2"	A	WD.	1-3/4"	TRANS.	EXIST.	EXIST.	EXIST.	A		20 MIN	1	C3/F8	A201A	
	A401B	2'-4" x 7'-5 1/2"	A	WD.	1-3/4"	TRANS.	EXIST.	EXIST.	EXIST.	A		20 MIN	1	C3/F8	A201B	
	A401C	2'-4" x 7'-5 1/2"	A	WD.	1-3/4"	TRANS.	EXIST.	EXIST.	EXIST.	A		20 MIN	1	C3/F8	A201C	
	A401D	2'-4" x 6'-8"	A	WD.	1-3/4"	TRANS.	EXIST.	EXIST.	EXIST.	A		20 MIN	1	C3/F8	A201D	
	A401E	2'-0" x 6'-8"	A	WD.	1-3/4"	TRANS.	EXIST.	EXIST.	EXIST.	A		20 MIN	2	C10		9 1/2"
	A401F	2'-0" x 6'-8"	B	WD.	1-3/4"	TRANS.	EXIST.	EXIST.	EXIST.	A		20 MIN	2	C10		9 1/2"
	A402A	EXISTING TO REMAIN	EXIST.	EXIST.	EXIST.	EXIST.	EXIST.	EXIST.	EXIST.	EXIST.		EXIST.	EXIST.	H3/F8/C9		DOORS TO STAIRS PREVIOUSLY REPLACED
	A402B	EXISTING TO REMAIN	EXIST.	EXIST.	EXIST.	EXIST.	EXIST.	EXIST.	EXIST.	EXIST.		EXIST.	EXIST.	H3/F8/C9		DOORS TO STAIRS PREVIOUSLY REPLACED
	A402C	2'-0" x 6'-8"	B	WD.	1-3/4"	TRANS.	EXIST.	EXIST.	EXIST.	A		20 MIN	3	C7	A202A	9 1/2"
	A402D	2'-0" x 6'-8"	B	WD.	1-3/4"	TRANS.	EXIST.	EXIST.	EXIST.	A		20 MIN	3	C7	A202B	9 1/2"
	B400A	2'-4" x 7'-0 1/2"	A	WD.	1-3/4"	TRANS.	EXIST.	EXIST.	EXIST.	A		20 MIN	1	C3/F8	B200A	
	B400B	2'-4" x 7'-0 1/2"	A	WD.	1-3/4"	TRANS.	EXIST.	EXIST.	EXIST.	A		20 MIN	1	C3/F8	B200B	
	B400C	2'-4" x 7'-0 1/2"	A	WD.	1-3/4"	TRANS.	EXIST.	EXIST.	EXIST.	A		20 MIN	1	C3/F8	B200C	
	B400D	2'-4" x 7'-0 1/2"	A	WD.	1-3/4"	TRANS.	EXIST.	EXIST.	EXIST.	A		20 MIN	1	C3/F8	B200D	
	B400E	2'-0" x 6'-8"	B	H.M.	1-3/4"	TRANS.	EXIST.	EXIST.	EXIST.	A		20 MIN	2	C10		9 1/2"
	B400F	2'-0" x 6'-8"	B	WD.	1-3/4"	TRANS.	EXIST.	EXIST.	EXIST.	A		20 MIN	2	C10		9 1/2"
	B401A	2'-4" x 7'-5 1/2"	A	WD.	1-3/4"	TRANS.	EXIST.	EXIST.	EXIST.	A		20 MIN	1	C3/F8	B201A	
	B401B	2'-4" x 7'-0 1/2"	A	WD.	1-3/4"	TRANS.	EXIST.	EXIST.	EXIST.	A		20 MIN	1	C3/F8	B201B	
	B401C	2'-4" x 7'-5 1/2"	A	WD.	1-3/4"	TRANS.	EXIST.	EXIST.	EXIST.	A		20 MIN	1	C3/F8	B201C	
	B401D	2'-4" x 7'-5 1/2"	A	WD.	1-3/4"	TRANS.	EXIST.	EXIST.	EXIST.	A		20 MIN	1	C3/F8	B201D	
	B401E	2'-0" x 6'-8"	B	WD.	1-3/4"	TRANS.	EXIST.	EXIST.	EXIST.	A		20 MIN	2	C10		9 1/2"
	B401F	2'-0" x 6'-8"	B	WD.	1-3/4"	TRANS.	EXIST.	EXIST.	EXIST.	A		20 MIN	2	C10		9 1/2"
	B402A	EXISTING TO REMAIN	EXIST.	EXIST.	EXIST.	EXIST.	EXIST.	EXIST.	EXIST.	EXIST.		EXIST.	EXIST.	H3/F8/C9		DOORS TO STAIRS PREVIOUSLY REPLACED
	B402B	EXISTING TO REMAIN	EXIST.	EXIST.	EXIST.	EXIST.	EXIST.	EXIST.	EXIST.	EXIST.		EXIST.	EXIST.	H3/F8/C9		DOORS TO STAIRS PREVIOUSLY REPLACED
	B402C	2'-0" x 6'-8"	B	WD.	1-3/4"	TRANS.	EXIST.	EXIST.	EXIST.	A		20 MIN	3	C7	C202A	9 1/2"
	B402D	2'-0" x 6'-8"	B	WD.	1-3/4"	TRANS.	EXIST.	EXIST.	EXIST.	A		20 MIN	3	C7	C202B	9 1/2"
	C400A	2'-4" x 7'-5 1/2"	A	WD.	1-3/4"	TRANS.	EXIST.	EXIST.	EXIST.	A		20 MIN	1	C3/F8	C200A	
	C400B	2'-4" x 7'-5 1/2"	A	WD.	1-3/4"	TRANS.	EXIST.	EXIST.	EXIST.	A		20 MIN	1	C3/F8	C200B	
	C400C	2'-4" x 7'-5 1/2"	A	WD.	1-3/4"	TRANS.	EXIST.	EXIST.	EXIST.	A		20 MIN	1	C3/F8	C200C	
	C400D	2'-4" x 7'-5 1/2"	A	WD.	1-3/4"	TRANS.	EXIST.	EXIST.	EXIST.	A		20 MIN	1	C3/F8	C200D	
	C400E	2'-0" x 6'-8"	B	WD.	1-3/4"	TRANS.	EXIST.	EXIST.	EXIST.	A		20 MIN	2	C10		9 1/2"
	C400F	2'-0" x 6'-8"	B	WD.	1-3/4"	TRANS.	EXIST.	EXIST.	EXIST.	A		20 MIN	2	C10		9 1/2"
	C401A	2'-4" x 7'-5 1/2"	A	WD.	1-3/4"	TRANS.	EXIST.	EXIST.	EXIST.	A		20 MIN	1	C3/F8	C201A	
	C401B	2'-4" x 7'-5 1/2"	A	WD.	1-3/4"	TRANS.	EXIST.	EXIST.	EXIST.	A		20 MIN	1	C3/F8	C201B	
	C401C	2'-4" x 7'-5 1/2"	A	WD.	1-3/4"	TRANS.	EXIST.	EXIST.	EXIST.	A		20 MIN	1	C3/F8	C201C	
	C401D	2'-4" x 7'-5 1/2"	A	WD.	1-3/4"	TRANS.	EXIST.	EXIST.	EXIST.	A		20 MIN	1	C3/F8	C201D	
	C401E	3'-0" x 7'-0"	B	H.M.	1-3/4"	PT.	EXIST.	EXIST.	EXIST.	A		20 MIN	1	C3/F8	C201E	
	C401F	2'-0" x 6'-8"	B	WD.	1-3/4"	TRANS.	EXIST.	EXIST.	EXIST.	A		20 MIN	2	C10		9 1/2"
	C401G	2'-0" x 6'-8"	B	WD.	1-3/4"	TRANS.	EXIST.	EXIST.	EXIST.	A		20 MIN	2	C10		9 1/2"
	C402A	EXISTING TO REMAIN	EXIST.	EXIST.	EXIST.	EXIST.	EXIST.	EXIST.	EXIST.	EXIST.		EXIST.	EXIST.	H3/F8/C9		DOORS TO STAIRS PREVIOUSLY REPLACED
	C402B	EXISTING TO REMAIN	EXIST.	EXIST.	EXIST.	EXIST.	EXIST.	EXIST.	EXIST.	EXIST.		EXIST.	EXIST.	H3/F8/C9		DOORS TO STAIRS PREVIOUSLY REPLACED
	C402C	2'-0" x 6'-8"	B	WD.	1-3/4"	TRANS.	EXIST.	EXIST.	EXIST.	A		20 MIN	3	C7	C202A	9 1/2"
	C402D	2'-0" x 6'-8"	B	WD.	1-3/4"	TRANS.	EXIST.	EXIST.	EXIST.	A		20 MIN	3	C7	C202B	9 1/2"

NOTE: ALL GREY BOXES SHALL INDICATE A DOOR THAT IS ASSOCIATED WITH ALTERNATE #2

TectonArchitects | inc

1 Hartford Sq. West, Hartford CT 06106
860 548 0802

17 Railroad Avenue, Westerly RI 02891
401 596 7555

tectonarchitects.com

Notice:
This drawing is the property of Tecton Architects | inc The use, re-use or reproduction of this drawing for any purpose whatsoever without an expressed written agreement between Tecton Architects | inc and the user is prohibited. Rights to use the information on this sheet are not transferred until payment has been received for services rendered. Any rights so granted are non-transferable to other parties without the prior expressed written consent of Tecton Architects | inc

© 2012 Tecton Architects | inc

Consultant

Owner

THE UNIVERSITY OF RHODE ISLAND

THINK BIG WE DO

Project

University of Rhode Island
ALDRICH HALL
BATHROOM RENOVATIONS &
DOOR & SIGNAGE REPLACEMENT

KINGSTON, RI

Key Plan

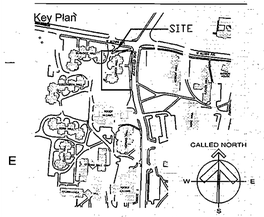

Seals

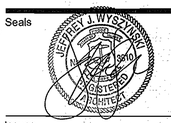

Issues

Date	Description
12/20/2012	FOR CONSTRUCTION

Revisions

No.	Date	Description
1	12/05/2012	REVIEW

Drawing Title

DOOR SCHEDULE

Issue Date:	12/20/2012
Project No: KC.R.ROGW.2010.001	Scale: AS NOTED
Project Manager: MT	Production Leader: MS
Project Architect: MT	Peer Reviewer: JM

Drawing Number

A8.102

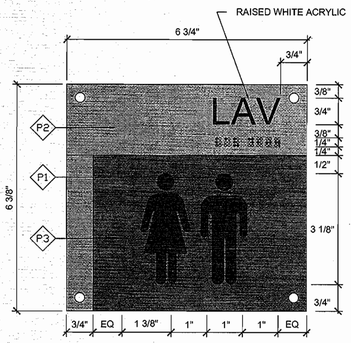

C10 LAVATORY
6"=1'-0"

DEEP ACRYLIC SIGN BACK SPRAYED P2 AND P3 WITH RAISED WHITE ARIAL COPY AND BRAILLE. SYMBOLS WHITE DIRECT PRINT WITH LAMINATE.
TYPICAL MOUNTING

APPLIES TO ALL ROOMS LABELED LAVATORY, TO BE APPLIED TO OUTSIDE OF LAV IN CORRIDOR.

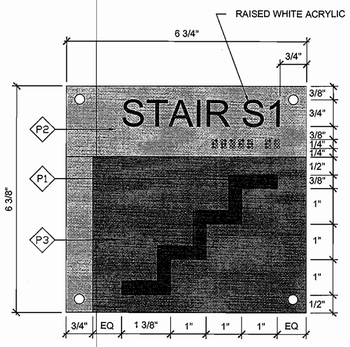

C9 STAIRS
6"=1'-0"

DEEP ACRYLIC SIGN BACK SPRAYED P2 AND P3 WITH RAISED WHITE ARIAL COPY AND BRAILLE. SYMBOLS WHITE DIRECT PRINT WITH LAMINATE.
TYPICAL MOUNTING

APPLIES TO ALL ROOMS LABELED STAIR, TO BE APPLIED TO OUTSIDE OF STAIR, IN CORRIDOR.

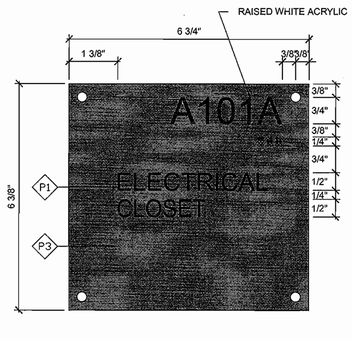

C7 MECHANICAL / ELECTRICAL
6"=1'-0"

DEEP ACRYLIC SIGN BACK SPRAYED P3 WITH RAISED WHITE ARIAL COPY AND BRAILLE. WHITE SECONDARY COPY DIRECT PRINT WITH LAMINATE.
TYPICAL MOUNTING

APPLIES TO ALL ROOMS LABELED MECH, MECHANICAL, STOR/CUST AND FIRE PROTECTION

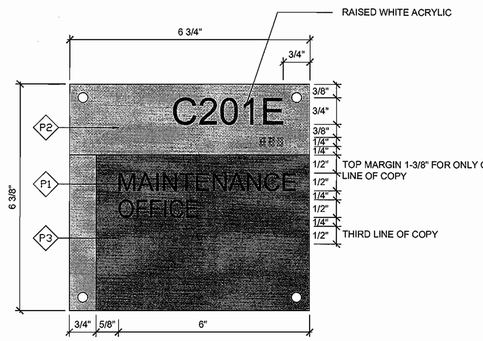

C5 AUXILIARY SPACES / OFFICES
6"=1'-0"

DEEP ACRYLIC SIGN BACK SPRAYED P2 AND P3 WITH RAISED WHITE ARIAL COPY AND BRAILLE. WHITE SECONDARY COPY DIRECT PRINT WITH LAMINATE.
TYPICAL MOUNTING

APPLIES TO ALL ROOMS LABELED OTHER THAN, REQUIRES COORDINATION WITH URI OFFICE OF RESIDENTIAL LIFE.

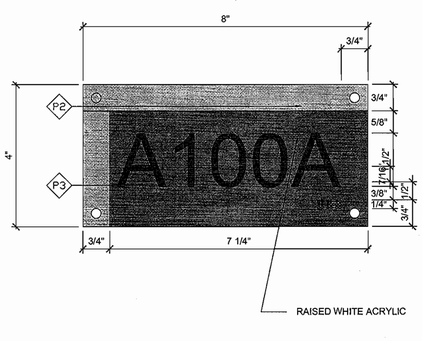

C3 STUDENT ROOMS
6"=1'-0"

NOTE: PROVIDE EACH LOCATION WITH 1A

DEEP ACRYLIC SIGN BACK SPRAYED P2 AND P3 WITH RAISED WHITE ARIAL COPY AND BRAILLE.
TYPICAL MOUNTING

APPLIES TO ALL ROOMS LABELED OFFICE WITH TEMPORARY PERSONNEL. REQUIRES COORDINATION WITH URI OFFICE OF RESIDENTIAL LIFE.

DEMOLITION NOTES:
REMOVE EXISTING SIGNS FASTENERS AND ADHESIVES FROM LOCATIONS WHERE NEW SIGNAGE IS SCHEDULED.

REMOVE DOORS AND ASSOCIATED HARDWARE WHERE INDICATED TO BE NEW, SALVAGE LOCKSETS AND RETURN TO OWNER. EXISTING FRAMES TO REMAIN.

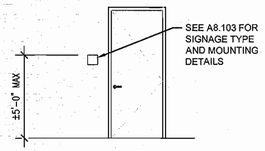

NOTE:
SIGNS MUST BE LOCATED ON THE LOCKSET SIDE OF DOOR, BETWEEN MINIMUM 3" TO MAXIMUM 11" AWAY FROM DOOR FRAME, ALIGNED WITH JOINTS OF INTERIOR WALL FINISH. LOCATIONS WILL VARY DEPENDING ON RELATION OF DOOR TO WALL FINISH.

H10 SIGNAGE MOUNTING LOCATION
N.T.S.

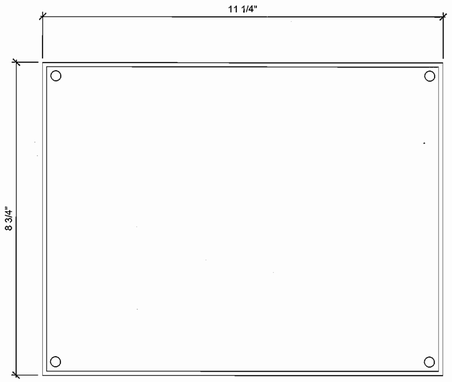

F8 CLEAR ACRYLIC FIRE EVACUATION MAP COVER
6"=1'-0"

CLEAR UNBREAKABLE ACRYLIC WITH SQUARE CORNERS AND BEVELED EDGES. TYPICAL MOUNTING WITHOUT DOUBLE SIDED TAPE.
LAMINATED PLANS PROVIDED BY OWNER

APPLIED TO INTERIOR OF DOOR AT EACH ROOM PER SCHEDULE

ALSO TO BE APPLIED IN CORRIDOR BETWEEN STAIRS

TYPICAL MOUNTING: FOUR COUNTERSUNK HOLES CENTERED AT 3/8" FROM THE CORNERS WITH #6 FLAT TOP TORX SCREWS WITH PIN. PRE-DRILL AND PROVIDE EXPANSION ANCHORS, USE 1/32" BLACK FOAM DOUBLE SIDED TAPE TO ATTACH SIGNAGE TO WALL. INSET TAPE 3/8" FROM EDGES OF PLATE AT FULL PERIMETER OF SIGN.

PAINT & FINISH SCHEDULE

THIS SCHEDULE PROVIDES COLOR MATCHING INFORMATION FOR ALL SIGNS AND GRAPHICS SPECIFIED IN THE SIGN CONSTRUCTION DRAWINGS. PAINT COLORS ARE IDENTIFIED ON THE DRAWINGS WITH DIAMOND TAGS CONTAINING A LETTER AND NUMBER. LISTED BELOW ARE THE TAGS WITH COLOR REFERENCES FOR USE IN MATCHING PAINT. SEE SIGN SPECIFICATIONS FOR PAINT MANUFACTURER AND FINISH INFORMATION.

PROGRAM COLORS & MATERIAL FINISHES

P1 WHITE

P2 MP 15661 (LIGHT GRAY)

P3 MP 18214 (DARK GRAY)

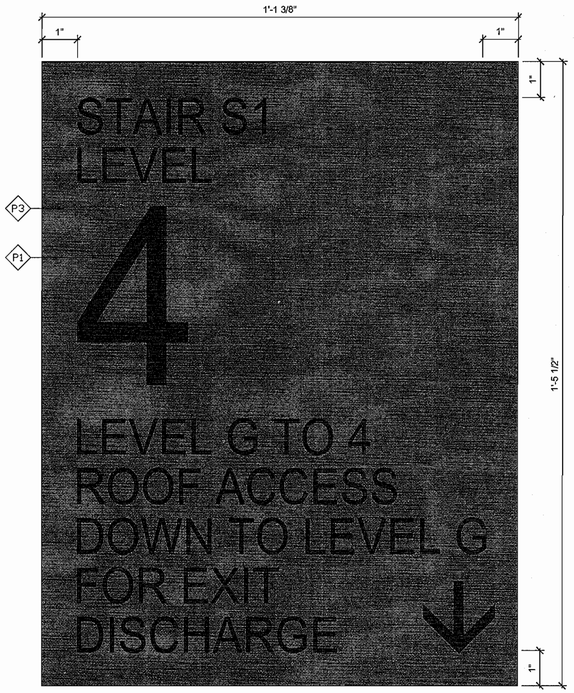

H3 STAIRWELL
6"=1'-0"

APPLIES TO ALL ROOMS LABELED STAIR, TO BE APPLIED INSIDE OF STAIRWELL AT EACH LEVEL. REQUIRES COORDINATION WITH URI OFFICE OF RESIDENTIAL LIFE.

TectonArchitects | inc
1 Hartford Sq. West. Hartford CT 06106
860 548 0802
17 Railroad Avenue, Westerly RI 02891
401 596 7559
tectonarchitects.com

Notice:
This drawing is the property of Tecton Architects | inc The use, re-use or reproduction of this drawing for any purpose whatsoever without an expressed written agreement between Tecton Architects | inc and the user is prohibited. Rights to use the information on this sheet are not transferred until payment has been received for services rendered. Any rights so granted are non-transferable to other parties without the prior expressed written consent of Tecton Architects | inc

© 2012 Tecton Architects | inc

Consultant

Owner
THE UNIVERSITY OF RHODE ISLAND
THINK BIG WE DO

Project
University of Rhode Island
ALDRICH HALL
BATHROOM RENOVATIONS & DOOR & SIGNAGE REPLACEMENT
KINGSTON, RI

Key Plan

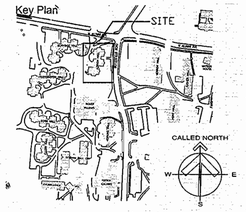

Seals

Issues

Date	Description
12/20/2012	FOR CONSTRUCTION

Revisions

No.	Date	Description
1	12/05/2012	REVIEW

Drawing Title

SIGNAGE & MOUNTING DETAILS

Issue Date:	12/20/2012
Project No: KC.R.ROGW.2010.001	Scale: AS NOTED
Project Manager: MT	Production Leader: MS
Project Architect: MT	Peer Reviewer: JM

Drawing Number

A8.103

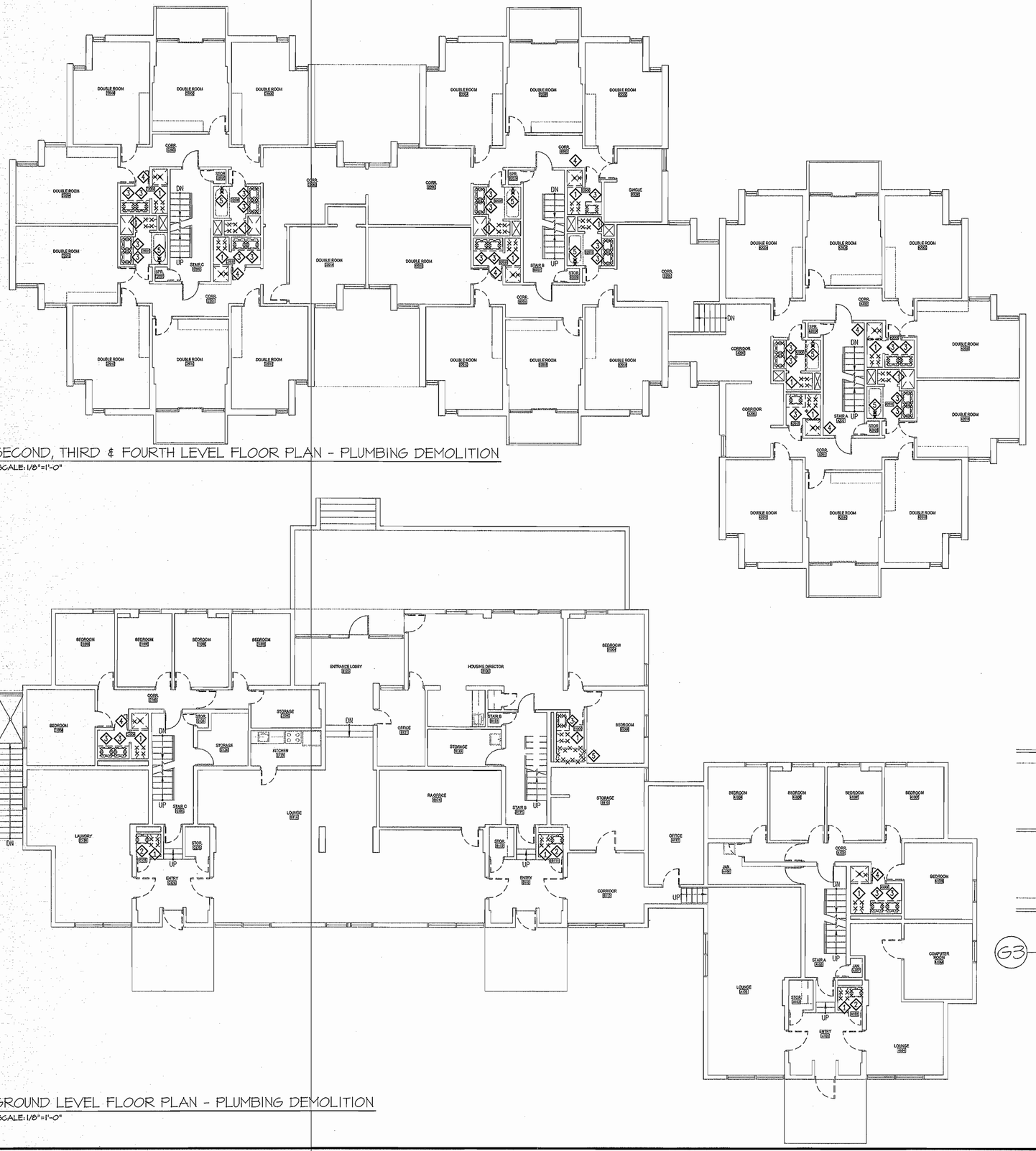

D10 SECOND, THIRD & FOURTH LEVEL FLOOR PLAN - PLUMBING DEMOLITION

SCALE: 1/8"=1'-0"

H10 GROUND LEVEL FLOOR PLAN - PLUMBING DEMOLITION

SCALE: 1/8"=1'-0"

GENERAL DEMOLITION NOTES:

1. THE CONTRACTOR RESPONSIBLE FOR THE DEMOLITION OF THE EXISTING PLUMBING FIXTURES, EQUIPMENT AND PIPING SHALL BE REQUIRED TO VISIT THE PROJECT SITE TO FAMILIARIZE THEMSELVES WITH THE FULL EXTENT OF WORK REQUIRED. VERIFY FIXTURE TYPES, QUANTITIES AND LOCATIONS. VERIFY WALL, CEILING AND FLOOR CONSTRUCTION. VERIFY AS MUCH OF THE EXISTING PIPING SYSTEM AS POSSIBLE. THIS FIELD VISIT SHALL BE CONDUCTED DURING THE BID PROCESS. BIDS SHALL BE BASED ON INFORMATION GATHERED DURING THIS VISIT.

2. REMOVE ALL PLUMBING FIXTURES INDICATED TO BE REMOVED. REMOVALS SHALL INCLUDE ANY TOILET FLANGES, SUPPLY RISERS, P-TRAPS, TAILPIECES, FLOOR DRAIN STRAINERS AND MIXING VALVES. THIS CONTRACTOR SHALL CAP OR PLUG WASTE AND WATER PIPING UNTIL NEW FIXTURES ARE RECONNECTED TO PREVENT ANY DEBRIS FROM ENTERING THE PIPING SYSTEMS OR SEWER GASES FROM ESCAPING. REMOVE ANY EXISTING PLUMBING WATER AND/OR WASTE PIPE FOUND TO BE ABANDONED. REFER TO NEW WORK DRAWINGS FOR NEW PLUMBING WORK.

3. THE PLUMBING CONTRACTOR SHALL BE RESPONSIBLE FOR ALL SAW CUTTING, CORING AND PATCHING REQUIRED FOR THE INSTALLATION OF NEW WORK, AND FOR THE REMOVAL OF EXISTING WORK. COORDINATE EXTENT OF THE LIMIT OF WORK BEFORE BIDS ARE ISSUED.

4. THE SITE SHALL BE LEFT BROOM CLEAN AND ALL DEBRIS SHALL BE REMOVED FROM THE SITE. PROTECT EXISTING PLUMBING FIXTURES TO REMAIN FROM DAMAGE DURING CONSTRUCTION.

5. ALL PIPING RENDERED OBSOLETE SHALL BE REMOVED AND CAPPED BACK AT THE NEAREST LIVE MAIN. DO NOT LEAVE ANY "DEAD-ENDED" SANITARY PIPING.

6. REMOVE EXISTING HANGERS, VALVES, INSULATION AND SUPPORTS ASSOCIATED WITH PIPING THAT IS BEING REMOVED.

7. EXISTING PLUMBING FIXTURES BEING REMOVED SHALL BE TURNED OVER TO OWNER. VERIFY WITH OWNER WHICH ITEMS ARE TO BE STORED AND WHERE, AND WHICH ITEMS ARE TO BE DISPOSED OF.

DEMOLITION KEYED NOTES:

1. DISCONNECT & REMOVE EXISTING WATER CLOSET, TOILET SEAT, ASSOCIATED CLOSET FLANGE, STOP, FLEXIBLE SUPPLY AND COLD WATER SUPPLY TO WALL FOR RECONNECTION. SEE NEW WORK DRAWINGS.
2. DISCONNECT & REMOVE EXISTING WALL HUNG LAVATORY, FAUCET, TAILPIECE, P-TRAP, POP-UP DRAIN, STOPS AND FLEXIBLE HOT AND COLD WATER SUPPLIES. CUT BACK PIPING TO WALL FOR RECONNECTION – SEE NEW WORK DRAWINGS.
3. DISCONNECT & REMOVE EXISTING COUNTERTOP LAVATORY, FAUCET, TAILPIECE, P-TRAP, POP-UP DRAIN, STOPS AND FLEXIBLE HOT AND COLD WATER SUPPLIES. CUT BACK PIPING TO WALL FOR RECONNECTION – SEE NEW WORK DRAWINGS.
4. DISCONNECT & REMOVE EXISTING SHOWER CONTROLS, MIXING VALVE, SHOWER HEAD, TRAP, FLOOR DRAIN BODY WITH STRAINER. CUT BACK WASTE AND VENT AND HOT AND COLD WATER TO WALL FOR RECONNECTION – SEE NEW WORK DRAWINGS.
5. DISCONNECT & REMOVE EXISTING SHOWER/TUB CONTROLS, MIXING VALVE, SHOWER HEAD, TUB DRAIN, AND STRAINER. CUT BACK WASTE AND VENT AND HOT AND COLD WATER TO WALL FOR RECONNECTION – SEE NEW WORK DRAWINGS.

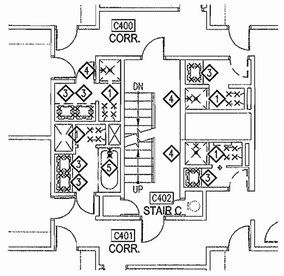

THE CONDITIONS SHOWN AT TOWER C. TOWER B SHALL BE SIMILAR

G3 FOURTH FLOOR FLOOR PLAN - PLUMBING DEMOLITION

SCALE: 1/8"=1'-0"

TectonArchitects | inc

1 Hartford Sq. West, Hartford CT 06106
860 548 0802

17 Railroad Avenue, Westerly RI 02891
401 596 7555

tectonarchitects.com

Notice:
This drawing is the property of Tecton Architects | Inc The use, re-use or reproduction of this drawing for any purpose whatsoever without an expressed written agreement between Tecton Architects | inc and the user is prohibited. Rights to use the information on this sheet are not transferred until payment has been received for services rendered. Any rights so granted are non-transferable to other parties without the prior expressed written consent of Tecton Architects | Inc

© 2012 Tecton Architects | Inc

Consultant

Owner

THE UNIVERSITY OF RHODE ISLAND

THINK BIG WE DO

Project

University of Rhode Island
ALDRICH HALL
BATHROOM RENOVATIONS & DOOR & SIGNAGE REPLACEMENT
KINGSTON, RI

Key Plan

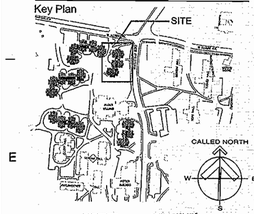

Seals

RICHARD C. NEWELL
No. 8486
REGISTERED
PROFESSIONAL ENGINEER
MECHANICAL

Issues

Date	Description
12/20/2012	CONSTRUCTION DOCUMENTS

Revisions

No.	Date	Description

Drawing Title

GROUND, SECOND THIRD, & FOURTH FLOOR PLANS PLUMBING DEMOLITION

Issue Date:	12/20/2012
Project No: URI16IN	Scale: AS NOTED
Project Manager: WMS	Production Leader: MS
Project Architect: MT	Peer Reviewer: RCN

Drawing Number

P1.101

CEC# 2012126

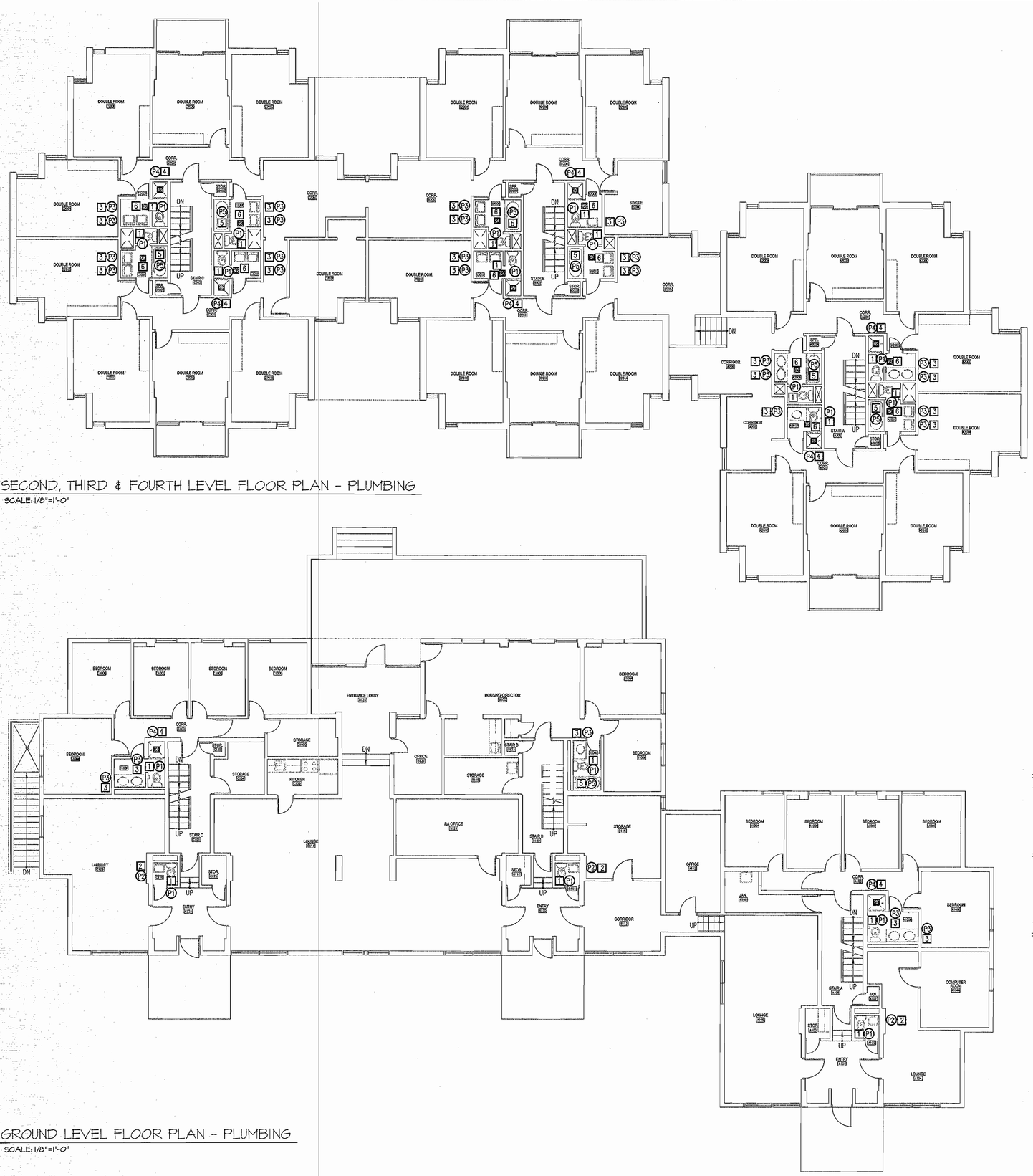

D1C SECOND, THIRD & FOURTH LEVEL FLOOR PLAN - PLUMBING

SCALE: 1/8"=1'-0"

H1C GROUND LEVEL FLOOR PLAN - PLUMBING

SCALE: 1/8"=1'-0"

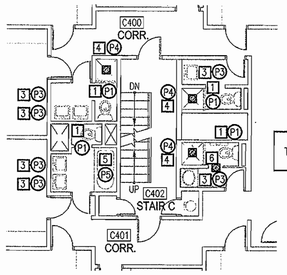

THE CONDITIONS SHOWN AT TOWER C. TOWER B SHALL BE SIMILAR

G3 FOURTH FLOOR FLOOR PLAN - PLUMBING

SCALE: 1/8"=1'-0"

NEW WORK KEYED NOTES:

1. INSTALL NEW WATER CLOSET, TOILET SEAT, ASSOCIATED CLOSET FLANGE, STOP AND FLEXIBLE COLD WATER SUPPLY. CONNECT 1/2"CW TO SUPPLY AT WALL. SEE PLUMBING FIXTURE SCHEDULE ON DRAWING P3.101.
2. INSTALL NEW WALL HUNG LAVATORY, FAUCET, TAILPIECE, P-TRAP, POP-UP DRAIN, STOPS AND FLEXIBLE HOT AND COLD WATER SUPPLIES. CONNECT 1/2"HOT AND COLD WATER TO SUPPLIES AT WALL. CONNECT 1-1/2"W TO 1-1/2"W AT WALL. SEE PLUMBING FIXTURE SCHEDULE ON DRAWING P3.101.
3. SOLID SURFACE COUNTERTOP WITH INTEGRAL BOWL(S) (BY OTHERS). INSTALL FAUCET, TAILPIECE, P-TRAP, POP-UP DRAIN, STOPS AND FLEXIBLE HOT AND COLD WATER SUPPLIES. CONNECT 1/2"HOT AND COLD WATER TO SUPPLIES AT WALL. CONNECT 1-1/2"W TO 1-1/2"W AT WALL. SEE PLUMBING FIXTURE SCHEDULE ON DRAWING P3.101.
4. SHOWER BASE AND SURROUND (BY OTHERS). INSTALL NEW SHOWER HEAD, MIXING VALVE, AND FLOOR DRAIN. CONNECT 1/2"HOT AND COLD WATER TO HW AND CW IN WALL. CONNECT NEW 2"P-TRAP TO EXISTING 2"W ABOVE CEILING BELOW. SEE PLUMBING FIXTURE SCHEDULE ON DRAWING P3.101.
5. BATHTUB AND SURROUND (BY OTHERS). INSTALL NEW SHOWER HEAD, MIXING VALVE, TUB SPOUT AND TRIP LEVER BATHTUB DRAIN. CONNECT 1/2"HOT AND COLD WATER TO HW AND CW IN WALL. CONNECT NEW 2"W TO EXISTING 2"W ABOVE CEILING BELOW. SEE PLUMBING FIXTURE SCHEDULE ON DRAWING P3.101.

ALTERNATE NO.1

6. FD1 FLOOR DRAIN: PROVIDE NEW 2"WASTE AND TRAP WITH 1-1/2"VENT - CONNECT NEW 2"W AND 1-1/2"V TO EXISTING 4"SOIL STACK (ABOVE CEILING BELOW) AND 4"VENT STACK (ABOVE FLOOD LEVEL OF DRAIN), RESPECTIVELY, AT NEAREST CHASE. SEE DRAIN SCHEDULE ON DRAWING P3.101.

TectonArchitects | inc
1 Hartford Sq. West, Hartford CT 06106
860 548 0802
17 Railroad Avenue, Westerly RI 02891
401 596 7555
tectonarchitects.com

Notice:
This drawing is the property of Tecton Architects | inc This use, re-use or reproduction of this drawing for any purpose whatsoever without an expressed written agreement between Tecton Architects | inc and the user is prohibited. Rights to use the information on this sheet are not transferred until payment has been received for services rendered. Any rights so granted are non-transferable to other parties without the prior expressed written consent of Tecton Architects | inc

© 2012 Tecton Architects | inc

Consultant

Owner
THE UNIVERSITY OF RHODE ISLAND
THINK BIG WE DO

Project
University of Rhode Island
ALDRICH HALL
BATHROOM RENOVATIONS & DOOR & SIGNAGE REPLACEMENT
KINGSTON, RI

Key Plan

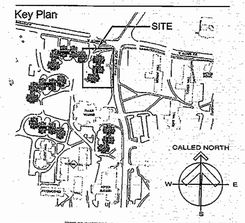

Seals

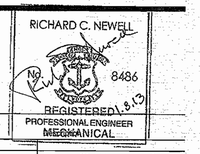

Issues

Date	
12/20/2012	CONSTRUCTION DOCUMENTS

Revisions

No.	Date	Description

Drawing Title
GROUND, SECOND THIRD, & FOURTH FLOOR PLANS PLUMBING

Issue Date:	12/20/2012
Project No: URI16IN	Scale: AS NOTED
Project Manager: WMS	Production Leader: MS
Project Architect: MT	Peer Reviewer: RGN

Drawing Number
P2.201

CEC# 2012126

PLUMBING FIXTURE SCHEDULE

SYMBOL	DESCRIPTION	CONNECTIONS WASTE	CONNECTIONS VENT	CONNECTIONS HOT WATER	CONNECTIONS COLD WATER	FIXTURE	FITTINGS	REMARKS
P1	TANK TYPE WATER CLOSET	4"	2"	–	1/2"	KOHLER # 3880	USE METAL CLOSET FLANGE – SECURE FLANGE TO CONCRETE FLOOR	VITREOUS CHINA, FLOOR MOUNTED, TANK TYPE WATER CLOSET WITH ROUND RIM WITH MATCHING ROUND SOFTCLOSE SEAT AND COVER #K–4658. 1.6 GALLON GALLONS PER FLUSH. PROVIDE "MCGUIRE" HEAVY DUTY STOP AND CHROME PLATED SUPPLY. VERIFY EXISTING ROUGH–IN WASTE DIMENSION MATCHES NEW ROUGH–IN WASTE DIMENSION BEFORE ORDERING FIXTURE.
P2	WALL HUNG LAVATORY	1–1/2"	1–1/2"	1/2"	1/2"	TOTO # LT307.4	SYMMONS # S–250–LWG	VITREOUS CHINA, WALL HUNG LAVATORY. CHROME PLATED, SINGLE LEVER, 4" CENTERS FAUCET FLOWING AT 2.2 GPM. PROVIDE POP UP DRAIN WITH LIFT ROD. PROVIDE "MCGUIRE" HEAVY DUTY STOPS, SUPPLIES, TRAP & TAILPIECE.
P3	COUNTERTOP LAVATORY	1–1/2"	1–1/2"	1/2"	1/2"	SOLID SURFACE COUNTER WITH INTEGRAL BOWL(S) (BY OTHERS)	SYMMONS # S–250–LWG	SOLID SURFACE COUNTER WITH INTEGRAL BOWL(S) (BY OTHERS). CHROME PLATED, SINGLE LEVER, 4" CENTERS FAUCET FLOWING AT 2.2 GPM. PROVIDE POP UP DRAIN. PROVIDE "MCGUIRE" HEAVY DUTY STOPS, SUPPLIES, TRAP & TAILPIECE.
P4	SHOWER	2"	2"	1/2"	1/2"	SHOWER BASE & SURROUND (BY OTHERS)	SYMMONS # S–96–1–X FD1 – SEE SCHEDULE	SHOWER BASE & SURROUND BY OTHERS. SHOWER CONTROLS WITH INTEGRAL STOPS.
P5	BATHTUB	2"	2"	1/2"	1/2"	BATHTUB & SURROUND (BY OTHERS)	SYMMONS # S–96–2–X WATCO # 501TL	BATHTUB & SURROUND BY OTHERS. SHOWER / BATHTUB CONTROLS WITH INTEGRAL STOPS AND DIVERTER. INCLUDE TRIP LEVER BATHTUB DRAIN.

FLOOR DRAIN AND CLEANOUT SCHEDULE

TYPE	SIZE	LOCATION	MODEL #	REMARKS
FD1 ☒	2"	SHOWERS AND ALTERNATE NO. 1	ZURN # ZN–415–S–EF–DP–VP	DURA–COATED CAST IRON BODY W/ BOTTOM OUTLET, 6" TYPE "S" DECORATIVE POLISHED NICKLE BRONZE STRAINER, VANDAL–PROOF SECURED TOP. COORDINATE INSTALLATION W/ COPPER PAN. ALTERNATE NO. 1 SHALL INCLUDE 2" "SURE SEAL" NEOPRENE TRAP SEAL SET IN FLOOR DRAIN.

PLUMBING LEGEND

SYMBOL	ABBR.	DESCRIPTION
	S/W	SOIL/WASTE PIPE BELOW SLAB
	V	VENT PIPE BELOW SLAB
	S/W	SOIL/WASTE PIPE ABOVE SLAB
	V	VENT PIPE ABOVE FLOOR SLAB
	CW	COLD WATER PIPE
	HW	HOT WATER PIPE
	HWR	HOT WATER RETURN PIPE
		REMOVE EXISTING PLUMBING FIXTURE
☒	FD	FLOOR DRAIN – SEE SCHEDULE
	CTE	CONNECT TO EXISTING
P1		PLUMBING FIXTURE DESIGNATION
1		DEMOLITION KEYED NOTE
1		NEW WORK KEYED NOTE
	ETR	EXISTING TO REMAIN
	VIF	VERIFY LOCATION, SIZE & FLOW IN FIELD
	TYP	TYPICAL

Tecton Architects | inc
1 Hartford Sq. West, Hartford CT 06106
860 548 0802
17 Railroad Avenue, Westerly RI 02891
401 596 7555
tectonarchitects.com

Notice:
This drawing is the property of Tecton Architects | inc The use, re-use or reproduction of this drawing for any purpose whatsoever without an expressed written agreement between Tecton Architects | inc and the user is prohibited. Rights to use the information on this sheet are not transferred until payment has been received for services rendered. Any rights so granted are non-transferable to other parties without the prior expressed written consent of Tecton Architects | inc

© 2012 Tecton Architects | inc

Consultant

Owner
THE UNIVERSITY OF RHODE ISLAND
THINK BIG WE DO

Project
University of Rhode Island
ALDRICH HALL
BATHROOM RENOVATIONS & DOOR & SIGNAGE REPLACEMENT
KINGSTON, RI

Key Plan

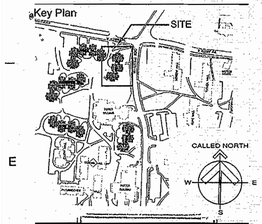

Seals

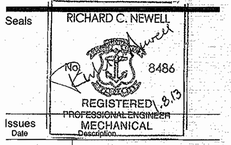

Issues

Date	Description
12/20/2012	CONSTRUCTION DOCUMENTS

Revisions

No.	Date	Description

Drawing Title
LEGEND AND SCHEDULES - PLUMBING

Issue Date:	12/20/2012		
Project No:	URI16IN	Scale:	AS NOTED
Project Manager:	WMS	Production Leader:	MS
Project Architect:	MT	Peer Reviewer:	RCN

Drawing Number
P3.101

CEC# 2012126

ELECTRICAL SYMBOL LEGEND

- FLUORESCENT LIGHTING FIXTURE
- FLUORESCENT LIGHTING FIXTURE
- S — SINGLE POLE SWITCH
- (S) — FIRE ALARM STROBE ONLY
- DUPLEX RECEPTACLE

SHEET NOTES:

1. REMOVE EXISTING FIRE ALARM STROBE ONLY DEVICE AND BACKBOX, AND REINSTALL IN SAME LOCATION ON NEW SURFACE. PROVIDE ALL NECESSARY HARDWARE AND ALL FINAL TERMINATIONS.
2. REMOVE EXISTING WALL MOUNTED 4' LINEAR FLUORESCENT AND REPLACE WITH NEW MERCURY LIGHTING #MP38-WW-232-AFW-ELB-HP-UNI. PROVIDE ALL NECESSARY HARDWARE AND ALL FINAL TERMINATIONS.
3. REMOVE EXISTING SINGLE POLE WALL SWITCH AND COVERPLATE AND REPLACE WITH NEW. PROVIDE ALL NECESSARY HARDWARE AND ALL FINAL TERMINATIONS.
4. REMOVE EXISTING SURFACE MOUNTED CEILING LIGHT FIXTURE AND REPLACE WITH NEW MERCURY LIGHTING #M66-213-PL-11-120V-TP-DL. PROVIDE ALL NECESSARY HARDWARE AND ALL FINAL TERMINATIONS.
5. REMOVE EXISTING GFI RECEPTACLE AND COVERPLATE, COUNTERTOP HEIGHT WIREMOLD BOX, AND (2)#12 & (1)#12G IN SURFACE MOUNTED WIREMOLD EXTENDING FROM EXISTING LIGHT FIXTURE, AND REPLACE WITH NEW. MOUNT NEW OUTLET AT 6" ABOVE COUNTERTOP. TERMINATE NEW WIRING TO EXISTING. PROVIDE ALL NECESSARY HARDWARE AND ALL FINAL TERMINATIONS.
6. REMOVE EXISTING WALL MOUNTED 18" LINEAR FLUORESCENT AND REPLACE WITH NEW MERCURY LIGHTING #MP38-WW-217-AFW-ELB-HP-UNI. PROVIDE ALL NECESSARY HARDWARE AND ALL FINAL TERMINATIONS.

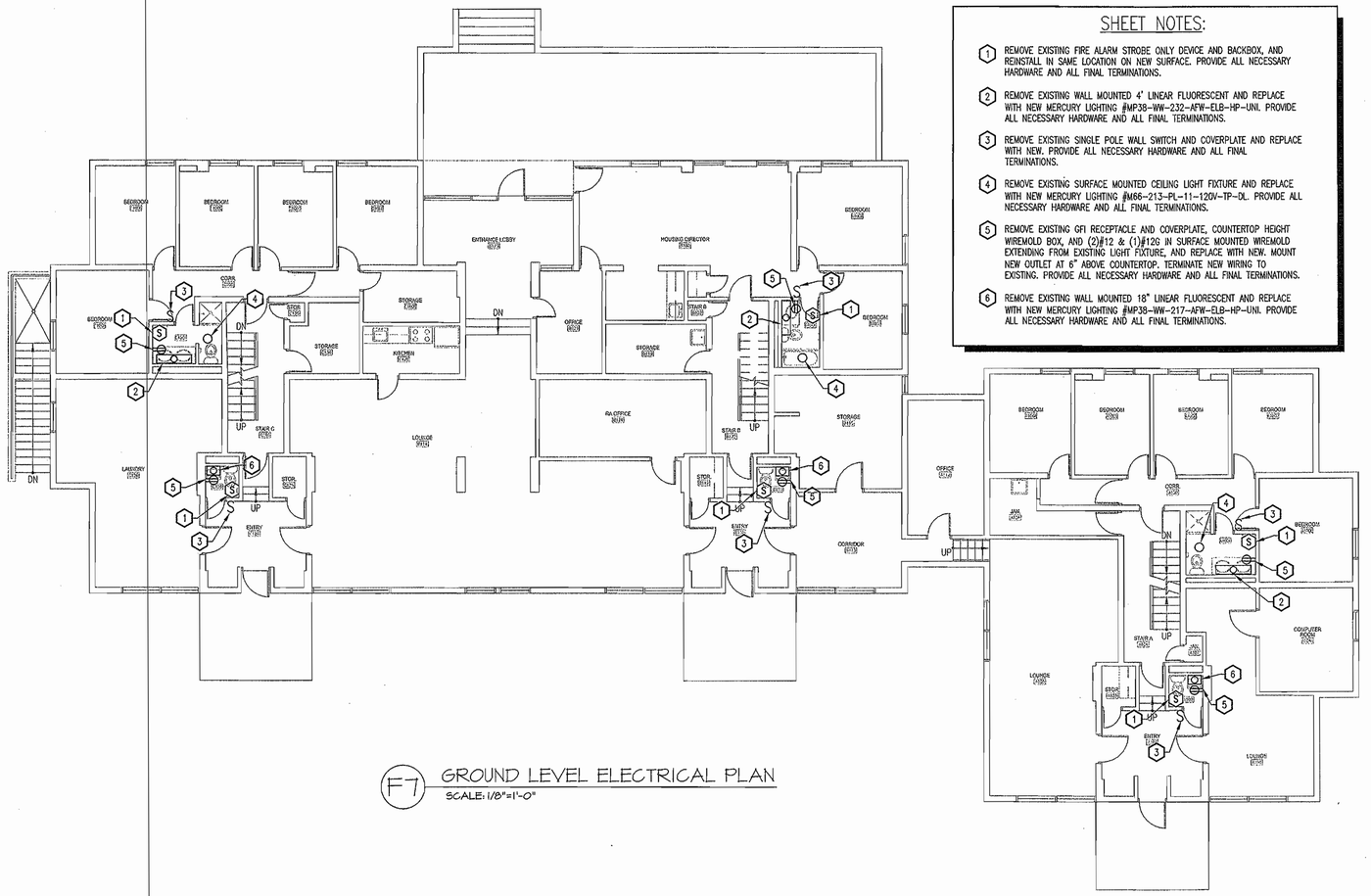

F7 GROUND LEVEL ELECTRICAL PLAN
SCALE: 1/8"=1'-0"

TectonArchitects | inc
1 Hartford Sq. West, Hartford CT 06106
860 548 0802
17 Railroad Avenue, Westerly RI 02891
401 596 7555
tectonarchitects.com

Notice:
This drawing is the property of Tecton Architects | Inc The use, re-use or reproduction of this drawing for any purpose whatsoever without an expressed written agreement between Tecton Architects | Inc and the user is prohibited. Rights to use the information on this sheet are not transferred until payment has been received for services rendered. Any rights so granted are non-transferable to other parties without the prior expressed written consent of Tecton Architects | Inc

©2012 Tecton Architects | inc

Consultant

Owner
THE UNIVERSITY OF RHODE ISLAND
THINK BIG WE DO

Project
University of Rhode Island
ALDRICH HALL
BATHROOM RENOVATIONS & DOOR & SIGNAGE REPLACEMENT
KINGSTON, RI

Key Plan

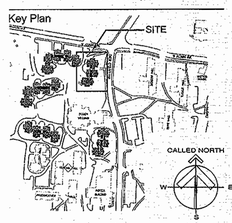

Seals

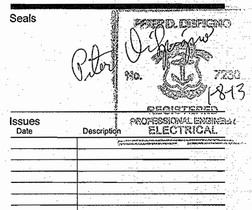

Issues

Date	Description
12/20/2012	CONSTRUCTION DOCUMENTS

Revisions

No.	Date	Description

Drawing Title

GROUND LEVEL ELECTRICAL PLAN

Issue Date:	12/20/2012
Project No: URI16IN	Scale: AS NOTED
Project Manager: WMS	Production Leader: WMS
Project Architect:	Peer Reviewer: PDS

Drawing Number

E2.101

CEC# 2012126

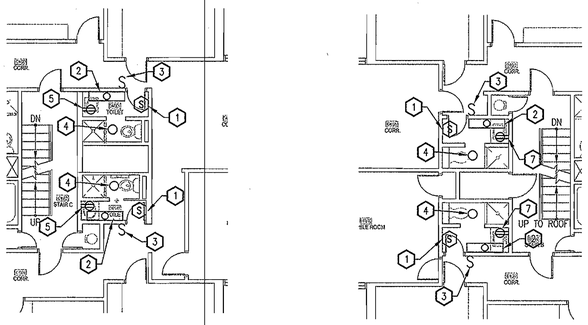

C9 FOURTH FLOOR PARTIAL ELECTRICAL PLANS
SCALE: 1/8"=1'-0"

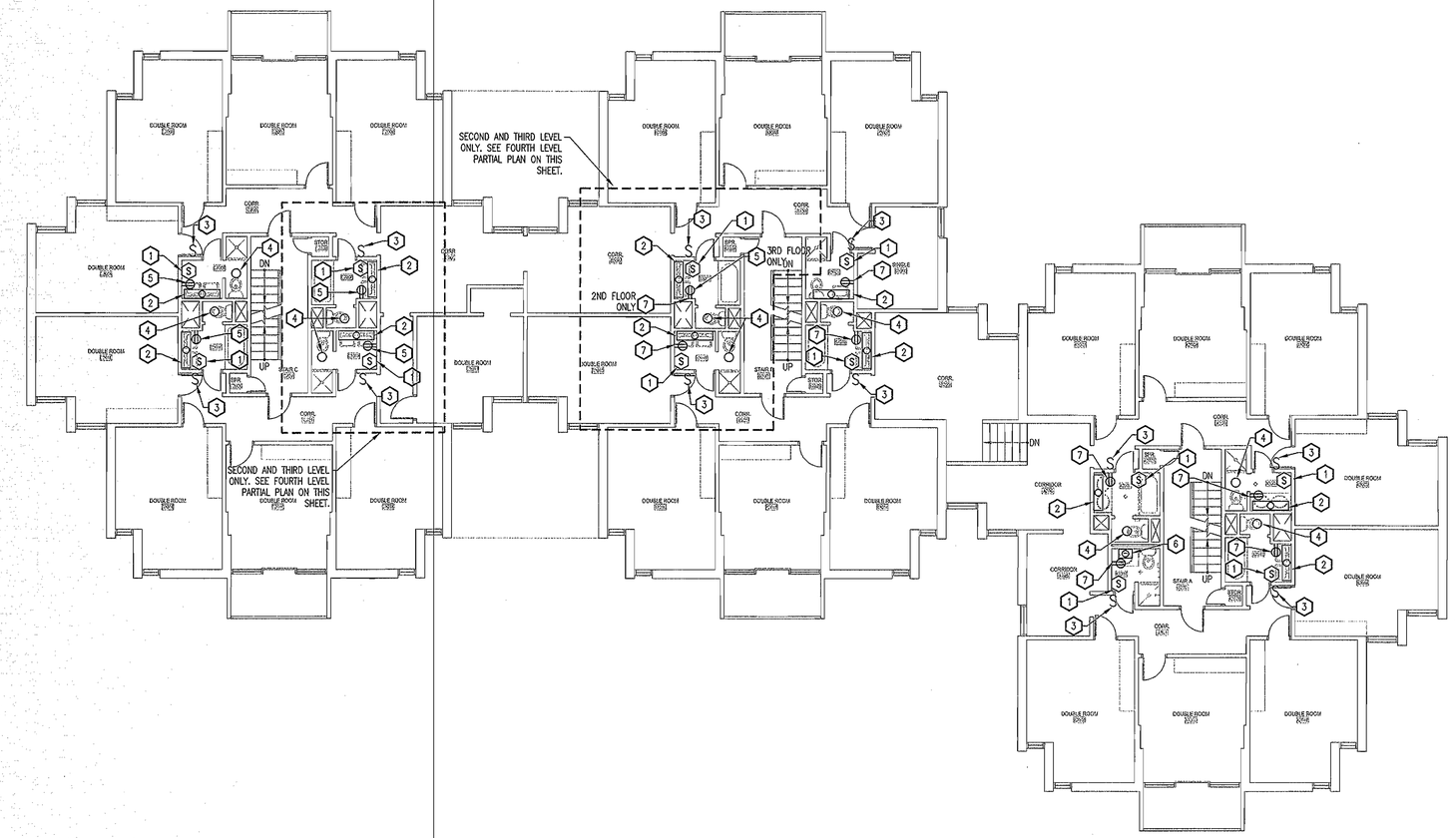

G9 SECOND, THIRD, FOURTH LEVEL ELECTRICAL PLAN -FOURTH LEVEL TOWERS "B" AND "C" SIMILAR, SEE PARTIAL PLAN ON THIS SHEET
SCALE: 1/8"=1'-0"

SHEET NOTES:

1. REMOVE EXISTING FIRE ALARM STROBE ONLY DEVICE AND BACKBOX, AND REINSTALL IN SAME LOCATION ON NEW SURFACE. PROVIDE ALL NECESSARY HARDWARE AND ALL FINAL TERMINATIONS.
2. REMOVE EXISTING WALL MOUNTED 4' LINEAR FLUORESCENT AND REPLACE WITH NEW MERCURY LIGHTING #MP38-WW-232-AFW-ELB-HP-UNI. PROVIDE ALL NECESSARY HARDWARE AND ALL FINAL TERMINATIONS.
3. REMOVE EXISTING SINGLE POLE WALL SWITCH AND COVERPLATE AND REPLACE WITH NEW. PROVIDE ALL NECESSARY HARDWARE AND ALL FINAL TERMINATIONS.
4. REMOVE EXISTING SURFACE MOUNTED CEILING LIGHT FIXTURE AND REPLACE WITH NEW MERCURY LIGHTING #M65-213-PL-11-120V-TP-DL. PROVIDE ALL NECESSARY HARDWARE AND ALL FINAL TERMINATIONS.
5. PROVIDE NEW GFI RECEPTACLE AND COVERPLATE IN NEW SURFACE MOUNTED IVORY WIREMOLD BOX. MOUNT AT 6" ABOVE COUNTERTOP. PROVIDE NEW (2)#12 & (1)#12G, IN NEW SURFACE MOUNTED 500 SERIES STEEL IVORY WIREMOLD, FROM NEW LIGHT FIXTURE TO NEW GFI OUTLET. TERMINATE NEW WIRING TO EXISTING LIGHTING SWITCHLEG. PROVIDE ALL NECESSARY HARDWARE AND ALL FINAL TERMINATIONS.
6. REMOVE EXISTING WALL MOUNTED 18" LINEAR FLUORESCENT AND REPLACE WITH NEW MERCURY LIGHTING #MP38-WW-217-AFW-ELB-HP-UNI. PROVIDE ALL NECESSARY HARDWARE AND ALL FINAL TERMINATIONS.
7. REMOVE EXISTING GFI RECEPTACLE AND COVERPLATE, COUNTERTOP HEIGHT WIREMOLD BOX, AND (2)#12 & (1)#12G IN SURFACE MOUNTED WIREMOLD EXTENDING FROM EXISTING LIGHT FIXTURE, AND REPLACE WITH NEW. MOUNT NEW OUTLET AT 6" ABOVE COUNTERTOP. TERMINATE NEW WIRING TO EXISTING. PROVIDE ALL NECESSARY HARDWARE AND ALL FINAL TERMINATIONS.

TectonArchitects | inc
1 Hartford Sq. West, Hartford CT 06106
860 548 0802
17 Railroad Avenue, Westerly RI 02891
401 596 7555
tectonarchitects.com

Notice:
This drawing is the property of Tecton Architects | Inc The use, re-use or reproduction of this drawing for any purpose whatsoever without an expressed written agreement between Tecton Architects | Inc and the user is prohibited. Rights to use the information on this sheet are not transferred until payment has been received for services rendered. Any rights so granted are non-transferable to other parties without the prior expressed written consent of Tecton Architects | Inc

©2012 Tecton Architects | Inc

Consultant

Owner
THE UNIVERSITY OF RHODE ISLAND
THINK BIG WE DO

Project
University of Rhode Island
ALDRICH HALL
BATHROOM RENOVATIONS & DOOR & SIGNAGE REPLACEMENT
KINGSTON, RI

Key Plan

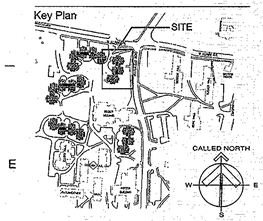

Seals

Issues

Date	Description
12/20/2012	CONSTRUCTION DOCUMENTS

Revisions

No.	Date	Description

Drawing Title
SECOND THRU FOURTH LEVEL ELECTRICAL PLAN

Issue Date:	12/20/2012
Project No: URI16IN	Scale: AS NOTED
Project Manager: WMS	Production Leader: WMS
Project Architect:	Peer Reviewer: PDS

Drawing Number
E2.102

CEC# 2012126

UNIVERSITY OF RHODE ISLAND

BURNSIDE HALL BATHROOM RENOVATION & DOOR & SIGNAGE REPLACEMENT

KINGSTON CAMPUS
KINGSTON, RHODE ISLAND

DRAWING LIST:

ARCHITECTURAL

G1.101	GENERAL INFORMATION
A2.100	REFERENCE FLOOR PLAN
A2.101	REFERENCE & DOOR DEMOLITION KEY PLAN
A2.102	REFERENCE & DOOR DEMOLITION KEY PLAN
A2.103	ENLARGED BATHROOM DEMOLITION FLOOR PLANS
A2.104	ENLARGED BATHROOM DEMOLITION FLOOR PLANS
A2.201	BATHROOM CONSTRUCTION FLOOR PLANS
A2.202	BATHROOM CONSTRUCTION FLOOR PLANS
A2.301	BATHROOM REFLECTED CEILING PLANS
A2.302	BATHROOM REFLECTED CEILING PLANS
A5.201	BATHROOM INTERIOR ELEVATIONS & DETAILS
A5.202	BATHROOM INTERIOR ELEVATIONS & DETAILS
A5.202	BATHROOM INTERIOR ELEVATIONS & DETAILS
A8.101	SIGN & DOOR SCHEDULE & DETAILS
A8.102	SIGN & DOOR SCHEDULE & DETAILS
A8.103	SIGN & DOOR SCHEDULE & DETAILS
A8.104	SIGN & DOOR SCHEDULE & DETAILS
A8.105	SIGNAGE & MOUNTING DETAILS

M.E.P.

P1.101	GROUND LEVEL FLOOR PLAN PLUMBING DEMOLITION
P1.102	SECOND THIRD & FOURTH FLOORS PLUMBING DEMOLITION
P2.201	GROUND LEVEL FLOOR PLAN PLUMBING
P2.202	SECOND THIRD & FOURTH FLOORS PLUMBING
P3.101	LEGEND AND SCHEDULES - PLUMBING
E2.101	GROUND LEVEL ELECTRICAL PLAN
E2.102	SECOND THRU FOURTH LEVEL ELECTRICAL PLAN

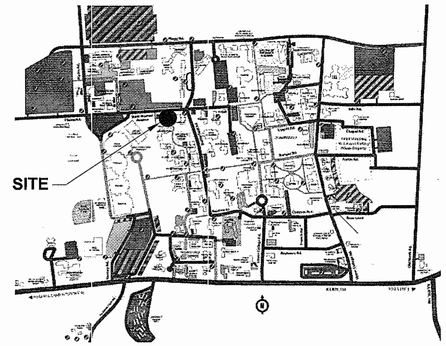

LOCATION PLAN

CREATIVE ENVIRONMENT CORP. CONSULTING ENGINEERS

50 OFFICE PARKWAY
EAST PROVIDENCE, RI 02914
TEL - 401 438 7733

TectonArchitects | inc
ONE HARTFORD SQUARE WEST
HARTFORD CONNECTICUT
TEL 860 548 0802
FAX 860 249 2531
www.tectonarchitects.com

TectonArchitects | inc
1 Hartford Sq. West, Hartford CT 06106
860 548 0802
17 Railroad Avenue, Westerly RI 02891
401 596 7555
tectonarchitects.com

Notice:
This drawing is the property of Tecton Architects | inc The use, re-use or reproduction of this drawing for any purpose whatsoever without an expressed written agreement between Tecton Architects | inc and the user is prohibited. Rights to use the information on this sheet are not transferred until payment has been received for services rendered. Any rights so granted are non-transferable to other parties without the prior expressed written consent of Tecton Architects | inc

© 2012 Tecton Architects | inc

Consultant

CREATIVE ENVIRONMENT CORP. CONSULTING ENGINEERS

Owner

THE UNIVERSITY OF RHODE ISLAND

THINK BIG WE DO

Project

University of Rhode Island
BURNSIDE HALL
BATHROOM RENOVATIONS &
DOOR & SIGNAGE REPLACEMENT

KINGSTON, RI

Key Plan

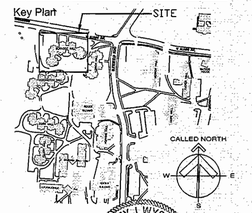

Seals

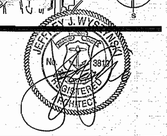

Issues

Date	Description
12/20/2012	FOR CONSTRUCTION

Revisions

No.	Date	Description
1	12/05/2012	REVIEW

Drawing Title

COVER

Issue Date: 12/20/2012

Project No:	KC.R.ROGW.2010.001	Scale:	AS NOTED
Project Manager:	MT	Production Leader:	MS
Project Architect:	MT	Peer Reviewer:	JM

Drawing Number

G0.0

ABBREVIATIONS

AB	ANCHOR BOLT
ACI	AMERICAN CONCRETE INSTITUTE
ACOUST	ACOUSTICAL
AC	AIR CONDITIONER
ADJ	ADJUSTABLE
AFF	ABOVE FINISH FLOOR
ALT	ALTERNATE
ALUM	ALUMINUM
ANCH	ANCHOR
ANOD	ANODIZED
ARCH	ARCHITECT
ASTM	AMERICAN SOCIETY FOR TESTING MATERIALS
BL	BUILDING LINE
BOC	BOTTOM OF CURB
BD	BOARD
BIT	BITUMINOUS
BLDG	BUILDING
BLK	BLOCK
BLKG	BLOCKING
BM	BEAM
BOF	BOTTOM OF FOOTING ELEVATION
BOT	BOTTOM
BRG	BEARING
BRK	BRICK
BTW	BETWEEN
BUR	BUILT UP ROOF
C	CENTER LINE
CAB	CABINET
CB	CATCH BASIN
CER	CERAMIC
CI	CAST IRON
CJ	CONTROL JOINT
CL	CLOSET
CLCB	CURBLESS CATCH BASIN
CTR	CENTER
CLG	CEILING
CLR	CLEAR (DIMENSION)
CM	CONTRACT MANAGER
CMU	CONCRETE MASONRY UNIT
CO	CLEAN OUT
COL	COLUMN
COMP	COMPACTED (COMPOSITION)
CONC	CONCRETE
CONST	CONSTRUCTION
CONT	CONTINUOUS
CONTR	CONTRACTOR
CORR	CORRUGATED
CP	CONTROL PANEL
CSG	CASING
CSMT	CASMENT
CT	CERAMIC TILE
CF	CUBIC FOOT
CY	CUBIC YARD
DF	DRINKING FOUNTIAN
DIA	DIAMETER
DIAG	DIAGONAL
DIM	DIMENSION
DL	DEAD LOAD
DN	DOWN
DR	DOOR
DS/C	DRIVE SIDE OF CURB
DTL	DETAIL
DWG	DRAWING
E	EAST
EJ	EXPANSION JOINT
EL	ELEVATION
ELEC	ELECTRICAL
ELEV	ELEVATOR
EQ	EQUAL
EQUIP	EQUIPMENT
ER	EMERGENCY ROOM
EST	ESTIMATE
EW	EACH WAY
EWC	ELECTRIC WATER COOLER
EXH	EXHUAST
EXIST	EXISTING
EXP	EXPANSION
EXPD	EXPANDED
EXT	EXTERIOR
FA	FRESH AIR
FAP	FIRE ALARM PANEL
FD	FLOOR DRAIN
FDN	FOUNDATION
FE	FIRE EXTINGUISHER
FEC	FIRE EXTINGUISHER CABINET
FHC	FIRE HOSE CABINET
FIN	FINISH
FL	FLOW LINE
FLR	FLOOR
FOF	FACE OF FINISH
F/F	FACE OF FOUNDATION WALL
FOM	FACE OF MASONRY
FOS	FACE OF STUD
FR	FIRE RATED
FS	FULL SIZE
FT	FOOT
FTG	FOOTING
FUR	FURRED (ING)
GA	GAUGE
GALV	GALVINIZED
GC	GENERAL CONTRACTOR
GEN	GENERAL
GL	GLASS
GLZ	GLAZE
GRD	GRADE
GYP	GYPSUM
HC	HANDICAP
HGT	HEIGHT
HM	HOLLOW METAL
HP	HIGH POINT
HDWD	HARDWOOD
H&V	HEATING & VENTILATING
HWH	HOT WATER HEATER
HVAC	HEATING, VENTILATING AND AIR CONDITIONING
ID	INSIDE DIAMETER
IN	INCH
INSUL	INSULATION
INT	INTERIOR
INV	INVERT
JAN	JANITOR
JST	JOIST
JT	JOINT
LAM	LAMINATE
LAV	LAVATORY
MAS	MASONRY
MAT	MATERIAL
MAX	MAXIMUM
MECH	MECHANICAL
MEM	MEMBRANE
MEP	MECHANICAL, ELECTRICAL, PLUMBING
METTP	METAL TOILET PARTITION
MFR	MANUFACTURER
MTL	METAL
MH	MANHOLE
MIN	MINIMUM
MISC	MISCELLANEOUS
MO	MASONRY OPENING
MULL	MULLION
N	NORTH
NAT	NATURAL
ND	NAPKIN DISPENSER
NEC	NECESSARY
NIC	NOT IN CONTRACT
NOM	NOMINAL
NRC	NOISE REDUCTION COEFFICIENT
NTS	NOT TO SCALE
OC	ON CENTER
OD	OUTSIDE DIAMETER
OF/C	OUTSIDE FACE OF CONCRETE
OH	OVERHEAD
OPG	OPENING
OPP	OPPOSITE
OR	OPERATING ROOM
PL	PROPERTY LINE
PBD	PARTICLE BOARD
PCF	POUNDS PER CUBIC FOOT
PLAM	PLASTIC LAMINATE
PLAS	PLASTER
PNL	PANEL
PSF	POUNDS PER SQUARE FOOT
PSI	POUNDS PER SQUARE INCH
PT	PAINT
PTD	PAINTED
PTN	PARTITION
PVC	POLYVINYL CHLORIDE
PLYWD	PLYWOOD
QT	QUARRY TILE
R	RADIUS OR RISER
R/A	RETURN AIR
RC	REINFORCED CONCRETE
RD	ROOF DRAIN
REF	REFERENCE
REFR	REFRIGERATOR
REINF	REINFORCE
REQ'D	REQUIRED
RGH	ROUGH
RL	RAIN LEADER
RM	ROOM
RQMT	REQUIREMENT
RO	ROUGH OPENING
ROW	RIGHT OF WAY
S	SOUTH OR SINK
SC	SOLID CORE
SCED	SCHEDULE
SF	SQUARE FOOT
SH	SHOWER OR SHELF
SHT	SHEET
SIM	SIMILAR
SL	SLIDING
SMR	SINGLE PLY MEMBRANE ROOF
SP/PT/FIN	SPECIAL PAINT FINISH
SPEC	SPECIFICATIONS
SPKR	SPEAKER
SQ	SQUARE
SSTL	STAINLESS STEEL
STA	STATION
STD	STANDARD
STL	STEEL
STOR	STORAGE
STRUCT	STUCTURAL
SUSP	SUSPEND (ED)
SYS	SYSTEM
T	TREAD
TB	TACKBOARD
TOC	TOP OF CURB
TEL	TELEPHONE
TEMP	TEMERATURE OR TEMPORARY
TERR	TERRAZZO
T/FRM	TOP OF FRAME
T&G	TONGUE & GROOVED
THLD	THRESHOLD
THK	THICK
TLT	TOILET
TR	TO REMAIN
TYP	TYPICAL
TOF	TOP OF FOUNDATION
TOW	TOP OF WALL ELEVATION
TOS	TOP OF STEEL ELEVATION
T/SLB	TOP OF SLAB
UH	UNIT HEATER
UL	UNDERWRITERS LABORATORIES, INC.
UOD	UNDERSIDE OF DECK
UON	UNLESS OTHERWISE NOTED
UR	URINAL
UV	UNIT VENTILATOR
VAR	VARIES OR VARIABLE
VB	VINYL BASE
VCT	VINYL COMPOSITION TILE
VERT	VERTICAL
VEST	VESTIBULE
VIF	VERIFY IN FIELD
VNR	VENEER
VOL	VOLUME
W	WEST OR WIDTH
W/	WITH
WC	WATER CLOSET
WD	WOOD
WDW	WINDOW
WGL	WIRE GLASS
WP	WEATHERPROOF (WATERPROOFING)
WWF	WELDED WIRE FABRIC

DOOR HARDWARE INSTALLATION DIMENSIONS

- ALL DIMENSIONS NOTED TO THE RIGHT ARE RECOMMENDED MANUFACTURER'S STANDARDS THAT MEET ANSI AND ADA REQUIREMENTS.
- DIMENSIONS TO THE RIGHT ARE INDUSTRY STANDARDS, ANY CONFLICTS BEWTWEEN ARCHITECTURAL DETAILS WITHIN DOCUMENTS, AND INDUSTRY STANDARD DIMENSIONS ARE TO BE REVIEWED WITH ARCHTECT PRIOR TO HARDWARE INSTALLATION.
- ALL DIMENSIONS NOTED ARE TAKEN FROM FINISH FLOOR TO CENTER LINE OF DEVICE.

* PUSH PLATE - 45" TO CENTERLINE.
* DOOR PULL - 42" TO CENTERLINE.
* KNOBS AND LEVERS - 38" TO 42" TO CENTERLINE OF DEVICE.
* HOSPITAL LATCHSET - 45 3/4" TO CENTERLINE OF LATCH BOLT.
* DEAD LOCK - 48" TO CENTERLINE.
* PANIC DEVICE - 42" TO CENTERLINE.

GRAPHIC SYMBOLS

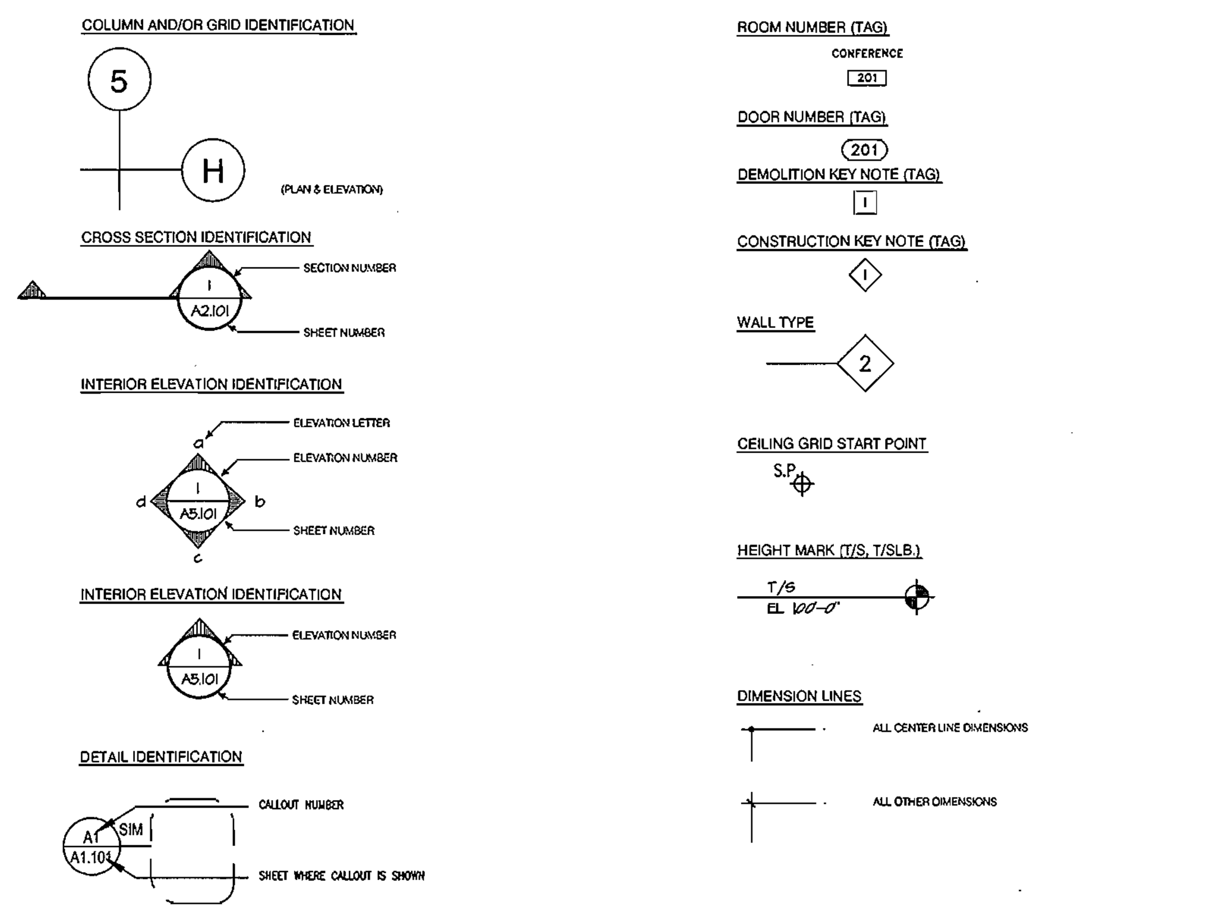

MATERIAL SYMBOLS

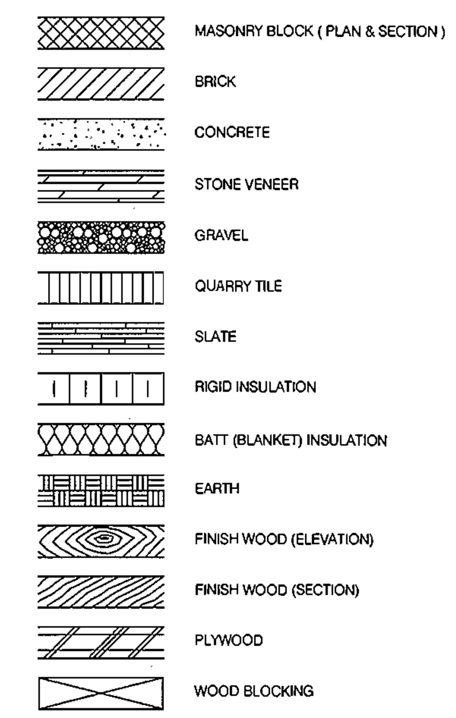

MANEUVERING CLEARANCES FOR ALL DOORS

NOTE:
ALL DOOR OPENINGS TO BE ABLE TO PASS A 32"Øx80"H CYLINDER. THIS INCLUDES HDWRE. MTD. ON DR.

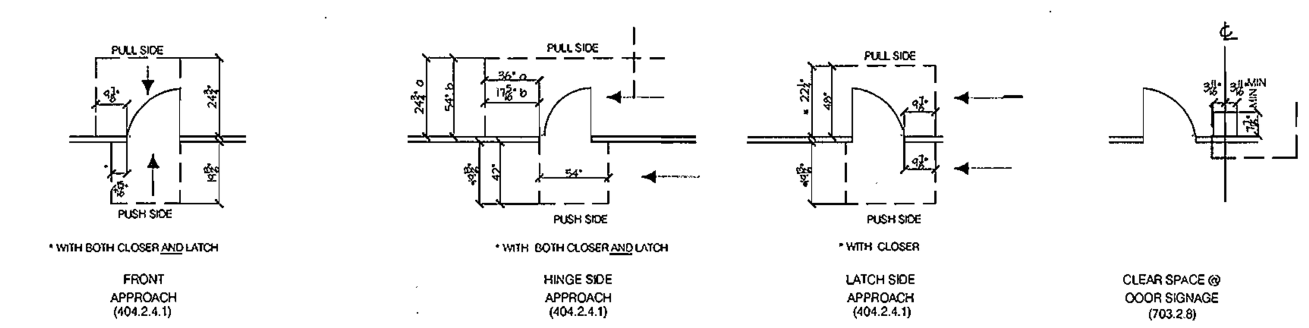

FIXTURE HEIGHTS

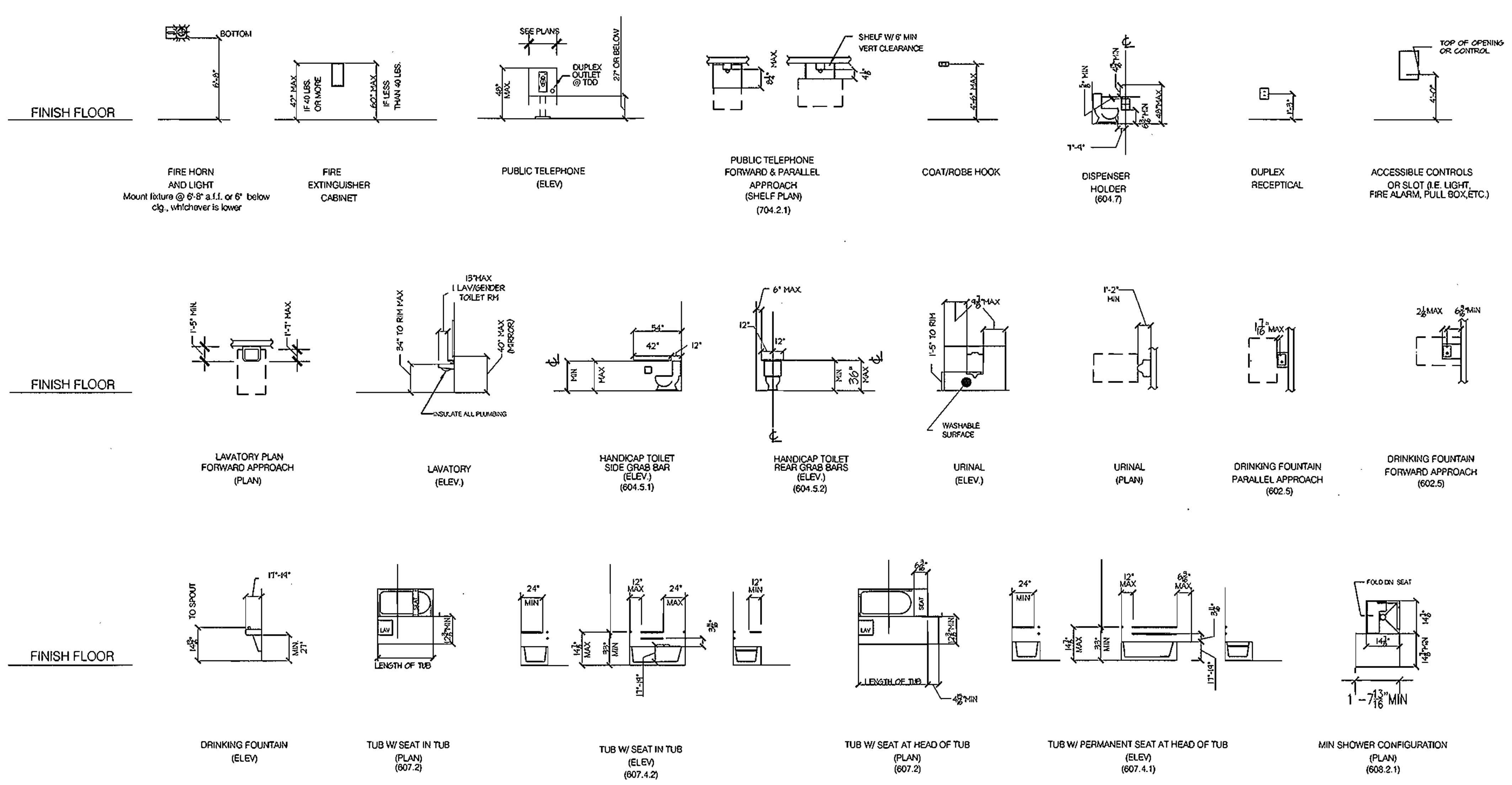

APPLICABLE CODES

1. 2002 RHODE ISLAND STATE REHABILITATION BUILDING AND FIRE CODES FOR EXISTING BUILDINGS AND STRUCTURES.
2. SBC-1 RHODE ISLAND STATE BUILDING CODE.
3. SBC-3 RHODE ISLAND STATE PLUMBING CODE.
4. SBC-4 RHODE ISLAND STATE MECHANICAL CODE.
5. SBC-5 RHODE ISLAND STATE ELECTRICAL CODE.
6. SBC-8 RHODE ISLAND STATE ENERGY CONSERVATION CODE.
7. RHODE ISLAND FIRE SAFETY CODE.
8. RHODE ISLAND FIRE PREVENTION CODE.
9. NFPA 101.
10. LIFE SAFETY CODE FOR EXISTING BUILDINGS.

GENERAL BUILDING INFORMATION

BURNSIDE RESIDENCE HALL BUILDING INFORMATION

OCCUPANCY USE:	R2 – RESIDENTIAL DORMITORY
EXISTING CONSTRUCTION TYPE:	IIA
FLOOR AREA:	VARIES
TOTAL FLOOR AREA:	49,288 S.F.
HEIGHT:	4 STORIES AND BASEMENT
FIRE SUPPRESSION SYSTEM	FULLY SPRINKLERED
FIRE ALARM:	YES
FIRE RATING:	CORRIDOR WALLS 30 MIN. BATHROOM DOORS 20 MIN.
ACCESSIBILITY:	NO

ALTERNATE BIDS

1. FLOOR DRAINS @ ALL BATHROOMS ON SECOND, THIRD & FOURTH FLOORS
2. REPLACE ALL DOORS AT EXTERIOR; BEDROOMS, BATHROOMS, OFFICES AND STORAGE AS PER DOOR SCHEDULE.

NOTE: REPLACEMENT OF BATHROOM DOORS IS PART OF BASE BID.

ALLOWANCES

1. MODIFICATION OF FRAME MORTISES DUE TO ADJUSTMENTS FOR NEW HARDWARE AND REPAIR OF CORRODED FRAMES (BOTTOM) WITH BONDO & SAND SMOOTH. $20,000 PER BLDG. = $120,000
2. ADJUSTMENT TO DOOR UNDERCUTS DUE TO FLOOR SETTLEMENT. $10,000 PER BLDG. = $60,000
3. APPLICATION OF METAL LATH AND PLASTER OF BATHROOM WALLS TO PATCH DUE TO HIDDEN DAMAGE. $20,000 PER BLDG. = $120,000

KEY PLAN

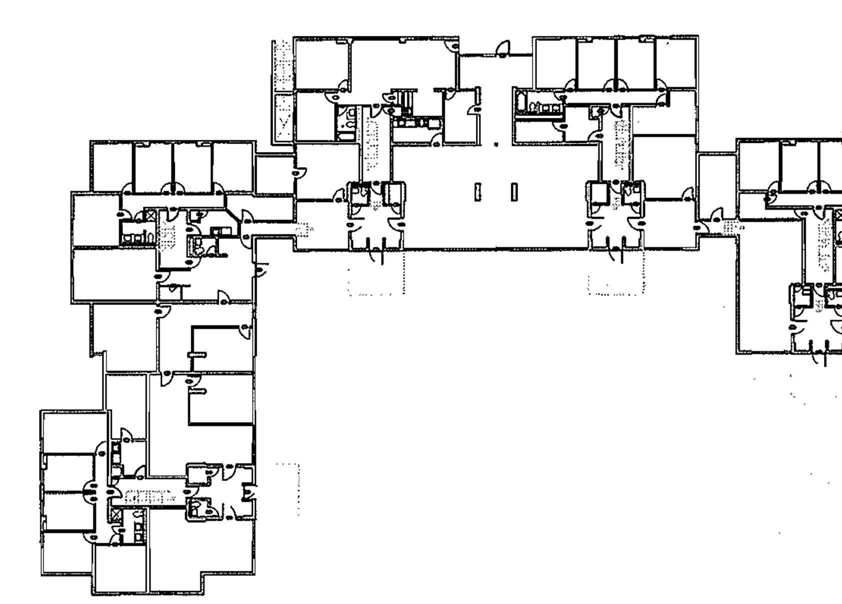

TectonArchitects | inc
1 Hartford Sq. West, Hartford CT 06106
860 548 0802
17 Railroad Avenue, Westerly RI 02891
401 596 7555
tectonarchitects.com

Notice:
This drawing is the property of Tecton Architects | inc The use, re-use or reproduction of this drawing for any purpose whatsoever without an expressed written agreement between Tecton Architects | inc and the user is prohibited. Rights to use the information on this sheet are not transferred until payment has been received for services rendered. Any rights so granted are non-transferable to other parties without the prior expressed written consent of Tecton Architects | inc

© 2012 Tecton Architects | inc

Consultant

Owner
THE UNIVERSITY OF RHODE ISLAND
THINK BIG WE DO

Project
University of Rhode Island
BURNSIDE HALL
BATHROOM RENOVATIONS & DOOR & SIGNAGE REPLACEMENT
KINGSTON, RI

Key Plan

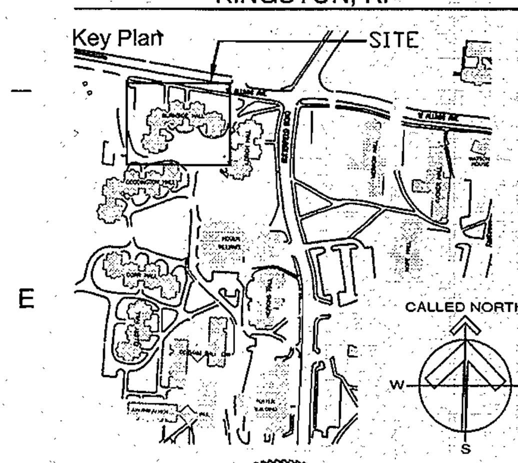

Seals

Issues

Date	Description
12/20/2012	FOR CONSTRUCTION

Revisions

No.	Date	Description
1	12/05/2012	REVIEW

Drawing Title

GENERAL INFORMATION

Issue Date:	12/20/2012		
Project No:	KC.R.ROGW. 2010.001	Scale:	AS NOTED
Project Manager:	MT	Production Leader:	MS
Project Architect:	MT	Peer Reviewer:	JM

Drawing Number

G0.101

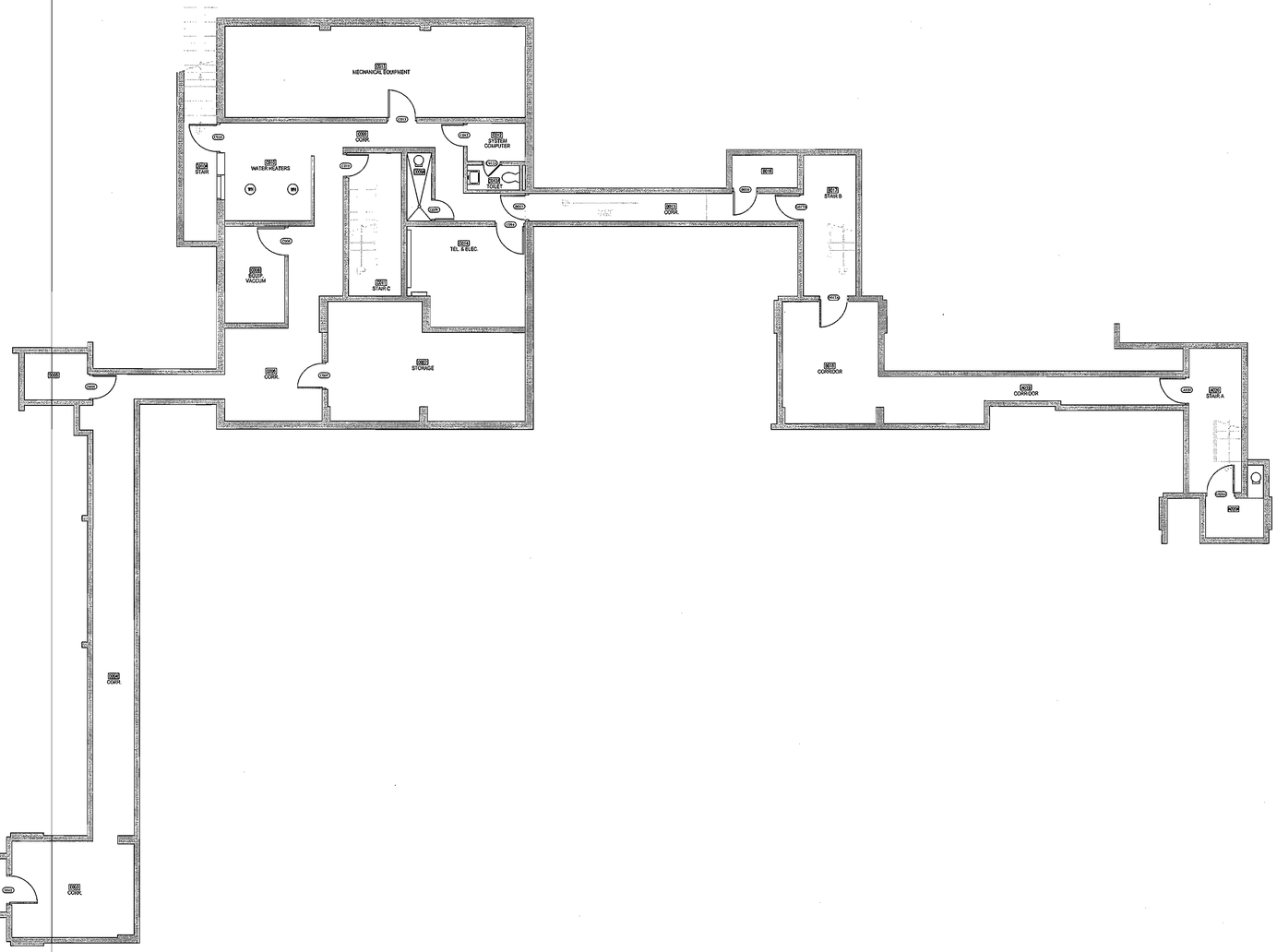

WORK IN BASEMENT LIMITED TO REPLACEMENT OF PLUMBING RISERS AND DRAINS FROM FLOOR ABOVE.

BASEMENT REFERENCE FLOOR PLAN
SCALE: 1/8"=1'-0"

TectonArchitects | inc
1 Hartford Sq. West, Hartford CT 06106
860 548 0802
17 Railroad Avenue, Westerly RI 02891
401 596 7555
tectonarchitects.com

Notice:
This drawing is the property of Tecton Architects | inc The use, re-use or reproduction of this drawing for any purpose whatsoever without an expressed written agreement between Tecton Architects | inc and the user is prohibited. Rights to use the information on this sheet are not transferred until payment has been received for services rendered. Any rights so granted are non-transferable to other parties without the prior expressed written consent of Tecton Architects | inc

© 2012 Tecton Architects | inc

Consultant

Owner
THE UNIVERSITY OF RHODE ISLAND
THINK BIG WE DO

Project
University of Rhode Island
BURNSIDE HALL
BATHROOM RENOVATIONS & DOOR & SIGNAGE REPLACEMENT

KINGSTON, RI

Key Plan

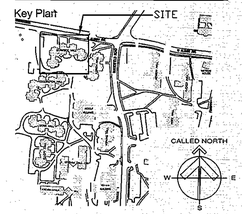

Seals

Issues

Date	Description
12/20/2012	FOR CONSTRUCTION

Revisions

No.	Date	Description
1	12/05/2012	REVIEW

Drawing Title

REFERENCE FLOOR PLAN

Issue Date:	12/20/2012
Project No: KC.R.ROGW.2010.001	Scale: AS NOTED
Project Manager: MT	Production Leader: MS
Project Architect: MT	Peer Reviewer: JM

Drawing Number

A2.100

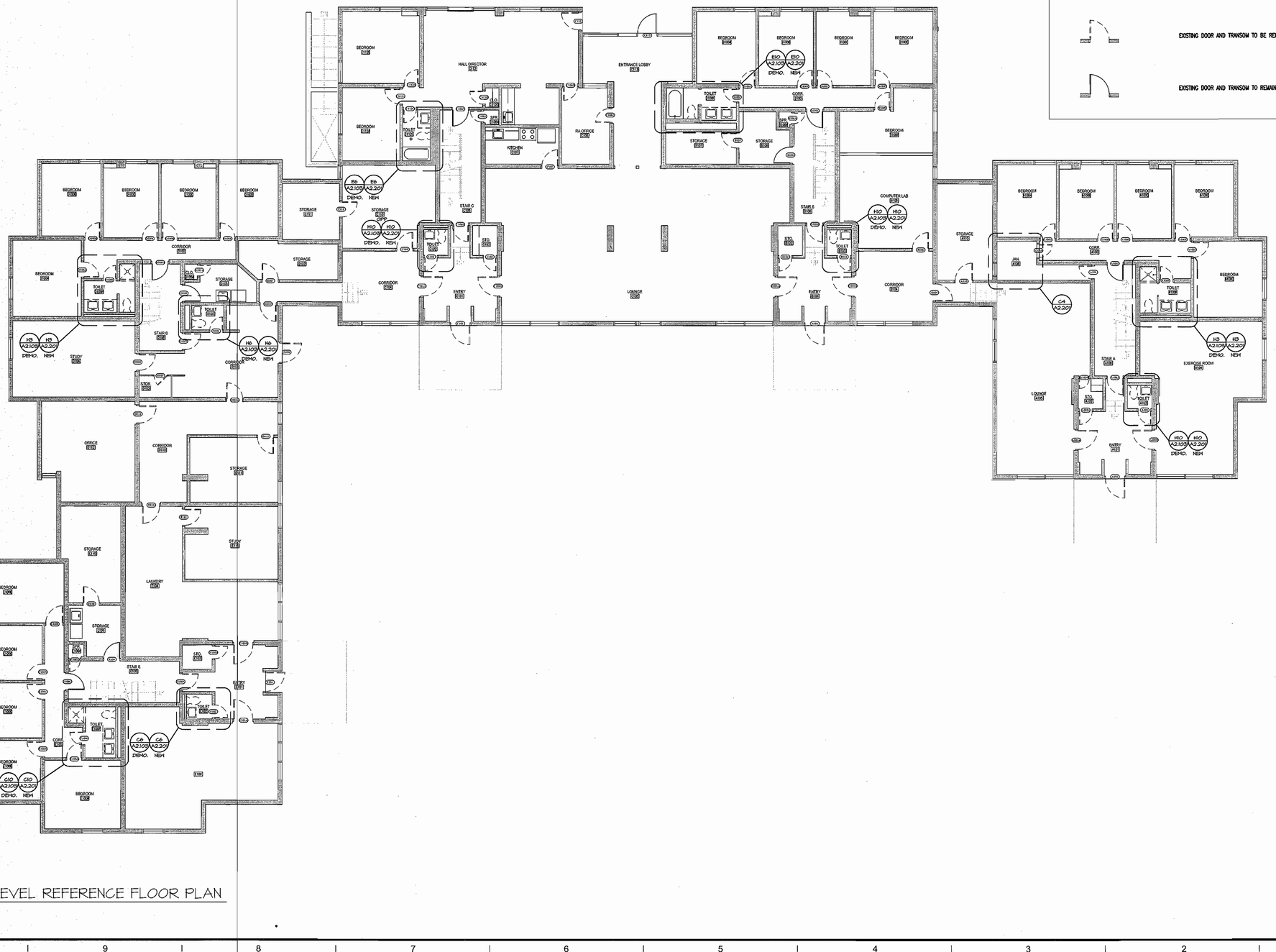

GENERAL DEMOLITION NOTES

1. COORDINATE ALL DEMOLITION WITH NEW CONSTRUCTION REQUIREMENTS
2. THE CONTRACTOR SHALL BE RESPONSIBLE FOR THE REMOVAL & LAWFUL DISPOSAL OF ALL MATERIALS AS DESCRIBED.
3. PROVIDE TEMPORARY SURFACE PROTECTION DURING REMOVAL OF ITEMS. CONTRACTOR IS RESPONSIBLE FOR ANY SURFACE/FLOOR/FINISH DAMAGE THAT MAY OCCUR.
4. MECHANICAL, ELECTRICAL AND OR OTHER WORK RELATED TO A WALL OR AREA SCHEDULED FOR DEMOLITION AND REMOVAL SHALL BE PERFORMED WETHER SO NOTED OR NOT. PROTECT ALL ITEMS INTENDED FOR SALVAGE AND REUSE OR SCHEDULED TO REMAIN.
5. WHERE DOORS AND TRANSOMS ARE SHOWN TO BE DEMOLISHED FRAMES ARE TO REMAIN. PATCH AND REPAIR ANY DAMAGE TO EXISTING DOOR FRAME AND PREPARE FOR INSTALLATION OF NEW DOOR AND TRANSOM. COORDINATE WITH DOOR SCHEDULE.
6. REMOVE EXISTING WALL TILE IN BATHTUB STALL.
7. REMOVE EXISTING F.R.P. WALL PANELS IN ALL (E) TOWER BATHROOMS AT ALL LEVELS.
8. REMOVE & DISPOSE OF ALL EXISTING BATHROOM CEILINGS.
9. REMOVE & DISPOSE OF RUBBER COVE AT ALL BATHROOM WALLS AND BATHTUB SKIRTS.

DEMOLITION LEGEND

ITEM TO BE DEMOLISHED

EXISTING DOOR AND TRANSOM TO BE REMOVED (AS PER SCHEDULE)

EXISTING DOOR AND TRANSOM TO REMAIN (AS PER SCHEDULE)

GROUND LEVEL REFERENCE FLOOR PLAN

SCALE: 1/8"=1'-0"

TectonArchitects | inc

1 Hartford Sq. West, Hartford CT 06106
860 548 0802

17 Railroad Avenue, Westerly RI 02891
401 596 7555

tectonarchitects.com

Notice:
This drawing is the property of Tecton Architects | inc The use, re-use or reproduction of this drawing for any purpose whatsoever without an expressed written agreement between Tecton Architects | inc and the user is prohibited. Rights to use the information on this sheet are not transferred until payment has been received for services rendered. Any rights so granted are non-transferable to other parties without the prior expressed written consent of Tecton Architects | inc

© 2012 Tecton Architects | inc

Consultant

Creative Environments Corp. Consulting Engineers

Owner

THE UNIVERSITY OF RHODE ISLAND

THINK BIG WE DO

Project

University of Rhode Island
BURNSIDE HALL
BATHROOM RENOVATIONS & DOOR & SIGNAGE REPLACEMENT

KINGSTON, RI

Key Plan

Seals

Issues

Date	Description
12/20/2012	FOR CONSTRUCTION

Revisions

No.	Date	Description
1	12/05/2012	REVIEW

Drawing Title

REFERENCE & DOOR DEMOLITION FLOOR PLAN

Issue Date:	12/20/2012
Project No:	KC.R.ROGW 2010.001
Scale:	AS NOTED
Project Manager:	MT
Production Leader:	MS
Project Architect:	MT
Peer Reviewer:	JM

Drawing Number

A2.101

GENERAL DEMOLITION NOTES

1. COORDINATE ALL DEMOLITION WITH NEW CONSTRUCTION REQUIREMENTS
2. THE CONTRACTOR SHALL BE RESPONSIBLE FOR THE REMOVAL & LAWFUL DISPOSAL OF ALL MATERIALS AS DESCRIBED.
3. PROVIDE TEMPORARY SURFACE PROTECTION DURING REMOVAL OF ITEMS. CONTRACTOR IS RESPONSIBLE FOR ANY SURFACE/FLOOR/FINISH DAMAGE THAT MAY OCCUR.
4. MECHANICAL, ELECTRICAL AND OR OTHER WORK RELATED TO A WALL OR AREA SCHEDULED FOR DEMOLITION AND REMOVAL SHALL BE PERFORMED WETHER SO NOTED OR NOT. PROTECT ALL ITEMS INTENDED FOR SALVAGE AND REUSE OR SCHEDULED TO REMAIN.
5. WHERE DOORS AND TRANSOMS ARE SHOWN TO BE DEMOLISHED FRAMES ARE TO REMAIN. PATCH AND REPAIR ANY DAMAGE TO EXISTING DOOR FRAME AND PREPARE FOR INSTALLATION OF NEW DOOR AND TRANSOM. COORDINATE WITH DOOR SCHEDULE.
6. REMOVE EXISTING WALL TILE IN BATHTUB STALL.
7. REMOVE EXISTING F.R.P. WALL PANELS IN ALL (E) TOWER BATHROOMS AT ALL LEVELS.
8. REMOVE & DISPOSE OF ALL EXISTING BATHROOM CEILINGS.
9. REMOVE & DISPOSE OF RUBBER COVE AT ALL BATHROOM WALLS AND BATHTUB SKIRTS.

DEMOLITION LEGEND

ITEM TO BE DEMOLISHED

EXISTING DOOR AND TRANSOM TO BE REMOVED (AS PER SCHEDULE)

EXISTING DOOR AND TRANSOM TO REMAIN (AS PER SCHEDULE)

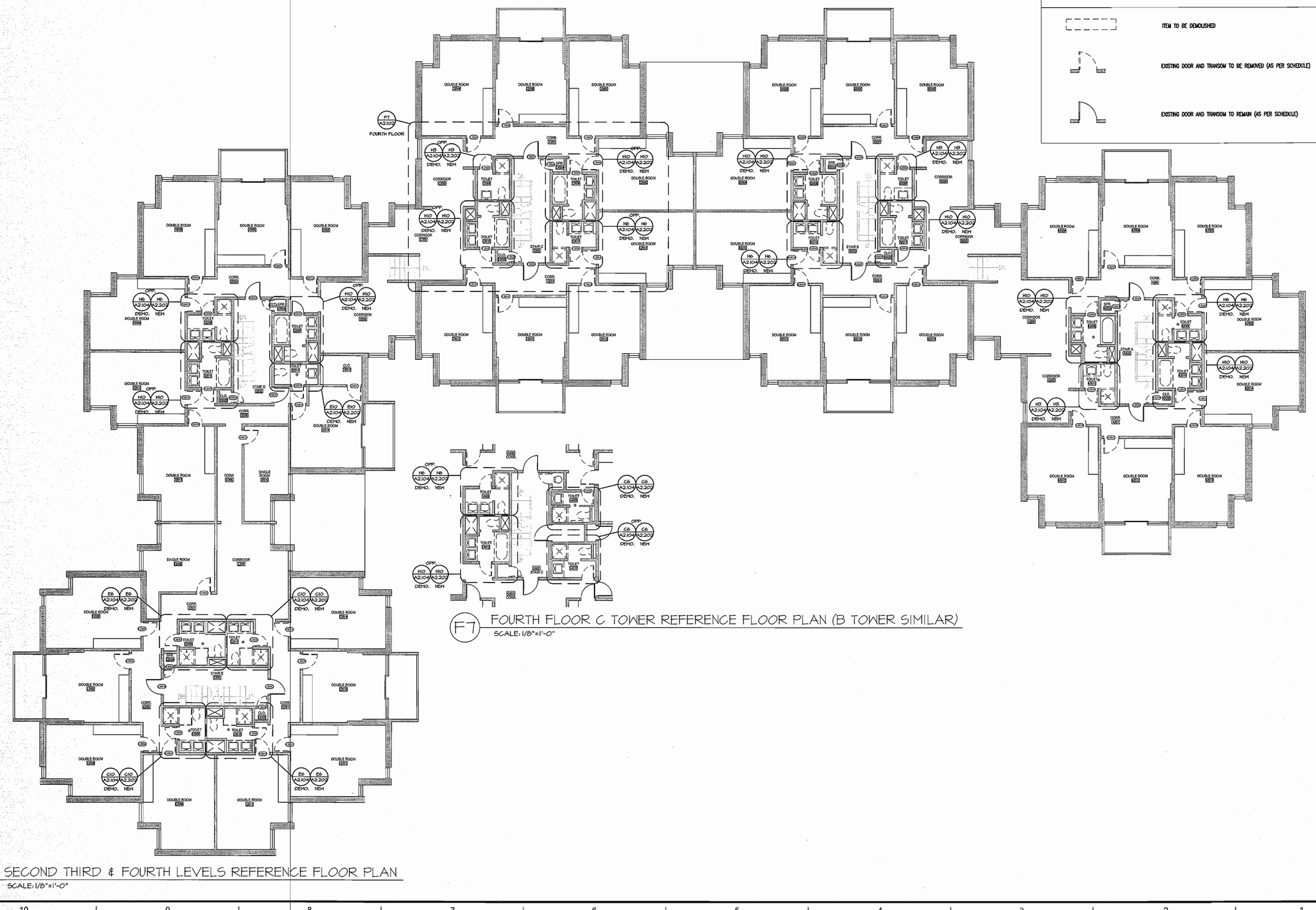

F7 FOURTH FLOOR C TOWER REFERENCE FLOOR PLAN (B TOWER SIMILAR)
SCALE: 1/8"=1'-0"

H10 SECOND THIRD & FOURTH LEVELS REFERENCE FLOOR PLAN
SCALE: 1/8"=1'-0"

TectonArchitects | inc

1 Hartford Sq. West, Hartford CT 06106
860 548 0802

17 Railroad Avenue, Westerly RI 02891
401 596 7555

tectonarchitects.com

Notice:
This drawing is the property of Tecton Architects | inc The use, re-use or reproduction of this drawing for any purpose whatsoever without an expressed written agreement between Tecton Architects | inc and the user is prohibited. Rights to use the information on this sheet are not transferred until payment has been received for services rendered. Any rights so granted are non-transferable to other parties without the prior expressed written consent of Tecton Architects | inc

© 2012 Tecton Architects | inc

Consultant

CREATIVE ENVIRONMENTS CORP. CONSULTING ENGINEERS

Owner

THE UNIVERSITY OF RHODE ISLAND

THINK BIG WE DO

Project

University of Rhode Island
BURNSIDE HALL
BATHROOM RENOVATIONS & DOOR & SIGNAGE REPLACEMENT

KINGSTON, RI

Key Plan

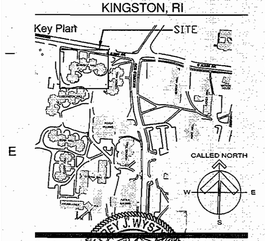

Seals

Issues

Date	Description
12/20/2012	FOR CONSTRUCTION

Revisions

No.	Date	Description
1	12/05/2012	REVIEW

Drawing Title

REFERENCE & DOOR DEMOLITION FLOOR PLAN

Issue Date: 12/20/2012

Project No:	KC.R.ROGW.2010.001	Scale:	AS NOTED
Project Manager:	MT	Production Leader:	MS
Project Architect:	MT	Peer Reviewer:	JM

Drawing Number

A2.102

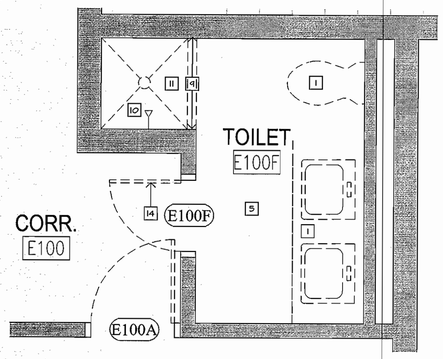

E10 BATHROOM DEMOLITION PLAN - (E100F)
SCALE: 1/2" = 1'-0"

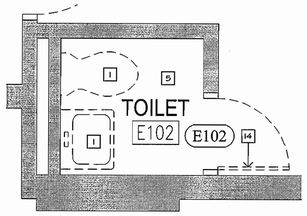

C6 BATHROOM DEMOLITION PLAN - (E102)
SCALE: 1/2" = 1'-0"

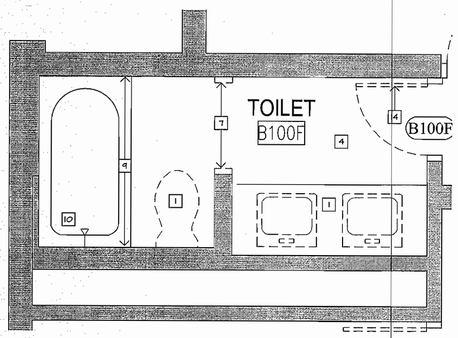

E10 BATHROOM DEMOLITION PLAN - (B100F)
SCALE: 1/2" = 1'-0"

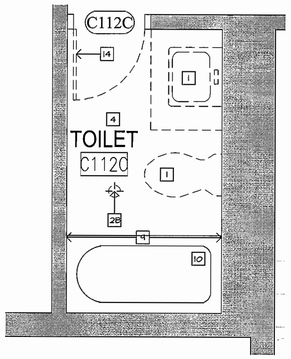

E6 BATHROOM DEMOLITION PLAN - (C112C)
SCALE: 1/2" = 1'-0"

GENERAL DEMOLITION NOTES

1. COORDINATE ALL DEMOLITION WITH NEW CONSTRUCTION REQUIREMENTS
2. THE CONTRACTOR SHALL BE RESPONSIBLE FOR THE REMOVAL & LAWFUL DISPOSING OF ALL MATERIALS AS DESCRIBED.
3. PROVIDE TEMPORARY SURFACE PROTECTION DURING REMOVAL OF ITEMS. CONTRACTOR IS RESPONSIBLE FOR ANY SURFACE/FLOOR/FINISH DAMAGE THAT MAY OCCUR.
4. MECHANICAL, ELECTRICAL AND OR OTHER WORK RELATED TO A WALL OR AREA SCHEDULED FOR DEMOLITION AND REMOVAL SHALL BE PERFORMED WETHER SO NOTED OR NOT. PROTECT ALL ITEMS INTENDED FOR SALVAGE AND REUSE OR SCHEDULED TO REMAIN.
5. WHERE DOORS AND TRANSOMS ARE SHOWN TO BE DEMOLISHED FRAMES ARE TO REMAIN. PATCH AND REPAIR ANY DAMAGE TO EXISTING DOOR FRAME AND PREPARE FOR INSTALLATION OF NEW DOOR. COORDINATE WITH DOOR SCHEDULE.
6. REMOVE EXISTING WALL TILE IN BATHTUB STALL
7. REMOVE EXISTING F.R.P. WALL PANELS IN ALL (E) TOWER BATHROOMS AT ALL LEVELS.
8. REMOVE & DISPOSE OF ALL EXISTING BATHROOM CEILINGS.
9. REMOVE & DISPOSE OF RUBBER COVE AT ALL BATHROOM WALLS AND BATHTUB SKIRTS

DEMOLITION KEY NOTES

1. REMOVE & DISPOSE OF EXISTING TOILETS, LAVATORIES, FAUCETS, COUNTERS AND CABINETS.
2. REMOVE AND RELOCATE EXISTING LIGHT SWITCH AS REQUIRED. REFER TO (E) DRAWINGS.
3. REMOVE EXHAUST GRILLE IN CEILING. CLEAN AND VACUUM EXHAUST DUCT. CLEAN & STORE EXHAUST GRILL FOR REINSTALLATION WITH NEW CEILING.
4. SANDBLAST PAINTED CONCRETE FLOOR & PREPARE FOR NEW FLOOR INSTALLATION.
5. REMOVE EXISTING EPOXY FLOORING & PREPARE FOR NEW FLOOR INSTALLATION.
6. REMOVE & DISPOSE OF EXISTING LIGHT FIXTURES.
7. REMOVE & DISPOSE OF EXISTING DOOR FRAMES @ WATER CLOSET FRAMED OPENINGS. SECURE & PREPARE WALL FOR NEW FRAMED OPENING. PATCH PLASTER SMOOTH FINISH AT OPENING PERIMETER.
8. REMOVE & DISPOSE OF EXISTING TOWEL BARS, TOILET PAPER DISPENSER AND MIRRORS. PATCH HOLES IN WALL.
9. REMOVE & DISPOSE OF EXISTING SHOWER ROD AND CURTAIN.
10. REMOVE & DISPOSE OF EXISTING SHOWER VALVES, DRAINS & SHOWERHEADS. NOTE: WORK TO BE PERFORMED BY BATHFITTERS
11. REMOVE & DISPOSED OF EXISTING FIBERGLASS SHOWER BASIN. NOTE: WORK TO BE PERFORMED BY BATHFITTERS
2A. REMOVE EXISTING FLOOR DRAIN AND PREPARE FOR NEW FLOOR DRAIN.
2B. (ALTERNATE #1) CORE DRILL EXISTING CONCRETE SLAB TO PREPARE FOR NEW FLOOR DRAIN. COORDINATE SIZE AND LOCATION WITH P-DRAWINGS AND FINISHES.
13. REMOVE AND SALVAGE HEATER CABINET ENDS AND COVERS FOR REINSTALLATION. NOTE: APPLIES TO ALL OF FOURTH FLOOR BATHROOMS.
14. (BASE BID) REMOVE EXISTING DOOR, HINGES AND TRANSOM PANEL FROM FRAME. PREPARE FOR INSTALLATION OF NEW TRANSOM PANEL, DOOR AND DOOR HARDWARE AS PER SCHEDULE.
15. REMOVE & DISPOSE OF EXISTING TOILET PARTITIONS. PATCH HOLES IN WALL.

DEMOLITION LEGEND

ITEM TO BE DEMOLISHED

EXISTING DOOR AND TRANSOM TO BE REMOVED (AS PER SCHEDULE)

EXISTING DOOR AND TRANSOM TO REMAIN (AS PER SCHEDULE)

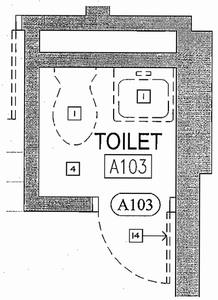

H10 BATHROOM DEMOLITION PLAN - (A103, B103, C102)
SCALE: 1/2" = 1'-0"

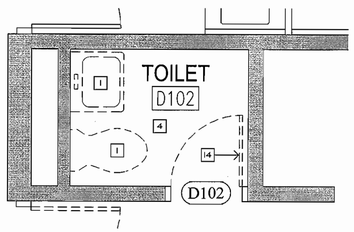

H6 BATHROOM DEMOLITION PLAN - (D102)
SCALE: 1/2" = 1'-0"

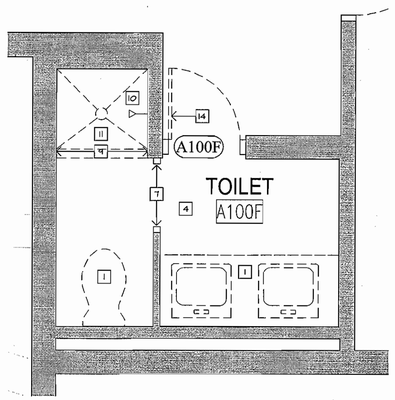

H3 BATHROOM DEMOLITION PLAN - (A100F, D100F)
SCALE: 1/2" = 1'-0"

TectonArchitects | inc
1 Hartford Sq. West, Hartford CT 06106
860 548 0802
17 Railroad Avenue, Westerly RI 02891
401 596 7555
tectonarchitects.com

Notice:
This drawing is the property of Tecton Architects | inc The use, re-use or reproduction of this drawing for any purpose whatsoever without an expressed written agreement between Tecton Architects | inc and the user is prohibited. Rights to use the information on this sheet are not transferred until payment has been received for services rendered. Any rights so granted are non-transferable to other parties without the prior expressed written consent of Tecton Architects | inc
© 2012 Tecton Architects | inc

Consultant
CREATIVE ENVIRONMENTS CORP. CONSULTING ENGINEERS

Owner
THE UNIVERSITY OF RHODE ISLAND
THINK BIG WE DO

Project
University of Rhode Island
BURNSIDE HALL
BATHROOM RENOVATIONS & DOOR & SIGNAGE REPLACEMENT
KINGSTON, RI

Key Plan
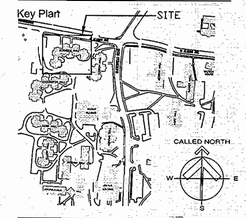

Seals

Issues

Date	Description
12/20/2012	FOR CONSTRUCTION

Revisions

No.	Date	Description
1	12/05/2012	REVIEW

Drawing Title
ENLARGED BATHROOM DEMOLITION FLOOR PLANS

Issue Date:	12/20/2012
Project No: KC.R.ROOM.2010.001	Scale: AS NOTED
Project Manager: MT	Production Leader: MS
Project Architect: MT	Peer Reviewer: JM

Drawing Number
A2.103

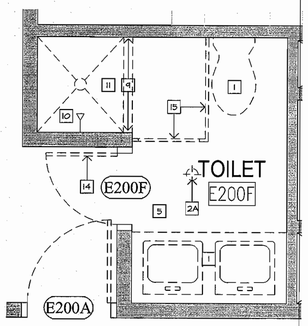

E10 BATHROOM DEMOLITION PLAN - (E200F, E201E)
SCALE: 1/2" = 1'-0"
TYPICAL @ 2ND, 3RD & 4TH FLOORS

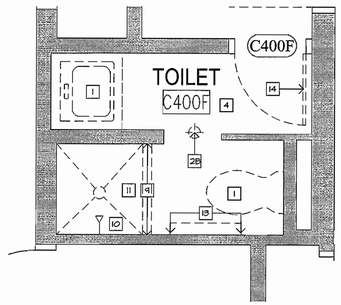

C6 BATHROOM DEMOLITION PLAN - (B400F, B401F, C400F, C401F)
SCALE: 1/2" = 1'-0"
SPECIFIC TO FOURTH FLOOR ONLY

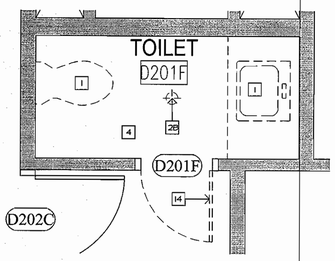

E10 BATHROOM DEMOLITION PLAN - (D201F)
SCALE: 1/2" = 1'-0"
TYPICAL @ 2ND, 3RD & 4TH FLOORS

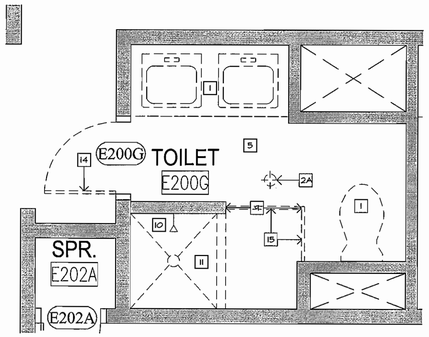

E6 BATHROOM DEMOLITION PLAN - (E200G, E201F)
SCALE: 1/2" = 1'-0"
TYPICAL @ 2ND, 3RD & 4TH FLOORS

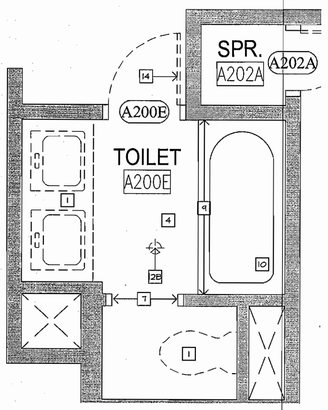

H10 BATHROOM DEMOLITION PLAN - (A200E, A201F, B200E, B201F, C200F, C201E, D200F, D201E)
SCALE: 1/2" = 1'-0"
TYPICAL @ 2ND, 3RD & 4TH FLOORS

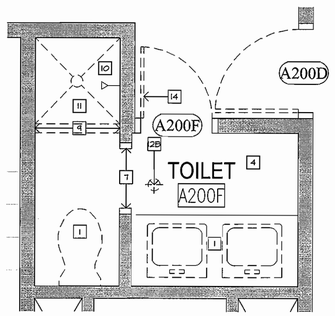

H6 BATHROOM DEMOLITION PLAN - (A200F, B201E, C201F, D200E)
SCALE: 1/2" = 1'-0"
TYPICAL @ 2ND, 3RD & 4TH FLOORS

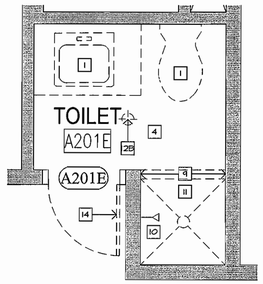

H3 BATHROOM DEMOLITION PLAN - (A201E, B200F, C200E)
SCALE: 1/2" = 1'-0"
TYPICAL @ 2ND, 3RD & 4TH FLOORS

GENERAL DEMOLITION NOTES

1. COORDINATE ALL DEMOLITION WITH NEW CONSTRUCTION REQUIREMENTS
2. THE CONTRACTOR SHALL BE RESPONSIBLE FOR THE REMOVAL & LAWFUL DISPOSING OF ALL MATERIALS AS DESCRIBED.
3. PROVIDE TEMPORARY SURFACE PROTECTION DURING REMOVAL OF ITEMS. CONTRACTOR IS RESPONSIBLE FOR ANY SURFACE/FLOOR/FINISH DAMAGE THAT MAY OCCUR.
4. MECHANICAL, ELECTRICAL AND OR OTHER WORK RELATED TO A WALL OR AREA SCHEDULED FOR DEMOLITION AND REMOVAL SHALL BE PERFORMED WETHER SO NOTED OR NOT. PROTECT ALL ITEMS INTENDED FOR SALVAGE AND REUSE OR SCHEDULED TO REMAIN.
5. WHERE DOORS AND TRANSOMS ARE SHOWN TO BE DEMOLISHED FRAMES ARE TO REMAIN. PATCH AND REPAIR ANY DAMAGE TO EXISTING DOOR FRAME AND PREPARE FOR INSTALLATION OF NEW DOOR. COORDINATE WITH DOOR SCHEDULE.
6. REMOVE EXISTING WALL TILE IN BATHTUB STALL
7. REMOVE EXISTING F.R.P. WALL PANELS IN ALL (E) TOWER BATHROOMS AT ALL LEVELS.
8. REMOVE & DISPOSE OF ALL EXISTING BATHROOM CEILINGS.
9. REMOVE & DISPOSE OF RUBBER COVE AT ALL BATHROOM WALLS AND BATHTUB SKIRTS

DEMOLITION KEY NOTES

1. REMOVE & DISPOSE OF EXISTING TOILETS, LAVATORIES, FAUCETS, COUNTERS AND CABINETS.
2. REMOVE AND RELOCATE EXISTING LIGHT SWITCH AS REQUIRED. REFER TO (E) DRAWINGS.
3. REMOVE EXHAUST GRILLE IN CEILING. CLEAN AND VACUUM EXHAUST DUCT. CLEAN & STORE EXHAUST GRILL FOR REINSTALLATION WITH NEW CEILING.
4. SANDBLAST PAINTED CONCRETE FLOOR & PREPARE FOR NEW FLOOR INSTALLATION.
5. REMOVE EXISTING EPOXY FLOORING & PREPARE FOR NEW FLOOR INSTALLATION.
6. REMOVE & DISPOSE OF EXISTING LIGHT FIXTURES.
7. REMOVE & DISPOSE OF EXISTING DOOR FRAMES & WATER CLOSET FRAMED OPENINGS. SECURE & PREPARE WALL FOR NEW FRAMED OPENING. PATCH PLASTER SMOOTH FINISH AT OPENING PERIMETER.
8. REMOVE & DISPOSE OF EXISTING TOWEL BARS, TOILET PAPER DISPENSER AND MIRRORS. PATCH HOLES IN WALL.
9. REMOVE & DISPOSE OF EXISTING SHOWER ROD AND CURTAIN.
10. REMOVE & DISPOSE OF EXISTING SHOWER VALVES, DRAINS & SHOWERHEADS. NOTE: WORK TO BE PERFORMED BY BATHFITTERS
11. REMOVE & DISPOSED OF EXISTING FIBERGLASS SHOWER BASIN. NOTE: WORK TO BE PERFORMED BY BATHFITTERS
2A. REMOVE EXISTING FLOOR DRAIN AND PREPARE FOR NEW FLOOR DRAIN.
2B. (ALTERNATE #1) CORE DRILL EXISTING CONCRETE SLAB TO PREPARE FOR NEW FLOOR DRAIN. COORDINATE SIZE AND LOCATION WITH P-DRAWINGS AND FINISHES.
13. REMOVE AND SALVAGE HEATER CABINET ENDS AND COVERS FOR REINSTALLATION. NOTE: APPLIES TO ALL OF FOURTH FLOOR BATHROOMS.
14. (BASE BID) REMOVE EXISTING DOOR, HINGES AND TRANSOM PANEL FROM FRAME. PREPARE FOR INSTALLATION OF NEW TRANSOM PANEL, DOOR AND DOOR HARDWARE AS PER SCHEDULE.
15. REMOVE & DISPOSE OF EXISTING TOILET PARTITIONS. PATCH HOLES IN WALL.

DEMOLITION LEGEND

ITEM TO BE DEMOLISHED

EXISTING DOOR AND TRANSOM TO BE REMOVED (AS PER SCHEDULE)

EXISTING DOOR AND TRANSOM TO REMAIN (AS PER SCHEDULE)

TectonArchitects | inc
1 Hartford Sq. West, Hartford CT 06106
860 548 0802
17 Railroad Avenue, Westerly RI 02891
401 596 7555
tectonarchitects.com

Notice:
This drawing is the property of Tecton Architects | inc The use, re-use or reproduction of this drawing for any purpose whatsoever without an expressed written agreement between Tecton Architects | inc and the user is prohibited. Rights to use the information on this sheet are not transferred until payment has been received for services rendered. Any rights so granted are non-transferable to other parties without the prior expressed written consent of Tecton Architects | inc

© 2012 Tecton Architects | inc

Consultant
CREATIVE ENVIRONMENTS CORP. CONSULTING ENGINEERS

Owner
THE UNIVERSITY OF RHODE ISLAND
THINK BIG WE DO

Project
University of Rhode Island
BURNSIDE HALL
BATHROOM RENOVATIONS & DOOR & SIGNAGE REPLACEMENT
KINGSTON, RI

Key Plan
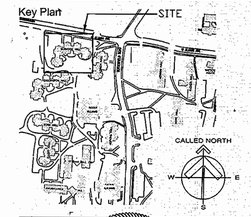

Seals

Issues

Date	Description
12/20/2012	FOR CONSTRUCTION

Revisions

No.	Date	Description
1	12/05/2012	REVIEW

Drawing Title
ENLARGED BATHROOM DEMOLITION FLOOR PLANS

Issue Date:	12/20/2012
Project No: KC.R.ROGW.2010.001	Scale: AS NOTED
Project Manager: MT	Production Leader: MS
Project Architect: MT	Peer Reviewer: JM

Drawing Number
A2.104

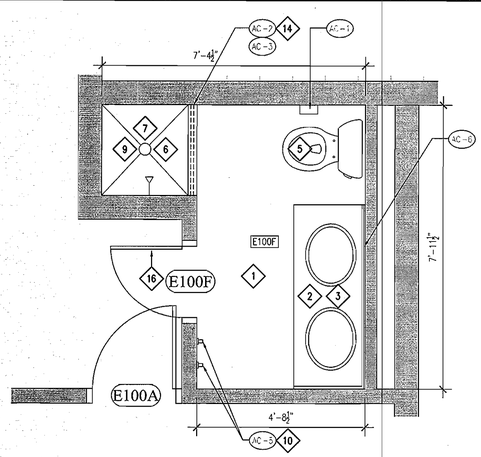

E10 BATHROOM FLOOR PLAN - (E100F)
SCALE: 1/2" = 1'-0"

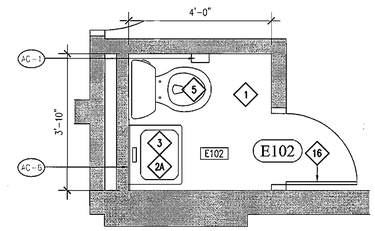

C6 BATHROOM FLOOR PLAN - (E102)
SCALE: 1/2" = 1'-0"

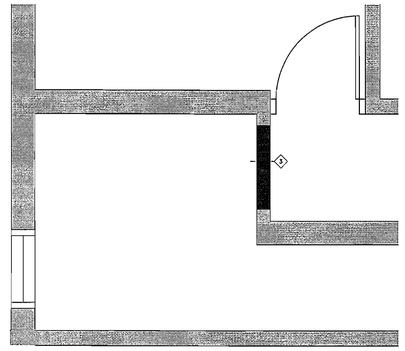

C4 JANITORS CLOSET - (A106)
SCALE: 1/2" = 1'-0"

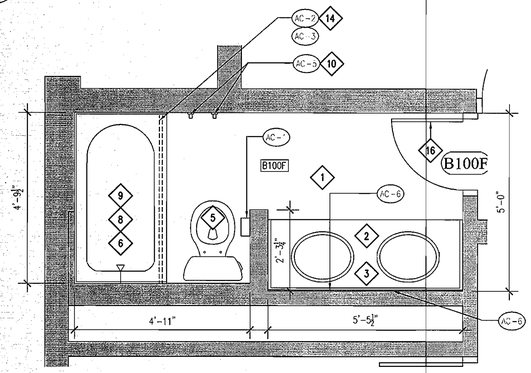

E10 BATHROOM FLOOR PLAN - (B100F)
SCALE: 1/2" = 1'-0"

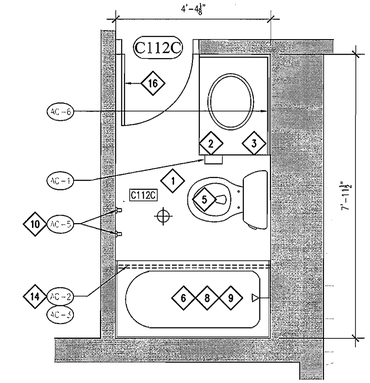

E6 BATHROOM FLOOR PLAN - (C112C)
SCALE: 1/2" = 1'-0"

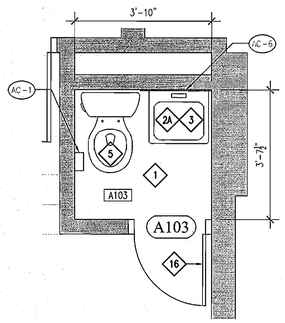

H10 BATHROOM FLOOR PLAN - (A103, B103, C102)
SCALE: 1/2" = 1'-0"

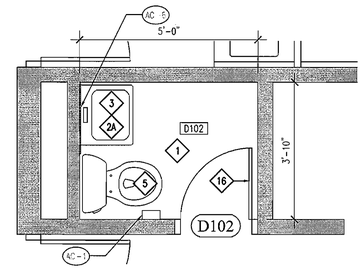

H6 BATHROOM FLOOR PLAN - (D102)
SCALE: 1/2" = 1'-0"

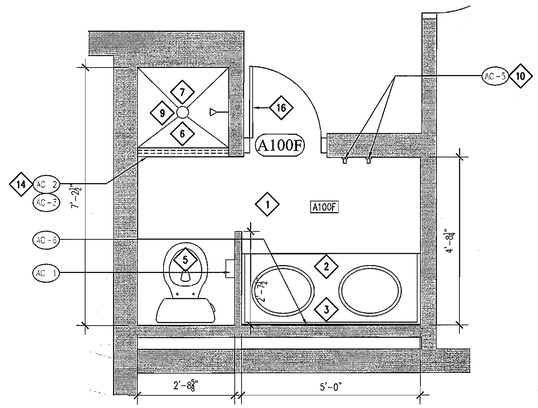

H3 BATHROOM FLOOR PLAN - (A100F, D100F)
SCALE: 1/2" = 1'-0"

CONSTRUCTION NOTES

1. PREPARE SUBFLOOR AND INSTALL NEW 2X2 CERAMIC TILE FLOORING & COVE.
2. INSTALL NEW SOLID SURFACE COUNTER, BACK SPLASH, SIDE SPLASH AND INTEGRAL SINKS. CONNECT TO EXISTING SUPPLY AND DRAIN.
2A. INSTALL NEW WALL MOUNTED SINK CONNECT TO EXISTING SUPPLY AND DRAIN.
3. INSTALL NEW FAUCETS AND VALVES.
4. INSTALL FIBER REINFORCED PANELS FLOOR TO UNDERSIDE OF DECK ON ALL BATHROOM WALLS (EXCEPT @ SHOWER & BATHTUB STALLS - SEE ALSO DETAIL B10/A2.201).
5. INSTALL NEW TOILET AND RECONNECT TO SUPPLY AND DRAIN
6. INSTALL NEW BATHFITTERS DRAIN, VALVE AND SHOWERHEAD. (WORK TO BE PERFORMED BY BATHFITTERS).
7. INSTALL NEW BATHFITTERS SHOWER ENCLOSURES INCLUDING SHOWER PAN, WALL INSERTS & CEILING. (WORK TO BE PERFORMED BY BATHFITTERS)
8. INSTALL NEW BATHFITTERS BATHTUB LINER & WALL INSERTS. (WORK TO BE PERFORMED BY BATHFITTERS)
9. INSTALL NEW DRAIN. (WORK TO BE PERFORMED BY BATHFITTERS)
10. INSTALL NEW STAINLESS STEEL ROBE HOOKS @ 6'-0" AFF. REFER TO INTERIOR ELEVATIONS - A5.201/A5.202 FOR LOCATIONS
11. PROVIDE AND INSTALL ONE WALL MOUNTED UP/DOWN FLUORESCENT LIGHT FIXTURE ABOVE SINK AND ONE CEILING MOUNTED LIGHT FIXTURE IN FRONT OF SHOWER (SEE REFLECTED CEILING PLAN). INSTALLATION INCLUDES WIREMOLD, WIRE AND SWITCH
12. FURNISH AND INSTALL ONE 16" DEEP HEAVY DUTY, PLASTIC COATED METAL WIRE SHELF SET 8" A.F.F.
13. REINSTALL EXHAUST GRILLE IN CEILING.
14. INSTALL NEW SHOWER ROD AND CURTAIN AT EXISTING HEIGHT.
15. INSTALL ACCESS PANELS. REPLACE DAMAGED UNITS. (CONTINGENCY ALLOWANCE)
16. INSTALL NEW DOOR AND TRANSOM AS PER SCHEDULE. PATCH AND REPAIR EXISTING DOOR FRAME AND PAINT.
17. INSTALL NEW FLOOR DRAIN. - COORDINATE WITH P-DRAWINGS AND FINISHES

TOILET ACCESSORIES

AC-1	TOILET PAPER HOLDER. TO BE PROVIDED BY OWNER AND INSTALLED BY CONTRACTOR.
AC-2	STAINLESS STEEL, SATIN FINISH SHOWER ROD & MOUNTING BRACKETS.
AC-3	SHOWER CURTAIN AND SHOWER CURTAIN RINGS
AC-4	NEW HEAVY DUTY METAL WIRE SHELF - MOUNTED 8" A.F.F.
AC-5	NEW STAINLESS STEEL ROBE HOOKS MTD. 6'-0" A.F.F.
AC-6	NEW FRAMELESS MIRROR - REFER TO INTERIOR ELEVATIONS - A5.201/5.202 FOR SIZING.
AC-7	8" DEEP SOLID SURFACE PLASTIC SHELF.

NOTE:

1. BATHFITTERS INSTALLATION TO BE DONE LAST.

TectonArchitects | inc
1 Hartford Sq. West, Hartford CT 06106
860 548 0802
17 Railroad Avenue, Westerly RI 02891
401 596 7555
tectonarchitects.com

Notice:
This drawing is the property of Tecton Architects | inc The use, re-use or reproduction of this drawing for any purpose whatsoever without an expressed written agreement between Tecton Architects | inc and the user is prohibited. Rights to use the information on this sheet are not transferred until payment has been received for services rendered. Any rights so granted are non-transferable to other parties without the prior expressed written consent of Tecton Architects | inc

© 2012 Tecton Architects | inc

Consultant

Owner
THE UNIVERSITY OF RHODE ISLAND
THINK BIG WE DO

Project
University of Rhode Island
BURNSIDE HALL
BATHROOM RENOVATIONS & DOOR & SIGNAGE REPLACEMENT
KINGSTON, RI

Key Plan

Seals

Issues

Date	Description
12/20/2012	FOR CONSTRUCTION

Revisions

No.	Date	Description
1	12/05/2012	REVIEW

Drawing Title

BATHROOM CONSTRUCTION FLOOR PLANS

Issue Date: 12/20/2012

Project No:	KC.R.ROCW.2010.001	Scale:	AS NOTED
Project Manager:	MT	Production Leader:	MS
Project Architect:	MT	Peer Reviewer:	JM

Drawing Number

A2.201

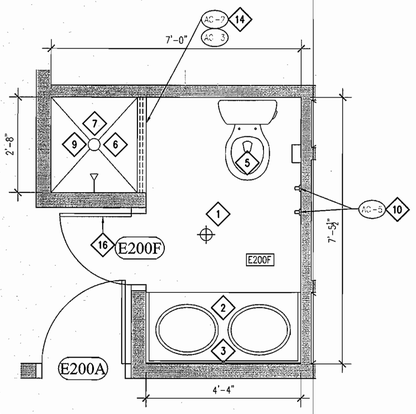

E19 BATHROOM FLOOR PLAN - (E200F, E201E)
SCALE: 1/2" = 1'-0"
TYPICAL @ 2ND, 3RD & 4TH FLOORS

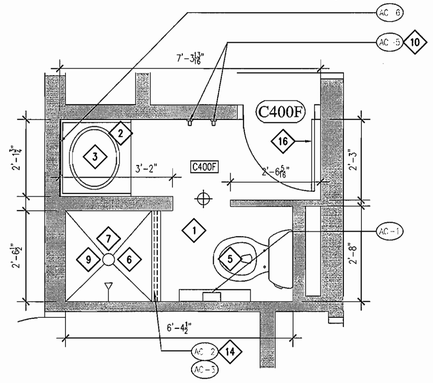

C6 BATHROOM FLOOR PLAN - (C400F, C401F)
SCALE: 1/2" = 1'-0"
SPECIFIC TO FOURTH FLOOR C TOWER ONLY

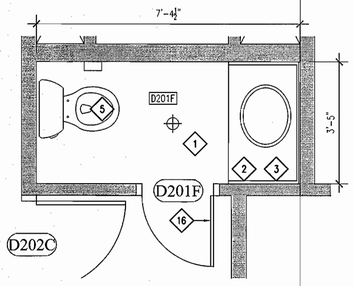

E10 BATHROOM FLOOR PLAN - (D201F)
SCALE: 1/2" = 1'-0"
TYPICAL @ 2ND, 3RD & 4TH FLOORS

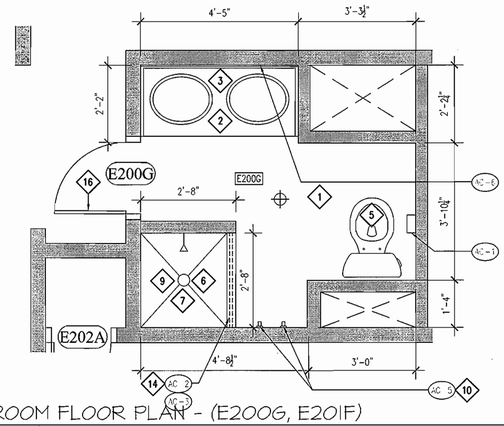

E6 BATHROOM FLOOR PLAN - (E200G, E201F)
SCALE: 1/2" = 1'-0"
TYPICAL @ 2ND, 3RD & 4TH FLOORS

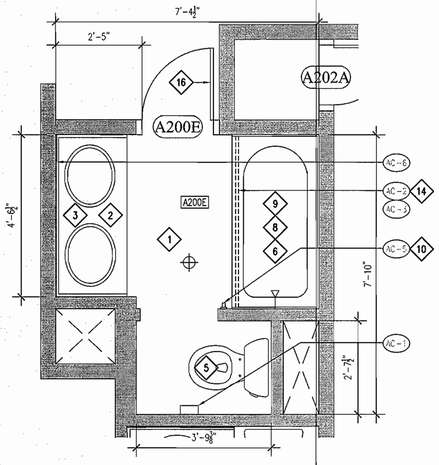

H10 BATHROOM FLOOR PLAN - (A200E, A201F, B200E, B201F, C200F, C201E, D200F, D201E)
SCALE: 1/2" = 1'-0"
TYPICAL @ 2ND, 3RD & 4TH FLOORS

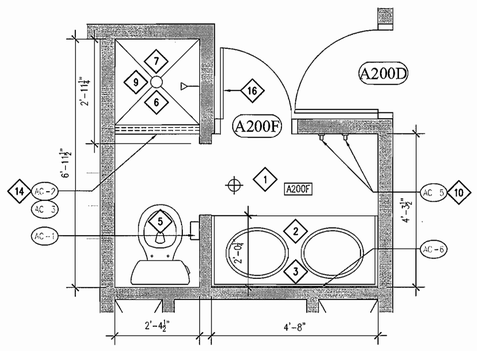

H6 BATHROOM FLOOR PLAN - (A200F, B201E, C201F, D200E)
SCALE: 1/2" = 1'-0"
TYPICAL @ 2ND, 3RD & 4TH FLOORS

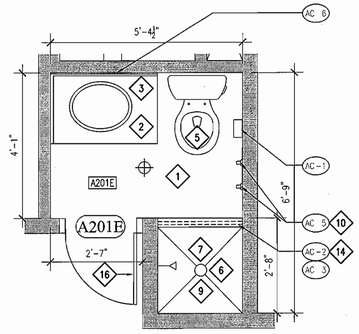

H3 BATHROOM FLOOR PLAN - (A201E, B200F, C200E)
SCALE: 1/2" = 1'-0"
TYPICAL @ 2ND, 3RD & 4TH FLOORS

CONSTRUCTION NOTES

1. PREPARE SUBFLOOR AND INSTALL NEW 2X2 CERAMIC TILE FLOORING & COVE.
2. INSTALL NEW SOLID SURFACE COUNTER, BACK SPLASH, SIDE SPLASH AND INTEGRAL SINKS. CONNECT TO EXISTING SUPPLY AND DRAIN.
2A. INSTALL NEW WALL MOUNTED SINK CONNECT TO EXISTING SUPPLY AND DRAIN.
3. INSTALL NEW FAUCETS AND VALVES.
4. INSTALL FIBER REINFORCED PANELS FLOOR TO UNDERSIDE OF DECK ON ALL BATHROOM WALLS (EXCEPT @ SHOWER & BATHTUB STALLS - SEE ALSO DETAIL B10/A2.201).
5. INSTALL NEW TOILET AND RECONNECT TO SUPPLY AND DRAIN
6. INSTALL NEW BATHFITTERS DRAIN, VALVE AND SHOWERHEAD. (WORK TO BE PERFORMED BY BATHFITTERS).
7. INSTALL NEW BATHFITTERS SHOWER ENCLOSURES INCLUDING SHOWER PAN, WALL INSERTS & CEILING. (WORK TO BE PERFORMED BY BATHFITTERS)
8. INSTALL NEW BATHFITTERS BATHTUB LINER & WALL INSERTS. (WORK TO BE PERFORMED BY BATHFITTERS)
9. INSTALL NEW DRAIN. (WORK TO BE PERFORMED BY BATHFITTERS)
10. INSTALL NEW STAINLESS STEEL ROBE HOOKS @ 6'-0" AFF. REFER TO INTERIOR ELEVATIONS - A5.201/A5.202 FOR LOCATIONS
11. PROVIDE AND INSTALL ONE WALL MOUNTED UP/DOWN FLUORESCENT LIGHT FIXTURE ABOVE SINK AND ONE CEILING MOUNTED LIGHT FIXTURE IN FRONT OF SHOWER (SEE REFLECTED CEILING PLAN). INSTALLATION INCLUDES WIREMOLD, WIRE AND SWITCH
12. FURNISH AND INSTALL ONE 16" DEEP HEAVY DUTY, PLASTIC COATED METAL WIRE SHELF SET 8" A.F.F.
13. REINSTALL EXHAUST GRILLE IN CEILING.
14. INSTALL NEW SHOWER ROD AND CURTAIN AT EXISTING HEIGHT.
15. INSTALL ACCESS PANELS. REPLACE DAMAGED UNITS. (CONTINGENCY ALLOWANCE)
16. INSTALL NEW DOOR AND TRANSOM AS PER SCHEDULE. PATCH AND REPAIR EXISTING DOOR FRAME AND PAINT.
17. INSTALL NEW FLOOR DRAIN. - COORDINATE WITH P-DRAWINGS AND FINISHES

TOILET ACCESSORIES

AC-1	TOILET PAPER HOLDER. TO BE PROVIDED BY OWNER AND INSTALLED BY CONTRACTOR.
AC-2	STAINLESS STEEL, SATIN FINISH SHOWER ROD & MOUNTING BRACKETS.
AC-3	SHOWER CURTAIN AND SHOWER CURTAIN RINGS
AC-4	NEW HEAVY DUTY METAL WIRE SHELF - MOUNTED 8" A.F.F.
AC-5	NEW STAINLESS STEEL ROBE HOOKS MTD. 6'-0" A.F.F.
AC-6	NEW FRAMELESS MIRROR - REFER TO INTERIOR ELEVATIONS - A5.201/5.202 FOR SIZING.
AC-7	8" DEEP SOLID SURFACE PLASTIC SHELF.

NOTE:

1. BATHFITTERS INSTALLATION TO BE DONE LAST.

TectonArchitects | inc
1 Hartford Sq. West, Hartford CT 06106
860 548.0802
17 Railroad Avenue, Westerly RI 02891
401 596 7555
tectonarchitects.com

Notice:
This drawing is the property of Tecton Architects | Inc The use, re-use or reproduction of this drawing for any purpose whatsoever without an expressed written agreement between Tecton Architects | Inc and the user is prohibited. Rights to use the information on this sheet are not transferred until payment has been received for services rendered. Any rights so granted are non-transferable to other parties without the prior expressed written consent of Tecton Architects | Inc

© 2012 Tecton Architects | Inc

Consultant
CREATIVE ENVIRONMENTS CORP. CONSULTING ENGINEERS

Owner
THE UNIVERSITY OF RHODE ISLAND
THINK BIG WE DO

Project
University of Rhode Island
BURNSIDE HALL
BATHROOM RENOVATIONS & DOOR & SIGNAGE REPLACEMENT
KINGSTON, RI

Key Plan
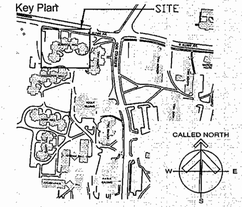

Seals
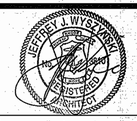

Issues

Date	Description
12/20/2012	FOR CONSTRUCTION

Revisions

No.	Date	Description
1	12/05/2012	REVIEW

Drawing Title
BATHROOM CONSTRUCTION FLOOR PLANS

Issue Date:	12/20/2012
Project No: KC.R.ROGW.2010.001	Scale: AS NOTED
Project Manager: MT	Production Leader: MS
Project Architect: MT	Peer Reviewer: JM

Drawing Number
A2.202

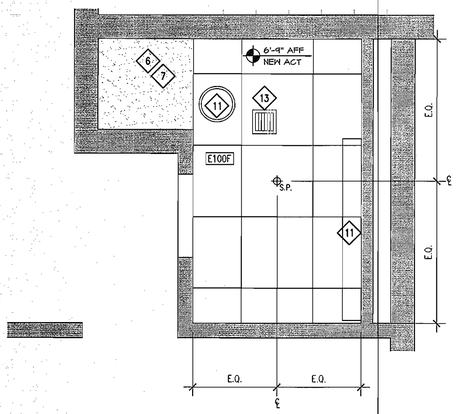

E10 BATHROOM REFLECTED CEILING PLAN - (E100F)
SCALE: 1/2" = 1'-0"

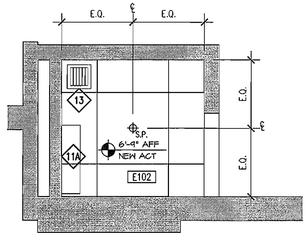

C6 BATHROOM REFLECTED CEILING PLAN - (E102)
SCALE: 1/2" = 1'-0"

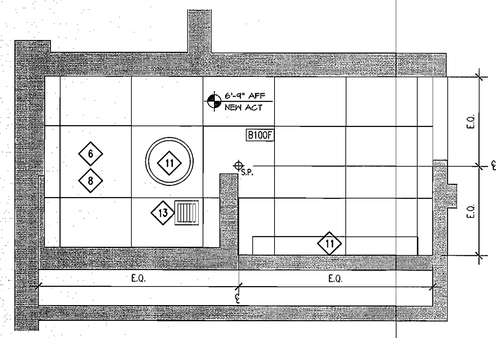

E10 BATHROOM REFLECTED CEILING PLAN - (B100F)
SCALE: 1/2" = 1'-0"

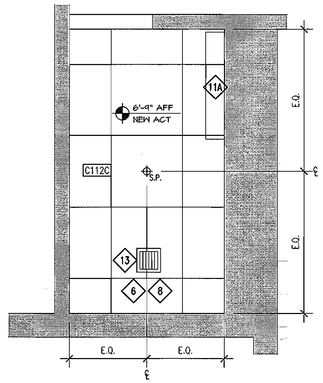

E6 BATHROOM REFLECTED CEILING PLAN - (C112C)
SCALE: 1/2" = 1'-0"

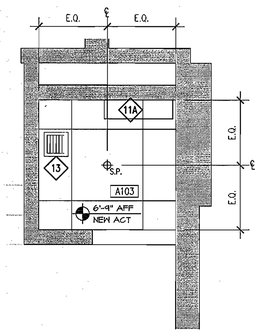

H10 BATHROOM REFLECTED CEILING PLAN - (A103, B103, C102)
SCALE: 1/2" = 1'-0"

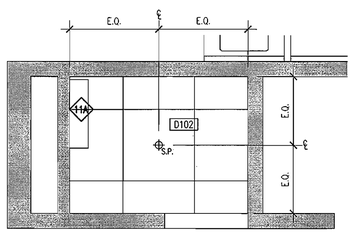

H6 BATHROOM REFLECTED CEILING PLAN - (D102)
SCALE: 1/2" = 1'-0"

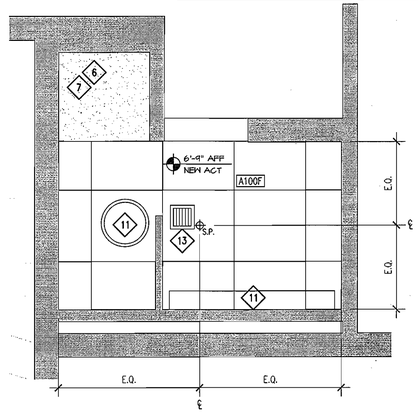

H3 BATHROOM REFLECTED CEILING PLAN - (A100F, D100F)
SCALE: 1/2" = 1'-0"

CONSTRUCTION NOTES

1. PREPARE SUBFLOOR AND INSTALL NEW 2X2 CERAMIC TILE FLOORING & COVE.
2. INSTALL NEW SOLID SURFACE COUNTER, BACK SPLASH, SIDE SPLASH AND INTEGRAL SINKS. CONNECT TO EXISTING SUPPLY AND DRAIN.
2A. INSTALL NEW WALL MOUNTED SINK CONNECT TO EXISTING SUPPLY AND DRAIN.
3. INSTALL NEW FAUCETS AND VALVES.
4. INSTALL FIBER REINFORCED PANELS FLOOR TO UNDERSIDE OF DECK ON ALL BATHROOM WALLS (EXCEPT @ SHOWER & BATHTUB STALLS - SEE ALSO DETAIL B10/A2.201).
5. INSTALL NEW TOILET AND RECONNECT TO SUPPLY AND DRAIN
6. INSTALL NEW BATHFITTERS DRAIN, VALVE AND SHOWERHEAD. (WORK TO BE PERFORMED BY BATHFITTERS).
7. INSTALL NEW BATHFITTERS SHOWER ENCLOSURES INCLUDING SHOWER PAN, WALL INSERTS & CEILING. (WORK TO BE PERFORMED BY BATHFITTERS)
8. INSTALL NEW BATHFITTERS BATHTUB LINER & WALL INSERTS. (WORK TO BE PERFORMED BY BATHFITTERS)
9. INSTALL NEW DRAIN. (WORK TO BE PERFORMED BY BATHFITTERS)
10. INSTALL NEW STAINLESS STEEL ROBE HOOKS @ 6'-0" AFF. REFER TO INTERIOR ELEVATIONS - A5.201/A5.202 FOR LOCATIONS
11. PROVIDE AND INSTALL ONE WALL MOUNTED UP/DOWN FLUORESCENT LIGHT FIXTURE ABOVE SINK AND ONE CEILING MOUNTED LIGHT FIXTURE IN FRONT OF SHOWER (SEE REFLECTED CEILING PLAN). INSTALLATION INCLUDES WIREMOLD, WIRE AND SWITCH
11A. PROVIDE AND INSTALL ONE WALL MOUNTED UP/DOWN LIGHT FIXTURE ABOVE SINK. (SEE REFLECTED CEILING PLAN). INSTALLATION INCLUDES WIREMOLD, WIRE AND SWITCH.
12. FURNISH AND INSTALL ONE 16" DEEP HEAVY DUTY, PLASTIC COATED METAL WIRE SHELF SET 8" A.F.F.
13. REINSTALL EXHAUST GRILLE IN CEILING.
14. INSTALL NEW SHOWER ROD AND CURTAIN AT EXISTING HEIGHT.
15. INSTALL ACCESS PANELS. REPLACE DAMAGED UNITS. (CONTINGENCY ALLOWANCE)
16. INSTALL NEW DOOR AND TRANSOM AS PER SCHEDULE. PATCH AND REPAIR EXISTING DOOR FRAME AND PAINT.

TOILET ACCESSORIES

AC-1	TOILET PAPER HOLDER. TO BE PROVIDED BY OWNER AND INSTALLED BY CONTRACTOR.
AC-2	STAINLESS STEEL, SATIN FINISH SHOWER ROD & MOUNTING BRACKETS.
AC-3	SHOWER CURTAIN AND SHOWER CURTAIN RINGS
AC-4	NEW HEAVY DUTY METAL WIRE SHELF - MOUNTED 8" A.F.F.
AC-5	NEW STAINLESS STEEL ROBE HOOKS MTD. 6'-0" A.F.F.
AC-6	NEW FRAMELESS MIRROR - REFER TO INTERIOR ELEVATIONS - A5.201/5.202 FOR SIZING.
AC-7	8" DEEP SOLID SURFACE PLASTIC SHELF.

REFLECTED CEILING PLAN LEGEND

- S.P — 2'x2' A.C.T TILE CEILING.
- CEILING GRID START POINT.
- BATHFITTERS SHOWER ENCLOSURE CEILING INSERT
- WALL MOUNTED FLORESCENT LIGHT FIXTURE.
- CEILING MOUNTED LIGHT FIXTURE.
- EXHAUST DUCT GRILL.

NOTE:

1. BATHFITTERS INSTALLATION TO BE DONE LAST.

TectonArchitects | inc
1 Hartford Sq. West, Hartford CT 06106
860 548 0802
17 Railroad Avenue, Westerly RI 02891
401 596 7555
tectonarchitects.com

Notice:
This drawing is the property of Tecton Architects | inc The use, re-use or reproduction of this drawing for any purpose whatsoever without an expressed written agreement between Tecton Architects | inc and the user is prohibited. Rights to use the information on this sheet are not transferred until payment has been received for services rendered. Any rights so granted are non-transferable to other parties without the prior expressed written consent of Tecton Architects | inc
© 2012 Tecton Architects | inc

Consultant

Owner
THE UNIVERSITY OF RHODE ISLAND
THINK BIG WE DO

Project
University of Rhode Island
BURNSIDE HALL
BATHROOM RENOVATIONS & DOOR & SIGNAGE REPLACEMENT
KINGSTON, RI

Key Plan

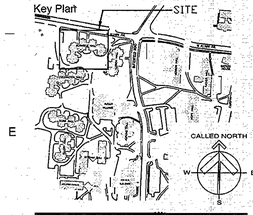

Seals

Issues

Date	Description
12/20/2012	FOR CONSTRUCTION

Revisions

No.	Date	Description
1	12/05/2012	REVIEW

Drawing Title

BATHROOM REFLECTED CEILING PLANS

Issue Date:	12/20/2012
Project No: KC.R.ROGW.2010.001	Scale: AS NOTED
Project Manager: MT	Production Leader: MS
Project Architect: MT	Peer Reviewer: JM

Drawing Number

A2.301

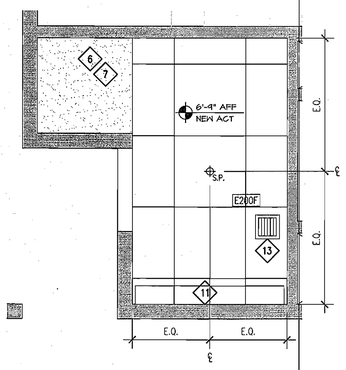

E10 BATHROOM REFLECTED CEILING PLAN - (E200F, E201E)
SCALE: 1/2" = 1'-0" TYPICAL @ 2ND, 3RD & 4TH FLOORS

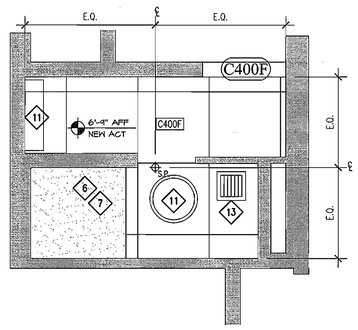

C6 BATHROOM REFLECTED CEILING PLAN - (B400E, B401E, C400F, C401F)
SCALE: 1/2" = 1'-0" SPECIFIC TO FOURTH FLOOR ONLY

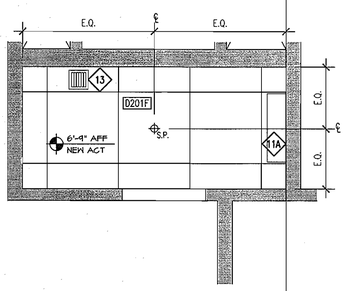

E10 BATHROOM REFLECTED CEILING PLAN - (D201F)
SCALE: 1/2" = 1'-0" TYPICAL @ 2ND, 3RD & 4TH FLOORS

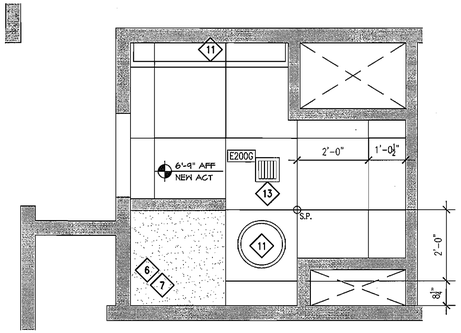

E6 BATHROOM REFLECTED CEILING PLAN - (E200G, E201F)
SCALE: 1/2" = 1'-0" TYPICAL @ 2ND, 3RD & 4TH FLOORS

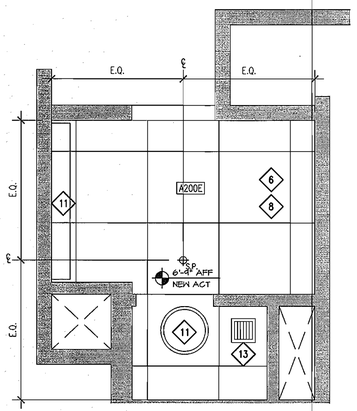

H10 BATHROOM REFLECTED CEILING PLAN - (A200E, A201F, B200E, B201F, C200F, C201E, D200F, D201E)
SCALE: 1/2" = 1'-0" TYPICAL @ 2ND, 3RD & 4TH FLOORS

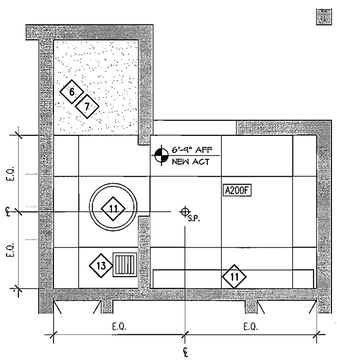

H6 BATHROOM REFLECTED CEILING PLAN - (A200F, B201E, C201F, D200E)
SCALE: 1/2" = 1'-0" TYPICAL @ 2ND, 3RD & 4TH FLOORS

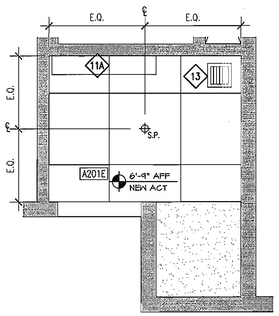

H3 BATHROOM REFLECTED CEILING PLAN - (A201E, B200F, C200E)
SCALE: 1/2" = 1'-0" TYPICAL @ 2ND, 3RD & 4TH FLOORS

CONSTRUCTION NOTES

1. PREPARE SUBFLOOR AND INSTALL NEW 2X2 CERAMIC TILE FLOORING & COVE.
2. INSTALL NEW SOLID SURFACE COUNTER, BACK SPLASH, SIDE SPLASH AND INTEGRAL SINKS. CONNECT TO EXISTING SUPPLY AND DRAIN.
2A. INSTALL NEW WALL MOUNTED SINK CONNECT TO EXISTING SUPPLY AND DRAIN.
3. INSTALL NEW FAUCETS AND VALVES.
4. INSTALL FIBER REINFORCED PANELS FLOOR TO UNDERSIDE OF DECK ON ALL BATHROOM WALLS (EXCEPT @ SHOWER & BATHTUB STALLS - SEE ALSO DETAIL B10/A2.201).
5. INSTALL NEW TOILET AND RECONNECT TO SUPPLY AND DRAIN
6. INSTALL NEW BATHFITTERS DRAIN, VALVE AND SHOWERHEAD. (WORK TO BE PERFORMED BY BATHFITTERS).
7. INSTALL NEW BATHFITTERS SHOWER ENCLOSURES INCLUDING SHOWER PAN, WALL INSERTS & CEILING. (WORK TO BE PERFORMED BY BATHFITTERS)
8. INSTALL NEW BATHFITTERS BATHTUB LINER & WALL INSERTS. (WORK TO BE PERFORMED BY BATHFITTERS)
9. INSTALL NEW DRAIN. (WORK TO BE PERFORMED BY BATHFITTERS)
10. INSTALL NEW STAINLESS STEEL ROBE HOOKS @ 6'-0" AFF. REFER TO INTERIOR ELEVATIONS - A5.201/A5.202 FOR LOCATIONS
11. PROVIDE AND INSTALL ONE WALL MOUNTED UP/DOWN FLUORESCENT LIGHT FIXTURE ABOVE SINK AND ONE CEILING MOUNTED LIGHT FIXTURE IN FRONT OF SHOWER (SEE REFLECTED CEILING PLAN). INSTALLATION INCLUDES WIREMOLD, WIRE AND SWITCH
11A. PROVIDE AND INSTALL ONE WALL MOUNTED UP/DOWN LIGHT FIXTURE ABOVE SINK. (SEE REFLECTED CEILING PLAN). INSTALLATION INCLUDES WIREMOLD, WIRE AND SWITCH.
12. FURNISH AND INSTALL ONE 16" DEEP HEAVY DUTY, PLASTIC COATED METAL WIRE SHELF SET 8" A.F.F.
13. REINSTALL EXHAUST GRILLE IN CEILING.
14. INSTALL NEW SHOWER ROD AND CURTAIN AT EXISTING HEIGHT.
15. INSTALL ACCESS PANELS. REPLACE DAMAGED UNITS. (CONTINGENCY ALLOWANCE)
16. INSTALL NEW DOOR AND TRANSOM AS PER SCHEDULE. PATCH AND REPAIR EXISTING DOOR FRAME AND PAINT.

TOILET ACCESSORIES

AC-1	TOILET PAPER HOLDER. TO BE PROVIDED BY OWNER AND INSTALLED BY CONTRACTOR.
AC-2	STAINLESS STEEL, SATIN FINISH SHOWER ROD & MOUNTING BRACKETS.
AC-3	SHOWER CURTAIN AND SHOWER CURTAIN RINGS
AC-4	NEW HEAVY DUTY METAL WIRE SHELF - MOUNTED 6" A.F.F.
AC-5	NEW STAINLESS STEEL ROBE HOOKS MTD. 6'-0" A.F.F.
AC-6	NEW FRAMELESS MIRROR - REFER TO INTERIOR ELEVATIONS - A5.201/5.202 FOR SIZING.
AC-7	8" DEEP SOLID SURFACE PLASTIC SHELF.

REFLECTED CEILING PLAN LEGEND

- 2'x2' A.C.T TILE CEILING.
- S.P. — CEILING GRID START POINT.
- WALL MOUNTED FLORESCENT LIGHT FIXTURE.
- CEILING MOUNTED LIGHT FIXTURE.
- EXHAUST DUCT GRILL.

NOTE:

1. BATHFITTERS INSTALLATION TO BE DONE LAST.

TectonArchitects | inc
1 Hartford Sq. West, Hartford CT 06106
860 548 0802
17 Railroad Avenue, Westerly RI 02891
401 596 7555
tectonarchitects.com

Notice:
This drawing is the property of Tecton Architects | inc The use, re-use or reproduction of this drawing for any purpose whatsoever without an expressed written agreement between Tecton Architects | inc and the user is prohibited. Rights to use the information on this sheet are not transferred until payment has been received for services rendered. Any rights so granted are non-transferable to other parties without the prior expressed written consent of Tecton Architects | inc
© 2012 Tecton Architects | inc

Consultant
CREATIVE ENVIRONMENTS CORP. CONSULTING ENGINEERS

Owner
THE UNIVERSITY OF RHODE ISLAND
THINK BIG WE DO

Project
University of Rhode Island
BURNSIDE HALL
BATHROOM RENOVATIONS & DOOR & SIGNAGE REPLACEMENT
KINGSTON, RI

Key Plan
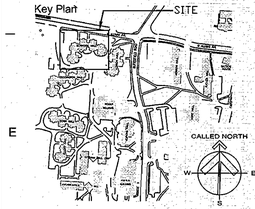

Seals

Issues

Date	Description
12/20/2012	FOR CONSTRUCTION

Revisions

No.	Date	Description
1	12/05/2012	REVIEW

Drawing Title
BATHROOM REFLFECTED CEILING PLANS

Issue Date:	12/20/2012
Project No:	KC.R.ROGW.2010.001
Scale:	AS NOTED
Project Manager:	MT
Production Leader:	MS
Project Architect:	MT
Peer Reviewer:	JM

Drawing Number
A2.302

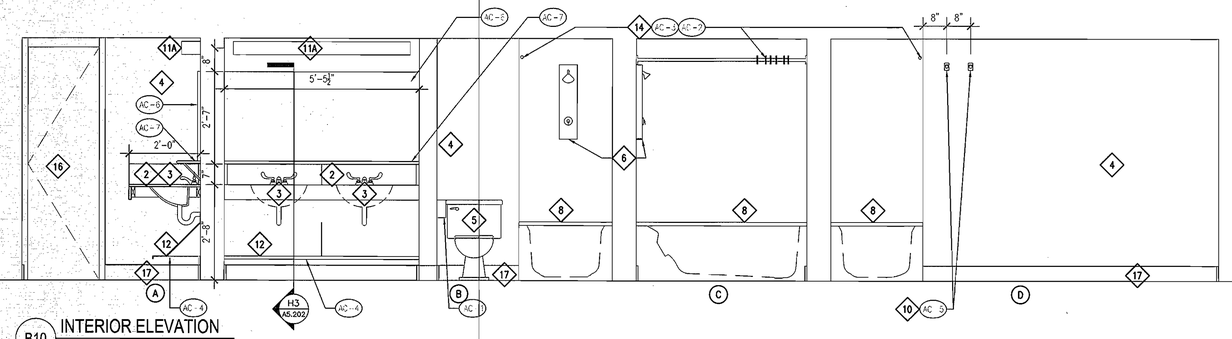

B10 INTERIOR ELEVATION
1/2"=1'-0"

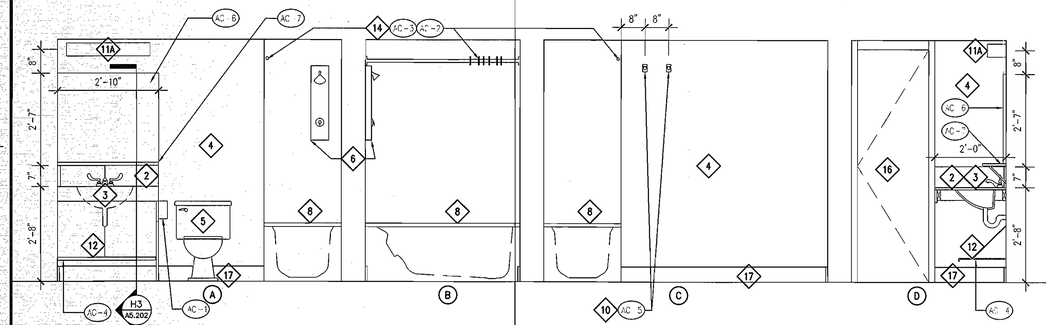

D10 INTERIOR ELEVATION
1/2"=1'-0"

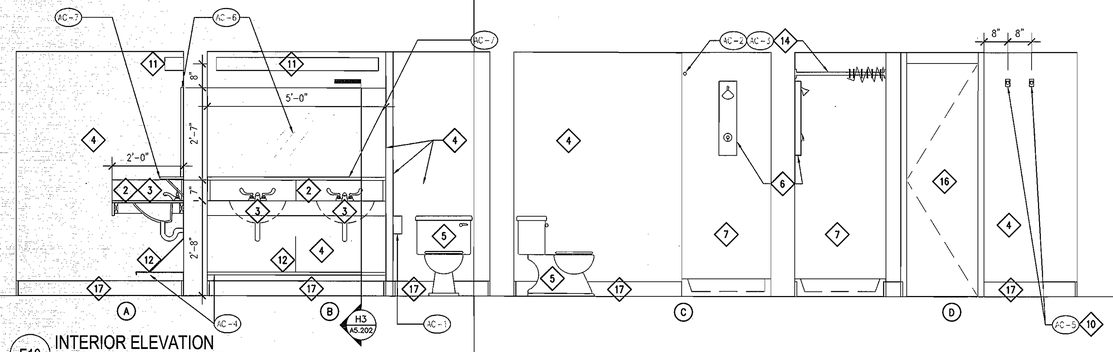

F10 INTERIOR ELEVATION
1/2"=1'-0"

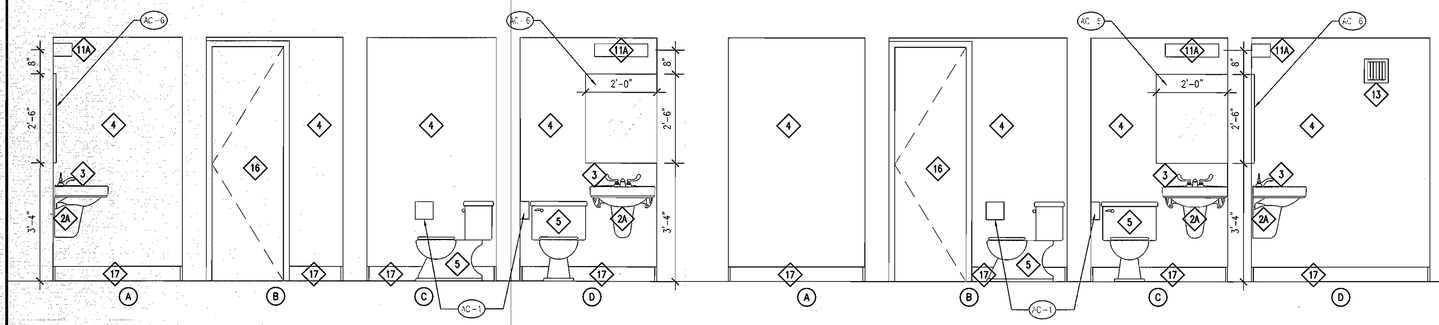

H10 INTERIOR ELEVATION
1/2"=1'-0"

H7 INTERIOR ELEVATION
1/2"=1'-0"

CONSTRUCTION NOTES

1. PREPARE SUBFLOOR AND INSTALL NEW 2X2 CERAMIC TILE FLOORING & COVE.
2. INSTALL NEW SOLID SURFACE COUNTER, BACK SPLASH, SIDE SPLASH AND INTEGRAL SINKS. CONNECT TO EXISTING SUPPLY AND DRAIN.
2A. INSTALL NEW WALL MOUNTED SINK CONNECT TO EXISTING SUPPLY AND DRAIN.
3. INSTALL NEW FAUCETS AND VALVES.
4. INSTALL FIBER REINFORCED PANELS FLOOR TO UNDERSIDE OF DECK ON ALL BATHROOM WALLS (EXCEPT @ SHOWER & BATHTUB STALLS – SEE ALSO DETAIL B10/A2.201).
5. INSTALL NEW TOILET AND RECONNECT TO SUPPLY AND DRAIN
6. INSTALL NEW BATHFITTERS DRAIN, VALVE AND SHOWERHEAD. (WORK TO BE PERFORMED BY BATHFITTERS).
7. INSTALL NEW BATHFITTERS SHOWER ENCLOSURES INCLUDING SHOWER PAN, WALL INSERTS & CEILING. (WORK TO BE PERFORMED BY BATHFITTERS)
8. INSTALL NEW BATHFITTERS BATHTUB LINER & WALL INSERTS. (WORK TO BE PERFORMED BY BATHFITTERS)
9. INSTALL NEW DRAIN. (WORK TO BE PERFORMED BY BATHFITTERS)
10. INSTALL NEW STAINLESS STEEL ROBE HOOKS @ 6'-0" AFF. REFER TO INTERIOR ELEVATIONS – A5.201/A5.202 FOR LOCATIONS
11. PROVIDE AND INSTALL ONE WALL MOUNTED UP/DOWN FLUORESCENT LIGHT FIXTURE ABOVE SINK AND ONE CEILING MOUNTED LIGHT FIXTURE IN FRONT OF SHOWER (SEE REFLECTED CEILING PLAN). INSTALLATION INCLUDES WIREMOLD, WIRE AND SWITCH
12. FURNISH AND INSTALL ONE 16" DEEP HEAVY DUTY, PLASTIC COATED METAL WIRE SHELF SET 8" A.F.F.
13. REINSTALL EXHAUST GRILLE IN CEILING.
14. INSTALL NEW SHOWER ROD AND CURTAIN AT EXISTING HEIGHT.
15. INSTALL ACCESS PANELS. REPLACE DAMAGED UNITS. (CONTINGENCY ALLOWANCE)
16. INSTALL NEW DOOR AND TRANSOM AS PER SCHEDULE. PATCH AND REPAIR EXISTING DOOR FRAME AND PAINT.
17. INSTALL NEW FLOOR DRAIN. – COORDINATE WITH P-DRAWINGS AND FINISHES

TOILET ACCESSORIES

AC-1	TOILET PAPER HOLDER. TO BE PROVIDED BY OWNER AND INSTALLED BY CONTRACTOR.
AC-2	STAINLESS STEEL, SATIN FINISH SHOWER ROD & MOUNTING BRACKETS.
AC-3	SHOWER CURTAIN AND SHOWER CURTAIN RINGS
AC-4	NEW HEAVY DUTY METAL WIRE SHELF – MOUNTED 8" A.F.F.
AC-5	NEW STAINLESS STEEL ROBE HOOKS MTD. 6'-0" A.F.F.
AC-6	NEW FRAMELESS MIRROR – REFER TO INTERIOR ELEVATIONS – A5.201/5.202 FOR SIZING.
AC-7	8" DEEP SOLID SURFACE PLASTIC SHELF.

NOTE:

1. BATHFITTERS INSTALLATION TO BE DONE LAST.

TectonArchitects | inc
1 Hartford Sq. West, Hartford CT 06106
860 548 0802
17 Railroad Avenue, Westerly RI 02891
401 596 7555
tectonarchitects.com

Notice:
This drawing is the property of Tecton Architects | inc The use, re-use or reproduction of this drawing for any purpose whatsoever without an expressed written agreement between Tecton Architects | inc and the user is prohibited. Rights to use the information on this sheet are not transferred until payment has been received for services rendered. Any rights so granted are non-transferable to other parties without the prior expressed written consent of Tecton Architects | inc

© 2012 Tecton Architects | inc

Consultant

CREATIVE ENVIRONMENTS CORP. CONSULTING ENGINEERS

Owner

THE UNIVERSITY OF RHODE ISLAND

THINK BIG WE DO

Project

University of Rhode Island
BURNSIDE HALL
BATHROOM RENOVATIONS & DOOR & SIGNAGE REPLACEMENT

KINGSTON, RI

Key Plan

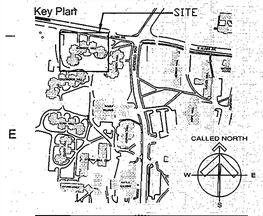

Seals

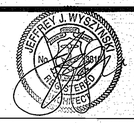

Issues

Date	Description
12/20/2012	FOR CONSTRUCTION

Revisions

No.	Date	Description
1	12/05/2012	REVIEW

Drawing Title

BATHROOM
INTERIOR ELEVATIONS & DETAILS

Issue Date:	12/20/2012
Project No:	KC.R.ROOW.2010.001
Scale:	AS NOTED
Project Manager:	MT
Production Leader:	MS
Project Architect:	MT
Peer Reviewer:	JM

Drawing Number

A5.201

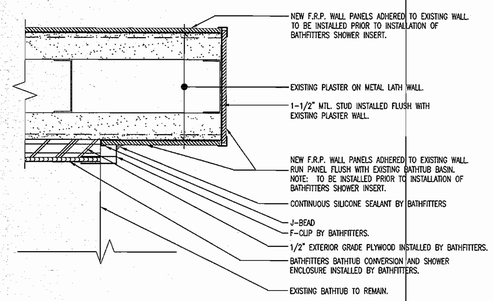

B10 F.R.P. END PANEL @ BATHFITTERS SHOWER ENCLOSURE
SCALE: 6"=1'-0"

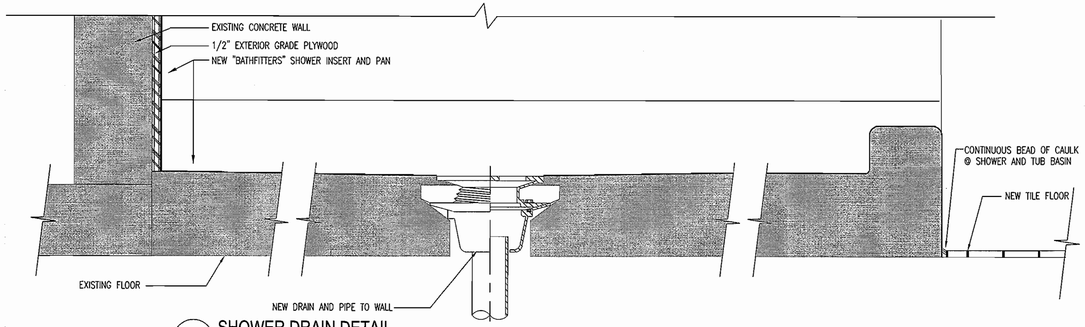

B6 SHOWER DRAIN DETAIL
SCALE: 3"=1'-0"

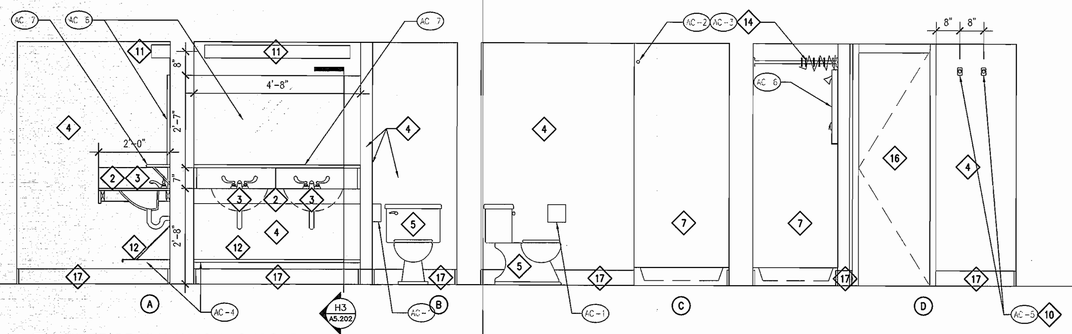

D10 INTERIOR ELEVATION - SECOND THIRD & FOURTH FLOORS
1/2"=1'-0"

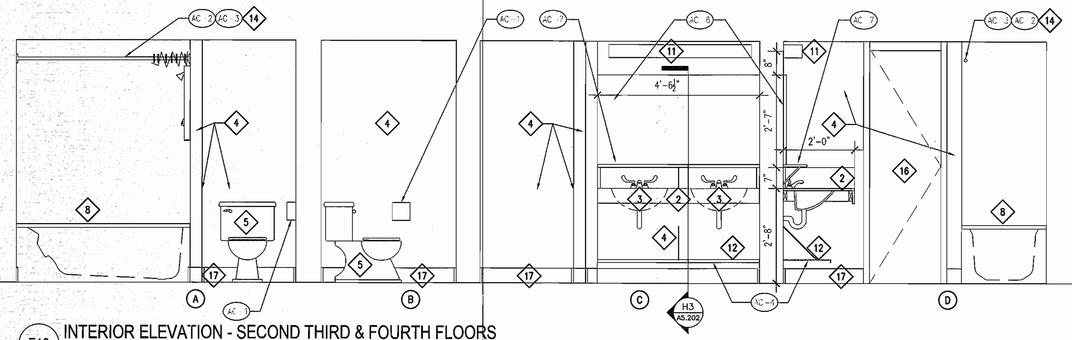

F10 INTERIOR ELEVATION - SECOND THIRD & FOURTH FLOORS
1/2"=1'-0"

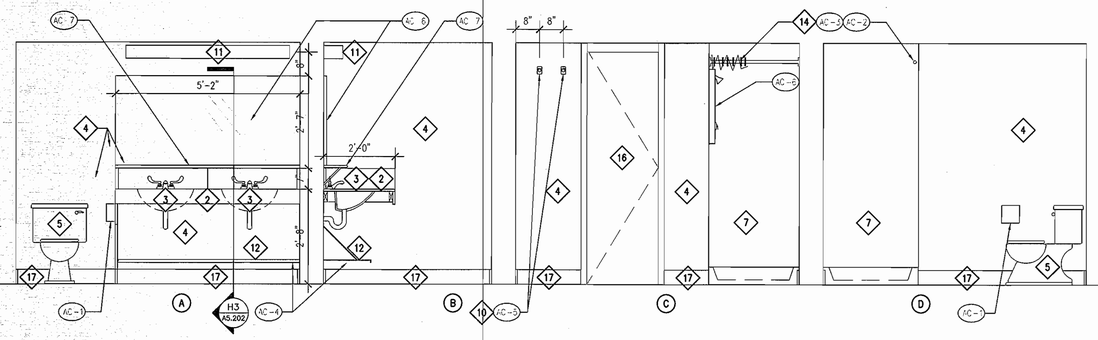

H10 INTERIOR ELEVATION
1/2"=1'-0"

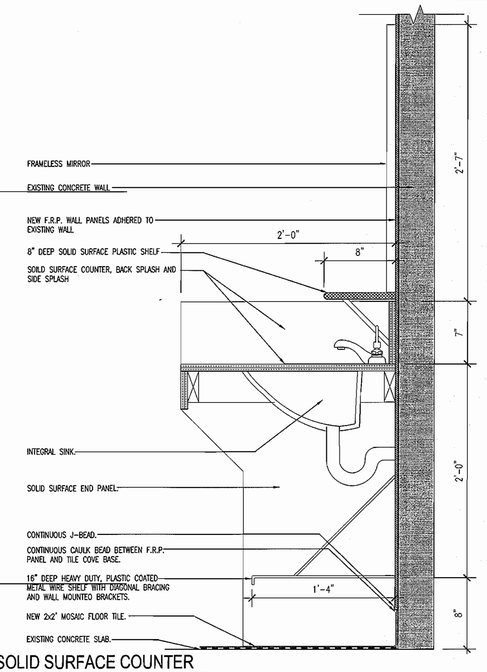

H3 SOLID SURFACE COUNTER
1-1/2"=1'-0"

CONSTRUCTION NOTES

1. PREPARE SUBFLOOR AND INSTALL NEW 2X2 CERAMIC TILE FLOORING & COVE.
2. INSTALL NEW SOLID SURFACE COUNTER, BACK SPLASH, SIDE SPLASH AND INTEGRAL SINKS. CONNECT TO EXISTING SUPPLY AND DRAIN.
2A. INSTALL NEW WALL MOUNTED SINK CONNECT TO EXISTING SUPPLY AND DRAIN.
3. INSTALL NEW FAUCETS AND VALVES.
4. INSTALL FIBER REINFORCED PANELS FLOOR TO UNDERSIDE OF DECK ON ALL BATHROOM WALLS (EXCEPT @ SHOWER & BATHTUB STALLS – SEE ALSO DETAIL B10/A2.201).
5. INSTALL NEW TOILET AND RECONNECT TO SUPPLY AND DRAIN
6. INSTALL NEW BATHFITTERS DRAIN, VALVE AND SHOWERHEAD. (WORK TO BE PERFORMED BY BATHFITTERS).
7. INSTALL NEW BATHFITTERS SHOWER ENCLOSURES INCLUDING SHOWER PAN, WALL INSERTS & CEILING. (WORK TO BE PERFORMED BY BATHFITTERS)
8. INSTALL NEW BATHFITTERS BATHTUB LINER & WALL INSERTS. (WORK TO BE PERFORMED BY BATHFITTERS)
9. INSTALL NEW DRAIN. (WORK TO BE PERFORMED BY BATHFITTERS)
10. INSTALL NEW STAINLESS STEEL ROBE HOOKS @ 6'-0" AFF. REFER TO INTERIOR ELEVATIONS – A5.201/A5.202 FOR LOCATIONS
11. PROVIDE AND INSTALL ONE WALL MOUNTED UP/DOWN FLUORESCENT LIGHT FIXTURE ABOVE SINK AND ONE CEILING MOUNTED LIGHT FIXTURE IN FRONT OF SHOWER (SEE REFLECTED CEILING PLAN). INSTALLATION INCLUDES WIREMOLD, WIRE AND SWITCH
12. FURNISH AND INSTALL ONE 16" DEEP HEAVY DUTY, PLASTIC COATED METAL WIRE SHELF SET 8" A.F.F.
13. REINSTALL EXHAUST GRILLE IN CEILING.
14. INSTALL NEW SHOWER ROD AND CURTAIN AT EXISTING HEIGHT.
15. INSTALL ACCESS PANELS. REPLACE DAMAGED UNITS. (CONTINGENCY ALLOWANCE)
16. INSTALL NEW DOOR AND TRANSOM AS PER SCHEDULE. PATCH AND REPAIR EXISTING DOOR FRAME AND PAINT.
17. INSTALL NEW FLOOR DRAIN. – COORDINATE WITH P-DRAWINGS AND FINISHES

TOILET ACCESSORIES

AC-1	TOILET PAPER HOLDER. TO BE PROVIDED BY OWNER AND INSTALLED BY CONTRACTOR.
AC-2	STAINLESS STEEL, SATIN FINISH SHOWER ROD & MOUNTING BRACKETS.
AC-3	SHOWER CURTAIN AND SHOWER CURTAIN RINGS
AC-4	NEW HEAVY DUTY METAL WIRE SHELF – MOUNTED 8" A.F.F.
AC-5	NEW STAINLESS STEEL ROBE HOOKS MTD. 6'-0" A.F.F.
AC-6	NEW FRAMELESS MIRROR – REFER TO INTERIOR ELEVATIONS – A5.201/5.202 FOR SIZING.
AC-7	8" DEEP SOLID SURFACE PLASTIC SHELF.

NOTE:

1. BATHFITTERS INSTALLATION TO BE DONE LAST.

TectonArchitects | inc
1 Hartford Sq. West, Hartford CT 06106
860 548 0802
17 Railroad Avenue, Westerly RI 02891
401 596 7555
tectonarchitects.com

Notice:
This drawing is the property of Tecton Architects | inc The use, re-use or reproduction of this drawing for any purpose whatsoever without an expressed written agreement between Tecton Architects | inc and the user is prohibited. Rights to use the information on this sheet are not transferred until payment has been received for services rendered. Any rights so granted are non-transferable to other parties without the prior expressed written consent of Tecton Architects | inc
© 2012 Tecton Architects | inc

Consultant
CREATIVE ENVIRONMENTS CORP. CONSULTING ENGINEERS

Owner
THE UNIVERSITY OF RHODE ISLAND
THINK BIG WE DO

Project
University of Rhode Island
BURNSIDE HALL
BATHROOM RENOVATIONS & DOOR & SIGNAGE REPLACEMENT
KINGSTON, RI

Key Plan
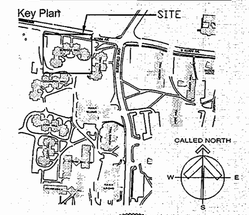

Seals

Issues

Date	Description
12/20/2012	FOR CONSTRUCTION

Revisions

No.	Date	Description
1	12/05/2012	REVIEW

Drawing Title
BATHROOM – INTERIOR ELEVATIONS & DETAILS

Issue Date:	12/20/2012
Project No:	KC.B.ROOM.2010.001
Scale:	AS NOTED
Project Manager:	MT
Production Leader:	MS
Project Architect:	MT
Peer Reviewer:	JM

Drawing Number
A5.202

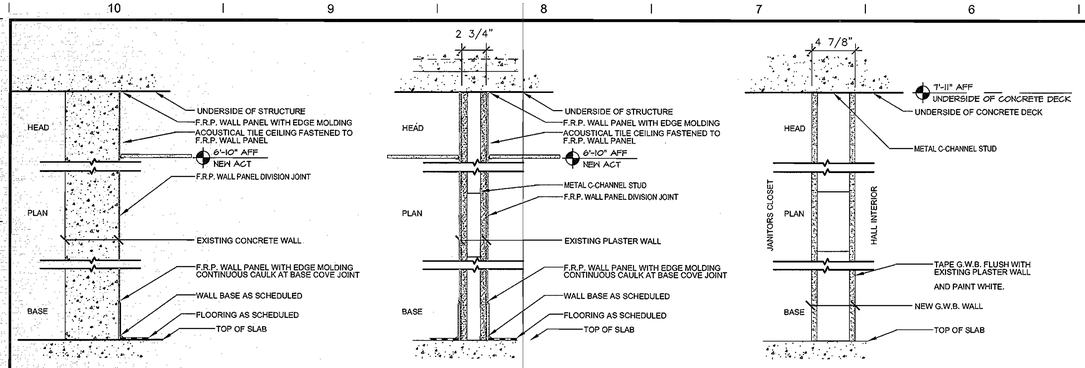

1 EXISTING 6" CONCRETE PARTITION

2 EXISTING PLASTER ON METAL LATH

3 NEW G.W.B. PARTITION ON MTL. STUD

TOILET ACCESSORIES

AC-1	TOILET PAPER HOLDER. TO BE PROVIDED BY OWNER AND INSTALLED BY CONTRACTOR.
AC-2	STAINLESS STEEL, SATIN FINISH SHOWER ROD & MOUNTING BRACKETS.
AC-3	SHOWER CURTAIN AND SHOWER CURTAIN RINGS
AC-4	NEW HEAVY DUTY METAL WIRE SHELF – MOUNTED 8" A.F.F.
AC-5	NEW STAINLESS STEEL ROBE HOOKS MTD. 6'-0" A.F.F.
AC-6	NEW FRAMELESS MIRROR – REFER TO INTERIOR ELEVATIONS – A5.201/5.202 FOR SIZING.
AC-7	8" DEEP SOLID SURFACE PLASTIC SHELF.

NOTE:

1. BATHFITTERS INSTALLATION TO BE DONE LAST.

FINISH LEGEND

- 2x2 MOSAIC FLOOR TILE – REFER TO SPECIFICATION
- CT-1 — 5" CERAMIC WALL TILE COVE BASE – REFER TO SPECIFICATION.
- F.R.P. — WALL COVERING – F.R.P. WALL PANEL ADHERED TO EXISTING WALL SURFACE TO BE INSTALLED ON ALL WALL SURFACE EXCEPT FOR WHERE BATHFITTERS TUB AND SHOWER ENCLOSURES ARE TO BE INSTALLED. – REFER TO SPECIFICATION & SEE ALSO DETAIL B10 /A2.201.
- ACT — FIBERGLASS ACOUSTICAL TILE CEILING – REFER TO SPECIFICATION.
- SS-1 — COUNTER TOP MATERIAL TO BE SOLID SURFACE – REFER TO SPECIFICATION.
- PT-1 — BONDO PATCH ANY DAMAGE TO EXISTING BATHROOM DOOR FRAMES, SAND SMOOTH AND PAINT – REFER TO SPECIFICATION.
- FLOOR DRAIN. SEE "P" DRAWINGS.

GENERAL FINISH NOTES

1. FINISH PLAN IS FOR REFERENCE & TO BE APPLICABLE AT ALL BATHROOMS.
2. COORDINATE ALL FINISHES WITH SPECIFICATIONS.

CONSTRUCTION NOTES

1. PREPARE SUBFLOOR AND INSTALL NEW 2X2 CERAMIC TILE FLOORING & COVE.
2. INSTALL NEW SOLID SURFACE COUNTER, BACK SPLASH, SIDE SPLASH AND INTEGRAL SINKS. CONNECT TO EXISTING SUPPLY AND DRAIN.
2A. INSTALL NEW WALL MOUNTED SINK CONNECT TO EXISTING SUPPLY AND DRAIN.
3. INSTALL NEW FAUCETS AND VALVES.
4. INSTALL FIBER REINFORCED PANELS FLOOR TO CEILING ON ALL BATHROOM WALLS (EXCEPT @ SHOWER & BATHTUB STALLS – REFER TO DETAIL B10/A2.201).
5. INSTALL NEW TOILET AND RECONNECT TO SUPPLY AND DRAIN
6. INSTALL NEW BATHFITTERS DRAIN, VALVE AND SHOWERHEAD. (WORK TO BE PERFORMED BY BATHFITTERS).
7. INSTALL NEW BATHFITTERS SHOWER ENCLOSURES INCLUDING SHOWER PAN, WALL INSERTS & CEILING. (WORK TO BE PERFORMED BY BATHFITTERS)
8. INSTALL NEW BATHFITTERS BATHTUB LINER & WALL INSERTS. (WORK TO BE PERFORMED BY BATHFITTERS)
9. INSTALL NEW DRAIN. (WORK TO BE PERFORMED BY BATHFITTERS)
10. INSTALL NEW STAINLESS STEEL ROBE HOOKS @ 6'-0" AFF. REFER TO INTERIOR ELEVATIONS – A5.201/A5.202 FOR LOCATIONS
11. PROVIDE AND INSTALL ONE WALL MOUNTED UP/DOWN FLUORESCENT LIGHT FIXTURE ABOVE SINK AND ONE CEILING MOUNTED LIGHT FIXTURE IN FRONT OF SHOWER (SEE REFLECTED CEILING PLAN). INSTALLATION INCLUDES WIREMOLD, WIRE AND SWITCH.
11A. PROVIDE AND INSTALL ONE WALL MOUNTED UP/DOWN FLUORESCENT LIGHT FIXTURE ABOVE SINK (SEE REFLECTED CEILING PLAN). INSTALLATION INCLUDES WIREMOLD, WIRE AND SWITCH.
12. FURNISH AND INSTALL ONE 16" DEEP HEAVY DUTY, PLASTIC COATED METAL WIRE SHELF SET 8" A.F.F.
13. REINSTALL EXHAUST GRILLE IN CEILING.
14. INSTALL NEW SHOWER ROD AND CURTAIN AT EXISTING HEIGHT.
15. INSTALL ACCESS PANELS. REPLACE DAMAGED UNITS. (CONTINGENCY ALLOWANCE)
16. INSTALL NEW DOOR AND TRANSOM AS PER SCHEDULE. PATCH AND REPAIR EXISTING DOOR FRAME AND PAINT.
17. 5" TILE COVE BASE ON ALL WALLS.
18. REINSTALL HEATER CABINET COVERS AND ENDS – APPLIES TO BATHROOM D100G AND ALL FOURTH FLOOR BATHROOMS.

C10 WALL TYPES
1-1/2"=1'-0"

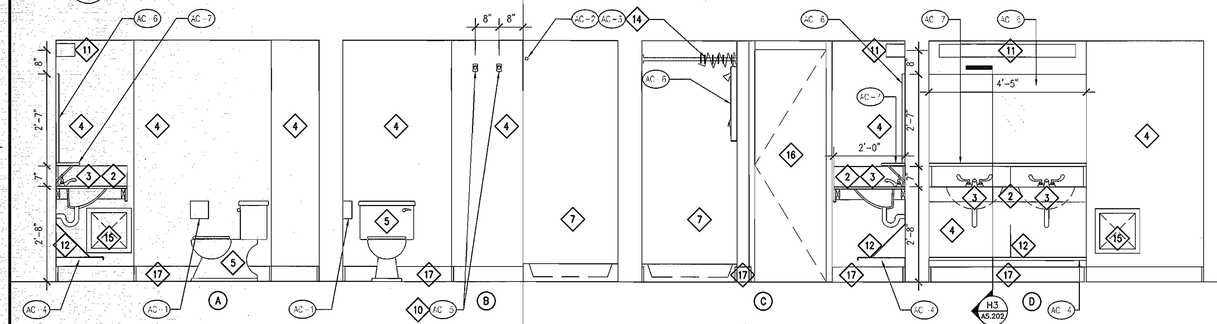

D10 INTERIOR ELEVATION - SECOND THIRD & FOURTH FLOORS
1/2"=1'-0"

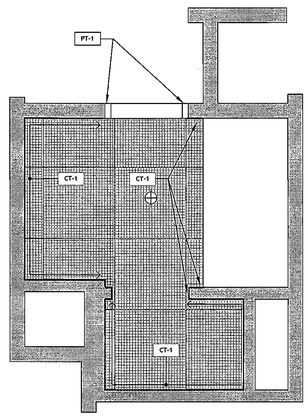

E4 TYPICAL FINISH FLOOR PLAN
1/2"=1'-0"

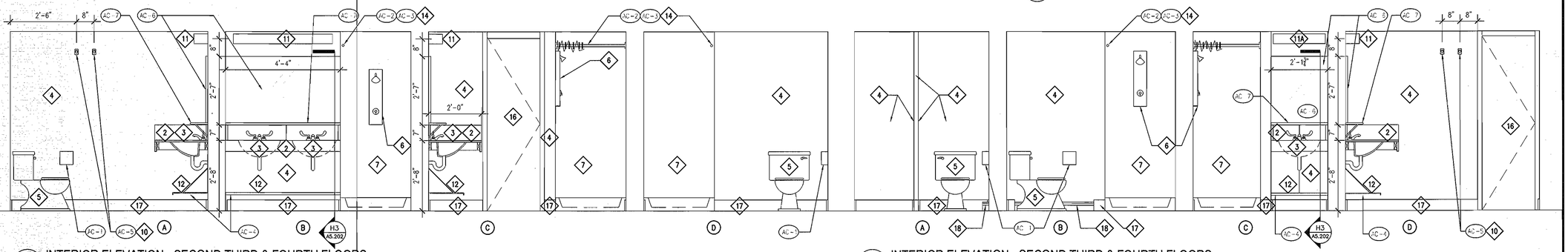

F10 INTERIOR ELEVATION - SECOND THIRD & FOURTH FLOORS
1/2"=1'-0"

f5 INTERIOR ELEVATION - SECOND THIRD & FOURTH FLOORS
1/2"=1'-0"

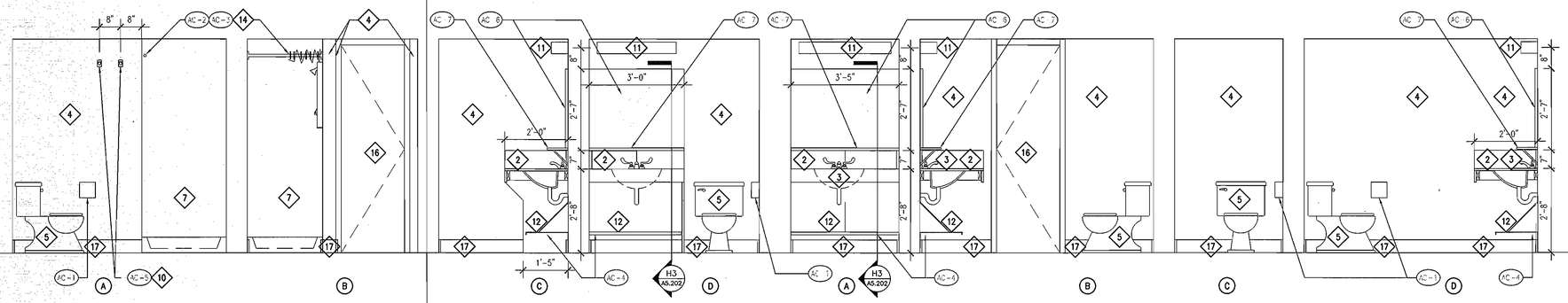

H10 INTERIOR ELEVATION - SECOND THIRD & FOURTH FLOORS
1/2"=1'-0"

H6 INTERIOR ELEVATION - SECOND THIRD & FOURTH FLOORS
1/2"=1'-0"

TectonArchitects | inc
1 Hartford Sq. West, Hartford CT 06106
860 548 0802
17 Railroad Avenue, Westerly RI 02891
401 596 7555
tectonarchitects.com

Notice:
This drawing is the property of Tecton Architects | Inc The use, re-use or reproduction of this drawing for any purpose whatsoever without an expressed written agreement between Tecton Architects | inc and the user is prohibited. Rights to use the information on this sheet are not transferred until payment has been received for services rendered. Any rights so granted are non-transferable to other parties without the prior expressed written consent of Tecton Architects | inc

© 2012 Tecton Architects | inc

Consultant
CREATIVE ENVIRONMENTS CORP. CONSULTING ENGINEERS

Owner
THE UNIVERSITY OF RHODE ISLAND
THINK BIG WE DO

Project
University of Rhode Island
BURNSIDE HALL
BATHROOM RENOVATIONS & DOOR & SIGNAGE REPLACEMENT
KINGSTON, RI

Key Plan
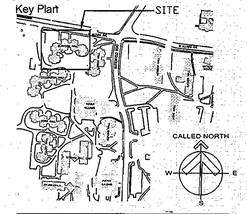

Seals

Issues

Date	Description
12/20/2012	FOR CONSTRUCTION

Revisions

No.	Date	Description
1	12/05/2012	REVIEW

Drawing Title

BATHROOM INTERIOR ELEVATIONS & DETAILS

Issue Date:	12/20/2012		
Project No:	KC.R.ROGW. 2010.001	Scale:	AS NOTED
Project Manager:	MT	Production Leader:	MS
Project Architect:	MT	Peer Reviewer:	JM

Drawing Number
A5.203

BASEMENT DOOR, FRAME & SIGNAGE SCHEDULE

NUMBER	SIZE	DOOR ELEV.	DOOR MAT'L	DOOR THK.	DOOR FINISH	FRAME MAT'L	FRAME THK.	FRAME FINISH	FRAME ELEV.	TRANSOM	DOOR RATING	HDWR.	SIGN TYPE	SIGN RM#	TRANSOM HT. (TOP OF DOOR TO TOP OF FRAME) REMARKS
A020	EXISTING TO REMAIN	EXIST.	EXIST.	EXIST.	EXIST.	EXIST.	EXIST	EXIST.	EXIST.		EXIST.	EXIST.	H3/F8/C9		
A020A	EXISTING TO REMAIN	EXIST.	EXIST.	EXIST.	EXIST.	EXIST.	EXIST	EXIST.	EXIST.		EXIST.	EXIST.	C7	A020A	
B015	EXISTING TO REMAIN	EXIST.	EXIST.	EXIST.	EXIST.	EXIST.	EXIST	EXIST.	EXIST.		EXIST.	EXIST.			
B016	EXISTING TO REMAIN	EXIST.	EXIST.	EXIST.	EXIST.	EXIST.	EXIST	EXIST.	EXIST.		EXIST.	EXIST.	C7	B016	
B017A	EXISTING TO REMAIN	EXIST.	EXIST.	EXIST.	EXIST.	EXIST.	EXIST	EXIST.	EXIST.		EXIST.	EXIST.	H3/F8/C9		
B017B	EXISTING TO REMAIN	EXIST.	EXIST.	EXIST.	EXIST.	EXIST.	EXIST	EXIST.	EXIST.		EXIST.	EXIST.	H3/F8/C9		
C007	EXISTING TO REMAIN	EXIST.	EXIST.	EXIST.	EXIST.	EXIST.	EXIST	EXIST.	EXIST.		EXIST.	EXIST.	C7	C007	
C008	EXISTING TO REMAIN	EXIST.	EXIST.	EXIST.	EXIST.	EXIST.	EXIST	EXIST.	EXIST.		EXIST.	EXIST.	C7	C008	
C009	EXISTING TO REMAIN	EXIST.	EXIST.	EXIST.	EXIST.	EXIST.	EXIST	EXIST.	EXIST.		EXIST.	EXIST.	C7	C009	
C010	EXISTING TO REMAIN	EXIST.	EXIST.	EXIST.	EXIST.	EXIST.	EXIST	EXIST.	EXIST.		EXIST.	EXIST.	H3/F8/C9		
C011	EXISTING TO REMAIN	EXIST.	EXIST.	EXIST.	EXIST.	EXIST.	EXIST	EXIST.	EXIST.		EXIST.	EXIST.	H3/F8/C9		
C012	EXISTING TO REMAIN	EXIST.	EXIST.	EXIST.	EXIST.	EXIST.	EXIST	EXIST.	EXIST.		EXIST.	EXIST.	C7	C012	
C012A	EXISTING TO REMAIN	EXIST.	EXIST.	EXIST.	EXIST.	EXIST.	EXIST	EXIST.	EXIST.		EXIST.	EXIST.	C10		
C013	EXISTING TO REMAIN	EXIST.	EXIST.	EXIST.	EXIST.	EXIST.	EXIST	EXIST.	EXIST.		EXIST.	EXIST.	C7	C013	
D005	EXISTING TO REMAIN	EXIST.	EXIST.	EXIST.	EXIST.	EXIST.	EXIST	EXIST.	EXIST.		EXIST.	EXIST.	C7	D005	
E002	EXISTING TO REMAIN	EXIST.	EXIST.	EXIST.	EXIST.	EXIST.	EXIST	EXIST.	EXIST.		EXIST.	EXIST.	H3/F8/C9		
E002A	EXISTING TO REMAIN	EXIST.	EXIST.	EXIST.	EXIST.	EXIST.	EXIST	EXIST.	EXIST.		EXIST.	EXIST.	C7	E002A	

FIRST FLOOR DOOR, FRAME & SIGNAGE SCHEDULE

NOTE: PRIOR TO ORDERING OF ANY UNITS ALL DIMENSIONS SHALL BE FIELD VERIFIED

NUMBER	SIZE	DOOR ELEV.	DOOR MTL.	DOOR THK.	DOOR FINISH	FRAME MT.	FRAME THK.	FRAME FINISH	FRAME ELEV.	TRANSOM	DOOR RATING	HDWR.	SIGN TYPE	SIGN RM#	TRANSOM HT. (TOP OF DOOR TO TOP OF FRAME) REMARKS
A100A	2'-4" x 6'-8"	A	WD.	1-3/4"	TRANS.	EXIST.	EXIST.	EXIST.	A		20 MIN	1	C3/F8	A100A	1'-3"
A100B	2'-4" x 6'-8"	A	WD.	1-3/4"	TRANS.	EXIST.	EXIST.	EXIST.	A		20 MIN	1	C3/F8	A100B	1'-3"
A100C	2'-4" x 6'-8"	A	WD.	1-3/4"	TRANS.	EXIST.	EXIST.	EXIST.	A		20 MIN	1	C3/F8	A100C	1'-3"
A100D	2'-4" x 6'-8"	A	WD.	1-3/4"	TRANS.	EXIST.	EXIST.	EXIST.	A		20 MIN	1	C3/F8	A100D	1'-3"
A100E	2'-4" x 6'-8"	A	WD.	1-3/4"	TRANS.	EXIST.	EXIST.	EXIST.	A		20 MIN	1	C3/F8	A100E	1'-3"
A100F	2'-0" x 6'-8"	B	WD.	1-3/4"	TRANS.	EXIST.	EXIST.	EXIST.	A		20 MIN	2	C10		1'-3"
A101	3'-4 x 7'-0"	C	H.M.	1-3/4"	P.T.	EXIST.	EXIST.	EXIST.	A		20 MIN	7			
A101A	3'-4 x 7'-0"	B	H.M.	1-3/4"	PT.	EXIST.	EXIST.	EXIST.	A		90 MIN	6	C5	A105	
A101B	3'-4 x 7'-0"	B	H.M.	1-3/4"	PT.	EXIST.	EXIST.	EXIST.	A		90 MIN	6	C5	A104	
A102A	2'-0" x 6'-8"	B	WD.	1-3/4"	TRANS.	EXIST.	EXIST.	EXIST.	A		20 MIN	3	C7	A102	
A102B	1'-10" x 6'-8"	B	WD.	1-3/4"	TRANS.	EXIST.	EXIST.	EXIST.	A		20 MIN	3	C7	A102	
A103	2'-0" x 6'-8"	B	WD.	1-3/4"	TRANS.	EXIST.	EXIST.	EXIST.	A		20 MIN	2	C10		
A106	2'-4" x 6'-8"	B	WD.	1-3/4"	TRANS.	EXIST.	EXIST.	EXIST.	A		20 MIN	3	C7	A106	
A106A	EXISTING TO REMAIN	EXIST.	EXIST.	EXIST.	EXIST.	EXIST.	EXIST.	EXIST.	EXIST.		EXIST.	EXIST.			EXISTING TO BE REMOVED AND INFILLED
A108A	3'-0" x 6'-8"	B	W.D.	1-3/4"	TRANS.	EXIST.	EXIST.	EXIST.	A		90 MIN	6	H3/F8/C9		
A108B	EXISTING TO REMAIN	EXIST.	EXIST.	EXIST.	EXIST.	EXIST.	EXIST.	EXIST.	EXIST.		EXIST.	EXIST.	H3/F8/C9		
A110	3'-0" x 6'-8"	B	WD.	1-3/4"	TRANS.	EXIST.	EXIST.	EXIST.	A		20 MIN	3	C7	A110	
B100A	2'-4" x 6'-8"	A	WD.	1-3/4"	TRANS.	EXIST.	EXIST.	EXIST.	A		20 MIN	1	C3/F8	B100A	1'-3"
B100B	2'-4" x 6'-8"	A	WD.	1-3/4"	TRANS.	EXIST.	EXIST.	EXIST.	A		20 MIN	1	C3/F8	B100B	1'-3"
B100C	2'-4" x 6'-8"	A	WD.	1-3/4"	TRANS.	EXIST.	EXIST.	EXIST.	A		20 MIN	1	C3/F8	B100C	1'-3"
B100D	2'-4" x 6'-8"	A	WD.	1-3/4"	TRANS.	EXIST.	EXIST.	EXIST.	A		20 MIN	1	C3/F8	B100D	1'-3"
B100E	2'-4" x 6'-8"	A	WD.	1-3/4"	TRANS.	EXIST.	EXIST.	EXIST.	A		20 MIN	1	C3/F8	B100E	1'-3"
B100F	2'-0" x 6'-8"	B	WD.	1-3/4"	TRANS.	EXIST.	EXIST.	EXIST.	A		20 MIN	2	C10		1'-3"
B101	3'-4 x 7'-0"	C	H.M.	1-3/4"	P.T.	EXIST.	EXIST.	EXIST.	A		20 MIN	7			
B101A	3'-4 x 7'-0"	B	H.M.	1-3/4"	PT.	EXIST.	EXIST.	EXIST.	A		90 MIN	6	C5	C105	
B101B	3'-4 x 7'-0"	B	H.M.	1-3/4"	PT.	EXIST.	EXIST.	EXIST.	A		90 MIN	6	C5	B104	
B102	2'-0" x 6'-8"	B	WD.	1-3/4"	TRANS.	EXIST.	EXIST.	EXIST.	A		20 MIN	3	C7	B102	
B103	2'-0" x 6'-8"	B	WD.	1-3/4"	TRANS.	EXIST.	EXIST.	EXIST.	A		20 MIN	2	C10		
B104	3'-0" x 6'-8"	B	WD.	1-3/4"	TRANS.	EXIST.	EXIST.	EXIST.	A		20 MIN	6	C7	A105	
B105	2'-10" x 6'-8"	B	WD.	1-3/4"	TRANS.	EXIST.	EXIST.	EXIST.	A		20 MIN	8	C7	B105	
B106	EXISTING TO REMAIN	EXIST.	EXIST.	EXIST.	EXIST.	EXIST.	EXIST.	EXIST.	EXIST.		EXIST.	EXIST.	C7	B106	
B107	3'-0" x 6'-8"	B	WD.	1-3/4"	TRANS.	EXIST.	EXIST.	EXIST.	A		20 MIN	3	C7	B107	
B108A	2'-0" x 6'-8"	B	WD.	1-3/4"	TRANS.	EXIST.	EXIST.	EXIST.	A		20 MIN	3	C7	B108A	
B108B	3'-0" x 6'-8"	B	W.D.	1-3/4"	TRANS.	EXIST.	EXIST.	EXIST.	A		90 MIN	6	H3/F8/C9		
B108C	EXISTING TO REMAIN	EXIST.	EXIST.	EXIST.	EXIST.	EXIST.	EXIST.	EXIST.	EXIST.		EXIST.	EXIST.	H3/F8/C9		
C101	3'-4 x 7'-0"	C	H.M.	1-3/4"	P.T.	EXIST.	EXIST.	EXIST.	A		20 MIN	7			
C101A	3'-4 x 7'-0"	B	H.M.	1-3/4"	PT.	EXIST.	EXIST.	EXIST.	A		90 MIN	6	C5	C104	
C101B	3'-4 x 7'-0"	B	H.M.	1-3/4"	PT.	EXIST.	EXIST.	EXIST.	A		90 MIN	6	C5	C105	
C102	2'-0" x 6'-8"	B	WD.	1-3/4"	TRANS.	EXIST.	EXIST.	EXIST.	A		20 MIN	2	C10		
C103	2'-0" x 6'-8"	B	WD.	1-3/4"	TRANS.	EXIST.	EXIST.	EXIST.	A		20 MIN	3	C7	C103	
C106A	2'-6" x 6'-8"	B	WD.	1-3/4"	TRANS.	EXIST.	EXIST.	EXIST.	A		20 MIN	4	C5	C106	
C106B	2'-6" x 6'-8"	B	WD.	1-3/4"	TRANS.	EXIST.	EXIST.	EXIST.	A		20 MIN	1	C3/F8	C112	
C107	2'-10" x 6'-8"	B	WD.	1-3/4"	TRANS.	EXIST.	EXIST.	EXIST.	A		20 MIN	3	C5	C107	
C108A	2'-0" x 6'-8"	B	WD.	1-3/4"	TRANS.	EXIST.	EXIST.	EXIST.	A		20 MIN	3	C7	C108A	
C108B	3'-0" x 6'-8"	B	WD.	1-3/4"	TRANS.	EXIST.	EXIST.	EXIST.	A		90 MIN	6	H3/F8/C9		
C108C	EXISTING TO REMAIN	EXIST.	EXIST.	EXIST.	EXIST.	EXIST.	EXIST.	EXIST.	EXIST.		EXIST.	EXIST.	H3/F8/C9		
C110	2'-10" x 6'-8"	B	WD.	1-3/4"	TRANS.	EXIST.	EXIST.	EXIST.	A		20 MIN	3	C7	C110	
C111	2'-8" x 6'-8"	B	WD.	1-3/4"	TRANS.	EXIST.	EXIST.	EXIST.	A		20 MIN	3	C7	C111	
C112	3'-0 x 6'-8"	D	H.M.	1-3/4"	P.T.	EXIST.	EXIST.	EXIST.	A		20 MIN	1			9-1/2"
C112A	2'-4" x 6'-8"	A	WD.	1-3/4"	TRANS.	EXIST.	EXIST.	EXIST.	A		20 MIN	5			1'-3"
C112B	2'-4" x 6'-8"	A	WD.	1-3/4"	TRANS.	EXIST.	EXIST.	EXIST.	A		20 MIN	5			1'-3"
C112C	2'-0" x 6'-8"	B	WD.	1-3/4"	TRANS.	EXIST.	EXIST.	EXIST.	A		20 MIN	2	C10		1'-3"
C112D	2'-0" x 6'-8"	B	WD.	1-3/4"	TRANS.	EXIST.	EXIST.	EXIST.	A		20 MIN	2			
C113	EXISTING TO REMAIN	EXIST.	EXIST.	EXIST.	EXIST.	EXIST.	EXIST.	EXIST.	EXIST.		EXIST.	EXIST.			
D100A	2'-4" x 6'-8"	A	WD.	1-3/4"	TRANS.	EXIST.	EXIST.	EXIST.	A		20 MIN	1	C3/F8	D100A	1'-3"
D100B	2'-4" x 6'-8"	A	WD.	1-3/4"	TRANS.	EXIST.	EXIST.	EXIST.	A		20 MIN	1	C3/F8	D100B	1'-3"
D100C	2'-4" x 6'-8"	A	WD.	1-3/4"	TRANS.	EXIST.	EXIST.	EXIST.	A		20 MIN	1	C3/F8	D100C	1'-3"
D100D	2'-4" x 6'-8"	A	WD.	1-3/4"	TRANS.	EXIST.	EXIST.	EXIST.	A		20 MIN	1	C3/F8	D100D	1'-3"
D100E	2'-4" x 6'-8"	A	WD.	1-3/4"	TRANS.	EXIST.	EXIST.	EXIST.	A		20 MIN	1	C3/F8	D100E	1'-3"
D100F	2'-0" x 6'-8"	B	WD.	1-3/4"	TRANS.	EXIST.	EXIST.	EXIST.	A		20 MIN	2	C10		1'-3"
D101	3'-4 x 7'-0"	C	H.M.	1-3/4"	P.T.	EXIST.	EXIST.	EXIST.	A		20 MIN	7			
D101A	3'-4 x 7'-0"	B	H.M.	1-3/4"	PT.	EXIST.	EXIST.	EXIST.	A		90 MIN	6	C5	D110	
D101B	3'-4 x 7'-0"	B	H.M.	1-3/4"	PT.	EXIST.	EXIST.	EXIST.	A		90 MIN	6	C5	C104	
D102	2'-0" x 6'-8"	B	WD.	1-3/4"	TRANS.	EXIST.	EXIST.	EXIST.	A		20 MIN	2	C10		
D103	2'-0" x 6'-8"	B	WD.	1-3/4"	TRANS.	EXIST.	EXIST.	EXIST.	A		20 MIN	3	C7	D103	
D104	2'-10" x 6'-8"	B	WD.	1-3/4"	TRANS.	EXIST.	EXIST.	EXIST.	A		20 MIN	4	C5	D104	
D105	EXISTING TO REMAIN	EXIST.	EXIST.	EXIST.	EXIST.	EXIST.	EXIST.	EXIST.	EXIST.		EXIST.	EXIST.	C7	D105	
D105A	2'-0" x 6'-8"	B	WD.	1-3/4"	TRANS.	EXIST.	EXIST.	EXIST.	A		20 MIN	3	C7	D105A	

NOTE: ALL GREY BOXES SHALL INDICATE A DOOR THAT IS ASSOCIATED WITH ALTERNATE #2

FIRST FLOOR DOOR, FRAME & SIGNAGE SCHEDULE

NOTE: PRIOR TO ORDERING OF ANY UNITS ALL DIMENSIONS SHALL BE FIELD VERIFIED

NUMBER	SIZE	DOOR ELEV.	DOOR MTL.	DOOR THK.	DOOR FINISH	FRAME MT.	FRAME THK.	FRAME FINISH	FRAME ELEV.	TRANSOM	DOOR RATING	HDWR.	SIGN TYPE	SIGN RM#	TRANSOM HT. (TOP OF DOOR TO TOP OF FRAME) REMARKS
D107	2'-10" x 6'-8"	B	WD.	1-3/4"	TRANS.	EXIST.	EXIST.	EXIST.	A		20 MIN	3	C7	D107	
A108A	3'-0" x 6'-8"	B	W.D.	1-3/4"	TRANS.	EXIST.	EXIST.	EXIST.	A		90 MIN	6	H3/F8/C9		
A108B	EXISTING TO REMAIN	EXIST.	EXIST.	EXIST.	EXIST.	EXIST.	EXIST.	EXIST.	EXIST.		EXIST.	EXIST.	H3/F8/C9		
D110	3'-0 x 7'-0"	B	H.M.	1-3/4"	PT.	EXIST.	EXIST.	EXIST.	A		20 MIN	8	C5	D110	
D111	2'-10" x 6'-8"	B	WD.	1-3/4"	TRANS.	EXIST.	EXIST.	EXIST.	A		20 MIN	3	C7	D111	
D112	3'-0" x 6'-8"	B	WD.	1-3/4"	TRANS.	EXIST.	EXIST.	EXIST.	A		20 MIN	4	C5	D112	
E100A	2'-4" x 6'-8"	A	WD.	1-3/4"	TRANS.	EXIST.	EXIST.	EXIST.	A		20 MIN	1	C3/F8	E100A	1'-3"
E100B	2'-4" x 6'-8"	A	WD.	1-3/4"	TRANS.	EXIST.	EXIST.	EXIST.	A		20 MIN	1	C3/F8	E100B	1'-3"
E100C	2'-4" x 6'-8"	A	WD.	1-3/4"	TRANS.	EXIST.	EXIST.	EXIST.	A		20 MIN	1	C3/F8	E100C	1'-3"
E100D	2'-4" x 6'-8"	A	WD.	1-3/4"	TRANS.	EXIST.	EXIST.	EXIST.	A		20 MIN	1	C3/F8	E100D	1'-3"
E100E	2'-4" x 6'-8"	A	WD.	1-3/4"	TRANS.	EXIST.	EXIST.	EXIST.	A		20 MIN	1	C3/F8	E100E	1'-3"
E100F	2'-0" x 6'-8"	B	WD.	1-3/4"	TRANS.	EXIST.	EXIST.	EXIST.	A		20 MIN	2	C10		1'-3"
E101	3'-4 x 7'-0"	C	H.M.	1-3/4"	P.T.	EXIST.	EXIST.	EXIST.	A		20 MIN	7			
E101A	3'-4 x 7'-0"	B	H.M.	1-3/4"	PT.	EXIST.	EXIST.	EXIST.	A		90 MIN	6	C5	E100	
E101B	3'-4 x 7'-0"	B	H.M.	1-3/4"	PT.	EXIST.	EXIST.	EXIST.	A		90 MIN	6	C5	E104	
E102	2'-0" x 6'-8"	B	WD.	1-3/4"	TRANS.	EXIST.	EXIST.	EXIST.	A		20 MIN	2	C10		
E103	2'-0" x 6'-8"	B	WD.	1-3/4"	TRANS.	EXIST.	EXIST.	EXIST.	A		20 MIN	3	C7	E103	
E108A	2'-0" x 6'-8"	B	WD.	1-3/4"	TRANS.	EXIST.	EXIST.	EXIST.	A		20 MIN	3	C7	E108A	
E108B	3'-0" x 6'-8"	B	WD.	1-3/4"	TRANS.	EXIST.	EXIST.	EXIST.	A		90 MIN	6	H3/F8/C9		
E108C	EXISTING TO REMAIN	EXIST.	EXIST.	EXIST.	EXIST.	EXIST.	EXIST.	EXIST.	EXIST.		EXIST.	EXIST.	H3/F8/C9		
E109	EXISTING TO REMAIN	EXIST.	EXIST.	EXIST.	EXIST.	EXIST.	EXIST.	EXIST.	EXIST.		EXIST.	EXIST.	C7	E109	
E110	2'-10" x 6'-8"	B	WD.	1-3/4"	TRANS.	EXIST.	EXIST.	EXIST.	A		20 MIN	3	C7	E110	
E111	2'-10" x 6'-8"	B	WD.	1-3/4"	TRANS.	EXIST.	EXIST.	EXIST.	A		20 MIN	4	C5	E111	

NOTE: ALL GREY BOXES SHALL INDICATE A DOOR THAT IS ASSOCIATED WITH ALTERNATE #2

TectonArchitects | inc

1 Hartford Sq. West, Hartford CT 06106
860 548 0802

17 Railroad Avenue, Westerly RI 02891
401 596 7555

tectonarchitects.com

Notice:
This drawing is the property of Tecton Architects | inc The use, re-use or reproduction of this drawing for any purpose whatsoever without an expressed written agreement between Tecton Architects | inc and the user is prohibited. Rights to use the information on this sheet are not transferred until payment has been received for services rendered. Any rights so granted are non-transferable to other parties without the prior expressed written consent of Tecton Architects | inc

© 2012 Tecton Architects | inc

Consultant

CREATIVE ENVIRONMENTS CORP. CONSULTING ENGINEERS

Owner

THE UNIVERSITY OF RHODE ISLAND

THINK BIG WE DO

Project

University of Rhode Island
BURNSIDE HALL
BATHROOM RENOVATIONS & DOOR & SIGNAGE REPLACEMENT

KINGSTON, RI

Key Plan

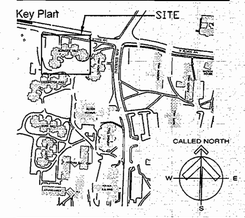

Seals

Issues

Date	Description
12/20/2012	FOR CONSTRUCTION

Revisions

No.	Date	Description
1	12/05/2012	REVIEW

Drawing Title

SIGN & DOOR SCHEDULE & DETAILS

Issue Date: 12/20/2012

Project No:	KC.R.BOGW. 2010.001	Scale:	AS NOTED
Project Manager:	MT	Production Leader:	MS
Project Architect:	MT	Peer Reviewer:	JM

Drawing Number

A8.101

SECOND FLOOR DOOR, FRAME & SIGNAGE SCHEDULE

NOTE: PRIOR TO ORDERING OF ANY UNITS ALL DIMENSIONS SHALL BE FIELD VERIFIED

ALTERNATE	NUMBER	SIZE	DOOR				FRAME				TRANSOM	DOOR RATING	HDWR.	SIGN		TRANSOM HT. (TOP OF DOOR TO TOP OF FRAME) REMARKS
			ELEV.	MTL.	THK.	FINISH	MT.	THK.	FINISH	ELEV.				TYPE	RM#	
	A200A	2'-4" x 7'-5 1/2"	A	WD.	1-3/4"	TRANS.	EXIST.	EXIST	EXIST.	A		20 MIN	1	C3/F8	A200A	
	A200B	2'-4" x 7'-5 1/2"	A	WD.	1-3/4"	TRANS.	EXIST.	EXIST	EXIST.	A		20 MIN	1	C3/F8	A200B	
	A200C	2'-4" x 7'-5 1/2"	A	WD.	1-3/4"	TRANS.	EXIST.	EXIST	EXIST.	A		20 MIN	1	C3/F8	A200C	
	A200D	2'-4" x 7'-5 1/2"	A	WD.	1-3/4"	TRANS.	EXIST.	EXIST	EXIST.	A		20 MIN	1	C3/F8	A200D	
	A200E	2'-0" x 6'-8"	B	WD.	1-3/4"	TRANS.	EXIST.	EXIST	EXIST.	A		20 MIN	2	C10		9 1/2"
	A200F	2'-0" x 6'-8"	B	WD.	1-3/4"	TRANS.	EXIST.	EXIST	EXIST.	A		20 MIN	2	C10		9 1/2"
	A201A	2'-4" x 7'-5 1/2"	A	WD.	1-3/4"	TRANS.	EXIST.	EXIST	EXIST.	A		20 MIN	1	C3/F8	A201A	
	A201B	2'-4" x 7'-5 1/2"	A	WD.	1-3/4"	TRANS.	EXIST.	EXIST	EXIST.	A		20 MIN	1	C3/F8	A201B	
	A201C	2'-4" x 7'-5 1/2"	A	WD.	1-3/4"	TRANS.	EXIST.	EXIST	EXIST.	A		20 MIN	1	C3/F8	A201C	
	A201D	2'-4" x 7'-5 1/2"	A	WD.	1-3/4"	TRANS.	EXIST.	EXIST	EXIST.	A		20 MIN	1	C3/F8	A201D	
	A201E	2'-0" x 6'-8"	B	WD.	1-3/4"	TRANS.	EXIST.	EXIST	EXIST.	A		20 MIN	2	C10		9 1/2"
	A201F	2'-0" x 6'-8"	B	WD.	1-3/4"	TRANS.	EXIST.	EXIST	EXIST.	A		20 MIN	2	C10		9 1/2"
	A202A	2'-0" x 6'-8"	B	WD.	1-3/4"	TRANS.	EXIST.	EXIST	EXIST.	A		20 MIN	3	C7	A202A	9 1/2"
	A202B	2'-0" x 6'-8"	B	WD.	1-3/4"	TRANS.	EXIST.	EXIST	EXIST.	A		20 MIN	3	C7	A202B	9 1/2"
	A202C	EXISTING TO REMAIN	EXIST.	EXIST.	EXIST.	EXIST.	EXIST.	EXIST.	EXIST.	EXIST.		EXIST.	EXIST.	H3/F8/C9		DOORS TO STAIRS PREVIOUSLY REPLACED
	A202D	EXISTING TO REMAIN	EXIST.	EXIST.	EXIST.	EXIST.	EXIST.	EXIST.	EXIST.	EXIST.		EXIST.	EXIST.	H3/F8/C9		DOORS TO STAIRS PREVIOUSLY REPLACED
	B200A	2'-4" x 7'-5 1/2"	A	WD.	1-3/4"	TRANS.	EXIST.	EXIST	EXIST.	A		20 MIN	1	C3/F8	B200A	
	B200B	2'-4" x 7'-5 1/2"	A	WD.	1-3/4"	TRANS.	EXIST.	EXIST	EXIST.	A		20 MIN	1	C3/F8	B200B	
	B200C	2'-4" x 7'-5 1/2"	A	WD.	1-3/4"	TRANS.	EXIST.	EXIST	EXIST.	A		20 MIN	1	C3/F8	B200C	
	B200D	2'-4" x 7'-5 1/2"	A	WD.	1-3/4"	TRANS.	EXIST.	EXIST	EXIST.	A		20 MIN	1	C3/F8	B200D	
	B200E	2'-0" x 6'-8"	B	WD.	1-3/4"	TRANS.	EXIST.	EXIST	EXIST.	A		20 MIN	2	C10		9 1/2"
	B200F	2'-0" x 6'-8"	B	WD.	1-3/4"	TRANS.	EXIST.	EXIST	EXIST.	A		20 MIN	2	C10		9 1/2"
	B201A	2'-4" x 7'-5 1/2"	A	WD.	1-3/4"	TRANS.	EXIST.	EXIST	EXIST.	A		20 MIN	1	C3/F8	B201A	
	B201B	2'-4" x 7'-5 1/2"	A	WD.	1-3/4"	TRANS.	EXIST.	EXIST	EXIST.	A		20 MIN	1	C3/F8	B201B	
	B201C	2'-4" x 7'-5 1/2"	A	WD.	1-3/4"	TRANS.	EXIST.	EXIST	EXIST.	A		20 MIN	1	C3/F8	B201C	
	B201D	2'-4" x 7'-5 1/2"	A	WD.	1-3/4"	TRANS.	EXIST.	EXIST	EXIST.	A		20 MIN	1	C3/F8	B201D	
	B201E	2'-0" x 6'-8"	B	WD.	1-3/4"	TRANS.	EXIST.	EXIST	EXIST.	A		20 MIN	2	C10		9 1/2"
	B200F	2'-0" x 6'-8"	B	WD.	1-3/4"	TRANS.	EXIST.	EXIST	EXIST.	A		20 MIN	2	C10		9 1/2"
	B202A	2'-0" x 6'-8"	B	WD.	1-3/4"	TRANS.	EXIST.	EXIST	EXIST.	A		20 MIN	3	C7	B202A	9 1/2"
	B202B	2'-0" x 6'-8"	B	WD.	1-3/4"	TRANS.	EXIST.	EXIST	EXIST.	A		20 MIN	3	C7	B202B	9 1/2"
	B202C	EXISTING TO REMAIN	EXIST.	EXIST.	EXIST.	EXIST.	EXIST.	EXIST.	EXIST.	EXIST.		EXIST.	EXIST.	H3/F8/C9		DOORS TO STAIRS PREVIOUSLY REPLACED
	B202D	EXISTING TO REMAIN	EXIST.	EXIST.	EXIST.	EXIST.	EXIST.	EXIST.	EXIST.	EXIST.		EXIST.	EXIST.	H3/F8/C9		DOORS TO STAIRS PREVIOUSLY REPLACED
	C200A	2'-4" x 7'-5 1/2"	A	WD.	1-3/4"	TRANS.	EXIST.	EXIST	EXIST.	A		20 MIN	1	C3/F8	C200A	
	C200B	2'-4" x 7'-5 1/2"	A	WD.	1-3/4"	TRANS.	EXIST.	EXIST	EXIST.	A		20 MIN	1	C3/F8	C200B	
	C200C	2'-4" x 7'-5 1/2"	A	WD.	1-3/4"	TRANS.	EXIST.	EXIST	EXIST.	A		20 MIN	1	C3/F8	C200C	
	C200D	2'-4" x 7'-5 1/2"	A	WD.	1-3/4"	TRANS.	EXIST.	EXIST	EXIST.	A		20 MIN	1	C3/F8	C200D	
	C200E	2'-0" x 6'-8"	B	WD.	1-3/4"	TRANS.	EXIST.	EXIST	EXIST.	A		20 MIN	2	C10		9 1/2"
	C200F	2'-0" x 6'-8"	B	WD.	1-3/4"	TRANS.	EXIST.	EXIST	EXIST.	A		20 MIN	2	C10		9 1/2"
	C201A	2'-4" x 7'-5 1/2"	A	WD.	1-3/4"	TRANS.	EXIST.	EXIST	EXIST.	A		20 MIN	1	C3/F8	C201A	
	C201B	2'-4" x 7'-5 1/2"	A	WD.	1-3/4"	TRANS.	EXIST.	EXIST	EXIST.	A		20 MIN	1	C3/F8	C201B	
	C201C	2'-4" x 7'-5 1/2"	A	WD.	1-3/4"	TRANS.	EXIST.	EXIST	EXIST.	A		20 MIN	1	C3/F8	C201C	
	C201D	2'-4" x 7'-5 1/2"	A	WD.	1-3/4"	TRANS.	EXIST.	EXIST	EXIST.	A		20 MIN	1	C3/F8	C201D	
	C201E	2'-0" x 6'-8"	B	WD.	1-3/4"	TRANS.	EXIST.	EXIST	EXIST.	A		20 MIN	2	C10		9 1/2"
	C201F	2'-0" x 6'-8"	B	WD.	1-3/4"	TRANS.	EXIST.	EXIST	EXIST.	A		20 MIN	2	C10		9 1/2"
	C202A	2'-0" x 6'-8"	B	WD.	1-3/4"	TRANS.	EXIST.	EXIST	EXIST.	A		20 MIN	3	C7	C202A	9 1/2"
	C202B	2'-0" x 6'-8"	B	WD.	1-3/4"	TRANS.	EXIST.	EXIST	EXIST.	A		20 MIN	3	C7	C202B	9 1/2"
	C202C	EXISTING TO REMAIN	EXIST.	EXIST.	EXIST.	EXIST.	EXIST.	EXIST.	EXIST.	EXIST.		EXIST.	EXIST.	H3/F8/C9		DOORS TO STAIRS PREVIOUSLY REPLACED
	C202D	EXISTING TO REMAIN	EXIST.	EXIST.	EXIST.	EXIST.	EXIST.	EXIST.	EXIST.	EXIST.		EXIST.	EXIST.	H3/F8/C9		DOORS TO STAIRS PREVIOUSLY REPLACED
	D200A	2'-4" x 7'-5 1/2"	A	WD.	1-3/4"	TRANS.	EXIST.	EXIST	EXIST.	A		20 MIN	1	C3/F8	D200A	
	D200B	2'-4" x 7'-5 1/2"	A	WD.	1-3/4"	TRANS.	EXIST.	EXIST	EXIST.	A		20 MIN	1	C3/F8	D200B	
	D200C	2'-4" x 7'-5 1/2"	A	WD.	1-3/4"	TRANS.	EXIST.	EXIST	EXIST.	A		20 MIN	1	C3/F8	D200C	
	D200D	2'-4" x 7'-5 1/2"	A	WD.	1-3/4"	TRANS.	EXIST.	EXIST	EXIST.	A		20 MIN	1	C3/F8	D200D	
	D200E	2'-0" x 6'-8"	B	WD.	1-3/4"	TRANS.	EXIST.	EXIST	EXIST.	A		20 MIN	2	C10		9 1/2"
	D200F	2'-0" x 6'-8"	B	WD.	1-3/4"	TRANS.	EXIST.	EXIST	EXIST.	A		20 MIN	2	C10		9 1/2"
	D201A	2'-4" x 7'-5 1/2"	A	WD.	1-3/4"	TRANS.	EXIST.	EXIST	EXIST.	A		20 MIN	1	C3/F8	D201A	
	D201B	2'-4" x 7'-5 1/2"	A	WD.	1-3/4"	TRANS.	EXIST.	EXIST	EXIST.	A		20 MIN	1	C3/F8	D201B	
	D201C	2'-4" x 7'-5 1/2"	A	WD.	1-3/4"	TRANS.	EXIST.	EXIST	EXIST.	A		20 MIN	1	C3/F8	D201C	
	D201D	2'-4" x 7'-5 1/2"	A	WD.	1-3/4"	TRANS.	EXIST.	EXIST	EXIST.	A		20 MIN	1	C3/F8	D201D	
	D201E	2'-0" x 6'-8"	B	WD.	1-3/4"	TRANS.	EXIST.	EXIST	EXIST.	A		20 MIN	2	C10		9 1/2"
	D200F	2'-0" x 6'-8"	B	WD.	1-3/4"	TRANS.	EXIST.	EXIST	EXIST.	A		20 MIN	2	C10		9 1/2"
	D200G	2'-0" x 6'-8"	B	WD.	1-3/4"	TRANS.	EXIST.	EXIST	EXIST.	A		20 MIN	2			9 1/2"
	D202A	2'-0" x 6'-8"	B	WD.	1-3/4"	TRANS.	EXIST.	EXIST	EXIST.	A		20 MIN	3	C7	D202A	9 1/2"
	D202B	2'-0" x 6'-8"	B	WD.	1-3/4"	TRANS.	EXIST.	EXIST	EXIST.	A		20 MIN	3	C7	D202B	9 1/2"
	D202C	EXISTING TO REMAIN	EXIST.	EXIST.	EXIST.	EXIST.	EXIST.	EXIST.	EXIST.	EXIST.		EXIST.	EXIST.	H3/F8/C9		DOORS TO STAIRS PREVIOUSLY REPLACED
	D202D	EXISTING TO REMAIN	EXIST.	EXIST.	EXIST.	EXIST.	EXIST.	EXIST.	EXIST.	EXIST.		EXIST.	EXIST.	H3/F8/C9		DOORS TO STAIRS PREVIOUSLY REPLACED
	E200A	2'-4" x 7'-5 1/2"	A	WD.	1-3/4"	TRANS.	EXIST.	EXIST	EXIST.	A		20 MIN	1	C3/F8	E200A	
	E200B	2'-4" x 7'-5 1/2"	A	WD.	1-3/4"	TRANS.	EXIST.	EXIST	EXIST.	A		20 MIN	1	C3/F8	E200B	
	E200C	2'-4" x 7'-5 1/2"	A	WD.	1-3/4"	TRANS.	EXIST.	EXIST	EXIST.	A		20 MIN	1	C3/F8	E200C	
	E200D	2'-4" x 7'-5 1/2"	A	WD.	1-3/4"	TRANS.	EXIST.	EXIST	EXIST.	A		20 MIN	1	C3/F8	E200D	
	E200E	2'-4" x 7'-5 1/2"	A	WD.	1-3/4"	TRANS.	EXIST.	EXIST	EXIST.	A		20 MIN	1	C3/F8	E200E	
	E200F	2'-0" x 6'-8"	B	WD.	1-3/4"	TRANS.	EXIST.	EXIST	EXIST.	A		20 MIN	2	C10		9 1/2"
	E200G	2'-0" x 6'-8"	B	WD.	1-3/4"	TRANS.	EXIST.	EXIST	EXIST.	A		20 MIN	2	C10		9 1/2"
	E201A	2'-4" x 7'-5 1/2"	A	WD.	1-3/4"	TRANS.	EXIST.	EXIST	EXIST.	A		20 MIN	1	C3/F8	E201A	
	E201B	2'-4" x 7'-5 1/2"	A	WD.	1-3/4"	TRANS.	EXIST.	EXIST	EXIST.	A		20 MIN	1	C3/F8	E201B	
	E201C	2'-4" x 7'-5 1/2"	A	WD.	1-3/4"	TRANS.	EXIST.	EXIST	EXIST.	A		20 MIN	1	C3/F8	E201C	
	E201D	2'-4" x 7'-5 1/2"	A	WD.	1-3/4"	TRANS.	EXIST.	EXIST	EXIST.	A		20 MIN	1	C3/F8	E201D	
	E200E	2'-0" x 6'-8"	B	WD.	1-3/4"	TRANS.	EXIST.	EXIST	EXIST.	A		20 MIN	2	C10		9 1/2"
	E200F	2'-0" x 6'-8"	B	WD.	1-3/4"	TRANS.	EXIST.	EXIST	EXIST.	A		20 MIN	2	C10		9 1/2"
	E202A	2'-0" x 6'-8"	B	WD.	1-3/4"	TRANS.	EXIST.	EXIST	EXIST.	A		20 MIN	3	C7	E202A	9 1/2"
	E202B	2'-0" x 6'-8"	B	WD.	1-3/4"	TRANS.	EXIST.	EXIST	EXIST.	A		20 MIN	3	C7	E202B	9 1/2"
	E202C	EXISTING TO REMAIN	EXIST.	EXIST.	EXIST.	EXIST.	EXIST.	EXIST.	EXIST.	EXIST.		EXIST.	EXIST.	H3/F8/C9		DOORS TO STAIRS PREVIOUSLY REPLACED
	E202D	EXISTING TO REMAIN	EXIST.	EXIST.	EXIST.	EXIST.	EXIST.	EXIST.	EXIST.	EXIST.		EXIST.	EXIST.	H3/F8/C9		DOORS TO STAIRS PREVIOUSLY REPLACED

NOTE: ALL GREY BOXES SHALL INDICATE A DOOR THAT IS ASSOCIATED WITH ALTERNATE #2

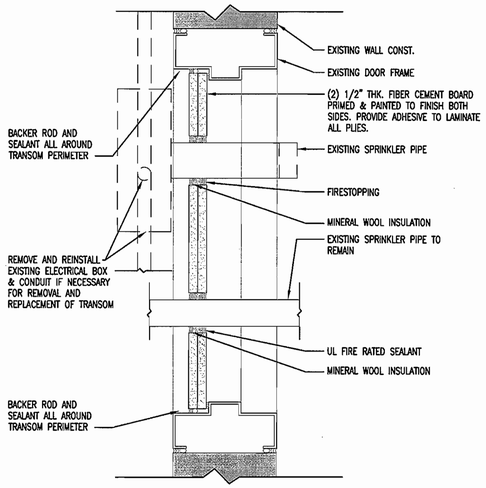

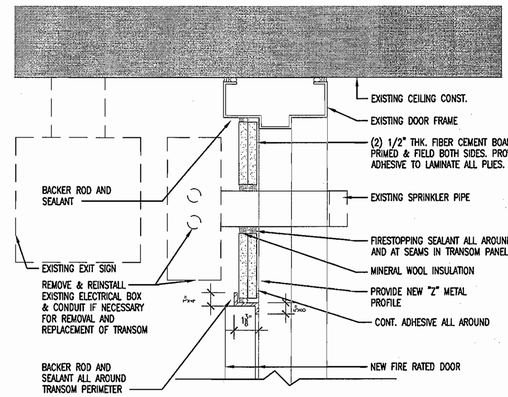

E5 TRANSOM HORIZONTAL SECTION

3" = 1'-0" SIM. TO U.L. #(W-L-1016)

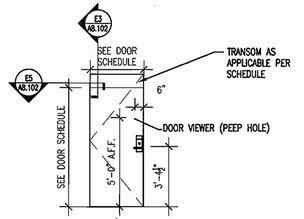

E5 TRANSOM VERTICAL SECTION

3" = 1'-0" SIM. TO U.L. #(W-L-1016)

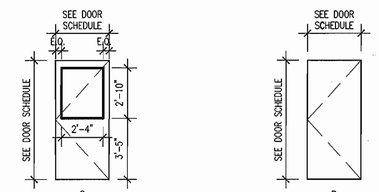

G5 DOOR ELEVATIONS

N.T.S.

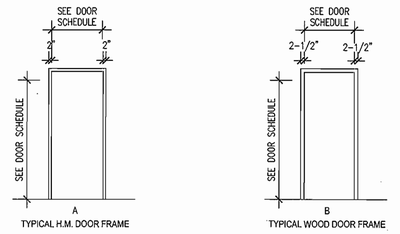

H5 FRAME ELEVATIONS

N.T.S.

TectonArchitects | inc

1 Hartford Sq. West, Hartford CT 06106
860 548 0802

17 Railroad Avenue, Westerly RI 02891
401 596 7555

tectonarchitects.com

Notice:
This drawing is the property of Tecton Architects | inc The use, re-use or reproduction of this drawing for any purpose whatsoever without an expressed written agreement between Tecton Architects | inc and the user is prohibited. Rights to use the information on this sheet are not transferred until payment has been received for services rendered. Any rights so granted are non-transferable to other parties without the prior expressed written consent of Tecton Architects | inc

© 2012 Tecton Architects | inc

Consultant

CREATIVE ENVIRONMENTS CORP. CONSULTING ENGINEERS

Owner

THE UNIVERSITY OF RHODE ISLAND

THINK BIG WE DO

Project

University of Rhode Island
BURNSIDE HALL
BATHROOM RENOVATIONS & DOOR & SIGNAGE REPLACEMENT

KINGSTON, RI

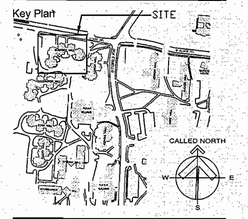

Seals

Issues

Date	Description
12/20/2012	FOR CONSTRUCTION

Revisions

No.	Date	Description
1	12/05/2012	REVIEW

Drawing Title

SIGN & DOOR SCHEDULE & DETAILS

Issue Date:	12/20/2012
Project No: KC.R.ROGW.2010.001	Scale: AS NOTED
Project Manager: MT	Production Leader: MS
Project Architect: MT	Peer Reviewer: JM

Drawing Number

A8.102

THIRD FLOOR DOOR, FRAME & SIGNAGE SCHEDULE

NOTE: PRIOR TO ORDERING OF ANY UNITS ALL DIMENSIONS SHALL BE FIELD VERIFIED

ALTERNATE	NUMBER	SIZE	DOOR ELEV.	DOOR MTL.	DOOR THK.	DOOR FINISH	FRAME MT.	FRAME THK.	FRAME FINISH	FRAME ELEV.	TRANSOM	DOOR RATING	HDWR.	SIGN TYPE	SIGN RM#	TRANSOM HT. (TOP OF DOOR TO TOP OF FRAME) REMARKS
	A300A	2'-4" x 7'-5 1/2"	A	WD.	1-3/4"	TRANS.	EXIST.	EXIST.	EXIST.	A		20 MIN	1	C3/F8	A300A	
	A300B	2'-4" x 7'-5 1/2"	A	WD.	1-3/4"	TRANS.	EXIST.	EXIST.	EXIST.	A		20 MIN	1	C3/F8	A300B	
	A300C	2'-4" x 7'-5 1/2"	A	WD.	1-3/4"	TRANS.	EXIST.	EXIST.	EXIST.	A		20 MIN	1	C3/F8	A300C	
	A300D	2'-4" x 7'-5 1/2"	A	WD.	1-3/4"	TRANS.	EXIST.	EXIST.	EXIST.	A		20 MIN	1	C3/F8	A300D	
	A300E	2'-0" x 6'-8"	B	WD.	1-3/4"	TRANS.	EXIST.	EXIST.	EXIST.	A		20 MIN	2	C10		9 1/2"
	A300F	2'-0" x 6'-8"	B	WD.	1-3/4"	TRANS.	EXIST.	EXIST.	EXIST.	A		20 MIN	2	C10		9 1/2"
	A301A	2'-4" x 7'-5 1/2"	A	WD.	1-3/4"	TRANS.	EXIST.	EXIST.	EXIST.	A		20 MIN	1	C3/F8	A301A	
	A301B	2'-4" x 7'-5 1/2"	A	WD.	1-3/4"	TRANS.	EXIST.	EXIST.	EXIST.	A		20 MIN	1	C3/F8	A301B	
	A301C	2'-4" x 7'-5 1/2"	A	WD.	1-3/4"	TRANS.	EXIST.	EXIST.	EXIST.	A		20 MIN	1	C3/F8	A301C	
	A301D	2'-4" x 7'-5 1/2"	A	WD.	1-3/4"	TRANS.	EXIST.	EXIST.	EXIST.	A		20 MIN	1	C3/F8	A301D	
	A301E	2'-0" x 6'-8"	B	WD.	1-3/4"	TRANS.	EXIST.	EXIST.	EXIST.	A		20 MIN	2	C10		9 1/2"
	A301F	2'-0" x 6'-8"	B	WD.	1-3/4"	TRANS.	EXIST.	EXIST.	EXIST.	A		20 MIN	2	C10		9 1/2"
	A302A	2'-0" x 6'-8"	B	WD.	1-3/4"	TRANS.	EXIST.	EXIST.	EXIST.	A		20 MIN	3	C7	A302A	9 1/2"
	A302B	2'-0" x 6'-8"	B	WD.	1-3/4"	TRANS.	EXIST.	EXIST.	EXIST.	A		20 MIN	3	C7	A302B	9 1/2"
	A302C	EXISTING TO REMAIN	EXIST.	EXIST.	EXIST.	EXIST.	EXIST.	EXIST.	EXIST.	EXIST.		EXIST.	EXIST.	H3/F8/C9		DOORS TO STAIRS PREVIOUSLY REPLACED
	A302D	EXISTING TO REMAIN	EXIST.	EXIST.	EXIST.	EXIST.	EXIST.	EXIST.	EXIST.	EXIST.		EXIST.	EXIST.	H3/F8/C9		DOORS TO STAIRS PREVIOUSLY REPLACED
	B300A	2'-4" x 7'-5 1/2"	A	WD.	1-3/4"	TRANS.	EXIST.	EXIST.	EXIST.	A		20 MIN	1	C3/F8	B300A	
	B300B	2'-4" x 7'-5 1/2"	A	WD.	1-3/4"	TRANS.	EXIST.	EXIST.	EXIST.	A		20 MIN	1	C3/F8	B300B	
	B300C	2'-4" x 7'-5 1/2"	A	WD.	1-3/4"	TRANS.	EXIST.	EXIST.	EXIST.	A		20 MIN	1	C3/F8	B300C	
	B300D	2'-4" x 7'-5 1/2"	A	WD.	1-3/4"	TRANS.	EXIST.	EXIST.	EXIST.	A		20 MIN	1	C3/F8	B300D	
	B300E	2'-0" x 6'-8"	B	WD.	1-3/4"	TRANS.	EXIST.	EXIST.	EXIST.	A		20 MIN	2	C10		9 1/2"
	B300F	2'-0" x 6'-8"	B	WD.	1-3/4"	TRANS.	EXIST.	EXIST.	EXIST.	A		20 MIN	2	C10		9 1/2"
	B301A	2'-4" x 7'-5 1/2"	A	WD.	1-3/4"	TRANS.	EXIST.	EXIST.	EXIST.	A		20 MIN	1	C3/F8	B301A	
	B301B	2'-4" x 7'-5 1/2"	A	WD.	1-3/4"	TRANS.	EXIST.	EXIST.	EXIST.	A		20 MIN	1	C3/F8	B301B	
	B301C	2'-4" x 7'-5 1/2"	A	WD.	1-3/4"	TRANS.	EXIST.	EXIST.	EXIST.	A		20 MIN	1	C3/F8	B301C	
	B301D	2'-4" x 7'-5 1/2"	A	WD.	1-3/4"	TRANS.	EXIST.	EXIST.	EXIST.	A		20 MIN	1	C3/F8	B301D	
	B301E	2'-0" x 6'-8"	B	WD.	1-3/4"	TRANS.	EXIST.	EXIST.	EXIST.	A		20 MIN	2	C10		9 1/2"
	B300F	2'-0" x 6'-8"	B	WD.	1-3/4"	TRANS.	EXIST.	EXIST.	EXIST.	A		20 MIN	2	C10		9 1/2"
	B302A	2'-0" x 6'-8"	B	WD.	1-3/4"	TRANS.	EXIST.	EXIST.	EXIST.	A		20 MIN	3	C7	B302A	9 1/2"
	B302B	2'-0" x 6'-8"	B	WD.	1-3/4"	TRANS.	EXIST.	EXIST.	EXIST.	A		20 MIN	3	C7	B302B	9 1/2"
	B302C	EXISTING TO REMAIN	EXIST.	EXIST.	EXIST.	EXIST.	EXIST.	EXIST.	EXIST.	EXIST.		EXIST.	EXIST.	H3/F8/C9		DOORS TO STAIRS PREVIOUSLY REPLACED
	B302D	EXISTING TO REMAIN	EXIST.	EXIST.	EXIST.	EXIST.	EXIST.	EXIST.	EXIST.	EXIST.		EXIST.	EXIST.	H3/F8/C9		DOORS TO STAIRS PREVIOUSLY REPLACED
	C300A	2'-4" x 7'-5 1/2"	A	WD.	1-3/4"	TRANS.	EXIST.	EXIST.	EXIST.	A		20 MIN	1	C3/F8	C300A	
	C300B	2'-4" x 7'-5 1/2"	A	WD.	1-3/4"	TRANS.	EXIST.	EXIST.	EXIST.	A		20 MIN	1	C3/F8	C300B	
	C300C	2'-4" x 7'-5 1/2"	A	WD.	1-3/4"	TRANS.	EXIST.	EXIST.	EXIST.	A		20 MIN	1	C3/F8	C300C	
	C300D	2'-4" x 7'-5 1/2"	A	WD.	1-3/4"	TRANS.	EXIST.	EXIST.	EXIST.	A		20 MIN	1	C3/F8	C300D	
	C300E	2'-0" x 6'-8"	B	WD.	1-3/4"	TRANS.	EXIST.	EXIST.	EXIST.	A		20 MIN	2	C10		9 1/2"
	C300F	2'-0" x 6'-8"	B	WD.	1-3/4"	TRANS.	EXIST.	EXIST.	EXIST.	A		20 MIN	2	C10		9 1/2"
	C301A	2'-4" x 7'-5 1/2"	A	WD.	1-3/4"	TRANS.	EXIST.	EXIST.	EXIST.	A		20 MIN	1	C3/F8	C301A	
	C301B	2'-4" x 7'-5 1/2"	A	WD.	1-3/4"	TRANS.	EXIST.	EXIST.	EXIST.	A		20 MIN	1	C3/F8	C301B	
	C301C	2'-4" x 7'-5 1/2"	A	WD.	1-3/4"	TRANS.	EXIST.	EXIST.	EXIST.	A		20 MIN	1	C3/F8	C301C	
	C301D	2'-4" x 7'-5 1/2"	A	WD.	1-3/4"	TRANS.	EXIST.	EXIST.	EXIST.	A		20 MIN	1	C3/F8	C301D	
	C301E	2'-0" x 6'-8"	B	WD.	1-3/4"	TRANS.	EXIST.	EXIST.	EXIST.	A		20 MIN	2	C10		9 1/2"
	C301F	2'-0" x 6'-8"	B	WD.	1-3/4"	TRANS.	EXIST.	EXIST.	EXIST.	A		20 MIN	2	C10		9 1/2"
	C302A	2'-0" x 6'-8"	B	WD.	1-3/4"	TRANS.	EXIST.	EXIST.	EXIST.	A		20 MIN	3	C7	C302A	9 1/2"
	C302B	2'-0" x 6'-8"	B	WD.	1-3/4"	TRANS.	EXIST.	EXIST.	EXIST.	A		20 MIN	3	C7	C302B	9 1/2"
	C302C	EXISTING TO REMAIN	EXIST.	EXIST.	EXIST.	EXIST.	EXIST.	EXIST.	EXIST.	EXIST.		EXIST.	EXIST.	H3/F8/C9		DOORS TO STAIRS PREVIOUSLY REPLACED
	C302D	EXISTING TO REMAIN	EXIST.	EXIST.	EXIST.	EXIST.	EXIST.	EXIST.	EXIST.	EXIST.		EXIST.	EXIST.	H3/F8/C9		DOORS TO STAIRS PREVIOUSLY REPLACED
	D300A	2'-4" x 7'-5 1/2"	A	WD.	1-3/4"	TRANS.	EXIST.	EXIST.	EXIST.	A		20 MIN	1	C3/F8	D300A	
	D300B	2'-4" x 7'-5 1/2"	A	WD.	1-3/4"	TRANS.	EXIST.	EXIST.	EXIST.	A		20 MIN	1	C3/F8	D300B	
	D300C	2'-4" x 7'-5 1/2"	A	WD.	1-3/4"	TRANS.	EXIST.	EXIST.	EXIST.	A		20 MIN	1	C3/F8	D300C	
	D300D	2'-4" x 7'-5 1/2"	A	WD.	1-3/4"	TRANS.	EXIST.	EXIST.	EXIST.	A		20 MIN	1	C3/F8	D300D	
	D300E	2'-0" x 6'-8"	B	WD.	1-3/4"	TRANS.	EXIST.	EXIST.	EXIST.	A		20 MIN	2	C10		9 1/2"
	D300F	2'-0" x 6'-8"	B	WD.	1-3/4"	TRANS.	EXIST.	EXIST.	EXIST.	A		20 MIN	2	C10		9 1/2"
	D301A	2'-4" x 7'-5 1/2"	A	WD.	1-3/4"	TRANS.	EXIST.	EXIST.	EXIST.	A		20 MIN	1	C3/F8	D301A	
	D301B	2'-4" x 7'-5 1/2"	A	WD.	1-3/4"	TRANS.	EXIST.	EXIST.	EXIST.	A		20 MIN	1	C3/F8	D301B	
	D301C	2'-4" x 7'-5 1/2"	A	WD.	1-3/4"	TRANS.	EXIST.	EXIST.	EXIST.	A		20 MIN	1	C3/F8	D301C	
	D301D	2'-4" x 7'-5 1/2"	A	WD.	1-3/4"	TRANS.	EXIST.	EXIST.	EXIST.	A		20 MIN	1	C3/F8	D301D	
	D301E	2'-0" x 6'-8"	B	WD.	1-3/4"	TRANS.	EXIST.	EXIST.	EXIST.	A		20 MIN	2	C10		9 1/2"
	D300F	2'-0" x 6'-8"	B	WD.	1-3/4"	TRANS.	EXIST.	EXIST.	EXIST.	A		20 MIN	2	C10		9 1/2"
	D300G	2'-0" x 6'-8"	B	WD.	1-3/4"	TRANS.	EXIST.	EXIST.	EXIST.	A		20 MIN	2			9 1/2"
	D302A	2'-0" x 6'-8"	B	WD.	1-3/4"	TRANS.	EXIST.	EXIST.	EXIST.	A		20 MIN	3	C7	D302A	9 1/2"
	D302B	2'-0" x 6'-8"	B	WD.	1-3/4"	TRANS.	EXIST.	EXIST.	EXIST.	A		20 MIN	3	C7	D302B	9 1/2"
	D302C	EXISTING TO REMAIN	EXIST.	EXIST.	EXIST.	EXIST.	EXIST.	EXIST.	EXIST.	EXIST.		EXIST.	EXIST.	H3/F8/C9		DOORS TO STAIRS PREVIOUSLY REPLACED
	D302D	EXISTING TO REMAIN	EXIST.	EXIST.	EXIST.	EXIST.	EXIST.	EXIST.	EXIST.	EXIST.		EXIST.	EXIST.	H3/F8/C9		DOORS TO STAIRS PREVIOUSLY REPLACED
	E300A	2'-4" x 7'-5 1/2"	A	WD.	1-3/4"	TRANS.	EXIST.	EXIST.	EXIST.	A		20 MIN	1	C3/F8	E300A	
	E300B	2'-4" x 7'-5 1/2"	A	WD.	1-3/4"	TRANS.	EXIST.	EXIST.	EXIST.	A		20 MIN	1	C3/F8	E300B	
	E300C	2'-4" x 7'-5 1/2"	A	WD.	1-3/4"	TRANS.	EXIST.	EXIST.	EXIST.	A		20 MIN	1	C3/F8	E300C	
	E300D	2'-4" x 7'-5 1/2"	A	WD.	1-3/4"	TRANS.	EXIST.	EXIST.	EXIST.	A		20 MIN	1	C3/F8	E300D	
	E300E	2'-4" x 7'-5 1/2"	A	WD.	1-3/4"	TRANS.	EXIST.	EXIST.	EXIST.	A		20 MIN	1	C3/F8	E300E	
	E300F	2'-0" x 6'-8"	B	WD.	1-3/4"	TRANS.	EXIST.	EXIST.	EXIST.	A		20 MIN	2	C10		9 1/2"
	E300G	2'-0" x 6'-8"	B	WD.	1-3/4"	TRANS.	EXIST.	EXIST.	EXIST.	A		20 MIN	2	C10		9 1/2"
	E301A	2'-4" x 7'-5 1/2"	A	WD.	1-3/4"	TRANS.	EXIST.	EXIST.	EXIST.	A		20 MIN	1	C3/F8	E301A	
	E301B	2'-4" x 7'-5 1/2"	A	WD.	1-3/4"	TRANS.	EXIST.	EXIST.	EXIST.	A		20 MIN	1	C3/F8	E301B	
	E301C	2'-4" x 7'-5 1/2"	A	WD.	1-3/4"	TRANS.	EXIST.	EXIST.	EXIST.	A		20 MIN	1	C3/F8	E301C	
	E301D	2'-4" x 7'-5 1/2"	A	WD.	1-3/4"	TRANS.	EXIST.	EXIST.	EXIST.	A		20 MIN	1	C3/F8	E301D	
	E300E	2'-0" x 6'-8"	B	WD.	1-3/4"	TRANS.	EXIST.	EXIST.	EXIST.	A		20 MIN	2	C10		9 1/2"
	E300F	2'-0" x 6'-8"	B	WD.	1-3/4"	TRANS.	EXIST.	EXIST.	EXIST.	A		20 MIN	2	C10		9 1/2"
	E302A	2'-0" x 6'-8"	B	WD.	1-3/4"	TRANS.	EXIST.	EXIST.	EXIST.	A		20 MIN	3	C7	E302A	9 1/2"
	E302B	2'-0" x 6'-8"	B	WD.	1-3/4"	TRANS.	EXIST.	EXIST.	EXIST.	A		20 MIN	3	C7	E302B	9 1/2"
	E302C	EXISTING TO REMAIN	EXIST.	EXIST.	EXIST.	EXIST.	EXIST.	EXIST.	EXIST.	EXIST.		EXIST.	EXIST.	H3/F8/C9		DOORS TO STAIRS PREVIOUSLY REPLACED
	E302D	EXISTING TO REMAIN	EXIST.	EXIST.	EXIST.	EXIST.	EXIST.	EXIST.	EXIST.	EXIST.		EXIST.	EXIST.	H3/F8/C9		DOORS TO STAIRS PREVIOUSLY REPLACED

NOTE: ALL GREY BOXES SHALL INDICATE A DOOR THAT IS ASSOCIATED WITH ALTERNATE #2

TectonArchitects | inc

1 Hartford Sq. West, Hartford CT 06106
860 548 0802

17 Railroad Avenue, Westerly RI 02891
401 596 7555

tectonarchitects.com

Notice:
This drawing is the property of Tecton Architects | inc The use, re-use or reproduction of this drawing for any purpose whatsoever without an expressed written agreement between Tecton Architects | inc and the user is prohibited. Rights to use the information on this sheet are not transferred until payment has been received for services rendered. Any rights so granted are non-transferable to other parties without the prior expressed written consent of Tecton Architects | inc

© 2012 Tecton Architects | inc

Consultant

Owner

THE UNIVERSITY OF RHODE ISLAND

THINK BIG WE DO

Project

University of Rhode Island
BURNSIDE HALL
BATHROOM RENOVATIONS & DOOR & SIGNAGE REPLACEMENT

KINGSTON, RI

Key Plan

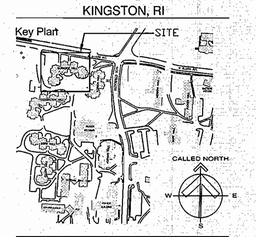

Seals

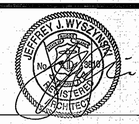

Issues

Date	Description
12/20/2012	FOR CONSTRUCTION

Revisions

No.	Date	Description
1	12/05/2012	REVIEW

Drawing Title

SIGN & DOOR SCHEDULE & DETAILS

Issue Date: 12/20/2012

Project No:	KC.R.BOGW.2010.001	Scale:	AS NOTED
Project Manager:	MT	Production Leader:	MS
Project Architect:	MT	Peer Reviewer:	JM

Drawing Number

A8.103

THIRD FLOOR DOOR, FRAME & SIGNAGE SCHEDULE

NOTE: PRIOR TO ORDERING OF ANY UNITS ALL DIMENSIONS SHALL BE FIELD VERIFIED

ALTERNATE	NUMBER	SIZE	DOOR				FRAME				TRANSOM	DOOR RATING	HDWR.	SIGN		TRANSOM HT. (TOP OF DOOR TO TOP OF FRAME) REMARKS
			ELEV.	MTL.	THK.	FINISH	MT.	THK.	FINISH	ELEV.				TYPE	RM#	
	A300A	2'-4" x 7'-5 1/2"	A	WD.	1-3/4"	TRANS.	EXIST.	EXIST.	EXIST.	A		20 MIN	1	C3/F8	A300A	
	A300B	2'-4" x 7'-5 1/2"	A	WD.	1-3/4"	TRANS.	EXIST.	EXIST.	EXIST.	A		20 MIN	1	C3/F8	A300B	
	A300C	2'-4" x 7'-5 1/2"	A	WD.	1-3/4"	TRANS.	EXIST.	EXIST.	EXIST.	A		20 MIN	1	C3/F8	A300C	
	A300D	2'-4" x 7'-5 1/2"	A	WD.	1-3/4"	TRANS.	EXIST.	EXIST.	EXIST.	A		20 MIN	1	C3/F8	A300D	
	A300E	2'-0" x 6'-8"	B	WD.	1-3/4"	TRANS.	EXIST.	EXIST.	EXIST.	A		20 MIN	2	C10		9 1/2"
	A300F	2'-0" x 6'-8"	B	WD.	1-3/4"	TRANS.	EXIST.	EXIST.	EXIST.	A		20 MIN	2	C10		9 1/2"
	A301A	2'-4" x 7'-5 1/2"	A	WD.	1-3/4"	TRANS.	EXIST.	EXIST.	EXIST.	A		20 MIN	1	C3/F8	A301A	
	A301B	2'-4" x 7'-5 1/2"	A	WD.	1-3/4"	TRANS.	EXIST.	EXIST.	EXIST.	A		20 MIN	1	C3/F8	A301B	
	A301C	2'-4" x 7'-5 1/2"	A	WD.	1-3/4"	TRANS.	EXIST.	EXIST.	EXIST.	A		20 MIN	1	C3/F8	A301C	
	A301D	2'-4" x 7'-5 1/2"	A	WD.	1-3/4"	TRANS.	EXIST.	EXIST.	EXIST.	A		20 MIN	1	C3/F8	A301D	
	A301E	2'-0" x 6'-8"	B	WD.	1-3/4"	TRANS.	EXIST.	EXIST.	EXIST.	A		20 MIN	2	C10		9 1/2"
	A301F	2'-0" x 6'-8"	B	WD.	1-3/4"	TRANS.	EXIST.	EXIST.	EXIST.	A		20 MIN	2	C10		9 1/2"
	A302A	2'-0" x 6'-8"	B	WD.	1-3/4"	TRANS.	EXIST.	EXIST.	EXIST.	A		20 MIN	3	C7	A302A	9 1/2"
	A302B	2'-0" x 6'-8"	B	WD.	1-3/4"	TRANS.	EXIST.	EXIST.	EXIST.	A		20 MIN	3	C7	A302B	9 1/2"
	A302C	EXISTING TO REMAIN	EXIST.	EXIST.	EXIST.	EXIST.	EXIST.	EXIST.	EXIST.	EXIST.		EXIST.	EXIST.	H3/F8/C9		DOORS TO STAIRS PREVIOUSLY REPLACED
	A302D	EXISTING TO REMAIN	EXIST.	EXIST.	EXIST.	EXIST.	EXIST.	EXIST.	EXIST.	EXIST.		EXIST.	EXIST.	H3/F8/C9		DOORS TO STAIRS PREVIOUSLY REPLACED
	B300A	2'-4" x 7'-5 1/2"	A	WD.	1-3/4"	TRANS.	EXIST.	EXIST.	EXIST.	A		20 MIN	1	C3/F8	B300A	
	B300B	2'-4" x 7'-5 1/2"	A	WD.	1-3/4"	TRANS.	EXIST.	EXIST.	EXIST.	A		20 MIN	1	C3/F8	B300B	
	B300C	2'-4" x 7'-5 1/2"	A	WD.	1-3/4"	TRANS.	EXIST.	EXIST.	EXIST.	A		20 MIN	1	C3/F8	B300C	
	B300D	2'-4" x 7'-5 1/2"	A	WD.	1-3/4"	TRANS.	EXIST.	EXIST.	EXIST.	A		20 MIN	1	C3/F8	B300D	
	B300E	2'-0" x 6'-8"	B	WD.	1-3/4"	TRANS.	EXIST.	EXIST.	EXIST.	A		20 MIN	2	C10		9 1/2"
	B300F	2'-0" x 6'-8"	B	WD.	1-3/4"	TRANS.	EXIST.	EXIST.	EXIST.	A		20 MIN	2	C10		9 1/2"
	B301A	2'-4" x 7'-5 1/2"	A	WD.	1-3/4"	TRANS.	EXIST.	EXIST.	EXIST.	A		20 MIN	1	C3/F8	B301A	
	B301B	2'-4" x 7'-5 1/2"	A	WD.	1-3/4"	TRANS.	EXIST.	EXIST.	EXIST.	A		20 MIN	1	C3/F8	B301B	
	B301C	2'-4" x 7'-5 1/2"	A	WD.	1-3/4"	TRANS.	EXIST.	EXIST.	EXIST.	A		20 MIN	1	C3/F8	B301C	
	B301D	2'-4" x 7'-5 1/2"	A	WD.	1-3/4"	TRANS.	EXIST.	EXIST.	EXIST.	A		20 MIN	1	C3/F8	B301D	
	B301E	2'-0" x 6'-8"	B	WD.	1-3/4"	TRANS.	EXIST.	EXIST.	EXIST.	A		20 MIN	2	C10		9 1/2"
	B300F	2'-0" x 6'-8"	B	WD.	1-3/4"	TRANS.	EXIST.	EXIST.	EXIST.	A		20 MIN	2	C10		9 1/2"
	B302A	2'-0" x 6'-8"	B	WD.	1-3/4"	TRANS.	EXIST.	EXIST.	EXIST.	A		20 MIN	3	C7	B302A	9 1/2"
	B302B	2'-0" x 6'-8"	B	WD.	1-3/4"	TRANS.	EXIST.	EXIST.	EXIST.	A		20 MIN	3	C7	B302B	9 1/2"
	B302C	EXISTING TO REMAIN	EXIST.	EXIST.	EXIST.	EXIST.	EXIST.	EXIST.	EXIST.	EXIST.		EXIST.	EXIST.	H3/F8/C9		DOORS TO STAIRS PREVIOUSLY REPLACED
	B302D	EXISTING TO REMAIN	EXIST.	EXIST.	EXIST.	EXIST.	EXIST.	EXIST.	EXIST.	EXIST.		EXIST.	EXIST.	H3/F8/C9		DOORS TO STAIRS PREVIOUSLY REPLACED
	C300A	2'-4" x 7'-5 1/2"	A	WD.	1-3/4"	TRANS.	EXIST.	EXIST.	EXIST.	A		20 MIN	1	C3/F8	C300A	
	C300B	2'-4" x 7'-5 1/2"	A	WD.	1-3/4"	TRANS.	EXIST.	EXIST.	EXIST.	A		20 MIN	1	C3/F8	C300B	
	C300C	2'-4" x 7'-5 1/2"	A	WD.	1-3/4"	TRANS.	EXIST.	EXIST.	EXIST.	A		20 MIN	1	C3/F8	C300C	
	C300D	2'-4" x 7'-5 1/2"	A	WD.	1-3/4"	TRANS.	EXIST.	EXIST.	EXIST.	A		20 MIN	1	C3/F8	C300D	
	C300E	2'-0" x 6'-8"	B	WD.	1-3/4"	TRANS.	EXIST.	EXIST.	EXIST.	A		20 MIN	2	C10		9 1/2"
	C300F	2'-0" x 6'-8"	B	WD.	1-3/4"	TRANS.	EXIST.	EXIST.	EXIST.	A		20 MIN	2	C10		9 1/2"
	C301A	2'-4" x 7'-5 1/2"	A	WD.	1-3/4"	TRANS.	EXIST.	EXIST.	EXIST.	A		20 MIN	1	C3/F8	C301A	
	C301B	2'-4" x 7'-5 1/2"	A	WD.	1-3/4"	TRANS.	EXIST.	EXIST.	EXIST.	A		20 MIN	1	C3/F8	C301B	
	C301C	2'-4" x 7'-5 1/2"	A	WD.	1-3/4"	TRANS.	EXIST.	EXIST.	EXIST.	A		20 MIN	1	C3/F8	C301C	
	C301D	2'-4" x 7'-5 1/2"	A	WD.	1-3/4"	TRANS.	EXIST.	EXIST.	EXIST.	A		20 MIN	1	C3/F8	C301D	
	C301E	2'-0" x 6'-8"	B	WD.	1-3/4"	TRANS.	EXIST.	EXIST.	EXIST.	A		20 MIN	2	C10		9 1/2"
	C301F	2'-0" x 6'-8"	B	WD.	1-3/4"	TRANS.	EXIST.	EXIST.	EXIST.	A		20 MIN	2	C10		9 1/2"
	C302A	2'-0" x 6'-8"	B	WD.	1-3/4"	TRANS.	EXIST.	EXIST.	EXIST.	A		20 MIN	3	C7	C302A	9 1/2"
	C302B	2'-0" x 6'-8"	B	WD.	1-3/4"	TRANS.	EXIST.	EXIST.	EXIST.	A		20 MIN	3	C7	C302B	9 1/2"
	C302C	EXISTING TO REMAIN	EXIST.	EXIST.	EXIST.	EXIST.	EXIST.	EXIST.	EXIST.	EXIST.		EXIST.	EXIST.	H3/F8/C9		DOORS TO STAIRS PREVIOUSLY REPLACED
	C302D	EXISTING TO REMAIN	EXIST.	EXIST.	EXIST.	EXIST.	EXIST.	EXIST.	EXIST.	EXIST.		EXIST.	EXIST.	H3/F8/C9		DOORS TO STAIRS PREVIOUSLY REPLACED
	D300A	2'-4" x 7'-5 1/2"	A	WD.	1-3/4"	TRANS.	EXIST.	EXIST.	EXIST.	A		20 MIN	1	C3/F8	D300A	
	D300B	2'-4" x 7'-5 1/2"	A	WD.	1-3/4"	TRANS.	EXIST.	EXIST.	EXIST.	A		20 MIN	1	C3/F8	D300B	
	D300C	2'-4" x 7'-5 1/2"	A	WD.	1-3/4"	TRANS.	EXIST.	EXIST.	EXIST.	A		20 MIN	1	C3/F8	D300C	
	D300D	2'-4" x 7'-5 1/2"	A	WD.	1-3/4"	TRANS.	EXIST.	EXIST.	EXIST.	A		20 MIN	1	C3/F8	D300D	
	D300E	2'-0" x 6'-8"	B	WD.	1-3/4"	TRANS.	EXIST.	EXIST.	EXIST.	A		20 MIN	2	C10		9 1/2"
	D300F	2'-0" x 6'-8"	B	WD.	1-3/4"	TRANS.	EXIST.	EXIST.	EXIST.	A		20 MIN	2	C10		9 1/2"
	D301A	2'-4" x 7'-5 1/2"	A	WD.	1-3/4"	TRANS.	EXIST.	EXIST.	EXIST.	A		20 MIN	1	C3/F8	D301A	
	D301B	2'-4" x 7'-5 1/2"	A	WD.	1-3/4"	TRANS.	EXIST.	EXIST.	EXIST.	A		20 MIN	1	C3/F8	D301B	
	D301C	2'-4" x 7'-5 1/2"	A	WD.	1-3/4"	TRANS.	EXIST.	EXIST.	EXIST.	A		20 MIN	1	C3/F8	D301C	
	D301D	2'-4" x 7'-5 1/2"	A	WD.	1-3/4"	TRANS.	EXIST.	EXIST.	EXIST.	A		20 MIN	1	C3/F8	D301D	
	D301E	2'-0" x 6'-8"	B	WD.	1-3/4"	TRANS.	EXIST.	EXIST.	EXIST.	A		20 MIN	2	C10		9 1/2"
	D300F	2'-0" x 6'-8"	B	WD.	1-3/4"	TRANS.	EXIST.	EXIST.	EXIST.	A		20 MIN	2	C10		9 1/2"
	D300G	2'-0" x 6'-8"	B	WD.	1-3/4"	TRANS.	EXIST.	EXIST.	EXIST.	A		20 MIN	2			9 1/2"
	D302A	2'-0" x 6'-8"	B	WD.	1-3/4"	TRANS.	EXIST.	EXIST.	EXIST.	A		20 MIN	3	C7	D302A	9 1/2"
	D302B	2'-0" x 6'-8"	B	WD.	1-3/4"	TRANS.	EXIST.	EXIST.	EXIST.	A		20 MIN	3	C7	D302B	9 1/2"
	D302C	EXISTING TO REMAIN	EXIST.	EXIST.	EXIST.	EXIST.	EXIST.	EXIST.	EXIST.	EXIST.		EXIST.	EXIST.	H3/F8/C9		DOORS TO STAIRS PREVIOUSLY REPLACED
	D302D	EXISTING TO REMAIN	EXIST.	EXIST.	EXIST.	EXIST.	EXIST.	EXIST.	EXIST.	EXIST.		EXIST.	EXIST.	H3/F8/C9		DOORS TO STAIRS PREVIOUSLY REPLACED
	E300A	2'-4" x 7'-5 1/2"	A	WD.	1-3/4"	TRANS.	EXIST.	EXIST.	EXIST.	A		20 MIN	1	C3/F8	E300A	
	E300B	2'-4" x 7'-5 1/2"	A	WD.	1-3/4"	TRANS.	EXIST.	EXIST.	EXIST.	A		20 MIN	1	C3/F8	E300B	
	E300C	2'-4" x 7'-5 1/2"	A	WD.	1-3/4"	TRANS.	EXIST.	EXIST.	EXIST.	A		20 MIN	1	C3/F8	E300C	
	E300D	2'-4" x 7'-5 1/2"	A	WD.	1-3/4"	TRANS.	EXIST.	EXIST.	EXIST.	A		20 MIN	1	C3/F8	E300D	
	E300E	2'-4" x 7'-5 1/2"	A	WD.	1-3/4"	TRANS.	EXIST.	EXIST.	EXIST.	A		20 MIN	1	C3/F8	E300E	
	E300F	2'-0" x 6'-8"	B	WD.	1-3/4"	TRANS.	EXIST.	EXIST.	EXIST.	A		20 MIN	2	C10		9 1/2"
	E300G	2'-0" x 6'-8"	B	WD.	1-3/4"	TRANS.	EXIST.	EXIST.	EXIST.	A		20 MIN	2	C10		9 1/2"
	E301A	2'-4" x 7'-5 1/2"	A	WD.	1-3/4"	TRANS.	EXIST.	EXIST.	EXIST.	A		20 MIN	1	C3/F8	E301A	
	E301B	2'-4" x 7'-5 1/2"	A	WD.	1-3/4"	TRANS.	EXIST.	EXIST.	EXIST.	A		20 MIN	1	C3/F8	E301B	
	E301C	2'-4" x 7'-5 1/2"	A	WD.	1-3/4"	TRANS.	EXIST.	EXIST.	EXIST.	A		20 MIN	1	C3/F8	E301C	
	E301D	2'-4" x 7'-5 1/2"	A	WD.	1-3/4"	TRANS.	EXIST.	EXIST.	EXIST.	A		20 MIN	1	C3/F8	E301D	
	E300E	2'-0" x 6'-8"	B	WD.	1-3/4"	TRANS.	EXIST.	EXIST.	EXIST.	A		20 MIN	2	C10		9 1/2"
	E300F	2'-0" x 6'-8"	B	WD.	1-3/4"	TRANS.	EXIST.	EXIST.	EXIST.	A		20 MIN	2	C10		9 1/2"
	E302A	2'-0" x 6'-8"	B	WD.	1-3/4"	TRANS.	EXIST.	EXIST.	EXIST.	A		20 MIN	3	C7	E302A	9 1/2"
	E302B	2'-0" x 6'-8"	B	WD.	1-3/4"	TRANS.	EXIST.	EXIST.	EXIST.	A		20 MIN	3	C7	E302B	9 1/2"
	E302C	EXISTING TO REMAIN	EXIST.	EXIST.	EXIST.	EXIST.	EXIST.	EXIST.	EXIST.	EXIST.		EXIST.	EXIST.	H3/F8/C9		DOORS TO STAIRS PREVIOUSLY REPLACED
	E302D	EXISTING TO REMAIN	EXIST.	EXIST.	EXIST.	EXIST.	EXIST.	EXIST.	EXIST.	EXIST.		EXIST.	EXIST.	H3/F8/C9		DOORS TO STAIRS PREVIOUSLY REPLACED

NOTE: ALL GREY BOXES SHALL INDICATE A DOOR THAT IS ASSOCIATED WITH ALTERNATE #2

TectonArchitects | inc

1 Hartford Sq. West, Hartford CT 06106
860 548 0802

17 Railroad Avenue, Westerly RI 02891
401 596 7555

tectonarchitects.com

Notice:
This drawing is the property of Tecton Architects | inc The use, re-use or reproduction of this drawing for any purpose whatsoever without an expressed written agreement between Tecton Architects | inc and the user is prohibited. Rights to use the information on this sheet are not transferred until payment has been received for services rendered. Any rights so granted are non-transferable to other parties without the prior expressed written consent of Tecton Architects | inc

© 2012 Tecton Architects | inc

Consultant

CREATIVE ENVIRONMENTS CORP. CONSULTING ENGINEERS

Owner

THE UNIVERSITY OF RHODE ISLAND

THINK BIG WE DO

Project

University of Rhode Island
BURNSIDE HALL
BATHROOM RENOVATIONS & DOOR & SIGNAGE REPLACEMENT

KINGSTON, RI

Key Plan

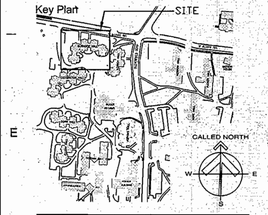

Seals

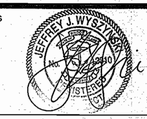

Issues

Date	Description
12/20/2012	FOR CONSTRUCTION

Revisions

No.	Date	Description
1	12/05/2012	REVIEW

Drawing Title

SIGN & DOOR SCHEDULE & DETAILS

Issue Date: 12/20/2012

Project No:	KC.R.BOGW.2010.001	Scale:	AS NOTED
Project Manager:	MT	Production Leader:	MS
Project Architect:	MT	Peer Reviewer:	JM

Drawing Number

A8.104

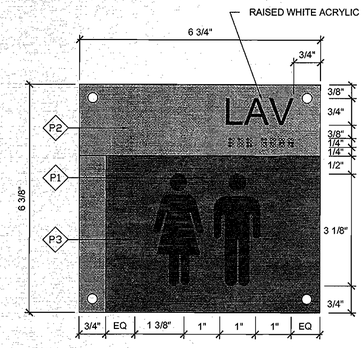

C10 LAVATORY
6"=1'-0"

DEEP ACRYLIC SIGN BACK SPRAYED P2 AND P3 WITH RAISED WHITE ARIAL COPY AND BRAILLE. SYMBOLS WHITE DIRECT PRINT WITH LAMINATE.
TYPICAL MOUNTING

APPLIES TO ALL ROOMS LABELED LAVATORY, TO BE APPLIED TO OUTSIDE OF LAV IN CORRIDOR.

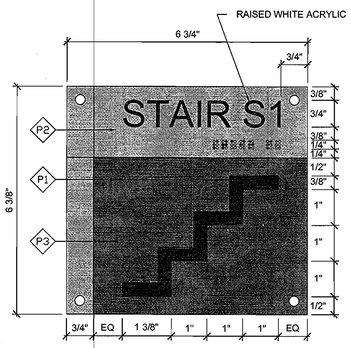

C9 STAIRS
6"=1'-0"

DEEP ACRYLIC SIGN BACK SPRAYED P2 AND P3 WITH RAISED WHITE ARIAL"COPY AND BRAILLE. SYMBOLS WHITE DIRECT PRINT WITH LAMINATE.
TYPICAL MOUNTING

APPLIES TO ALL ROOMS LABELED STAIR, TO BE APPLIED TO OUTSIDE OF STAIR, IN CORRIDOR.

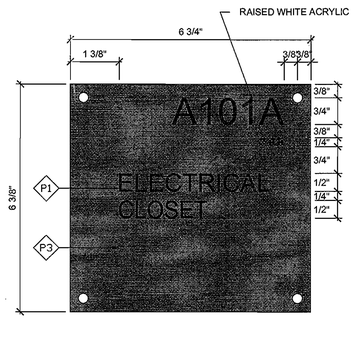

C7 MECHANICAL / ELECTRICAL
6"=1'-0"

DEEP ACRYLIC SIGN BACK SPRAYED P3 WITH RAISED WHITE ARIAL COPY AND BRAILLE. WHITE SECONDARY COPY DIRECT PRINT WITH LAMINATE.
TYPICAL MOUNTING

APPLIES TO ALL ROOMS LABELED MECH, MECHANICAL, STOR/CUST AND FIRE PROTECTION

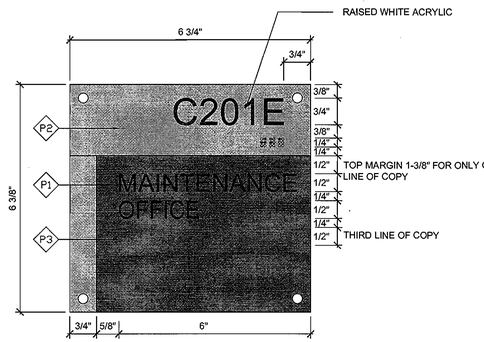

C5 AUXILIARY SPACES / OFFICES
6"=1'-0"

DEEP ACRYLIC SIGN BACK SPRAYED P2 AND P3 WITH RAISED WHITE ARIAL COPY AND BRAILLE. WHITE SECONDARY COPY DIRECT PRINT WITH LAMINATE.
TYPICAL MOUNTING

APPLIES TO ALL ROOMS LABELED OTHER THAN. REQUIRES COORDINATION WITH URI OFFICE OF RESIDENTIAL LIFE.

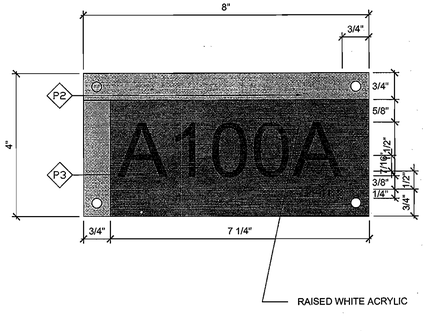

C3 STUDENT ROOMS
6"=1'-0"

NOTE: PROVIDE EACH LOCATION WITH 1A

DEEP ACRYLIC SIGN BACK SPRAYED P2 AND P3 WITH RAISED WHITE ARIAL COPY AND BRAILLE.
TYPICAL MOUNTING

APPLIES TO ALL ROOMS LABELED OFFICE WITH TEMPORARY PERSONNEL. REQUIRES COORDINATION WITH URI OFFICE OF RESIDENTIAL LIFE.

DEMOLITION NOTES:
REMOVE EXISTING SIGNS FASTENERS AND ADHESIVES FROM LOCATIONS WHERE NEW SIGNAGE IS SCHEDULED.

REMOVE DOORS AND ASSOCIATED HARDWARE WHERE INDICATED TO BE NEW, SALVAGE LOCKSETS AND RETURN TO OWNER. EXISTING FRAMES TO REMAIN.

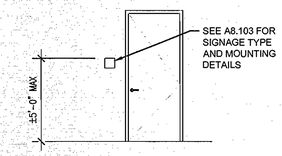

NOTE:
SIGNS MUST BE LOCATED ON THE LOCKSET SIDE OF DOOR, BETWEEN MINIMUM 3" TO MAXIMUM 11" AWAY FROM DOOR FRAME, ALIGNED WITH JOINTS OF INTERIOR WALL FINISH. LOCATIONS WILL VARY DEPENDING ON RELATION OF DOOR TO WALL FINISH.

H10 SIGNAGE MOUNTING LOCATION
N.T.S.

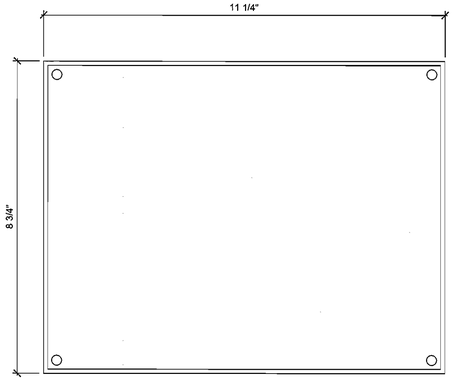

F8 CLEAR ACRYLIC FIRE EVACUATION MAP COVER
6"=1'-0"

CLEAR UNBREAKABLE ACRYLIC WITH SQUARE CORNERS AND BEVELED EDGES. TYPICAL MOUNTING WITHOUT DOUBLE SIDED TAPE.
LAMINATED PLANS PROVIDED BY OWNER

APPLIED TO INTERIOR OF DOOR AT EACH ROOM PER SCHEDULE

ALSO TO BE APPLIED IN CORRIDOR BETWEEN STAIRS

TYPICAL MOUNTING: FOUR COUNTERSUNK HOLES CENTERED AT 3/8" FROM THE CORNERS WITH #6 FLAT TOP TORX SCREWS WITH PIN. PRE-DRILL AND PROVIDE EXPANSION ANCHORS, USE 1/32" BLACK FOAM DOUBLE SIDED TAPE TO ATTACH SIGNAGE TO WALL. INSET TAPE 3/8" FROM EDGES OF PLATE AT FULL PERIMETER OF SIGN.

PAINT & FINISH SCHEDULE

THIS SCHEDULE PROVIDES COLOR MATCHING INFORMATION FOR ALL SIGNS AND GRAPHICS SPECIFIED IN THE SIGN CONSTRUCTION DRAWINGS. PAINT COLORS ARE IDENTIFIED ON THE DRAWINGS WITH DIAMOND TAGS CONTAINING A LETTER AND NUMBER. LISTED BELOW ARE THE TAGS WITH COLOR REFERENCES FOR USE IN MATCHING PAINT. SEE SIGN SPECIFICATIONS FOR PAINT MANUFACTURER AND FINISH INFORMATION.

PROGRAM COLORS & MATERIAL FINISHES

P1 WHITE

P2 MP 15661 (LIGHT GRAY)

P3 MP 18214 (DARK GRAY)

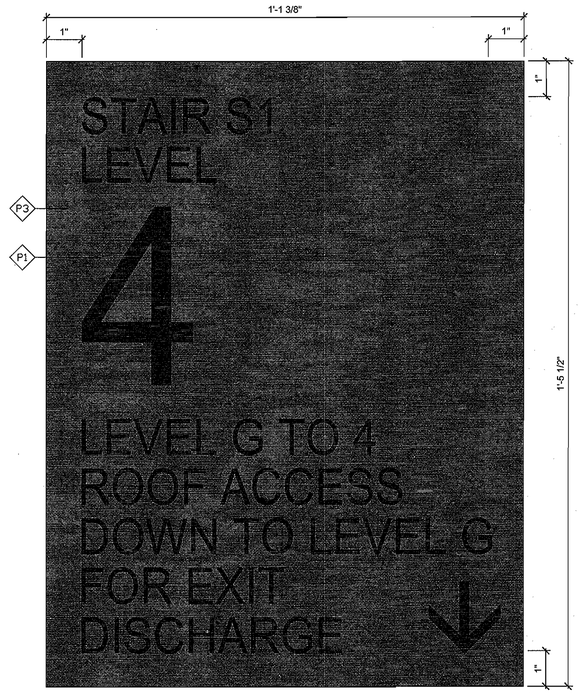

H3 STAIRWELL
6"=1'-0"

APPLIES TO ALL ROOMS LABELED STAIR, TO BE APPLIED INSIDE OF STAIRWELL AT EACH LEVEL. REQUIRES COORDINATION WITH URI OFFICE OF RESIDENTIAL LIFE.

TectonArchitects | inc
1 Hartford Sq. West, Hartford CT 06106
860 548 0802
17 Railroad Avenue, Westerly RI 02891
401 596 7555
tectonarchitects.com

Notice:
This drawing is the property of Tecton Architects | Inc The use, re-use or reproduction of this drawing for any purpose whatsoever without an expressed written agreement between Tecton Architects | Inc and the user is prohibited. Rights to use the information on this sheet are not transferred until payment has been received for services rendered. Any rights so granted are non-transferable to other parties without the prior expressed written consent of Tecton Architects | Inc

© 2012 Tecton Architects | Inc

Consultant

Owner
THE UNIVERSITY OF RHODE ISLAND
THINK BIG WE DO

Project
University of Rhode Island
BURNSIDE HALL
BATHROOM RENOVATIONS & DOOR & SIGNAGE REPLACEMENT
KINGSTON, RI

Key Plan
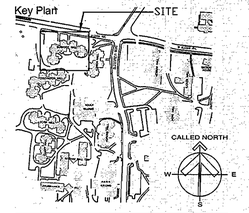

Seals
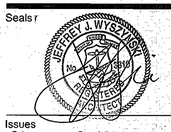

Issues

Date	Description
12/20/2012	FOR CONSTRUCTION

Revisions

No.	Date	Description
1	12/05/2012	REVIEW

Drawing Title

SIGNAGE & MOUNTING DETAILS

Issue Date: 12/20/2012

Project No:	KC.R.ROGW.2010.001	Scale:	AS NOTED
Project Manager:	MT	Production Leader:	MS
Project Architect:	MT	Peer Reviewer:	JM

Drawing Number

A8.105

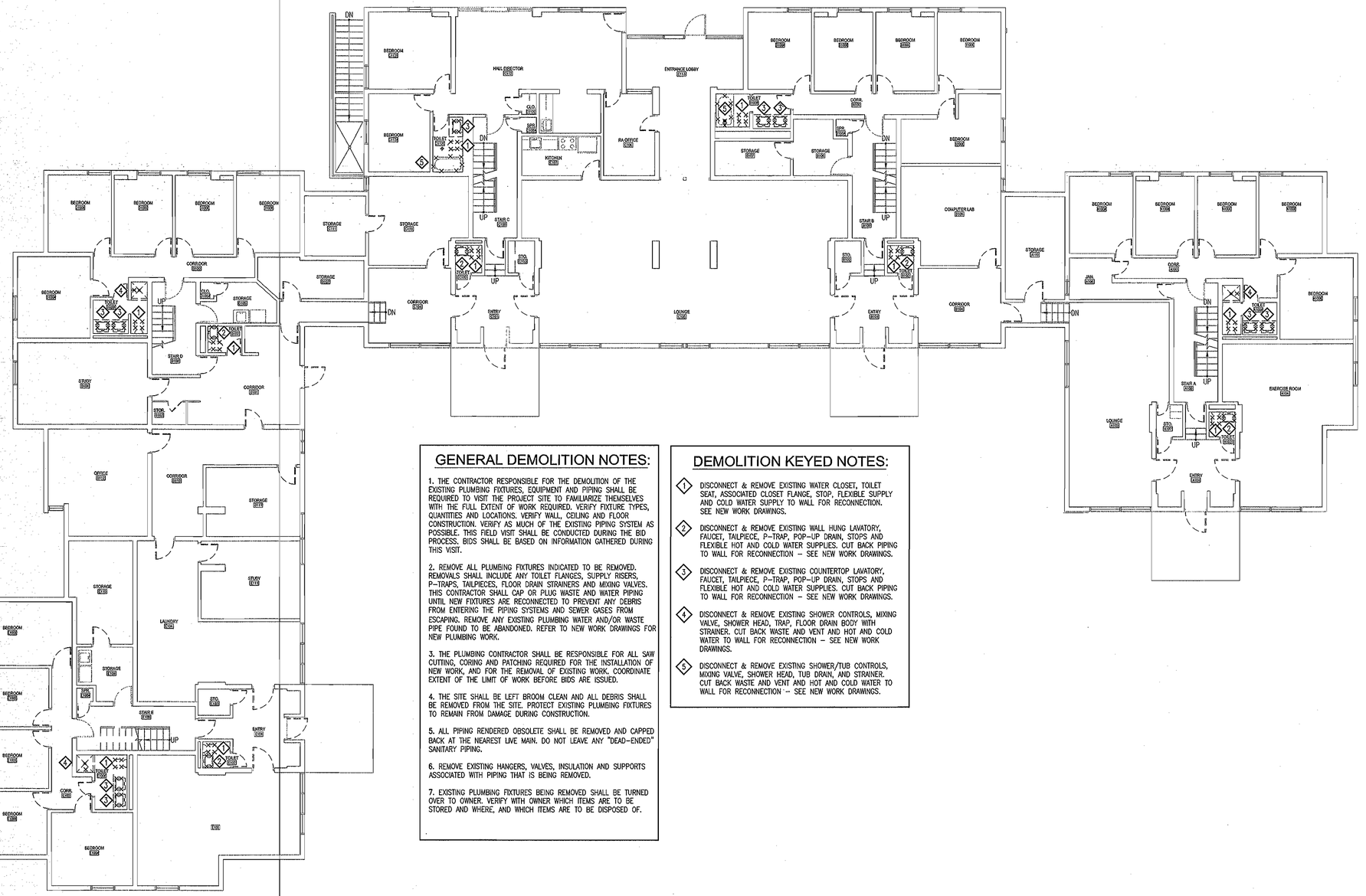

GENERAL DEMOLITION NOTES:

1. THE CONTRACTOR RESPONSIBLE FOR THE DEMOLITION OF THE EXISTING PLUMBING FIXTURES, EQUIPMENT AND PIPING SHALL BE REQUIRED TO VISIT THE PROJECT SITE TO FAMILIARIZE THEMSELVES WITH THE FULL EXTENT OF WORK REQUIRED. VERIFY FIXTURE TYPES, QUANTITIES AND LOCATIONS. VERIFY WALL, CEILING AND FLOOR CONSTRUCTION. VERIFY AS MUCH OF THE EXISTING PIPING SYSTEM AS POSSIBLE. THIS FIELD VISIT SHALL BE CONDUCTED DURING THE BID PROCESS. BIDS SHALL BE BASED ON INFORMATION GATHERED DURING THIS VISIT.

2. REMOVE ALL PLUMBING FIXTURES INDICATED TO BE REMOVED. REMOVALS SHALL INCLUDE ANY TOILET FLANGES, SUPPLY RISERS, P-TRAPS, TAILPIECES, FLOOR DRAIN STRAINERS AND MIXING VALVES. THIS CONTRACTOR SHALL CAP OR PLUG WASTE AND WATER PIPING UNTIL NEW FIXTURES ARE RECONNECTED TO PREVENT ANY DEBRIS FROM ENTERING THE PIPING SYSTEMS AND SEWER GASES FROM ESCAPING. REMOVE ANY EXISTING PLUMBING WATER AND/OR WASTE PIPE FOUND TO BE ABANDONED. REFER TO NEW WORK DRAWINGS FOR NEW PLUMBING WORK.

3. THE PLUMBING CONTRACTOR SHALL BE RESPONSIBLE FOR ALL SAW CUTTING, CORING AND PATCHING REQUIRED FOR THE INSTALLATION OF NEW WORK, AND FOR THE REMOVAL OF EXISTING WORK. COORDINATE EXTENT OF THE LIMIT OF WORK BEFORE BIDS ARE ISSUED.

4. THE SITE SHALL BE LEFT BROOM CLEAN AND ALL DEBRIS SHALL BE REMOVED FROM THE SITE. PROTECT EXISTING PLUMBING FIXTURES TO REMAIN FROM DAMAGE DURING CONSTRUCTION.

5. ALL PIPING RENDERED OBSOLETE SHALL BE REMOVED AND CAPPED BACK AT THE NEAREST LIVE MAIN. DO NOT LEAVE ANY "DEAD-ENDED" SANITARY PIPING.

6. REMOVE EXISTING HANGERS, VALVES, INSULATION AND SUPPORTS ASSOCIATED WITH PIPING THAT IS BEING REMOVED.

7. EXISTING PLUMBING FIXTURES BEING REMOVED SHALL BE TURNED OVER TO OWNER. VERIFY WITH OWNER WHICH ITEMS ARE TO BE STORED AND WHERE, AND WHICH ITEMS ARE TO BE DISPOSED OF.

DEMOLITION KEYED NOTES:

1. DISCONNECT & REMOVE EXISTING WATER CLOSET, TOILET SEAT, ASSOCIATED CLOSET FLANGE, STOP, FLEXIBLE SUPPLY AND COLD WATER SUPPLY TO WALL FOR RECONNECTION. SEE NEW WORK DRAWINGS.
2. DISCONNECT & REMOVE EXISTING WALL HUNG LAVATORY, FAUCET, TAILPIECE, P-TRAP, POP-UP DRAIN, STOPS AND FLEXIBLE HOT AND COLD WATER SUPPLIES. CUT BACK PIPING TO WALL FOR RECONNECTION – SEE NEW WORK DRAWINGS.
3. DISCONNECT & REMOVE EXISTING COUNTERTOP LAVATORY, FAUCET, TAILPIECE, P-TRAP, POP-UP DRAIN, STOPS AND FLEXIBLE HOT AND COLD WATER SUPPLIES. CUT BACK PIPING TO WALL FOR RECONNECTION – SEE NEW WORK DRAWINGS.
4. DISCONNECT & REMOVE EXISTING SHOWER CONTROLS, MIXING VALVE, SHOWER HEAD, TRAP, FLOOR DRAIN BODY WITH STRAINER. CUT BACK WASTE AND VENT AND HOT AND COLD WATER TO WALL FOR RECONNECTION – SEE NEW WORK DRAWINGS.
5. DISCONNECT & REMOVE EXISTING SHOWER/TUB CONTROLS, MIXING VALVE, SHOWER HEAD, TUB DRAIN, AND STRAINER. CUT BACK WASTE AND VENT AND HOT AND COLD WATER TO WALL FOR RECONNECTION – SEE NEW WORK DRAWINGS.

H1C GROUND LEVEL FLOOR PLAN - PLUMBING DEMOLITION
SCALE: 1/8"=1'-0"

TectonArchitects | inc
1 Hartford Sq. West, Hartford CT 06106
860 548 0802
17 Railroad Avenue, Westerly RI 02891
401 596 7555
tectonarchitects.com

Notice:
This drawing is the property of Tecton Architects | Inc The use, re-use or reproduction of this drawing for any purpose whatsoever without an expressed written agreement between Tecton Architects | Inc and the user is prohibited. Rights to use the information on this sheet are not transferred until payment has been received for services rendered. Any rights so granted are non-transferable to other parties without the prior expressed written consent of Tecton Architects | Inc

© 2012 Tecton Architects | Inc

Consultant

Owner
THE UNIVERSITY OF RHODE ISLAND
THINK BIG WE DO

Project
University of Rhode Island
BURNSIDE HALL
BATHROOM RENOVATIONS & DOOR & SIGNAGE REPLACEMENT
KINGSTON, RI

Key Plan

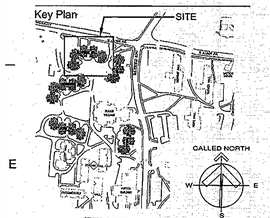

Seals

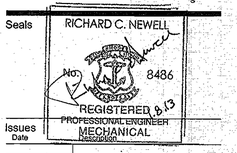

Issues

Date	Description
12/20/2012	CONSTRUCTION DOCUMENTS

Revisions

No.	Date	Description

Drawing Title
GROUND LEVEL FLOOR PLAN PLUMBING DEMOLITON

Issue Date:	12/20/2012
Project No: URIBIN	Scale: AS NOTED
Project Manager: WMS	Production Leader: MS
Project Architect: MT	Peer Reviewer: RCN

Drawing Number
P1.101

CEC# 2012126

DEMOLITION KEYED NOTES:

1. DISCONNECT & REMOVE EXISTING WATER CLOSET, TOILET SEAT, ASSOCIATED CLOSET FLANGE, STOP, FLEXIBLE SUPPLY AND COLD WATER SUPPLY TO WALL FOR RECONNECTION. SEE NEW WORK DRAWINGS.
2. DISCONNECT & REMOVE EXISTING WALL HUNG LAVATORY, FAUCET, TAILPIECE, P-TRAP, POP-UP DRAIN, STOPS AND FLEXIBLE HOT AND COLD WATER SUPPLIES. CUT BACK PIPING TO WALL FOR RECONNECTION – SEE NEW WORK DRAWINGS.
3. DISCONNECT & REMOVE EXISTING COUNTERTOP LAVATORY, FAUCET, TAILPIECE, P-TRAP, POP-UP DRAIN, STOPS AND FLEXIBLE HOT AND COLD WATER SUPPLIES. CUT BACK PIPING TO WALL FOR RECONNECTION – SEE NEW WORK DRAWINGS.
4. DISCONNECT & REMOVE EXISTING SHOWER CONTROLS, MIXING VALVE, SHOWER HEAD, TRAP, FLOOR DRAIN BODY WITH STRAINER. CUT BACK WASTE AND VENT AND HOT AND COLD WATER TO WALL FOR RECONNECTION – SEE NEW WORK DRAWINGS.
5. DISCONNECT & REMOVE EXISTING SHOWER/TUB CONTROLS, MIXING VALVE, SHOWER HEAD, TUB DRAIN, AND STRAINER. CUT BACK WASTE AND VENT AND HOT AND COLD WATER TO WALL FOR RECONNECTION – SEE NEW WORK DRAWINGS.

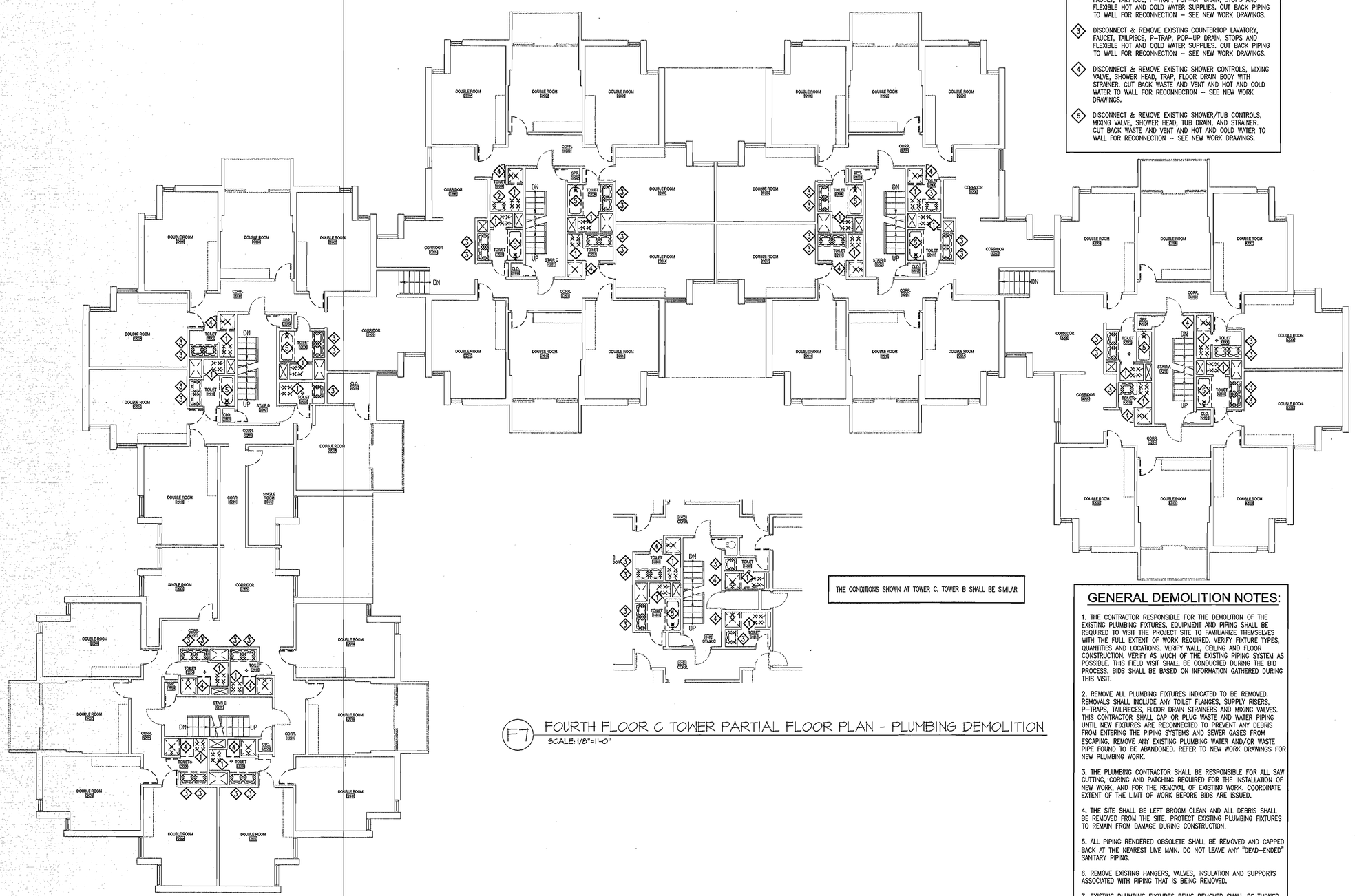

F7 FOURTH FLOOR C TOWER PARTIAL FLOOR PLAN - PLUMBING DEMOLITION
SCALE: 1/8"=1'-0"

THE CONDITIONS SHOWN AT TOWER C. TOWER B SHALL BE SIMILAR

GENERAL DEMOLITION NOTES:

1. THE CONTRACTOR RESPONSIBLE FOR THE DEMOLITION OF THE EXISTING PLUMBING FIXTURES, EQUIPMENT AND PIPING SHALL BE REQUIRED TO VISIT THE PROJECT SITE TO FAMILIARIZE THEMSELVES WITH THE FULL EXTENT OF WORK REQUIRED. VERIFY FIXTURE TYPES, QUANTITIES AND LOCATIONS. VERIFY WALL, CEILING AND FLOOR CONSTRUCTION. VERIFY AS MUCH OF THE EXISTING PIPING SYSTEM AS POSSIBLE. THIS FIELD VISIT SHALL BE CONDUCTED DURING THE BID PROCESS. BIDS SHALL BE BASED ON INFORMATION GATHERED DURING THIS VISIT.
2. REMOVE ALL PLUMBING FIXTURES INDICATED TO BE REMOVED. REMOVALS SHALL INCLUDE ANY TOILET FLANGES, SUPPLY RISERS, P-TRAPS, TAILPIECES, FLOOR DRAIN STRAINERS AND MIXING VALVES. THIS CONTRACTOR SHALL CAP OR PLUG WASTE AND WATER PIPING UNTIL NEW FIXTURES ARE RECONNECTED TO PREVENT ANY DEBRIS FROM ENTERING THE PIPING SYSTEMS AND SEWER GASES FROM ESCAPING. REMOVE ANY EXISTING PLUMBING WATER AND/OR WASTE PIPE FOUND TO BE ABANDONED. REFER TO NEW WORK DRAWINGS FOR NEW PLUMBING WORK.
3. THE PLUMBING CONTRACTOR SHALL BE RESPONSIBLE FOR ALL SAW CUTTING, CORING AND PATCHING REQUIRED FOR THE INSTALLATION OF NEW WORK, AND FOR THE REMOVAL OF EXISTING WORK. COORDINATE EXTENT OF THE LIMIT OF WORK BEFORE BIDS ARE ISSUED.
4. THE SITE SHALL BE LEFT BROOM CLEAN AND ALL DEBRIS SHALL BE REMOVED FROM THE SITE. PROTECT EXISTING PLUMBING FIXTURES TO REMAIN FROM DAMAGE DURING CONSTRUCTION.
5. ALL PIPING RENDERED OBSOLETE SHALL BE REMOVED AND CAPPED BACK AT THE NEAREST LIVE MAIN. DO NOT LEAVE ANY "DEAD-ENDED" SANITARY PIPING.
6. REMOVE EXISTING HANGERS, VALVES, INSULATION AND SUPPORTS ASSOCIATED WITH PIPING THAT IS BEING REMOVED.
7. EXISTING PLUMBING FIXTURES BEING REMOVED SHALL BE TURNED OVER TO OWNER. VERIFY WITH OWNER WHICH ITEMS ARE TO BE STORED AND WHERE, AND WHICH ITEMS ARE TO BE DISPOSED OF.

H1C SECOND THIRD & FOURTH LEVELS FLOOR PLAN - PLUMBING DEMOLITION
SCALE: 1/8"=1'-0"

TectonArchitects | inc
1 Hartford Sq. West, Hartford CT 06106
860 548 0802
17 Railroad Avenue, Westerly RI 02891
401 596 7555
tectonarchitects.com

Notice:
This drawing is the property of Tecton Architects | Inc The use, re-use or reproduction of this drawing for any purpose whatsoever without an expressed written agreement between Tecton Architects | Inc and the user is prohibited. Rights to use the information on this sheet are not transferred until payment has been received for services rendered. Any rights so granted are non-transferable to other parties without the prior expressed written consent of Tecton Architects | Inc

© 2012 Tecton Architects | Inc

Consultant

Owner
THE UNIVERSITY OF RHODE ISLAND
THINK BIG WE DO

Project
University of Rhode Island
BURNSIDE HALL
BATHROOM RENOVATIONS & DOOR & SIGNAGE REPLACEMENT
KINGSTON, RI

Key Plan

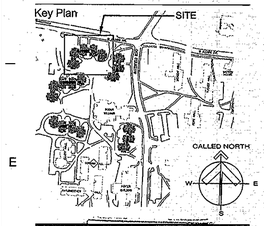

Seals

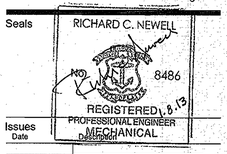

Issues

Date	Description
12/20/2012	CONSTRUCTION DOCUMENTS

Revisions

No.	Date	Description

Drawing Title
SECOND, THIRD, & FOURTH FLOORS PLUMBING DEMOLITION

Issue Date:	12/20/2012
Project No: URI16IN	Scale: AS NOTED
Project Manager: WMS	Production Leader: MS
Project Architect: MT	Peer Reviewer: RCN

Drawing Number
P1.102

CEC# 2012126

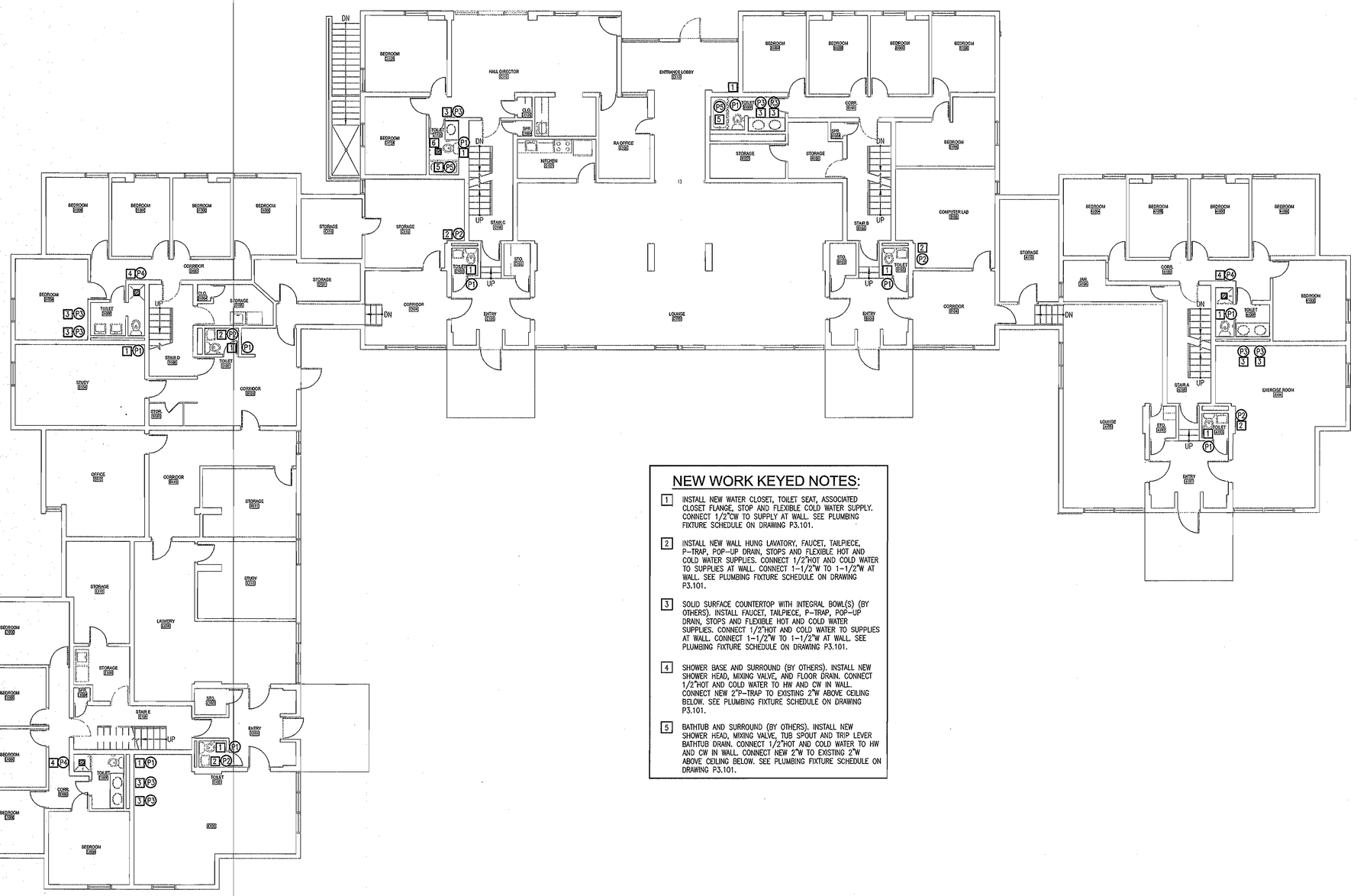

NEW WORK KEYED NOTES:

1. INSTALL NEW WATER CLOSET, TOILET SEAT, ASSOCIATED CLOSET FLANGE, STOP AND FLEXIBLE COLD WATER SUPPLY. CONNECT 1/2"CW TO SUPPLY AT WALL. SEE PLUMBING FIXTURE SCHEDULE ON DRAWING P3.101.
2. INSTALL NEW WALL HUNG LAVATORY, FAUCET, TAILPIECE, P-TRAP, POP-UP DRAIN, STOPS AND FLEXIBLE HOT AND COLD WATER SUPPLIES. CONNECT 1/2"HOT AND COLD WATER TO SUPPLIES AT WALL. CONNECT 1-1/2"W TO 1-1/2"W AT WALL. SEE PLUMBING FIXTURE SCHEDULE ON DRAWING P3.101.
3. SOLID SURFACE COUNTERTOP WITH INTEGRAL BOWL(S) (BY OTHERS). INSTALL FAUCET, TAILPIECE, P-TRAP, POP-UP DRAIN, STOPS AND FLEXIBLE HOT AND COLD WATER SUPPLIES. CONNECT 1/2"HOT AND COLD WATER TO SUPPLIES AT WALL. CONNECT 1-1/2"W TO 1-1/2"W AT WALL. SEE PLUMBING FIXTURE SCHEDULE ON DRAWING P3.101.
4. SHOWER BASE AND SURROUND (BY OTHERS). INSTALL NEW SHOWER HEAD, MIXING VALVE, AND FLOOR DRAIN. CONNECT 1/2"HOT AND COLD WATER TO HW AND CW IN WALL. CONNECT NEW 2"P-TRAP TO EXISTING 2"W ABOVE CEILING BELOW. SEE PLUMBING FIXTURE SCHEDULE ON DRAWING P3.101.
5. BATHTUB AND SURROUND (BY OTHERS). INSTALL NEW SHOWER HEAD, MIXING VALVE, TUB SPOUT AND TRIP LEVER BATHTUB DRAIN. CONNECT 1/2"HOT AND COLD WATER TO HW AND CW IN WALL. CONNECT NEW 2"W TO EXISTING 2"W ABOVE CEILING BELOW. SEE PLUMBING FIXTURE SCHEDULE ON DRAWING P3.101.

GROUND LEVEL FLOOR PLAN - PLUMBING

SCALE: 1/8"=1'-0"

TectonArchitects | inc

1 Hartford Sq. West, Hartford CT 06106
860 548 0802

17 Railroad Avenue, Westerly RI 02891
401 596 7555

tectonarchitects.com

Notice:
This drawing is the property of Tecton Architects | Inc The use, re-use or reproduction of this drawing for any purpose whatsoever without an expressed written agreement between Tecton Architects | inc and the user is prohibited. Rights to use the information on this sheet are not transferred until payment has been received for services rendered. Any rights so granted are non-transferable to other parties without the prior expressed written consent of Tecton Architects | Inc

©2012 Tecton Architects | Inc

Consultant

Owner

THE UNIVERSITY OF RHODE ISLAND

THINK BIG WE DO

Project

University of Rhode Island
BURNSIDE HALL
BATHROOM RENOVATIONS &
DOOR & SIGNAGE REPLACEMENT
KINGSTON, RI

Key Plan

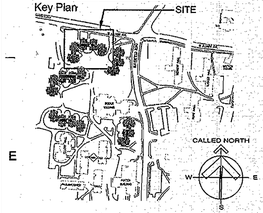

Seals

RICHARD C. NEWELL
No. 8486
REGISTERED PROFESSIONAL ENGINEER
MECHANICAL

Issues

Date	
12/20/2012	CONSTRUCTION DOCUMENTS

Revisions

No.	Date	Description

Drawing Title

GROUND LEVEL FLOOR PLAN PLUMBING

Issue Date:	12/20/2012		
Project No:	URI16IN	Scale:	AS NOTED
Project Manager:	WMS	Production Leader:	MS
Project Architect:	MT	Peer Reviewer:	RCN

Drawing Number

P2.201

CEC# 2012126

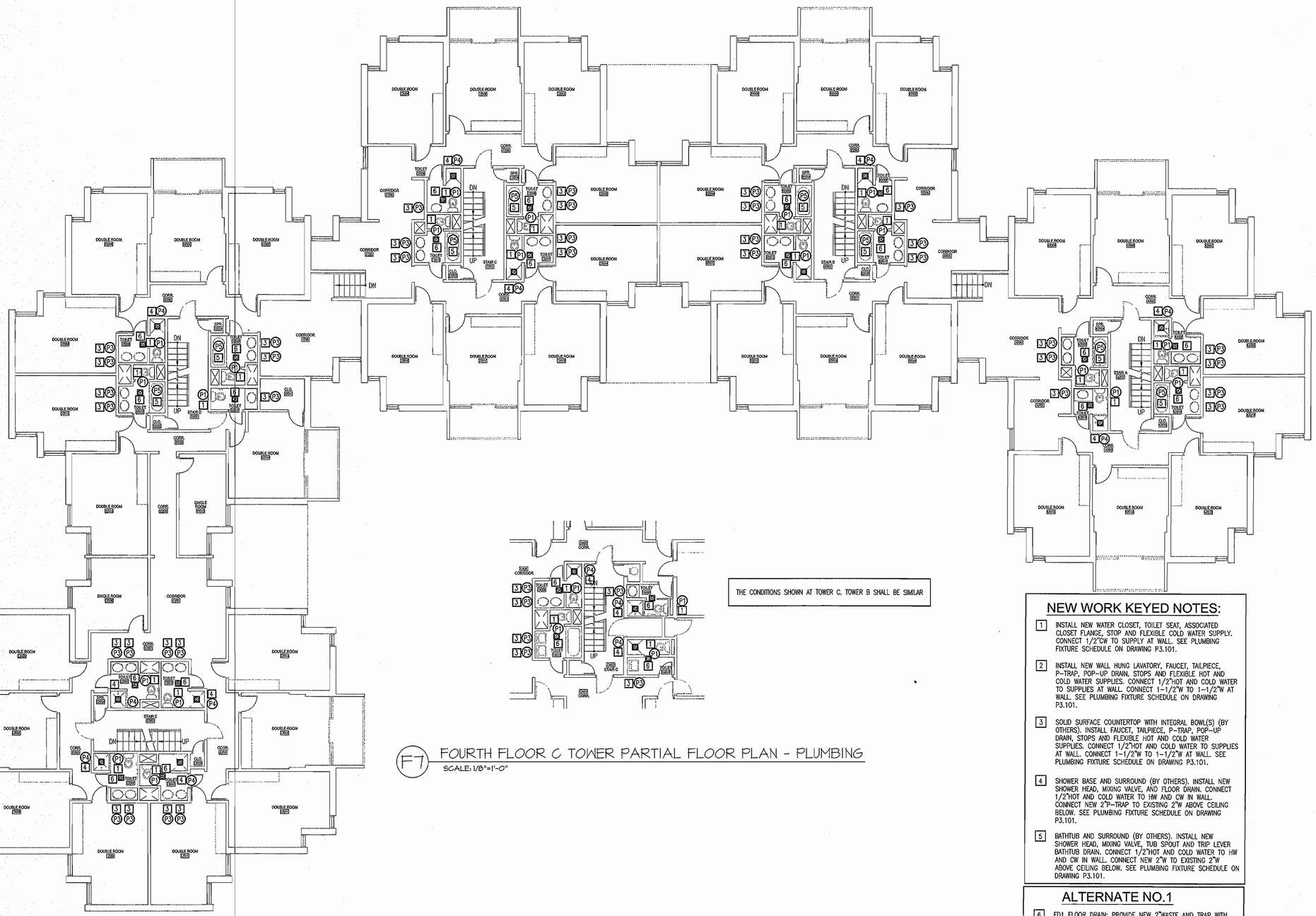

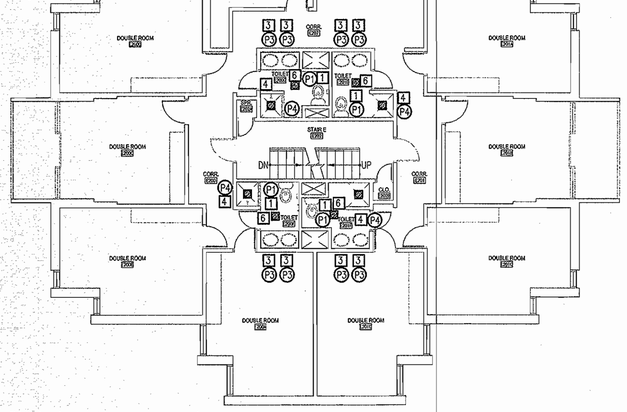

THE CONDITIONS SHOWN AT TOWER C. TOWER B SHALL BE SIMILAR

F7 FOURTH FLOOR C TOWER PARTIAL FLOOR PLAN - PLUMBING
SCALE: 1/8"=1'-0"

H10 SECOND THIRD & FOURTH LEVELS FLOOR PLAN - PLUMBING
SCALE: 1/8"=1'-0"

NEW WORK KEYED NOTES:

1. INSTALL NEW WATER CLOSET, TOILET SEAT, ASSOCIATED CLOSET FLANGE, STOP AND FLEXIBLE COLD WATER SUPPLY. CONNECT 1/2"CW TO SUPPLY AT WALL. SEE PLUMBING FIXTURE SCHEDULE ON DRAWING P3.101.
2. INSTALL NEW WALL HUNG LAVATORY, FAUCET, TAILPIECE, P-TRAP, POP-UP DRAIN, STOPS AND FLEXIBLE HOT AND COLD WATER SUPPLIES. CONNECT 1/2"HOT AND COLD WATER TO SUPPLIES AT WALL. CONNECT 1-1/2"W TO 1-1/2"W AT WALL. SEE PLUMBING FIXTURE SCHEDULE ON DRAWING P3.101.
3. SOLID SURFACE COUNTERTOP WITH INTEGRAL BOWL(S) (BY OTHERS). INSTALL FAUCET, TAILPIECE, P-TRAP, POP-UP DRAIN, STOPS AND FLEXIBLE HOT AND COLD WATER SUPPLIES. CONNECT 1/2"HOT AND COLD WATER TO SUPPLIES AT WALL. CONNECT 1-1/2"W TO 1-1/2"W AT WALL. SEE PLUMBING FIXTURE SCHEDULE ON DRAWING P3.101.
4. SHOWER BASE AND SURROUND (BY OTHERS). INSTALL NEW SHOWER HEAD, MIXING VALVE, AND FLOOR DRAIN. CONNECT 1/2"HOT AND COLD WATER TO HW AND CW IN WALL. CONNECT NEW 2"P-TRAP TO EXISTING 2"W ABOVE CEILING BELOW. SEE PLUMBING FIXTURE SCHEDULE ON DRAWING P3.101.
5. BATHTUB AND SURROUND (BY OTHERS). INSTALL NEW SHOWER HEAD, MIXING VALVE, TUB SPOUT AND TRIP LEVER BATHTUB DRAIN. CONNECT 1/2"HOT AND COLD WATER TO HW AND CW IN WALL. CONNECT NEW 2"W TO EXISTING 2"W ABOVE CEILING BELOW. SEE PLUMBING FIXTURE SCHEDULE ON DRAWING P3.101.

ALTERNATE NO.1

6. FD1 FLOOR DRAIN: PROVIDE NEW 2"WASTE AND TRAP WITH 1-1/2"VENT – CONNECT NEW 2"W AND 1-1/2"V TO EXISTING 4"SOIL STACK (ABOVE CEILING BELOW) AND 4"VENT STACK (ABOVE FLOOD LEVEL OF DRAIN), RESPECTIVELY, AT NEAREST CHASE. SEE DRAIN SCHEDULE ON DRAWING P3.101.

TectonArchitects | inc
1 Hartford Sq. West, Hartford CT 06106
860 548 0802
17 Railroad Avenue, Westerly RI 02891
401 596 7555
tectonarchitects.com

Notice:
This drawing is the property of Tecton Architects | inc The use, re-use or reproduction of this drawing for any purpose whatsoever without an expressed written agreement between Tecton Architects | inc and the user is prohibited. Rights to use the information on this sheet are not transferred until payment has been received for services rendered. Any rights so granted are non-transferable to other parties without the prior expressed written consent of Tecton Architects | inc

© 2012 Tecton Architects | inc

Consultant

Owner
THE UNIVERSITY OF RHODE ISLAND
THINK BIG WE DO

Project
University of Rhode Island
BURNSIDE HALL
BATHROOM RENOVATIONS & DOOR & SIGNAGE REPLACEMENT
KINGSTON, RI

Key Plan

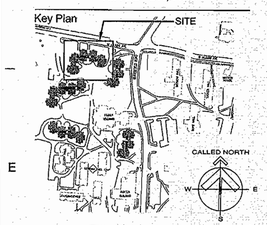

Seals

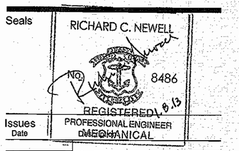

Issues	Date
CONSTRUCTION DOCUMENTS	12/20/2012

Revisions

No.	Date	Description

Drawing Title

SECOND, THIRD, & FOURTH FLOORS PLUMBING

Issue Date:	12/20/2012		
Project No:	URI16IN	Scale:	AS NOTED
Project Manager:	WMS	Production Leader:	MS
Project Architect:	MT	Peer Reviewer:	RCN

Drawing Number

P2.202

CEC# 2012126

PLUMBING FIXTURE SCHEDULE

SYMBOL	DESCRIPTION	CONNECTIONS				FIXTURE	FITTINGS	REMARKS
		WASTE	VENT	HOT WATER	COLD WATER			
P1	TANK TYPE WATER CLOSET	4"	2"	–	1/2"	KOHLER # 3880	USE METAL CLOSET FLANGE – SECURE FLANGE TO CONCRETE FLOOR	VITREOUS CHINA, FLOOR MOUNTED, TANK TYPE WATER CLOSET WITH ROUND RIM WITH MATCHING ROUND SOFTCLOSE SEAT AND COVER #K-4658. 1.6 GALLON GALLONS PER FLUSH. PROVIDE "MCGUIRE" HEAVY DUTY STOP AND CHROME PLATED SUPPLY. VERIFY EXISTING ROUGH-IN WASTE DIMENSION MATCHES NEW ROUGH-IN WASTE DIMENSION BEFORE ORDERING FIXTURE.
P2	WALL HUNG LAVATORY	1-1/2"	1-1/2"	1/2"	1/2"	TOTO # LT307.4	SYMMONS # S-250-LWG	VITREOUS CHINA, WALL HUNG LAVATORY. CHROME PLATED, SINGLE LEVER, 4" CENTERS FAUCET FLOWING AT 2.2 GPM. PROVIDE POP UP DRAIN WITH LIFT ROD. PROVIDE "MCGUIRE" HEAVY DUTY STOPS, SUPPLIES, TRAP & TAILPIECE.
P3	COUNTERTOP LAVATORY	1-1/2"	1-1/2"	1/2"	1/2"	SOLID SURFACE COUNTER WITH INTEGRAL BOWL(S) (BY OTHERS)	SYMMONS # S-250-LWG	SOLID SURFACE COUNTER WITH INTEGRAL BOWL(S) (BY OTHERS). CHROME PLATED, SINGLE LEVER, 4" CENTERS FAUCET FLOWING AT 2.2 GPM. PROVIDE POP UP DRAIN. PROVIDE "MCGUIRE" HEAVY DUTY STOPS, SUPPLIES, TRAP & TAILPIECE.
P4	SHOWER	2"	2"	1/2"	1/2"	SHOWER BASE & SURROUND (BY OTHERS)	SYMMONS # S-96-1-X FD1 – SEE SCHEDULE	SHOWER BASE & SURROUND BY OTHERS. SHOWER CONTROLS WITH INTEGRAL STOPS.
P5	BATHTUB	2"	2"	1/2"	1/2"	BATHTUB & SURROUND (BY OTHERS)	SYMMONS # S-96-2-X WATCO # 501TL	BATHTUB & SURROUND BY OTHERS. SHOWER / BATHTUB CONTROLS WITH INTEGRAL STOPS AND DIVERTER. INCLUDE TRIP LEVER BATHTUB DRAIN.

FLOOR DRAIN AND CLEANOUT SCHEDULE

TYPE	SIZE	LOCATION	MODEL #	REMARKS
FD1	2"	SHOWERS AND ALTERNATE NO. 1	ZURN # ZN-415-S-EF-DP-VP	DURA-COATED CAST IRON BODY W/ BOTTOM OUTLET, 6" TYPE "S" DECORATIVE POLISHED NICKLE BRONZE STRAINER, VANDAL-PROOF SECURED TOP. COORDINATE INSTALLATION W/ COPPER PAN. ALTERNATE NO. 1 SHALL INCLUDE 2" "SURE SEAL" NEOPRENE TRAP SEAL SET IN FLOOR DRAIN.

PLUMBING LEGEND

SYMBOL	ABBR.	DESCRIPTION
	S/W	SOIL/WASTE PIPE BELOW SLAB
	V	VENT PIPE BELOW SLAB
	S/W	SOIL/WASTE PIPE ABOVE SLAB
	V	VENT PIPE ABOVE FLOOR SLAB
	CW	COLD WATER PIPE
	HW	HOT WATER PIPE
	HWR	HOT WATER RETURN PIPE
		REMOVE EXISTING PLUMBING FIXTURE
FD	FD	FLOOR DRAIN – SEE SCHEDULE
	CTE	CONNECT TO EXISTING
P1		PLUMBING FIXTURE DESIGNATION
1		DEMOLITION KEYED NOTE
1		NEW WORK KEYED NOTE
	ETR	EXISTING TO REMAIN
	VIF	VERIFY LOCATION, SIZE & FLOW IN FIELD
	TYP	TYPICAL

Tecton Architects | inc
1 Hartford Sq. West, Hartford CT 06106
860 548 0802
17 Railroad Avenue, Westerly RI 02891
401 596 7555
tectonarchitects.com

Notice:
This drawing is the property of Tecton Architects | Inc The use, re-use or reproduction of this drawing for any purpose whatsoever without an expressed written agreement between Tecton Architects | Inc and the usar is prohibited. Rights to use the information on this sheet are not transferred until payment has been received for services rendered. Any rights so granted are non-transferable to other parties without the prior expressed written consent of Tecton Architects | Inc

©2012 Tecton Architects | Inc

Consultant

Owner
THE UNIVERSITY OF RHODE ISLAND
THINK BIG WE DO

Project
University of Rhode Island
BURNSIDE HALL
BATHROOM RENOVATIONS & DOOR & SIGNAGE REPLACEMENT
KINGSTON, RI

Key Plan

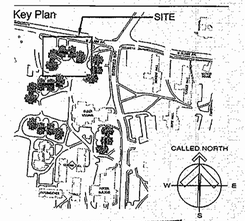

Seals

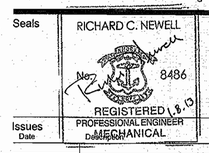

Issues

Date	Description
12/20/2012	CONSTRUCTION DOCUMENTS

Revisions

No.	Date	Description

Drawing Title
LEGEND AND SCHEDULES - PLUMBING

Issue Date:	12/20/2012		
Project No:	URI16IN	Scale:	AS NOTED
Project Manager:	WMS	Production Leader:	MS
Project Architect:	MT	Peer Reviewer:	RCN

Drawing Number
P3.101

CEC# 2012126

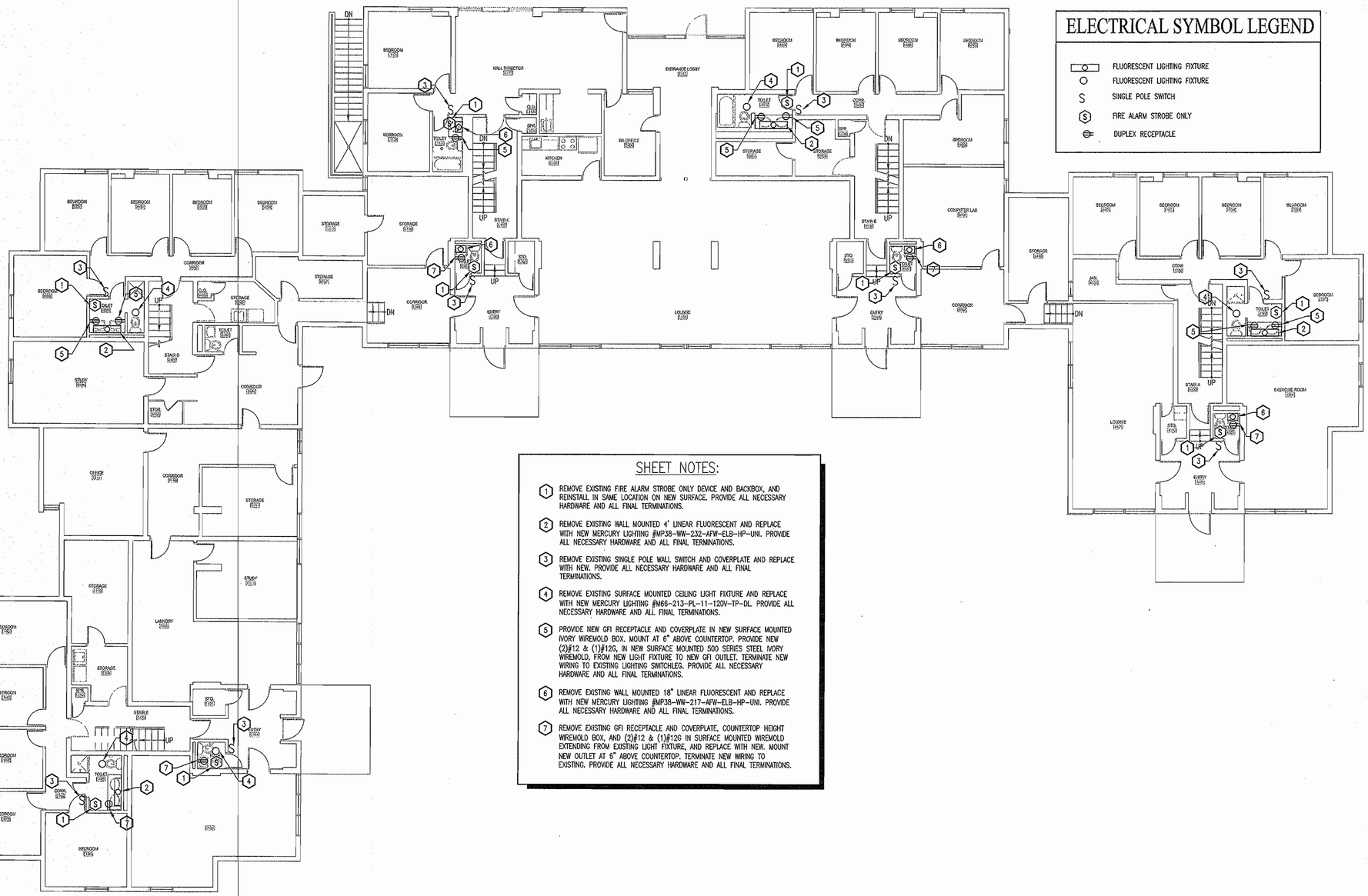

ELECTRICAL SYMBOL LEGEND

- FLUORESCENT LIGHTING FIXTURE
- FLUORESCENT LIGHTING FIXTURE
- S SINGLE POLE SWITCH
- (S) FIRE ALARM STROBE ONLY
- DUPLEX RECEPTACLE

SHEET NOTES:

1. REMOVE EXISTING FIRE ALARM STROBE ONLY DEVICE AND BACKBOX, AND REINSTALL IN SAME LOCATION ON NEW SURFACE. PROVIDE ALL NECESSARY HARDWARE AND ALL FINAL TERMINATIONS.
2. REMOVE EXISTING WALL MOUNTED 4' LINEAR FLUORESCENT AND REPLACE WITH NEW MERCURY LIGHTING #MP38-WW-232-AFW-ELB-HP-UNI. PROVIDE ALL NECESSARY HARDWARE AND ALL FINAL TERMINATIONS.
3. REMOVE EXISTING SINGLE POLE WALL SWITCH AND COVERPLATE AND REPLACE WITH NEW. PROVIDE ALL NECESSARY HARDWARE AND ALL FINAL TERMINATIONS.
4. REMOVE EXISTING SURFACE MOUNTED CEILING LIGHT FIXTURE AND REPLACE WITH NEW MERCURY LIGHTING #M66-213-PL-11-120V-TP-DL. PROVIDE ALL NECESSARY HARDWARE AND ALL FINAL TERMINATIONS.
5. PROVIDE NEW GFI RECEPTACLE AND COVERPLATE IN NEW SURFACE MOUNTED IVORY WIREMOLD BOX. MOUNT AT 6" ABOVE COUNTERTOP. PROVIDE NEW (2)#12 & (1)#12G, IN NEW SURFACE MOUNTED 500 SERIES STEEL IVORY WIREMOLD, FROM NEW LIGHT FIXTURE TO NEW GFI OUTLET. TERMINATE NEW WIRING TO EXISTING LIGHTING SWITCHLEG. PROVIDE ALL NECESSARY HARDWARE AND ALL FINAL TERMINATIONS.
6. REMOVE EXISTING WALL MOUNTED 18" LINEAR FLUORESCENT AND REPLACE WITH NEW MERCURY LIGHTING #MP38-WW-217-AFW-ELB-HP-UNI. PROVIDE ALL NECESSARY HARDWARE AND ALL FINAL TERMINATIONS.
7. REMOVE EXISTING GFI RECEPTACLE AND COVERPLATE, COUNTERTOP HEIGHT WIREMOLD BOX, AND (2)#12 & (1)#12G IN SURFACE MOUNTED WIREMOLD EXTENDING FROM EXISTING LIGHT FIXTURE, AND REPLACE WITH NEW. MOUNT NEW OUTLET AT 6" ABOVE COUNTERTOP. TERMINATE NEW WIRING TO EXISTING. PROVIDE ALL NECESSARY HARDWARE AND ALL FINAL TERMINATIONS.

H1C GROUND LEVEL ELECTRICAL PLAN
SCALE: 1/8"=1'-0"

TectonArchitects | inc
1 Hartford Sq. West, Hartford CT 06106
860 548 0802
17 Railroad Avenue, Westerly RI 02891
401 596 7555
tectonarchitects.com

Notice:
This drawing is the property of Tecton Architects | inc.The use, re-use or reproduction of this drawing for any purpose whatsoever without an expressed written agreement between Tecton Architects | inc and the user is prohibited. Rights to use the information on this sheet are not transferred until payment has been received for services rendered. Any rights so granted are non-transferable to other parties without the prior expressed written consent of Tecton Architects | inc
© 2012 Tecton Architects | inc

Consultant

Owner
THE UNIVERSITY OF RHODE ISLAND
THINK BIG WE DO

Project
University of Rhode Island
BURNSIDE HALL
BATHROOM RENOVATIONS & DOOR & SIGNAGE REPLACEMENT
KINGSTON, RI

Key Plan

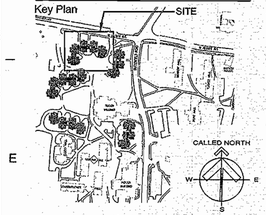

Seals

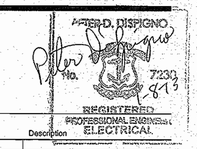

Issues

Date	Description
12/20/2012	CONSTRUCTION DOCUMENTS

Revisions

No.	Date	Description

Drawing Title

GROUND LEVEL ELECTRICAL PLAN

Issue Date:	12/20/2012
Project No: URI16IN	Scale: AS NOTED
Project Manager: WMS	Production Leader: WMS
Project Architect:	Peer Reviewer: PDS

Drawing Number

E2.101

CEC# 2012126

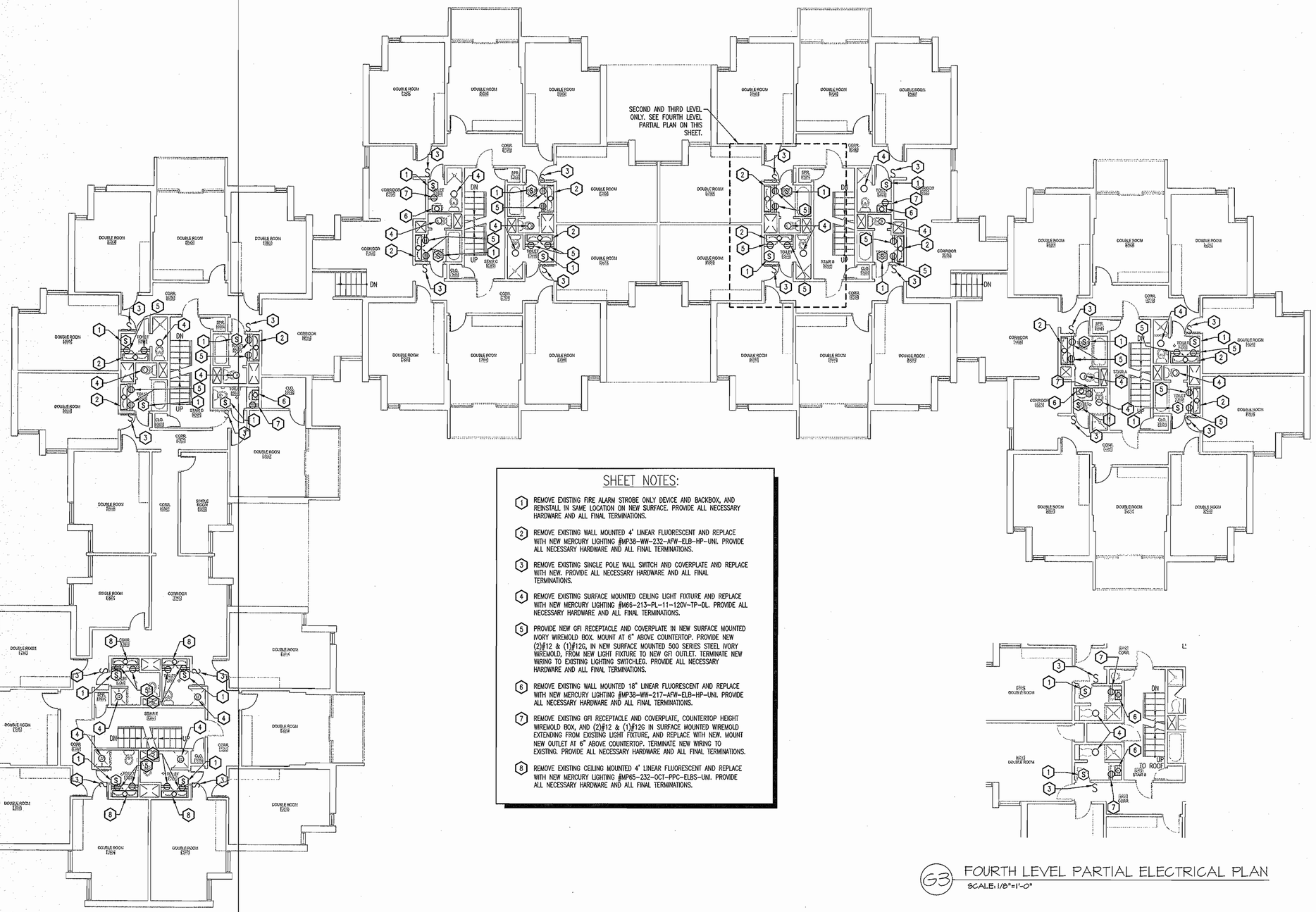

SHEET NOTES:

1. REMOVE EXISTING FIRE ALARM STROBE ONLY DEVICE AND BACKBOX, AND REINSTALL IN SAME LOCATION ON NEW SURFACE. PROVIDE ALL NECESSARY HARDWARE AND ALL FINAL TERMINATIONS.
2. REMOVE EXISTING WALL MOUNTED 4' LINEAR FLUORESCENT AND REPLACE WITH NEW MERCURY LIGHTING #MP38-WW-232-AFW-ELB-HP-UNI. PROVIDE ALL NECESSARY HARDWARE AND ALL FINAL TERMINATIONS.
3. REMOVE EXISTING SINGLE POLE WALL SWITCH AND COVERPLATE AND REPLACE WITH NEW. PROVIDE ALL NECESSARY HARDWARE AND ALL FINAL TERMINATIONS.
4. REMOVE EXISTING SURFACE MOUNTED CEILING LIGHT FIXTURE AND REPLACE WITH NEW MERCURY LIGHTING #M66-213-PL-11-120V-TP-DL. PROVIDE ALL NECESSARY HARDWARE AND ALL FINAL TERMINATIONS.
5. PROVIDE NEW GFI RECEPTACLE AND COVERPLATE IN NEW SURFACE MOUNTED IVORY WIREMOLD BOX. MOUNT AT 6" ABOVE COUNTERTOP. PROVIDE NEW (2)#12 & (1)#12G, IN NEW SURFACE MOUNTED 500 SERIES STEEL IVORY WIREMOLD, FROM NEW LIGHT FIXTURE TO NEW GFI OUTLET. TERMINATE NEW WIRING TO EXISTING LIGHTING SWITCHLEG. PROVIDE ALL NECESSARY HARDWARE AND ALL FINAL TERMINATIONS.
6. REMOVE EXISTING WALL MOUNTED 18" LINEAR FLUORESCENT AND REPLACE WITH NEW MERCURY LIGHTING #MP38-WW-217-AFW-ELB-HP-UNI. PROVIDE ALL NECESSARY HARDWARE AND ALL FINAL TERMINATIONS.
7. REMOVE EXISTING GFI RECEPTACLE AND COVERPLATE, COUNTERTOP HEIGHT WIREMOLD BOX, AND (2)#12 & (1)#12G IN SURFACE MOUNTED WIREMOLD EXTENDING FROM EXISTING LIGHT FIXTURE, AND REPLACE WITH NEW. MOUNT NEW OUTLET AT 6" ABOVE COUNTERTOP. TERMINATE NEW WIRING TO EXISTING. PROVIDE ALL NECESSARY HARDWARE AND ALL FINAL TERMINATIONS.
8. REMOVE EXISTING CEILING MOUNTED 4' LINEAR FLUORESCENT AND REPLACE WITH NEW MERCURY LIGHTING #MP65-232-OCT-PPC-ELBS-UNI. PROVIDE ALL NECESSARY HARDWARE AND ALL FINAL TERMINATIONS.

G3 FOURTH LEVEL PARTIAL ELECTRICAL PLAN
SCALE: 1/8"=1'-0"

H10 SECOND, THIRD, FOURTH LEVEL ELECTRICAL PLAN - FOURTH LEVEL TOWER "B" SIMILAR, SEE PARTIAL PLAN THIS SHEET
SCALE: 1/8"=1'-0"

TectonArchitects | inc
1 Hartford Sq. West, Hartford CT 06106
860 548 0802
17 Railroad Avenue, Westerly RI 02891
401 596 7555
tectonarchitects.com

Notice:
This drawing is the property of Tecton Architects | Inc The use, re-use or reproduction of this drawing for any purpose whatsoever without an expressed written agreement between Tecton Architects | Inc and the user is prohibited. Rights to use the information on this sheet are not transferred until payment has been received for services rendered. Any rights so granted are non-transferable to other parties without the prior expressed written consent of Tecton Architects | Inc

© 2012 Tecton Architects | Inc

Consultant

Owner
THE UNIVERSITY OF RHODE ISLAND
THINK BIG WE DO

Project
University of Rhode Island
BURNSIDE HALL
BATHROOM RENOVATIONS & DOOR & SIGNAGE REPLACEMENT
KINGSTON, RI

Key Plan

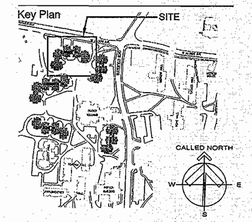

Seals

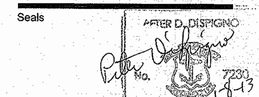

Issues

Date	Description
12/20/2012	CONSTRUCTION DOCUMENTS

Revisions

No.	Date	Description

Drawing Title

SECOND THRU FOURTH LEVEL ELECTRICAL PLAN

Issue Date:	12/20/2012
Project No: URI16IN	Scale: AS NOTED
Project Manager: WMS	Production Leader: WMS
Project Architect:	Peer Reviewer: PDS

Drawing Number

E2.102

CEC# 2012126