UNIVERSITY OF RHODE ISLAND

Office of Capital Projects

PLANS AND DETAILS OF PROPOSED
TIBBET'S ATHLETIC FIELDS
KINGSTON, RHODE ISLAND

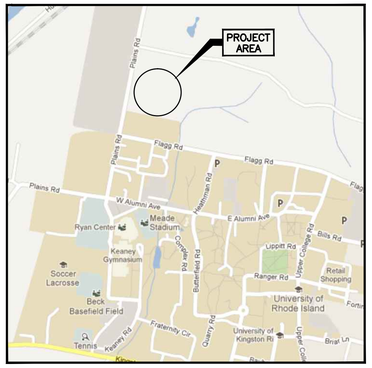

LOCATION MAP
NOT TO SCALE

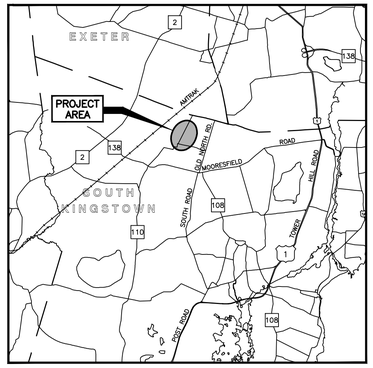

LOCATION MAP
SCALE: 1" = 2 Miles

INDEX

SHEET NO.	DESCRIPTION
1	COVER SHEET
2	GENERAL NOTES & LEGEND
3	FOOTBALL AND SOCCER FIELD SITE PLAN
4	DETAILS
5	ELECTRICAL SITE PLAN
6	ELECTRICAL DETAILS
7	ELECTRICAL LEGEND AND SCHEDULE

UNIVERSITY OF
Rhode Island

JULY 2015

TODD A. RAVENELLE
No. 5888
REGISTERED
PROFESSIONAL ENGINEER

Gordon R. Archibald, Inc.
Civil and Environmental Engineers

Number of Sheet 1
Total Sheets 7

LEGEND

1.3.0	CONCRETE CONNECTING COLLAR
4.2.0	PRECAST 4'–0" ROUND MANHOLE
4.6.0	CONCRETE COVER FOR SHALLOW 4'–0" MANHOLES
4.7.2	ALTERNATE TOP COVER FOR ROUND PRECAST MANHOLES AND CATCH BASINS
5.3.0	CATCH BASIN AND MANHOLE STEP
6.2.1	HEAVY–DUTY ROUND FRAME AND COVER
7.1.0	PRECAST CONCRETE CURB
7.3.0	GRANITE CURB
7.6.0	CURB SETTING DETAIL
8.4.0	PAVED WATERWAY
31.2.0 (MOD.)	CHAIN LINK FENCE 6'–0" WITH TOP RAIL
43.1.0	CEMENT CONCRETE SIDEWALK
CBP	CATCH BASIN INLET PROTECTION
CG	CLEAR AND GRUB
LOD	LIMIT OF DISTURBANCE
LS	6–INCH LOAM AND SEED
ELEV.	EXISTING CONTOUR LINE
x ELEV.	EXISTING SPOT GRADE
118	FUTURE CONTOUR LINE
INV. 112.10	FUTURE DRAINAGE INVERTS
E E	PROPOSED ELECTRIC CONDUIT
x x x	PROPOSED FENCE
	SAWCUT AND MATCH EXISTING PAVEMENT
ELEV	PROPOSED CONTOUR LINE
x ELEV.	PROPOSED SPOT GRADE
	PROPOSED FIELD LIGHTS
B–1	BORING

GENERAL NOTES

1. REFERENCE IS MADE TO THE LATEST EDITIONS OF THE RHODE ISLAND DEPARTMENT OF TRANSPORTATION (RIDOT) "STANDARD SPECIFICATIONS FOR ROAD AND BRIDGE CONSTRUCTION" (AMENDED DECEMBER 2010, INCLUDING ALL SUBSEQUENTLY ISSUED SUPPLEMENTS, REVISIONS, AND ADDENDA) AND THE "RHODE ISLAND STANDARD DETAILS" (1998, INCLUDING ALL SUBSEQUENT REVISIONS, ADDITIONS AND DELETIONS ISSUED BY THE RIDOT). ALL PROJECT SITE IMPROVEMENTS SHALL CONFORM TO THE APPLICABLE STANDARDS SET FORTH IN THESE DOCUMENTS (AND THE SUB–REFERENCES INCORPORATED THEREIN) UNLESS OTHERWISE INDICATED IN THE CONTRACT DOCUMENTS.

2. THE PROJECT LIMITS OF CLEARING AND SURFACE DISTURBANCE MUST BE STRICTLY ADHERED TO IN ALL AREAS. IN ADDITION TO THOSE AREAS SPECIFICALLY DESIGNATED ON THE PLANS, THE CONTRACTOR WILL BE RESPONSIBLE FOR RESTORING (THROUGH PROVISION AND PLACEMENT OF LOAM AND SEED) ANY UNPAVED AREAS OUTSIDE OF THE PROJECT LIMITS OF DISTURBANCE IMPACTED BY CONSTRUCTION OPERATIONS. ANY REQUIRED RESTORATION OUTSIDE THE PROJECT LIMITS OF DISTURBANCE SHALL BE COMPLETED TO THE SATISFACTION OF THE ENGINEER AND AT THE CONTRACTOR'S EXPENSE.

3. ANY DAMAGE CAUSED BY THE CONTRACTOR TO EXISTING CURBING, SIDEWALKS, PAVEMENTS, FENCES, OR OTHER SITE FEATURES TO REMAIN IN PLACE SHALL BE REPAIRED OR REPLACED BY THE CONTRACTOR AT NO ADDITIONAL COST TO THE OWNER.

4. THE CONTRACTOR SHALL BE RESPONSIBLE FOR THE DISPOSAL OF ALL EXCESS EXCAVATED PAVEMENTS, CURBING, SIDEWALKS, CURB STOPS, AND OTHER CONSTRUCTION WASTE IN ACCORDANCE WITH ALL APPLICABLE LOCAL, STATE AND FEDERAL LAWS AND REGULATIONS.

5. THE CONTRACTOR SHALL MAINTAIN ALL EXCAVATION IN A DRY CONDITION. NO SEPARATE PAYMENT OR ALLOWANCE SHALL BE MADE FOR DEWATERING.

6. THE CONTRACTOR SHALL BE RESPONSIBLE FOR REMOVING SEDIMENTS FROM DEWATERING OPERATION DISCHARGES THROUGH THE USE OF STILLING BASINS, FILTER FABRIC DEVICES, AND/OR OTHER SUITABLE MEANS AS APPROVED BY THE ENGINEER.

7. FILL REQUIRED FOR EMBANKMENTS SHALL CONFORM TO THE REQUIREMENTS FOR COMMON BORROW SET FORTH IN SECTION M.01.01 OF THE RIDOT STANDARD SPECIFICATIONS FOR ROAD AND BRIDGE CONSTRUCTION, LATEST EDITION.

8. THE CONTRACTOR SHALL PROVIDE CONTINUOUS DUST CONTROL (USING WATER AND/OR CALCIUM CHLORIDE OR OTHER APPROVED METHODS) FOR ALL EARTH STOCKPILES, EARTH PILED ALONG EXCAVATIONS AND SURFACES OF BACK FILLED TRENCHES, IN ACCORDANCE WITH THE RIDOT STANDARD SPECIFICATIONS AND AS DIRECTED BY THE ENGINEER.

9. THE CONTRACTOR SHALL PROVIDE ALL REQUIRED NOTICES AND COMPLY WITH ALL PERMITS, LAWS, ORDINANCES, RULES AND REGULATIONS BEARING ON THE CONDUCT OF THE WORK AS DRAWN AND SPECIFIED IN THE CONTRACT DOCUMENTS.

10. EXISTING UTILITIES HAVE BEEN PLOTTED FROM BEST AVAILABLE DATA AND ARE APPROXIMATE ONLY. IN ACCORDANCE WITH CURRENT STATE "DIG SAFE" LAWS AND RULES, THE CONTRACTOR SHALL VERIFY THE LOCATIONS OF ALL EXISTING DRAINAGE SYSTEM ELEMENTS AND UTILITIES (BOTH UNDERGROUND AND OVERHEAD) BEFORE ANY EXCAVATION MAY COMMENCE. THE CONTRACTOR IS ADVISED THAT (A) NOT ALL UTILITY PROVIDERS SUBSCRIBE TO THE DIG SAFE PROGRAM, AND (B) IT IS THE CONTRACTOR'S RESPONSIBILITY TO NOTIFY ALL POTENTIALLY AFFECTED UTILITY COMPANIES AND ENSURE THAT ALL UTILITIES HAVE BEEN MARKED PRIOR TO THE COMMENCEMENT OF WORK. EXCAVATION SHALL BE PERFORMED IN ACCORDANCE WITH ALL APPLICABLE STATUTES, ORDINANCES, RULES AND REGULATIONS OF ANY MUNICIPAL, STATE OR FEDERAL AGENCY OR AUTHORITY HAVING JURISDICTION OVER THE WORK. ANY DAMAGE TO EXISTING UTILITIES MARKED IN THE FIELD OR UNMARKED UTILITIES (AS A RESULT OF FAILING TO CONTACT THE APPROPRIATE UTILITY COMPANY) SHALL BE REPAIRED OR REPLACED BY THE CONTRACTOR AT NO COST TO THE OWNER.

11. THE CONTRACTOR IS ADVISED THAT WORK UNDER EXISTING OVERHEAD UTILITIES IS REQUIRED, AND THAT MINIMUM CLEARANCES SHALL BE MAINTAINED AT ALL TIMES IN ACCORDANCE WITH UTILITY COMPANY REQUIREMENTS. THIS MAY REQUIRE SPECIAL MEANS AND METHODS IN ORDER TO PROPERLY COMPLETE THE WORK. SHOULD THE CONTRACTOR ELECT TO RELOCATE EXISTING OVERHEAD UTILITIES, THEN THE CONTRACTOR SHALL CONDUCT ALL COORDINATION WITH THE AFFECTED UTILITY COMPANIES AND BEAR ALL COSTS ASSOCIATED WITH UTILITY RELOCATIONS NOT INCLUDED IN THE CONTRACT.

12. PRIOR TO DRAINAGE AND UTILITY CONSTRUCTION, THE CONTRACTOR IS RESPONSIBLE FOR VERIFYING THE LOCATION (HORIZONTAL AND VERTICAL) OF ALL EXISTING PIPES AND/OR STRUCTURES WHICH ARE TO BE CONNECTED OR REMOVED. ANY VARIATION FROM THE PLANS MUST BE BROUGHT TO THE ENGINEER'S ATTENTION PRIOR TO DRAINAGE AND UTILITY CONSTRUCTION, WHEREUPON WORK CAN COMMENCE ONLY UPON THE ENGINEER'S AUTHORIZATION.

13. ALL EXISTING PIPE, SUBSURFACE STRUCTURES, PAVEMENTS, EXCESS EXCAVATED MATERIALS AND MISCELLANEOUS MATERIALS REMOVED IN THE COURSE OF UTILITY WORK (INSTALLATION OF DRAINAGE, WATER AND SEWER PIPING, ETC.) SHALL BE LEGALLY DISPOSED OF BY THE CONTRACTOR AT AN OFFSITE LOCATION.

14. WHERE UNDERGROUND UTILITY CROSSINGS ARE REQUIRED, AT LEAST TWO (2) TEST PITS SHALL BE DUG TO DETERMINE THE LOCATION/DEPTH AND MATERIAL OF THE EXISTING UTILITY.

15. UTILITY SERVICES TO EXISTING BUILDINGS AND FACILITIES SHALL BE MAINTAINED AT ALL TIMES FOR THE DURATION OF CONSTRUCTION.

16. THE CONTRACTOR SHALL ADJUST ALL UTILITY BOXES, FRAMES, AND COVERS AS REQUIRED TO MATCH FINISH GRADE.

EROSION AND SEDIMENT CONTROL NOTES:

1. SOIL EROSION AND SEDIMENTATION CONTROL MEASURES TO BE EMPLOYED ON THE PROJECT ARE INDICATED ON THE PLANS. CONTROL MEASURES SHALL BE FURNISHED, INSTALLED, MAINTAINED FOR THE DURATION OF CONSTRUCTION, AND SUBSEQUENTLY REMOVED, ALL IN ACCORDANCE WITH THE RIDOT STANDARD SPECIFICATIONS, THE LATEST EDITION OF THE "RHODE ISLAND SOIL EROSION AND SEDIMENT CONTROL HANDBOOK" (REVISED 2014), AND ANY SITE–SPECIFIC EROSION AND SEDIMENT CONTROL / POLLUTION PREVENTION PLAN INCLUDED IN THE CONTRACT DOCUMENTS.

2. ALL CLEARING, GRADING AND EARTHWORK ACTIVITIES SHALL REMAIN STRICTLY WITHIN THE LIMITS OF DISTURBANCE (LOD) DEPICTED ON THE PLANS AND SHALL BE RESTRICTED TO ACTIVITIES NECESSARY FOR COMPLETION OF THE WORK. THE CONTRACTOR SHALL ENSURE THAT ALL AREAS OUTSIDE THE LIMITS OF DISTURBANCE REMAIN UNDISTURBED AND PROTECTED FROM CONSTRUCTION IMPACTS.

3. ALL EROSION AND SEDIMENTATION CONTROL MEASURES SHALL BE ROUTINELY INSPECTED AND MAINTAINED IN ACCORDANCE WITH THE RIDOT STANDARD SPECIFICATIONS, THE RHODE ISLAND SOIL EROSION AND SEDIMENT CONTROL HANDBOOK, AND THE APPLICABLE CONDITIONS OF ANY REGULATORY/ENVIRONMENTAL PERMITS ISSUED FOR THE PROJECT.

4. PRIOR TO THE COMMENCEMENT OF ANY CONSTRUCTION ACTIVITIES, EROSION AND SEDIMENTATION CONTROLS SHALL BE INSTALLED AT LOCATIONS AND AREAS SHOWN ON THE PLANS. CLEARING MAY OCCUR PRIOR TO INSTALLATION OF SUCH CONTROLS; HOWEVER NO GRUBBING, GRADING, FILLING, OR OTHER SOIL DISTURBANCE SHALL OCCUR PRIOR TO INSTALLATION.

5. PERIMETER EROSION CONTROL BARRIERS (STAKED COMPOST FILTER SOCK, SILT FENCE, OR OTHER DEVICES AS INDICATED) SHALL BE INSTALLED IN CONTINUOUS UNINTERRUPTED RUNS AT THE LOCATIONS INDICATED ON THE PLANS AND MAINTAINED IN EFFECTIVE CONDITION UNTIL ALL DISTURBED AREAS HAVE BEEN STABILIZED WITH VEGETATION. FOLLOWING SUCCESSFUL STABILIZATION OF DISTURBED AREAS, ALL PERIMETER EROSION CONTROL BARRIERS SHALL BE REMOVED. PRIOR TO REMOVAL OF THE DEVICES, ALL ACCUMULATED SEDIMENT AND DEBRIS TRAPPED BY THE BARRIERS SHALL BE REMOVED AND DISPOSED OF LEGALLY AT A SUITABLE OFFSITE LOCATION.

6. THE TOE OF ANY FILL SLOPE IS TO REMAIN AT LEAST ONE (1) FOOT INSIDE OF ALL PERIMETER EROSION CONTROL BARRIERS. UNDER NO CIRCUMSTANCES SHALL THE CONTRACTOR COVER ANY PORTION OF THE EROSION CONTROL MEASURES WITH MATERIAL. ANY MATERIAL THAT IS PLACED ON ANY EROSION CONTROLS BY THE CONTRACTOR (OR ANY AGENT OF THE CONTRACTOR) SHALL BE IMMEDIATELY REMOVED, AND ANY NECESSARY REPAIRS TO THE EROSION CONTROLS SUBSEQUENTLY IMPLEMENTED AT NO COST TO THE OWNER.

7. UNTIL VEGETATIVE COVER IS ESTABLISHED AND DISTURBED AREAS ARE FULLY STABILIZED, TRAPPED SEDIMENTS SHALL BE PERIODICALLY REMOVED FROM PERIMETER EROSION CONTROL BARRIERS. AT A MINIMUM, MATERIAL SHALL BE REMOVED ONCE THE DEPTH OF ACCUMULATED SEDIMENT REACHES SIX (6) INCHES OR ONE–HALF THE BARRIER HEIGHT, WHICHEVER IS LESS. ALL REMOVED MATERIAL SHALL BE DISPOSED OF LEGALLY AT A SUITABLE OFFSITE LOCATION.

8. ALL MATERIAL STOCKPILES SHALL BE LOCATED WITHIN THE LIMITS OF DISTURBANCE (LOD) DEPICTED ON THE PLANS AND SHALL BE SURROUNDED BY A SECURED PERIMETER OF COMPOST FILTER SOCK.

9. ALL EXISTING AND CONSTRUCTED DRAINAGE SYSTEM INLETS SHALL BE PROVIDED WITH INLET PROTECTION DEVICES (FILTER BAGS/SILT SACKS, SANDBAGS, WATTLES, ETC.) AS INDICATED ON THE PLANS. ALL INLET PROTECTION DEVICES SHALL BE INSTALLED, MAINTAINED, AND CLEANED FOR THE DURATION OF CONSTRUCTION AND UNTIL ALL STORMWATER CONTROLS ARE FULLY STABILIZED AND ONLINE, AT WHICH TIME THEY SHALL BE REMOVED.

10. DURING CONSTRUCTION, THE CONTRACTOR SHALL BE RESPONSIBLE FOR MAINTAINING DRAINAGE AND RUNOFF FLOW DURING STORMS AND PERIODS OF RAINFALL.

11. EROSION CONTROL DEVICES SHOULD BE INSPECTED WEEKLY AND AFTER RAINFALL EVENTS EXCEEDING ONE HALF INCH (½") IN ANY 24–HOUR PERIOD. WHERE AND WHEN REQUIRED, MAINTENANCE AND REPAIRS SHALL BE COMPLETED WITH 24 HOURS OF THE INSPECTION.

12. DENUDED/UNVEGETATED SLOPES SHALL NOT BE LEFT UNATTENDED OR EXPOSED FOR PERIODS IN EXCESS OF 2 WEEKS OR THROUGH THE INACTIVE WINTER SEASON.

13. ALL DISTURBED SLOPES EITHER NEWLY CREATED OR EXPOSED PRIOR TO OCTOBER 15 SHALL BE SEEDED OR PROTECTED BY THAT DATE FOR ANY WORK COMPLETED DURING EACH CONSTRUCTION YEAR.

14. TEMPORARY SURFACE STABILIZATION TREATMENTS SHALL CONSIST OF A HAY, STRAW, OR FIBER MULCH OR PROTECTIVE COVERS SUCH AS FIBER MESH, EROSION CONTROL BLANKETS, OR OTHER MATTING. THEY SHALL BE INCORPORATED INTO THE WORK AS WARRANTED OR AS DIRECTED BY THE ENGINEER. HAY OR STRAW APPLICATIONS SHOULD BE IN THE AMOUNT OF 3,000–4,000 POUNDS PER ACRE (1.9–2.5 POUNDS PER SQUARE YARD). IF NEEDED, TEMPORARY SEEDING (PROVIDED IN ACCORDANCE WITH APPLICABLE SECTIONS OF THE STANDARD SPECIFICATIONS AND EROSION AND SEDIMENT CONTROL GUIDANCE) MAY BE EMPLOYED TO FURTHER MINIMIZE EROSION.

15. TOPSOIL SHALL HAVE A SANDY LOAM TEXTURE, FREE OF SUBSOIL, STONES, ROCKS, ROOTS, BRUSH, REFUSE, CONSTRUCTION DEBRIS AND OTHER DELETERIOUS MATERIALS AND SHALL CONFORM TO SUBSECTION M.18.01 OF THE RIDOT STANDARD SPECIFICATIONS.

16. THE SEEDED MIX SHALL BE INOCULATED WITHIN 24 HOURS, BEFORE MIXING AND PLANTING, WITH APPROPRIATE INOCULUM FOR EACH VARIETY.

17. THE DESIGN MIX SHALL BE COMPRISED OF THE FOLLOWING AND BE APPLIED AT A SEEDING RATE OF 100 POUNDS PER ACRE:

COMPONENT	% BY WEIGHT
RED FESCUE	70
KENTUCKY BLUEGRASS	15
COLONIAL BENTGRASS	5
PERENNIAL RYEGRASS	10

18. THE NORMAL ACCEPTABLE SEASONAL SEEDING DATES ARE APRIL 1 – JUNE 1 AND AUGUST 15 – OCTOBER 15.

19. STABILIZATION OF ONE FORM OR ANOTHER AS DESCRIBED ABOVE SHALL BE ACHIEVED WITHIN 14 DAYS OF FINAL GRADING. PLANTING OF GRASS SHALL BE ACCOMPLISHED BY THE CONTRACTOR AS EARLY AS POSSIBLE UPON COMPLETION OF GRADING AND CONSTRUCTION.

20. THE CONTRACTOR MUST REPAIR AND OR RESEED ANY AREAS THAT DO NOT DEVELOP WITHIN THE PERIOD OF ONE (1) CALENDAR YEAR AND SHALL DO SO AT NO ADDITIONAL EXPENSE TO THE OWNER.

21. ALL DISTURBED AREAS WITHIN GRASS AREA SHALL BE RESTORED WITH 6–INCHES OF LOAM AND SEED.

PROJECT
TIBBET'S ATHLETIC FIELDS

TODD A. RAVENELLE
7/9/15
48928
REGISTERED PROFESSIONAL ENGINEER

CLIENT
UNIVERSITY OF RHODE ISLAND

Gordon R. Archibald, Inc.
Civil and Environmental Engineers
Pawtucket, Rhode Island

DRAWING TITLE
LEGEND & NOTES

NO.	DATE	REVISIONS	BY

PROJECT NO.: 1406

DATE: JULY 9, 2015

SCALE: NONE

DRAWN BY: LBD

CHECKED BY: TAR

DRAWING NUMBER
2

SHEET 2 OF 7

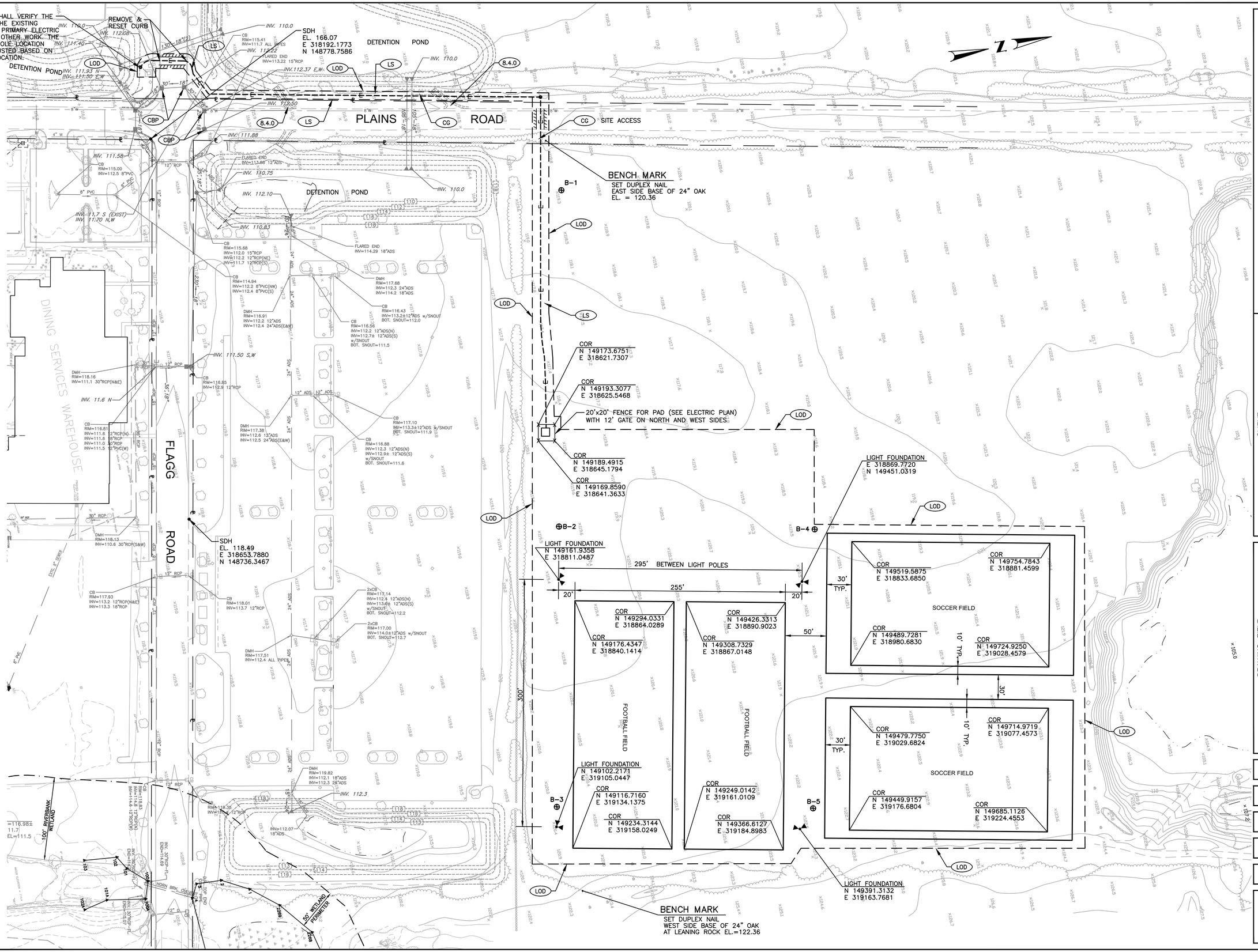

PROJECT

TIBBET'S ATHLETIC FIELDS

TODD A. RAVENELLE
REGISTERED PROFESSIONAL ENGINEER

CLIENT

UNIVERSITY OF RHODE ISLAND

Gordon R. Archibald, Inc.
Civil and Environmental Engineers
Pawtucket, Rhode Island

DRAWING TITLE

FOOTBALL AND SOCCER FIELD SITE PLAN

NO.	DATE	REVISIONS	BY

PROJECT NO.: 1406

DATE: JULY 9, 2015

SCALE: 1"=50'

DRAWN BY: LBD

CHECKED BY: TAR

DRAWING NUMBER

3

SHEET 3 OF 7

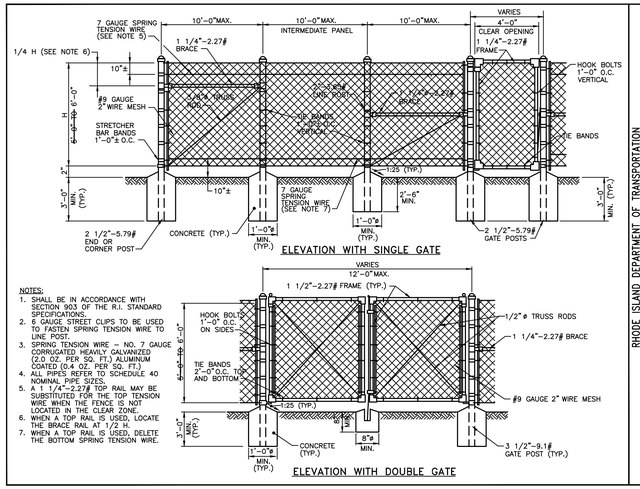

NOTES:

1. SHALL BE IN ACCORDANCE WITH SECTION 903 OF THE R.I. STANDARD SPECIFICATIONS.
2. 6 GAUGE STREET CLIPS TO BE USED TO FASTEN SPRING TENSION WIRE TO LINE POST.
3. SPRING TENSION WIRE – NO. 7 GAUGE CORRUGATED HEAVILY GALVANIZED (2.0 OZ. PER SQ. FT.) ALUMINUM COATED (0.4 OZ. PER SQ. FT.).
4. ALL PIPES: REFER TO SCHEDULE 40 NOMINAL PIPE SIZES.
5. A 1 1/4"-2.27# TOP RAIL MAY BE SUBSTITUTED FOR THE TOP TENSION WIRE WHEN THE FENCE IS NOT LOCATED IN THE CLEAR ZONE.
6. WHEN A TOP RAIL IS USED, LOCATE THE BRACE RAIL AT 1/2 H.
7. WHEN A TOP RAIL IS USED, DELETE THE BOTTOM SPRING TENSION WIRE.

R.I. STANDARD 31.2.0 (MOD.)

RHODE ISLAND DEPARTMENT OF TRANSPORTATION

CHAIN LINK FENCE 5'-0" TO 6'-0"

JUNE 15, 1998

REVISIONS		
NO.	BY	DATE
1	S.P.	10/07/05
2	S.P.	10/07/14

* UTILIZE TOP RAIL, SEE DETAILS

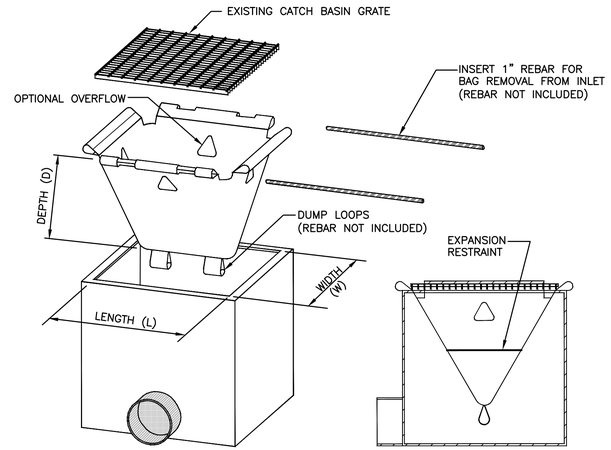

SIZE = L" X W" X D"

CATCH BASIN INLET PROTECTION

NOT TO SCALE

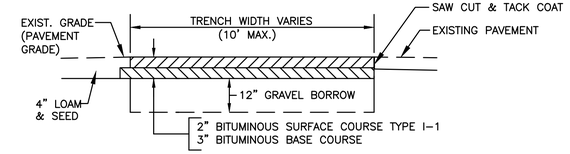

PERMANENT PAVEMENT STRUCTURE

NOT TO SCALE

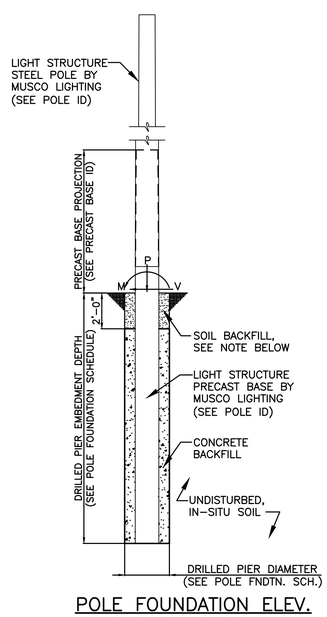

POLE FOUNDATION ELEV.

SCALE: NOT TO SCALE

SOIL BACKFILL NOTE:
THE TOP TWO FEET OF ANNULUS SHALL BE BACKFILLED WITH SOIL, WITH A CLASSIFICATION OF CLASS 5 (TABLE 1806.2) OR BETTER. COMPACTION, 95% FOR COHESIVE SOIL AND 98% FOR A COHESIONLESS SOIL BASED UPON STANDARD PROCTOR TESTING (ASTM D698).

POLE FOUNDATION SCHEDULE

POLE DESIGNATION	FORCES			DRILLED PIER		
	MOMENT (M) FT-LBS	SHEAR (V) LBS	VERTICAL (P) LBS (1.)	DIAMETER INCHES	EMBEDMENT DEPTH	CONCRETE BACKFILL YD^3 (2.)
P2	123,383	2,700	3,132	36	16'-0"	2.8
P3	102,824	2,385	2,862	36	16'-0"	2.8
P4	137,319	2,891	3,402	36	16'-0"	2.8
P5	176,921	3,600	4,341	36	18'-0"	2.9

1. ASD LOAD COMBINATION D+0.6W
   VERTICAL FORCE IS WEIGHT OF DRESSED POLE (DOES NOT INCLUDE PRECAST BASE WEIGHT).
2. MINIMUM CONCRETE BACKFILL VOLUME, SITE CONDITIONS MAY REQUIRE ADDITIONAL BACKFILL.
3. POTENTIAL FOR ENCOUNTERING ROCK BEFORE REACHING EMBEDMENT DEPTH. ROCK AUGERING EQUIPMENT MAY BE REQUIRED.

PRECAST BASE IDENTIFICATION

PRECAST BASE TYPE	PRECAST BASE WEIGHT	PRECAST BASE LENGTH	PROJECTION ABOVE GRADE	STANDARD EMBEDMENT	OUTSIDE DIAMETER
5B	4,580 LBS	23'-11"	7'-11"	16'-0"	18.25"
6B	6,930 LBS	26'-1"	8'-1"	18'-0"	20.56"

POLE IDENTIFICATION

POLE DESIGNATION	POLE TYPE	PRECAST BASE TYPE	FIXTURE CONFIGURATION (FIX. PER XARM)	FIXTURE AND ACCESSORIES EPA (FT^2)
P2	LSS70D	5B	9 (5+4)	22.5
P3	LSS70D	5B	6 (6)	15.0
P4	LSS70D	5B	12 (6) / (6)	26.4
P5	LSS70E	6B	18 (5+4) / (5+4)	37.8

DESIGN NOTES

DESIGN PARAMETERS:
WIND: VULT=140 MPH, VASD=108 MPH (EXPOSUR C, RISK CATEGORY II) PER INTERNATIONAL BUILDING CODE, 2012 EDITION (ASCE 7-10). DESIGN WIND PARAMETERS ARE NOTED, ACTUAL EXPOSURE MUST BE VERIFIED FOR THE SITE BY THE PROPER GOVERNING OFFICIAL.

GEOTECHNICAL PARAMETERS:
ALLOWABLE END BEARING SOIL PRESSURE: 1,500 PSF
ALLOWABLE LATERAL SOIL BEARING PRESSURE: 0 PSF/FT (GRADE TO -2'-0"); VARIES, SEE SOIL BORING LOGS (BELOW -2'-0")
IN ACCORDANCE WITH THE 2012 EDITION OF THE INTERNATIONAL BUILDING CODE, CHAPTER 18.

DESIGN SOIL PARAMETERS ARE AS NOTED. ACTUAL ALLOWABLE SOIL PARAMETERS MUST BE VERIFIED ON SITE. REFERENCE SOIL BORING LOGS, PROJECT NO. 12080, PREPARED BY GEOLOGIC – EARTH EXPLORATION, INC.; NORFOLK, MASS.

A GEOTECHNICAL ENGINEER OR REPRESENTATIVE OF IS RECOMMENDED (NOT REQUIRED) TO BE AVAILABLE AT THE TIME OF THE FOUNDATION INSTALLATION TO VERIFY THE SOIL DESIGN PARAMETERS AND TO PROVIDE ASSISTANCE IF ANY PROBLEMS ARISE IN FOUNDATION INSTALLATION.

ENCOUNTERING SOIL FORMATIONS THAT WILL REQUIRE SPECIAL DESIGN CONSIDERATIONS OR EXCAVATION PROCEDURES MAY OCCUR. POLE FOUNDATIONS WILL NEED TO BE ANALYZED ACCORDING TO THE SOIL CONDITIONS THAT EXIST. IF ANY DISCREPANCIES OR INCONSISTENCIES ARISE, NOTIFY THE ENGINEER OF SUCH DISCREPANCIES. FOUNDATIONS WILL THEN BE REVISED ACCORDINGLY. REVISIONS WILL BE ANALYZED PER RECOMMENDATIONS DIRECTED BY A REGISTERED ENGINEER.

ALL EXCAVATIONS MUST BE FREE OF LOOSE SOIL AND DEBRIS PRIOR TO FOUNDATION INSTALLATION AND CONCRETE BACKFILL PLACEMENT. TEMPORARY CASINGS OR DRILLERS SLURRY MAY BE USED TO STABILIZE THE EXCAVATION DURING INSTALLATION. CASINGS MUST BE REMOVED DURING CONCRETE BACKFILL PLACEMENT. CONCRETE BACKFILL MUST BE PLACED WITH A TREMIE WHEN SLURRY OR WATER IS PRESENT WITHIN THE EXCAVATION OR WHEN THE FREE DROP EXCEEDS 6'-0".

CONTRACTOR MUST BE FAMILIAR WITH THE COMPLETE SOIL INVESTIGATION REPORT AND BORINGS, AND CONTACT THE GEOTECHNICAL FIRM (IF NECESSARY) TO UNDERSTAND THE SOIL CONDITIONS AND THE POSSIBILITY OF GROUND WATER PUMPING AND EXCAVATION STABILIZATION OR BRACING DURING PRECAST BASE INSTALLATION AND PLACEMENT OF CONCRETE BACKFILL.

CONCRETE:
CONCRETE SHALL BE AIR-ENTRAINED AND HAVE A MINIMUM COMPRESSIVE DESIGN STRENGTH AT 28 DAYS OF 3,000 PSI. 3,000 PSI CONCRETE SPECIFIED FOR EARLY POLE ERECTION, ACTUAL REQUIRED MINIMUM ALLOWABLE CONCRETE STRENGTH IS 1,000 PSI. ALL PIERS AND CONCRETE BACKFILL MUST BEAR ON AND AGAINST FIRM UNDISTURBED SOIL.

GENERAL NOTES:
FIXTURES MUST BE LOCATED TO MAINTAIN 10'-0" MINIMUM HORIZONTAL CLEARANCE FROM ANY OBSTRUCTION. ENGINEER MUST BE NOTIFIED IF FOUNDATIONS ARE NEAR ANY RETAINING WALLS OR WITHIN/NEAR ANY SLOPES.STEEPER THAN 3H – 1V. POLES, FIXTURES, PRECAST BASES, ELECTRICAL ITEMS AND INSTALLATION PER MUSCO LIGHTING.

THE GROUNDWATER TABLE SHALL BE ASSUMED AT 6' BELOW EXISTING GRADE.

PROJECT
TIBBET'S ATHLETIC FIELDS

TODD A. BAVENELLE
No. 5928
REGISTERED PROFESSIONAL ENGINEER

CLIENT
UNIVERSITY OF RHODE ISLAND

Gordon R. Archibald, Inc.
Civil and Environmental Engineers
Pawtucket, Rhode Island

DRAWING TITLE
DETAIL SHEET 1

NO.	DATE	REVISIONS	BY

PROJECT NO.: 1406

DATE: JULY 9, 2015

SCALE: AS NOTED

DRAWN BY: LBD

CHECKED BY: TAR

DRAWING NUMBER
4

SHEET 4 OF 7

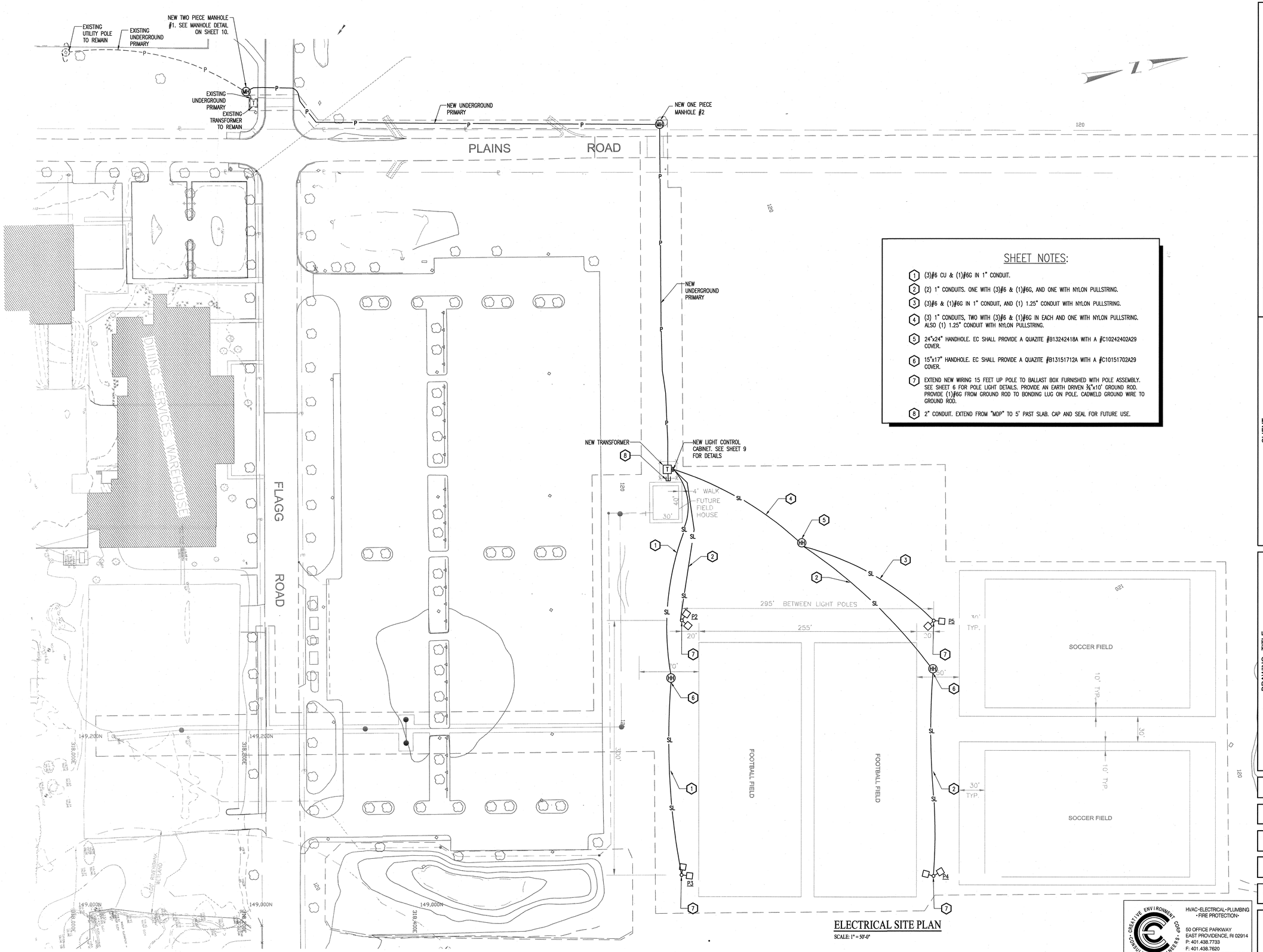

SHEET NOTES:

1. (3)#6 CU & (1)#6G IN 1" CONDUIT.
2. (2) 1" CONDUITS. ONE WITH (3)#6 & (1)#6G, AND ONE WITH NYLON PULLSTRING.
3. (3)#6 & (1)#6G IN 1" CONDUIT, AND (1) 1.25" CONDUIT WITH NYLON PULLSTRING.
4. (3) 1" CONDUITS, TWO WITH (3)#6 & (1)#6G IN EACH AND ONE WITH NYLON PULLSTRING. ALSO (1) 1.25" CONDUIT WITH NYLON PULLSTRING.
5. 24"x24" HANDHOLE. EC SHALL PROVIDE A QUAZITE #B13242418A WITH A #C10242402A29 COVER.
6. 15"x17" HANDHOLE. EC SHALL PROVIDE A QUAZITE #B13151712A WITH A #C10151702A29 COVER.
7. EXTEND NEW WIRING 15 FEET UP POLE TO BALLAST BOX FURNISHED WITH POLE ASSEMBLY. SEE SHEET 6 FOR POLE LIGHT DETAILS. PROVIDE AN EARTH DRIVEN ¾"x10' GROUND ROD. PROVIDE (1)#6G FROM GROUND ROD TO BONDING LUG ON POLE. CADWELD GROUND WIRE TO GROUND ROD.
8. 2" CONDUIT. EXTEND FROM "MDP" TO 5' PAST SLAB. CAP AND SEAL FOR FUTURE USE.

ELECTRICAL SITE PLAN

SCALE: 1" = 50'-0"

PROJECT
TIBBETS FIELD
ATHLETIC FIELDS

STEVEN COSTA
7-10-15
No. 7813
REGISTERED PROFESSIONAL ENGINEER
ELECTRICAL

CLIENT
UNIVERSITY OF RHODE ISLAND

Gordon R. Archibald, Inc.
Civil and Environmental Engineers
Pawtucket, Rhode Island

DRAWING TITLE
FOOTBALL AND SOCCER FIELD
ELECTRICAL SITE PLANS

NO.	DATE	REVISIONS	BY

PROJECT NO.: 1406

DATE: JULY 9, 2015

SCALE: AS NOTED

DRAWN BY: WMS

CHECKED BY: SC

DRAWING NUMBER
5

SHEET 5 OF 7

CREATIVE ENVIRONMENT CORP. CONSULTING ENGINEERS
HVAC•ELECTRICAL•PLUMBING •FIRE PROTECTION•
50 OFFICE PARKWAY
EAST PROVIDENCE, RI 02914
P: 401.438.7733
F: 401.438.7620
WWW.CEC-ENGINEERING.COM

CEC# 201226

SHEET NOTES:

1. (2) CONCRETE ENCASED 4" CONDUITS. ONE WITH (3)#2 5kV CABLE & (1)#6G, AND ONE WITH NYLON PULLSTRING.
2. NEW CONCRETE MANHOLE. PROVIDE SERVICE LOOP AROUND MANHOLE. SEE MANHOLE DETAIL ON SHEET 10.
3. EXISTING (2) CONCRETE ENCASED 5" CONDUITS. ONE WITH (3)#2 5kV CABLE & (1)#6G, AND ONE WITH NYLON PULLSTRING.
4. NEW CONCRETE MANHOLE. INTERCEPT EXISTING CONCRETE ENCASED DUCTBANK. REMOVE EXISTING CABLE SERVING EXISTING TRANSFORMER AND PULL BACK TO NEW MANHOLE. PROVIDE NEW (3)#2 5kV CABLE & (1)#6G, IN EXISTING CONDUIT DUCTBANK SERVING THE EXISTING TRANSFORMER. PROVIDE NEW 200 AMP LOADBREAK ELBOWS AT BOTH ENDS. TERMINATE ELBOWS TO EXISTING WELLS ON EXISTING TRANSFORMER. PROVIDE NEW 3 POSITION RACKS IN NEW MANHOLE. SEE NEW MANHOLE DETAIL #1 ON SHEET 10 FOR TERMINATION DETAILS, AND MANHOLE DETAIL ON SHEET 10 FOR ADDITIONAL DETAILS.
5. TWO 4" CONDUITS WITH (4) 350KCMIL IN EACH.
6. NEW 4160/480-277 VOLT 500KVA PAD MOUNTED TRANSFORMER. SEE SPECIFICATIONS FOR DETAILS.
7. SEE MAIN SERVICE GROUNDING SCHEMATIC ON THIS SHEET FOR DETAILS.
8. SEE TRANSFORMER PAD DETAIL ON THIS SHEET FOR GROUNDING DETAILS.
9. (4)#1 & (1)#8G IN 1.5" CONDUIT.
10. (12)#6 & (1)#6G IN 2" CONDUIT.
11. EC SHALL PROVIDE A 480/120 VOLT SINGLE PHASE 2KVA TRANSFORMER. PROVIDE ALL NECESSARY HARDWARE AND ALL FINAL TERMINATIONS.
12. SURGE PROTECTIVE DEVICE FURNISHED BY POLE LIGHTING MANUFACTURER AND INSTALLED AND WIRED BY THE EC. PROVIDE ALL NECESSARY HARDWARE AND ALL FINAL TERMINATIONS.
13. FOR SURGE PROTECTOR DEVICE MONITORING. PROVIDE (2)#14 & (1)#14G IN ½" CONDUIT. EXTEND FROM LIGHTING CONTROL PANEL TO SURGE PROTECTOR. PROVIDE ALL NECESSARY HARDWARE AND ALL FINAL TERMINATIONS.
14. ¾" CONDUIT. ROUTE LEADS FROM SURGE PROTECTOR TO PANEL "A".
15. (2)#12 & (1)#12G IN ½" CONDUIT.
16. 2" CONDUIT. EXTEND 5FT. PAST SLAB. CAP AND SEAL FOR FUTURE USE.
17. 6"x6"x48" LONG WEATHERPROOF TROUGH WITH HINGED LOCKABLE COVER.
18. PLYWOOD BACKBOARD. SEE RACK DETAIL ON THIS SHEET FOR DETAILS.
19. EC SHALL PROVIDE A NEW 1/4"X4"X1' WALL MOUNTED GROUND BUSS. PROVIDE A 3/4"X10' EARTH DRIVEN GROUND ROD. EXTEND (1)#6 CU FROM GROUND ROD TO NEW GROUND BUSS. BOND ALL GROUND WIRES TO NEW GROUND BUSS.
20. EC SHALL PROVIDE A NEW METER SOCKET, DEMAND METER, AND ALL ASSOCIATED CT'S AND WIRING. ALL SHALL CONFORM TO NATIONAL GRID STANDARDS.
21. EC SHALL PROVIDE NEW CONCRETE PAD. SEE CONCRETE PAD DETAIL ON THIS SHEET.
22. 3/0 CU GROUND. BOND TO UNISTRUT AND CONCRETE PAD GROUND RING.

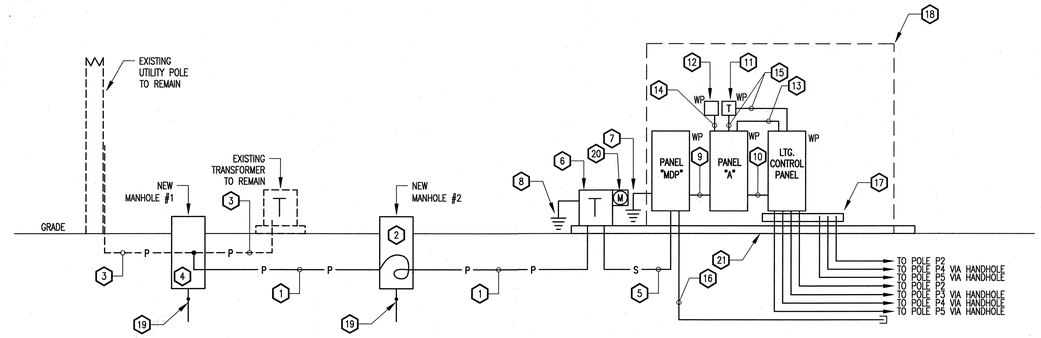

POWER DISTRIBUTION DETAIL

NTS

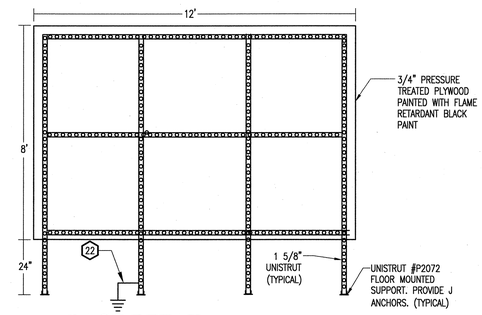

RACK DETAIL

NTS

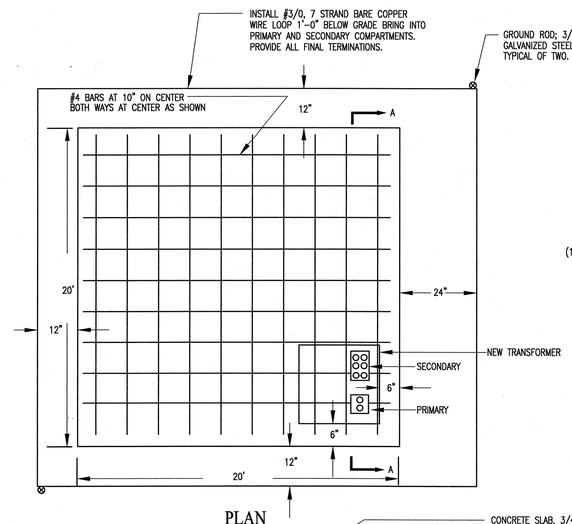

PLAN

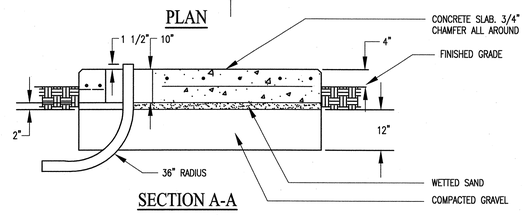

SECTION A-A

CONCRETE PAD DETAIL

NTS

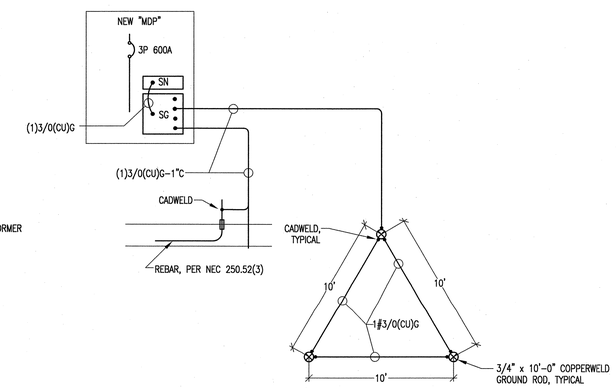

MAIN SERVICE GROUNDING SCHEMATIC

NTS

PROJECT
TIBBETS FIELD ATHLETIC FIELDS

STEVEN COSTA
7-10-15
No. 7813
REGISTERED PROFESSIONAL ENGINEER ELECTRICAL

CLIENT
UNIVERSITY OF RHODE ISLAND

Gordon R. Archibald, Inc.
Civil and Environmental Engineers
Pawtucket, Rhode Island

DRAWING TITLE
FOOTBALL AND SOCCER FIELD ELECTRICAL DETAILS

NO.	DATE	REVISIONS	BY

PROJECT NO.: 1406

DATE: JULY 9, 2015

SCALE: AS NOTED

DRAWN BY: WMS

CHECKED BY: SC

DRAWING NUMBER
6

SHEET 6 OF 7

CREATIVE ENVIRONMENT CORP. • CONSULTING ENGINEERS •
HVAC • ELECTRICAL • PLUMBING • FIRE PROTECTION •
50 OFFICE PARKWAY
EAST PROVIDENCE, RI 02914
P: 401.438.7733
F: 401.438.7620
WWW.CEC-ENGINEERING.COM

CEC# 201226

ELECTRICAL SYMBOL LEGEND

HH	HANDHOLE
M	ELECTRIC METER SOCKET AND DEMAND METER
T	TRANSFORMER
MH	MANHOLE
—P—	PRIMARY ELECTRIC POWER
—S—	SECONDARY ELECTRIC POWER
—SL—	SITE LIGHTING WIRING, 24" BELOW GRADE
	UTILITY POLE
	POLE MOUNTED LIGHTING AND POLE BASE PROVIDED BY OTHERS.

ELECTRICAL SYMBOL LEGEND

A	AMPS
AFF	ABOVE FINISHED FLOOR
C	CONDUIT
CU	COPPER
G	GROUND
kW	KILOWATT
NTS	NOT TO SCALE
P	POLE
V	VOLT
W	WATT

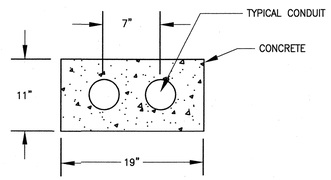

PRIMARY DUCT BANK DETAIL

NTS

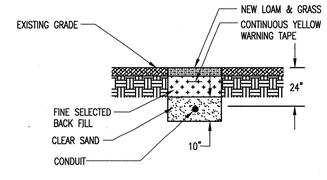

TRENCH DETAIL

NTS

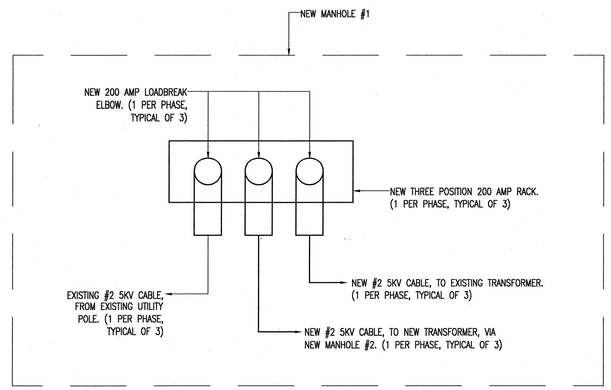

NEW MANHOLE #1 DETAIL

NTS

PANEL: A — 100 A 480Y/277 V 3PH 4W 60HZ

22,000 AIC
CIRCUITS: 18
BUS RATING: 125A
NEMA 3R

MAIN LUG ONLY [X]
MAIN CIRCUIT BREAKER
SURFACE MOUNTED [X]
FLUSH MOUNTED
FLOOR MOUNTED

NOTE	DESCRIPTION
A	VIA LIGHTING CONTACTOR
G	GFCI - 5mA TRIP
P	GFPE - 30 mA TRIP
S	SHUNT TRIP
L	LOCK ON
IG	ISOLATED GROUND
C	VIA LIGHTING CONTROL PANEL

SHUNT TRIP MAIN
200% RATED NEUTRAL
ISOLATED GROUND
FEED THRU LUGS
100% RATED MAIN BREAKER
GROUND FAULT MAIN C.B.

CKT No.	Load Type	LOAD DESCRIPTION	Note	WIRE SIZE	LOAD kVA	CIRCUIT BREAKER 3/0/3	CIRCUIT BREAKER 2/0/2	CKT No.	Load Type	LOAD DESCRIPTION	Note	WIRE SIZE	LOAD kVA	CIRCUIT BREAKER 3/0/3	CIRCUIT BREAKER 2/0/2
1								2							
3	L	POLE P2	A	6	12.3	1		4	L	POLE P4	A	6	12.3	1	
5								6							
7								8							
9	L	POLE P3	A	6	12.3	1		10	L	POLE P5	A	6	12.3	1	
11								12							
13	M	LIGHTING CONTROLS VIA XFRMR		12	0.3			14		SPACE					
15								16		SPACE					
17		SPACE						18		SPACE					

				Connected Load	49.5	KVA
R	Receptacle Load	0.0	KVA	Noncontinuous	0.0	KVA
L	Lighting Load	49.2	KVA	Continuous	61.5	KVA
M	Mechanical and Power Load	0.3	KVA	Noncontinuous	0.3	KVA
				TOTAL LOAD	61.8	KVA

CIRCUIT BREAKER SIZE	3/0/3	2/0/2	0	0	0	0	0	0
CIRCUIT BREAKER COUNT	4	0	0	0	0	0	0	0

AMPERAGE: 74 AMP

PANEL: MDP — 600 A 480Y/277 V 3PH 4W 60HZ

22,000 AIC
BUS RATING: 600A
SE RATED
NEMA 3R

MAIN LUG ONLY
MAIN CIRCUIT BREAKER [X]
SURFACE MOUNTED [X]
FLUSH MOUNTED
FLOOR MOUNTED

NOTE	DESCRIPTION
A	AFCI
G	GFCI - 5mA TRIP
P	GFPE - 30 mA TRIP
S	SHUNT TRIP
L	LOCK ON
IG	ISOLATED GROUND
C	VIA LIGHTING CONTROL PANEL

SHUNT TRIP MAIN
200% RATED NEUTRAL
ISOLATED GROUND
FEED THRU LUGS
100% RATED MAIN BREAKER
GROUND FAULT MAIN C.B.

CKT No.	Load Type	LOAD DESCRIPTION	Note	WIRE SIZE	LOAD kVA	CIRCUIT BREAKER 100/3	CIRCUIT BREAKER 3/0/3	CKT No.	Load Type	LOAD DESCRIPTION	Note	WIRE SIZE	LOAD kVA	CIRCUIT BREAKER 100/3	CIRCUIT BREAKER 3/0/3
1								2							
3	M	PANEL A		1	61.5	1		4		225 AMP PROVISION					
5								6							
7								8							
9		400 AMP PROVISION						10		125 AMP PROVISION					
11								12							
13								14							
15		SERVICE SURGE PROTECTION				1		16		125 AMP PROVISION					
17								18							

				Connected Load	61.5	KVA
R	Receptacle Load	0.0	KVA	Noncontinuous	0.0	KVA
L	Lighting Load	0.0	KVA	Continuous	0.0	KVA
M	Mechanical and Power Load	61.5	KVA	Noncontinuous	61.5	KVA
				TOTAL LOAD	61.5	KVA

CIRCUIT BREAKER SIZE	100/3	3/0/3	0	0	0	0	0	0
CIRCUIT BREAKER COUNT	1	1	0	0	0	0	0	0

AMPERAGE: 74 AMP

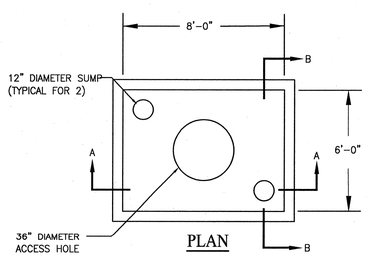

PLAN

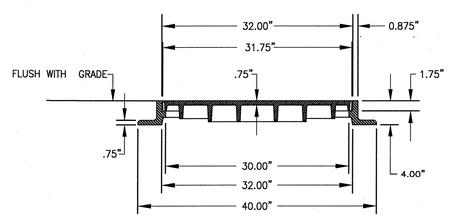

SECTION "C-C"

MANHOLE FRAME AND COVER

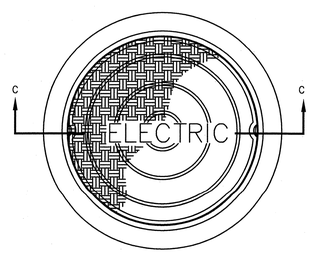

PLAN

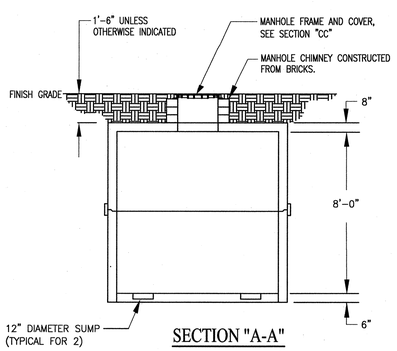

SECTION "A-A"

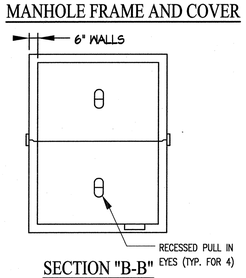

SECTION "B-B"

TWO PIECE MANHOLE NOTES:

1. PROVIDE FOR NUMBER OF CONDUIT ENTRIES AS SHOWN ON DRAWING.
2. MANHOLE SHALL BE CONSTRUCTED USING ASTM-A-70, GRADE 60 STEEL REINFORCING WITH A MINIMUM OF 1" CONCRETE COVERING.
3. CONSTRUCTION JOINT SHALL BE SEALED WITH 1" DIAMETER BUTYL RUBBER OR EQUIVALENT.
4. PROVIDE ALL ACCESSORIES AND COMPLY WITH "WORK IN MANHOLES" SECTION OF SPECIFICATION.
5. FRAME AND COVER SHALL BE LeBARON #LA324 OR APPROVED EQUAL. COVER SHALL HAVE "ELECTRIC" LETTERING.

TWO PIECE MANHOLE #1 DETAIL (MANHOLE #2 SIMILAR BUT ONE PIECE)

NTS

PROJECT
TIBBETS FIELD ATHLETIC FIELDS

STEVEN COSTA 7-15-15 No. 7813 REGISTERED PROFESSIONAL ENGINEER ELECTRICAL

CLIENT
UNIVERSITY OF RHODE ISLAND

Gordon R. Archibald, Inc.
Civil and Environmental Engineers
Pawtucket, Rhode Island

DRAWING TITLE
FOOTBALL AND SOCCER FIELD LEGEND AND PANEL SCHEDULE

NO.	DATE	REVISIONS	BY

PROJECT NO.: 1406

DATE: JULY 9, 2015

SCALE: AS NOTED

DRAWN BY: WMS

CHECKED BY: SC

DRAWING NUMBER
7

SHEET 7 OF 7

CREATIVE ENVIRONMENT CORP. CONSULTING ENGINEERS
HVAC•ELECTRICAL•PLUMBING •FIRE PROTECTION•
50 OFFICE PARKWAY
EAST PROVIDENCE, RI 02914
P: 401.438.7733
F: 401.438.7620
WWW.CEC-ENGINEERING.COM

CEC# 201226