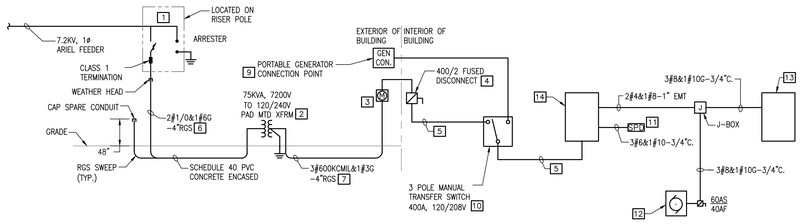

KEYED NOTES

1. PROVIDE FUSED CUTOUT/ARRESTER COMBINATION EQUAL TO ABB TYPE ICX, 15KV RATED WITH 8.4KV ARRESTER. PROVIDE 100A FUSE HOLDER AND S&C TYPE XS (OR EQUAL), 30A FUSE, ASSEMBLY RATED FOR 20KAIC.
2. PROVIDE SINGLE PHASE, RESIDENTIAL STYLE, OIL FILLED, PAD MOUNTED TRANSFORMER EQUAL TO GE MINI-PAD (ANSI TYPE II). 7200V TO 120/240V. PROVIDE PRE-FABRICATED CONCRETE PAD AS PER DETAIL #10, DRAWING E7.1. EXACT DIMENSIONS TO BE COORDINATED BY THE E.C. BASED ON PARTICULAR MAKE AND MODEL OF THE APPROVED TRANSFORMER.
3. PROVIDE METER SOCKET AND METER EQUAL TO GE I-120
4. PROVIDE FUSING EQUAL TO SIZE OF EXISTING PANEL
5. PROVIDE CONDUIT AND WIRE EQUAL TO THE MAXIMUM SIZE OF EXISTING PANEL. ASSUME FOR BIDDING PURPOSES, 400A AND THEREFORE 3#600KCMIL&1#3G-4"C.
6. PROVIDE 15KV, SHIELDED, 133% EPR INSULATION, 105°C, SUN RESISTANT CABLE EQUAL TO OKONITE OKOGUARD OKOLON.
7. DIRECT BURIED RIGID GALVANIZED STEEL.
8. NEUTRAL TO GROUND BONDING SHALL BE PROVIDED AT THE TRANSFORMER. ASSURE THAT THERE IS NO NEUTRAL TO GROUND CONNECTION AT THIS PANEL.
9. TEMP GENERATOR CONNECTION POINT SHALL BE EQUAL TO TRYSTAR COMMERCIAL GRADE GENERATOR DOCKING STATION, 400A, POWER COATED ALUMINUM. MOUNT TO EXTERIOR OF BUILDING. PROVIDE UNISTRUT SUPPORT AND OTHER APPURTENANCES AS REQUIRED FOR A COMPLETE OPERATIONAL INSTALLATION.
10. MANUAL TRANSFER SWITCH SHALL BE EQUAL TO BOLTSWITCH ENCLOSED SERIES T GENEVA MANUAL TRANSFER SWITCH, MODEL ET426-6N (SUITABLE FOR 240V)
11. PROVIDE 60/2 CIRCUIT BREAKER TO MATCH EXISTING. PROVIDE NIPPLE TO SURGE PROTECTIVE DEVICE (SPD). SPD SHALL BE EQUAL TO ERICO SES 200.
12. PROVIDE PHASE CONVERTER FOR 240, 1ø TO 240, 3ø POWER RATED FOR 15HP, WITH LARGEST MOTOR NO GRATER THEN 5HP. PROVIDE KAY INDUSTRIES #MA-2 OR EQUAL BY RONK INDUSTRIES.
13. 240V, 3 PH, 100A 18 POLE, 40A MAIN CIRCUIT BREAKER, AL BUS, 10KAIC WITH THE FOLLOWING CIRCUIT BREAKERS:
    - THREE 20A-3P
14. 400A, 120/240V SINGLE PHASE 30 POLE PANEL WITH 400A-2P MCB, ALUMINUM BUS, 10KAIC AND THE FOLLOWING BRANCH CIRCUIT BREAKERS:
    - ONE 40A-2P
    - TWENTY EIGHT 20A-1P

1 POWER RISER DIAGRAM
SCALE: NONE

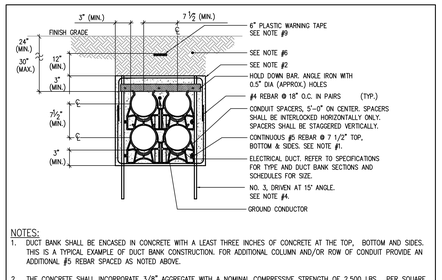

NOTES:

1. DUCT BANK SHALL BE ENCASED IN CONCRETE WITH A LEAST THREE INCHES OF CONCRETE AT THE TOP, BOTTOM AND SIDES. THIS IS A TYPICAL EXAMPLE OF DUCT BANK CONSTRUCTION. FOR ADDITIONAL COLUMN AND/OR ROW OF CONDUIT PROVIDE AN ADDITIONAL #5 REBAR SPACED AS NOTED ABOVE.
2. THE CONCRETE SHALL INCORPORATE 3/8" AGGREGATE WITH A NOMINAL COMPRESSIVE STRENGTH OF 2,500 LBS. PER SQUARE INCH. THE SLUMP SHALL BE AT THE UPPER END OF THE RANGE, PREFERABLY 7 TO 8 INCHES. IT SHOULD HAVE JUST ENOUGH SLUMP TO FLOW TO THE BOTTOM OF THE DUCT BANK AND YET NOT BE SO WET AS TO CAUSE THE CONDUITS TO FLOAT EXCESSIVELY. COORDINATE EXACT REQUIREMENTS WITH CIVIL ENGINEER.
3. WHEN PLACING CONCRETE AROUND CONDUITS ADJUST THE DELIVERY CHUTE SO THE FALL OF THE CONCRETE INTO THE TRENCH IS MINIMAL. POUR THE CONCRETE SLOWLY AND DISTRIBUTE IT EVENLY SO AS NOT TO DISLODGE THE SPACERS.
4. THE REBAR STAKES AND HOLD DOWN BARS ARE REQUIRED TO PREVENT THE FLOTATION OF THE DUCT BANK. FLOTATION IS CAUSED BY DUCT BUOYANCY AND CHURNING OF THE CONCRETE DURING THE POUR. FOUR SETS OF REBAR STAKES AND HOLD DOWN BARS SHOULD BE USED PER 20 FEET OF DUCT BANK. THE 3" EXTENSION OF THE REBAR ABOVE THE DUCTS IS TO BE USED AS A CONCRETE GAUGE.
5. CONCRETE ENVELOPE SHALL BE POURED IN FORM. DO NOT USE THE SIDES OF THE TRENCH TO FORM THE VERTICAL WALLS, UNLESS APPROVED BY ENGINEER.
6. BACKFILL DUCTS WITH SELECT FILL. BACKFILL TRENCH BANK IN LAYERS AFTER CONCRETE HAS SET.
7. STEEL REINFORCING RODS SHALL BE INTERFACED WITH BUILDING FOUNDATION AND MANHOLE WALLS TO MINIMIZE SHEARING.
8. CONCRETE CONSTRUCTION JOINTS SHALL NOT BE SPACED LESS THAN 40 FEET O.C.
9. PLASTIC WARNING TAPE SHALL BE "EXTRA-STRETCH" 6" WIDE AS MANUFACTURED BY TERRA-TAPE, DIVISION OF REEF INDUSTRIES OR APPROVED EQUAL. COLOR CODE SHALL BE AS FOLLOWS; RED-ELECTRIC, ORANGE- COMMUNICATIONS. IMPRINTED TEXT SHALL IDENTIFY DUCT BANK SERVICE. UTILIZE NON-DETECTABLE TAPE FOR ELECTRIC DUCTS AND METALIZED DETECTABLE TAPE FOR COMMUNICATION DUCTS.
10. PROVIDE GROUND CONNECTION TO MANHOLE COVER.

2 TYPICAL REINFORCED CONCRETE DUCTBANK CONSTRUCTION DETAIL
SCALE: NONE

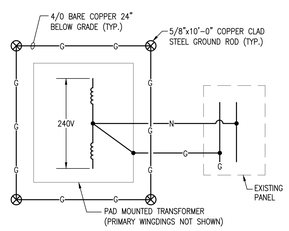

3 GROUNDING DETAIL
SCALE: NONE

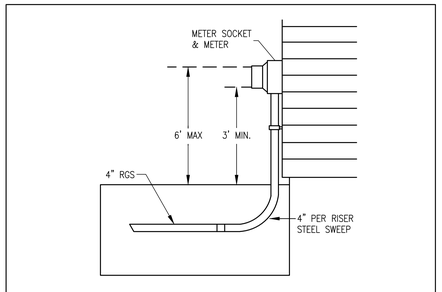

1. PROVIDE SERVICE CONDUCTORS AS INDICATED AND EQUIPMENT EXCEPT WATT-HOUR METER SHALL BE FURNISHED AND INSTALLED BY THE CUSTOMER.
2. WHERE GROUND MOVEMENT DUE TO FROST OR SETTLEMENT IS ANTICIPATED SLACK MUST BE ALLOWED IN CABLES, AND EXPANSION JOINTS OR OTHER MEASURES MUST BE TAKEN TO ALLOW FOR MOVEMENT.
3. PROVIDE INTER SYSTEM BONDING DEVICE IN ACCORDANCE WITH 2008 NEC 250.94 AND GROUNDING OF SERVICE IN ACCORDANCE WITH THE NEC.

4 TYPICAL UNDERGROUND INSTALLATION
SCALE: NONE

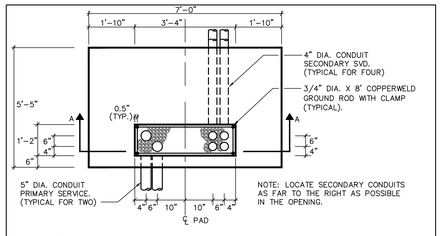

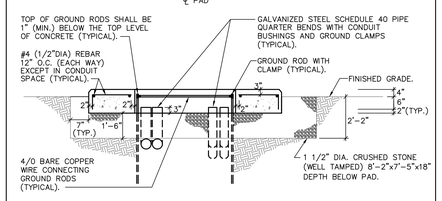

NOTES:

1. REFER TO NSTAR CONSTRUCTION STANDARDS FOR ADDITIONAL INFORMATION.
2. TOP OF PAD SHALL BE SMOOTH, LEVEL AND HAVE 3/4" CHAMFERED TOP EDGES.
3. CONCRETE TO HAVE AN ULTIMATE STRENGTH OF 3,000 PSI AFTER 28 DAYS AND TO BE VIBRATOR COMPACTED.
4. GROUND RODS, BONDING JUMPERS, AND GROUNDING CONNECTORS FOR THIS PAD SHALL BE FURNISHED BY UTILITY COMPANY AND INSTALLED BY THE ELECTRICAL CONTRACTOR. TO OBTAIN THESE MATERIALS, PLEASE CONTACT THE RESPECTIVE UTILITY COMPANY CUSTOMER SERVICE ENGINEER.

6 TYPICAL TRANSFORMER PAD DETAIL
SCALE: NONE

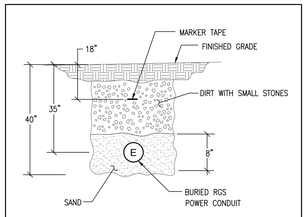

6 UNDERGROUND RACEWAY SECTIONS
SCALE: NONE

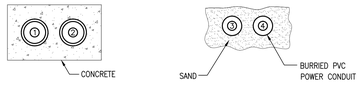

DUCTBANK SECTION A-A

NOTE:
REFER TO DETAIL #2 THIS DRAWING FOR ADDITIONAL INFORMATION.

DIRECT BURRY SECTION A-A

NOTE:
REFER TO DETAIL #6 THIS DRAWING FOR ADDITIONAL INFORMATION.

KEYED NOTES

1. 4" PVC – ACTIVE
2. 4" PVC – SPARE
3. 4" RGS – ACTIVE
4. 4" RGS – SPARE

7 UNDERGROUND RACEWAY SECTIONS
SCALE: NONE

ELECTRICAL LEGEND

GENERAL ABBREVIATIONS

3R	NEMA 3R RATING	HVAC	HEATING, VENTILATION, AIR CONDITIONING CONTRACTOR
4X	NEMA 4X RATING	IEEE	INSTITUTE OF ELECTRICAL AND ELECTRONIC ENGINEERS
A	AMPERES	IG	ISOLATED GROUND
AC	ALTERNATING CURRENT	IMC	INTERMEDIATE METAL CONDUIT
A/C	AIR CONDITIONING	INT	INTERLOCK
ADA	AMERICANS WITH DISABILITIES ACT	°K	DEGREE KELVIN
AFF	ABOVE FINISH FLOOR	KCMIL	THOUSAND CIRCULAR MILS
AFG	ABOVE FINISH GRADE	KVA	KILOVOLTAMPERES
AHJ	AUTHORITY HAVING JURISDICTION	KVAR	KILOVOLTAMPERES REACTIVE
AHU	AIR HANDLING UNIT	KW	KILOWATTS
AIC	AMPERE INTERRUPTING CAPACITY	LFMC	LIQUID TIGHT FLEXIBLE METAL
AL	ALUMINUM	LTG	LIGHTING
ANSI	AMERICAN NATIONAL STANDARDS INSTITUTE	LRA	LOCK ROTOR AMPS
ARCH	ARCHITECT	MC	METAL CLAD CABLE
ATS	AUTOMATIC TRANSFER SWITCH	MCB	MAIN CIRCUIT BREAKER
ATC	AUTOMATIC TEMPERATURE CONTROL	MCC	MOTOR CONTROL CENTER
AWG	AMERICAN WIRE GAUGE	MCP	MOTOR CIRCUIT PROTECTOR
BAS	BUILDING AUTOMATION SYSTEM	MEC	MASSACHUSETTS ELECTRIC CODE
BFG	BELOW FINISH GRADE	MI	MINERAL INSULATED CABLE
BLDG	BUILDING	MISC	MISCELLANEOUS
BMS	BUILDING MANAGEMENT SYSTEM	MLO	MAIN LUGS ONLY
BTU	BRITISH THERMAL UNITS	NC	NORMALLY CLOSED
°C	DEGREE CELSIUS	NEC	NATIONAL ELECTRIC CODE
C	CONDUIT	NEMA	NATIONAL ELECTRICAL MANUFACTURES ASSOCIATION
CAT	CATALOG	NFPA	NATIONAL FIRE PROTECTION ASSOCIATION
CATV	COMMUNITY ANTENNAE TELEVISION	NL	NIGHT LIGHT
CB	CRITICAL BRANCH	NO	NORMALLY OPEN OR NUMBER
C/B	CIRCUIT BREAKER	NTS	NOT TO SCALE
CBM	CERTIFIED BALLASTS MANUFACTURERS	P	POLE
cd	CANDELA RATING	PB	PUSH-BUTTON
CKT	CIRCUIT	PC	PLUMBING CONTRACTOR
CL	CENTERLINE	PNL	PANEL
CLF	CURRENT LIMITING FUSE	POS	POINT OF SALE (CASHIER STATION)
COL	COLUMN	PVC	POLYVINYL CHLORIDE
CPT	CONTROL POWER TRANSFORMER	PWR	POWER
C.T.	CURRENT TRANSFORMER	P.T.	POTENTIAL TRANSFORMER
CU	COPPER	QTY	QUANTITY
dB	DECIBEL	REQ'D	REQUIRED
DC	DIRECT CURRENT	RMC	RIGID METAL CONDUIT
DIA	DIAMETER	RMS	ROOT MEAN SQUARED
DWG	DRAWING	RNC	RIGID NONMETALLIC CONDUIT
E	WIRED ON EMERGENCY CIRCUIT	RTS	REMOTE TEST STATION
EB	EQUIPMENT BRANCH	RTU	ROOF TOP UNIT
EC	ELECTRICAL CONTRACTOR	SP	SPARE
EF	EXHAUST FAN	SPD	SURGE PROTECTIVE DEVICE
EL	ELEVATION	ST	SHUNT TRIP
ELEV	ELEVATOR	SW	SWITCH
EM	EMERGENCY	SYM	SYMMETRICAL
EMT	ELECTRICAL METALLIC TUBING	TEL	TELEPHONE
EP	EMERGENCY POWER	TMCB	THERMAL MAGNETIC CIRCUIT BREAKER
EPO	EMERGENCY POWER OFF	UG	UNDERGROUND OR UNDER GRADE
EWC	ELECTRIC WATER COOLER	UL	UNDERWRITERS LABORATORIES
°F	DEGREE FAHRENHEIT	V	VOLT
F	FUSE	VA	VOLTAMPERE
FA	FIRE ALARM	VT	VOLTAGE TRANSFORMER
FAA	FIRE ALARM ANNUNCIATOR	W	WIRE (OR WATT)
FLA	FULL LOAD AMPERES	WH	WATER HEATER
FMC	FLEXIBLE METAL CONDUIT	WP	WEATHERPROOF
FT	FEET	XFMR	TRANSFORMER
GC	GENERAL CONTRACTOR	ø	PHASE
GFCI	GROUND-FAULT CIRCUIT INTERRUPTER		
GND,G	GROUND OR GROUNDING		
GRC	GALVANIZED RIGID METALLIC CONDUIT		
HOA	HAND, OFF, AUTOMATIC SWITCH		

ONE-LINE DIAGRAM

- SPLICE
- RACEWAY BREAK SYMBOL, INDICATES CONTINUATION OF RACEWAY AND WIRING
- RACEWAY CAP SYMBOL, INDICATES CAPPED AND SEALED RACEWAY
- DELTA
- WYE
- THERMAL CIRCUIT OVERLOAD
- CONTACT, NORMALLY OPEN
- CONTACT, NORMALLY CLOSED
- 150KVA — POWER TRANSFORMER, SIZE AS INDICATED
- (2) CPT — VOLTAGE TRANSFORMER; "PT" – DENOTES VOLTAGE TRANSFORMER; "CT" – DENOTES CURRENT TRANSFORMER; (2) – DENOTES QUANTITY
- 3 — CURRENT TRANSFORMER – '3' DENOTES QUANTITY
- CIRCUIT BREAKER
- 200 — FUSE – '200' DENOTES SIZE
- GF — GROUND FAULT SENSOR AND RELAY
- M — METER (MICROPROCESSOR BASED)
- AS — AMMETER SWITCH
- AM — AMMETER
- VS — VOLTMETER SWITCH
- M — METER
- VM — VOLTMETER
- KWH — KILOWATT-HOUR METER
- 400AS 300AF — SWITCH AND FUSE; "400AS" – INDICATES SWITCH RATING; "300AS – INDICATES FUSE RATING
- SYSTEM GROUND OR EQUIPMENT GROUND
- LIGHTNING ARRESTER AND GROUNDING
- K — KIRK KEY
- SPD — SURGE PROTECTIVE DEVICE (TRANSIENT VOLTAGE SURGE SUPPRESSOR)

EXISTING EQUIPMENT

- DOTTED DENOTES EXISTING EQUIPMENT TO BE REMOVED UNLESS OTHERWISE NOTED
- XM — EXISTING EQUIPMENT TO REMAIN
- XR — EXISTING EQUIPMENT TO BE REMOVED & RELOCATED
- RX — NEW LOCATION OF RELOCATED EXISTING EQUIPMENT
- XN — EXISTING EQUIPMENT TO BE REMOVED & REPLACED WITH NEW, AS SPECIFIED
- X — EXISTING EQUIPMENT TO BE REMOVED

DISTRIBUTION EQUIPMENT

- A — 120/208V, 3ø, 4W PANEL. "A" – REFER TO LEGEND OF PANEL KEY SCHEDULE ON FLOOR PLANS
- 277/480V, 3ø, 4W PANEL.
- LIM — LINE ISOLATION MODULE
- ATS — AUTOMATIC TRANSFER SWITCH
- TS — TRANSFORMER, REFER TO DRY TYPE TRANSFORMER SCHEDULE FOR ADDITIONAL INFORMATION
- M — METER WITH METER SOCKET, PROVIDE SOCKET AS REQUIRED BY ELECTRIC UTILITY COMPANY
- MCC — MOTOR CONTROL CENTER
- CB — ENCLOSED CIRCUIT BREAKER
- CT — CURRENT TRANSFORMER CABINET AS REQUIRED BY UTILITY COMPANY
- —G— GROUND BUS

MOTORS AND EQUIPMENT

- 5 — MOTOR – NUMBER INDICATES HORSEPOWER
- THERMAL OVERLOAD SWITCH
- WP — DISCONNECT SWITCH, "WP" DENOTES WEATHERPROOF
- WP — FUSED DISCONNECT SWITCH, "WP" DENOTES WEATHERPROOF
- MUSHROOM TYPE EMERGENCY SHUTDOWN SWITCH
- MAGNETIC MOTOR CONTROLLER
- COMBINATION DISCONNECT/MOTOR STARTER
- A — AQUASTAT FURNISHED AND INSTALLED BY PLUMBING CONTRACTOR, WIRED BY E.C.
- ATC — AUTOMATIC TEMPERATURE CONTROL PANEL POWER CONNECTION FURNISHED AND INSTALLED BY CONTROLS CONTRACTOR.
- VFD — VARIABLE FREQUENCY DRIVE, FURNISHED AND INSTALLED BY HVAC CONTRACTOR, WIRED BY E.C.
- P — DOOR OPENER PADDLE
- J — JUNCTION BOX
- ATC — JUNCTION BOX WITH FLEX CONNECTION TO EQUIPMENT

JUNCTION BOX SUBSCRIPT DESCRIPTION

"ATC"	CONNECTION TO AUTOMATIC TEMPERATURE CONTROLS
"AF"	CONNECTION TO AUTO FLUSH OR AUTO FAUCET
"EL"	CONNECTION TO EXAM LIGHT
"SEC"	CONNECTION TO SECURITY
"AD"	CONNECTION TO AUTOMATIC DOOR
"HD"	CONNECTION TO HAND DRYER
"PS"	CONNECTION TO MOTORIZED PROJECTION SCREEN
"EWC"	CONNECTION TO ELECTRIC WATER COOLER
"FH"	CONNECTION TO FUME HOOD

RACEWAYS

- LP1,2,4,6 — HOMERUN TO PANEL LP1, CIRCUIT #'S 2, 4 & 6 VIA 20A-1P CIRCUIT BREAKERS. TICKS INDICATE QUANTITY OF #12 AWG COPPER PHASE AND NEUTRAL CONDUCTORS. EQUIPMENT GROUND CONDUCTOR NOT INDICATE BUT SHALL BE PROVIDED EQUIPMENT GROUND CONDUCTOR SHALL BE PROVIDED IN ACCORDANCE WITH SPECIFICATIONS AND NEC MINIMUM SIZE. CONDUIT SHALL BE 3/4" MINIMUM UNLESS OTHERWISE NOTED. REFER TO THE "BRANCH CIRCUIT SCHEDULE" NOTES AND CIRCUIT LENGTH TABLE FOR WIRE SIZE INCREASES DUE TO VOLTAGE DROP.
- LP1,3 / 60/3 — HOMERUN TO PANEL 'LP1', CIRCUIT # 3 VIA 60A-3P CIRCUIT BREAKER. REFER TO "BRANCH CIRCUITS SCHEDULE" FOR CONDUCTOR SIZE, QUANTITIES AND CONDUIT INFORMATION.
- PB — PULL BOX
- CONDUIT TURN UP
- CONDUIT TURN DOWN
- CONDUIT STUB ABOVE CEILING
- 4" SLEEVE
- —CMS— CABLE MANAGEMENT SYSTEM
- 100Y — FEEDER SIZE TAG, REFER TO FEEDER SCHEDLE

RECEPTACLES

- C — DUPLEX RECEPTACLE, 'C' REFER TO RECEPTACLE SUBSCRIPT DESCRIPTION BELOW.
- DOUBLE DUPLEX RECEPTACLE
- GROUND FAULT INTERRUPTING DUPLEX RECEPTACLE
- DUPLEX RECEPTACLE ON EMERGENCY CIRCUIT
- DOUBLE DUPLEX RECEPTACLE ON EMERGENCY CIRCUIT
- GROUND FAULT INTERRUPTING DUPLEX RECEPTACLE ON EMERGENCY CIRCUIT
- GROUND FAULT INTERRUPTING DOUBLE DUPLEX RECEPTACLE ON EMERGENCY POWER
- SPECIAL PURPOSE RECEPTACLE – REFER TO SPECIAL PURPOSE RECEPTACLE SCHEDULE
- FLUSH MOUNT FLOOR OR CEILING BOX WITH RECEPTACLES AS SHOWN "CM" DENOTES CEILING MOUNTED
- COMBINATION DUPLEX USB CHARGER WITH HOSPITAL GRADE, TAMPER RESISTANT DUPLEX RECEPTACLE (P&S TR8300USB OR APPROVED EQUAL)
- QUAD USB CHARGER (P&S TM BUSB 4CC6 OR APPROVED EQUAL)
- CLOCK OUTLET BACK BOX WITH 1" CONDUIT TO SPACE ABOVE CORRIDOR CEILING
- CS — CLOCK AND SPEAKER BACK BOX WITH 1" CONDUIT TO SPACE ABOVE CORRIDOR CEILING
- WM1 — SURFACE MOUNTED RACEWAY FOR POWER. INSTALL DUPLEX RECEPTACLES 18" O.C. STARTING 6" FROM ONE END, FOR THE ENTIRE LENGTH OF RACEWAY. WIREMOLD 3000 SERIES OR APPROVED EQUAL.
- WM2 — SURFACE MOUNTED RACEWAY FOR POWER. INSTALL DUPLEX RECEPTACLES AS SHOWN ON FLOOR PLANS. WIREMOLD 3000 OR APPROVED EQUAL.
- WM3 — SURFACE MOUNTED RACEWAY W/ DIVIDER FOR POWER & DATA WIRING. INSTALL DUPLEX RECEPTACLES 18" O.C. AND INSTALL DATA OUTLETS AS SHOWN ON FLOOR PLANS. WIREMOLD 4000 SERIES OR APPROVED EQUAL.
- WM4 — SURFACE MOUNTED RACEWAY W/ DIVIDER FOR POWER & DATA WIRING. INSTALL DUPLEX RECEPTACLES AND DATA OUTLETS AS SHOWN ON FLOOR PLANS. WIREMOLD 4000 SERIES OR APPROVED EQUAL.

RECEPTACLE SUBSCRIPT DESCRIPTION

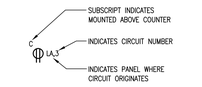

"C"	MOUNTED ABOVE COUNTER	"R"	REFRIGERATOR
"WP"	WEATHERPROOF	"CM"	CEILING MOUNTED
"W"	WASHING MACHINE	"DW"	DISHWASHER
"D"	DRYER	"M"	MICROWAVE
"IG"	ISOLATED GROUND	"T"	TAMPER PROOF
"RA"	RANGE	"ICE"	ICEMAKER
"WG"	WIRE GUARD	"DC"	DROP CORD
"GFI"	GROUND FAULT INTERUPTING	"EXP"	EXPLOSIVE PROOF

NOT FOR CONSTRUCTION - 03/30/2015

Engineer -
TCI
THOMPSON CONSULTANTS, INC.
525 MILL ST.
MARION, MA. 02738
Tel (508)-748-2620 * (866)-261-7487
Fax (508)-748-0059
www.thompson-consultants.com

Consultants -

Stamp -

Key Plan -

Project Name -
UNIVERSITY OF Rhode Island
Alton Jones Utility Power to Explosive Lab

Submissions -

No:	Title:	Date:

Sheet Information -

Job No:	084-1255.07
Drawn By:	AJP
Checked By:	MS
Date:	03/30/2015
Scale:	N.T.S.

Drawing Title -
ELECTRICAL LEGEND

Sheet Number -
E0.1

File: J:\JUR\084-1255.07\Elec\E0.1 - LEGEND.dwg
Save Date: 4/6/2015 11:19:58 AM
Plot Date: 4/8/2015 8:12:50 AM
User: aaron.paull

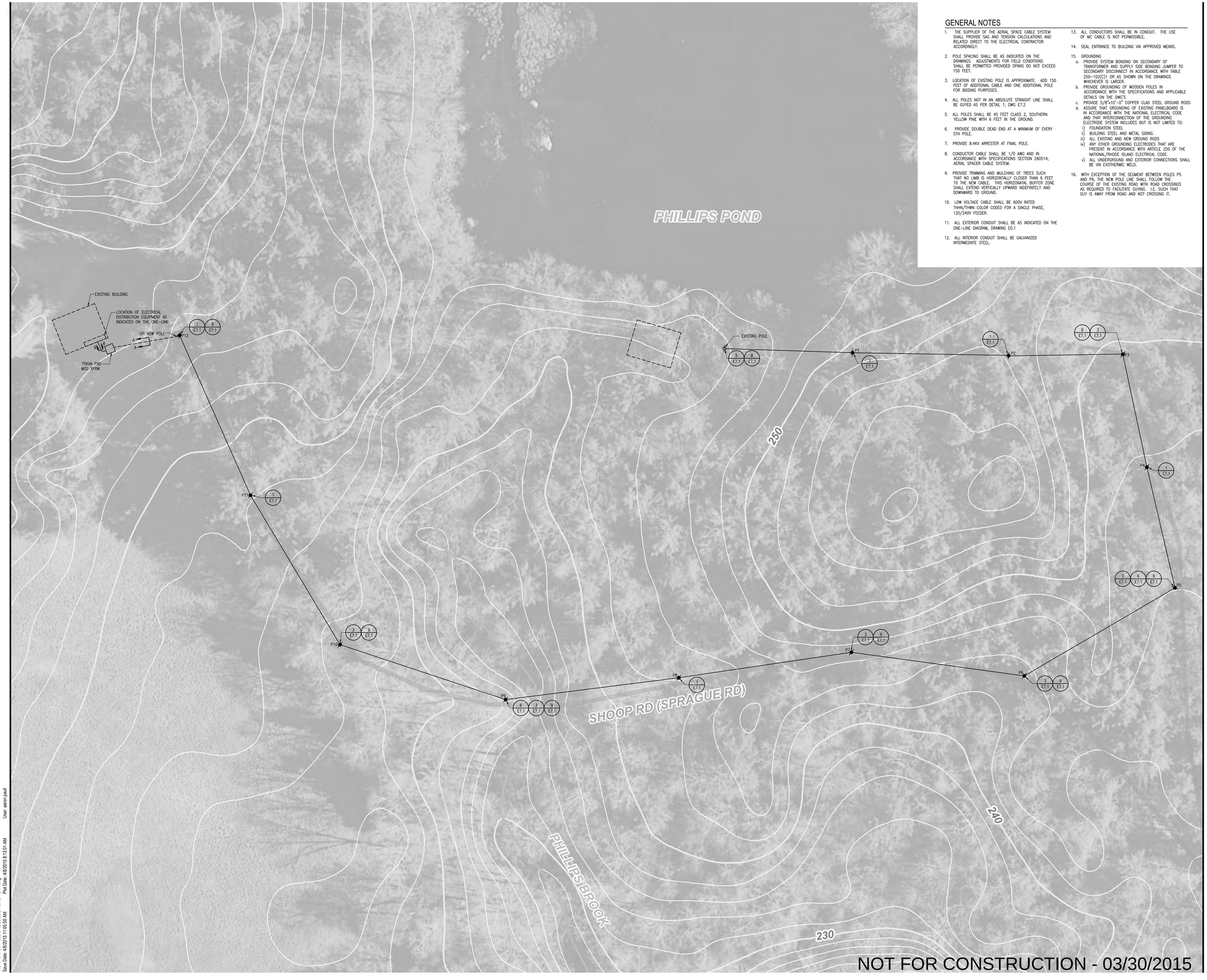

GENERAL NOTES

1. THE SUPPLIER OF THE AERIAL SPACE CABLE SYSTEM SHALL PROVIDE SAG AND TENSION CALCULATIONS AND RELATED DIRECT TO THE ELECTRICAL CONTRACTOR ACCORDINGLY.
2. POLE SPACING SHALL BE AS INDICATED ON THE DRAWINGS. ADJUSTMENTS FOR FIELD CONDITIONS SHALL BE PERMITTED PROVIDED SPANS DO NOT EXCEED 150 FEET.
3. LOCATION OF EXISTING POLE IS APPROXIMATE. ADD 150 FEET OF ADDITIONAL CABLE AND ONE ADDITIONAL POLE FOR BIDDING PURPOSES.
4. ALL POLES NOT IN AN ABSOLUTE STRAIGHT LINE SHALL BE GUYED AS PER DETAIL 1, DWG E7.2
5. ALL POLES SHALL BE 45 FEET CLASS 2, SOUTHERN YELLOW PINE WITH 6 FEET IN THE GROUND.
6. PROVIDE DOUBLE DEAD END AT A MINIMUM OF EVERY 5TH POLE.
7. PROVIDE 8.4KV ARRESTER AT FINAL POLE.
8. CONDUCTOR CABLE SHALL BE 1/0 AWG AND IN ACCORDANCE WITH SPECIFICATIONS SECTION 260514, AERIAL SPACER CABLE SYSTEM.
9. PROVIDE TRIMMING AND MULCHING OF TREES SUCH THAT NO LIMB IS HORIZONTALLY CLOSER THAN 6 FEET TO THE NEW CABLE. THIS HORIZONATAL BUFFER ZONE SHALL EXTEND VERTICALLY UPWARD INDEFINITELY AND DOWNWARD TO GROUND.
10. LOW VOLTAGE CABLE SHALL BE 600V RATED THHN/THWN COLOR CODED FOR A SINGLE PHASE, 120/240V FEEDER.
11. ALL EXTERIOR CONDUIT SHALL BE AS INDICATED ON THE ONE-LINE DIAGRAM, DRAWING E0.1
12. ALL INTERIOR CONDUIT SHALL BE GALVANIZED INTERMEDIATE STEEL.
13. ALL CONDUCTORS SHALL BE IN CONDUIT. THE USE OF MC CABLE IS NOT PERMISSIBLE.
14. SEAL ENTRANCE TO BUILDING VIA APPROVED MEANS.
15. GROUNDING
    a. PROVIDE SYSTEM BONDING ON SECONDARY OF TRANSFORMER AND SUPPLY SIDE BONDING JUMPER TO SECONDARY DISCONNECT IN ACCORDANCE WITH TABLE 250-102(C)1 OR AS SHOWN ON THE DRAWINGS WHICHEVER IS LARGER.
    b. PROVIDE GROUNDING OF WOODEN POLES IN ACCORDANCE WITH THE SPECIFICATIONS AND APPLICABLE DETAILS ON THE DWG'S
    c. PROVIDE 5/8"x10'-0" COPPER CLAD STEEL GROUND RODS
    d. ASSURE THAT GROUNDING OF EXISTING PANELBOARD IS IN ACCORDANCE WITH THE NATIONAL ELECTRICAL CODE AND THAT INTERCONNECTION OF THE GROUNDING ELECTRODE SYSTEM INCLUDES BUT IS NOT LIMITED TO:
        i) FOUNDATION STEEL
        ii) BUILDING STEEL AND METAL SIDING.
        iii) ALL EXISTING AND NEW GROUND RODS
        iv) ANY OTHER GROUNDING ELECTRODES THAT ARE PRESENT IN ACCORDANCE WITH ARTICLE 250 OF THE NATIONAL/RHODE ISLAND ELECTRICAL CODE.
        v) ALL UNDERGROUND AND EXTERIOR CONNECTIONS SHALL BE VIA EXOTHERMIC WELD.
16. WITH EXCEPTION OF THE SEGMENT BETWEEN POLES P5 AND P6, THE NEW POLE LINE SHALL FOLLOW THE COURSE OF THE EXISTING ROAD WITH ROAD CROSSINGS AS REQUIRED TO FACILITATE GUYING. I.E. SUCH THAT GUY IS AWAY FROM ROAD AND NOT CROSSING IT.

NOT FOR CONSTRUCTION - 03/30/2015

Engineer -

T C I

THOMPSON CONSULTANTS, INC.
525 MILL ST.
MARION, MA. 02738

Tel (508)-748-2620 * (866)-261-7487
Fax (508)-748-0059
www.thompson-consultants.com

Consultants -

Stamp -

Key Plan -

Project Name -

UNIVERSITY OF Rhode Island

Alton Jones Utility Power to Explosive Lab

Submissions -

No:	Title:	Date:

Sheet Information -

Job No:	084-1255.07
Drawn By:	AJP
Checked By:	MS
Date:	03/30/2015
Scale:	1"=20'

Drawing Title -

ELECTRICAL SITE PLAN

Sheet Number -

E0.2

File: J:\URI\084-1255.07\Elec\E0.2 - SITE PLAN.dwg
Save Date: 4/6/2015 11:05:50 AM
Plot Date: 4/8/2015 8:13:01 AM
User: aaron.paull
J:\URI\084-1255.07\Elec\E0.2 - SITE PLAN.dwg, 4/8/2015 8:12:54 AM

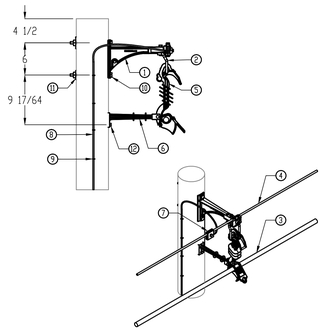

ITEM	DESCRIPTION	QTY
1	MESSENGER BRACKET, HENDRIX TYPE BM-14	1
2	STIRRUP, HENDRIX TYPE TS-1	1
3	HENDRIX AERIAL CABLE,(SIZE AND VOLTAGE RATING AS REQ)	AS REQ
4	MESSENGER, (SIZE AND TYPE AS REQUIRED)	AS REQ
5	SPACER, HENDRIX TYPE RTL-20V	1
6	ANTI-SWAY BRACKET, HENDRIX TYPE BAS-14F	1
7	CONNECTOR, SIZE AND TYPE AS REQUIRED	1
8	GROUND WIRE, SOFT DRAWN COPPER, SOLID #6 AWG (MIN)	AS REQ
9	GROUND WIRE STAPLE	AS REQ
10	MACHINE BOLT, 5/8" X REQ. LENGTH	2
11	SQUARE WASHER, 2 1/4" X 2 1/4" X 3/16" (MIN)	2
12	FETTER DRIVE LAG SCREW, 1/2" X 4"	1

1 TYPICAL SINGLE PHASE TANGENT CONSTRUCTION POLE

SCALE: NONE

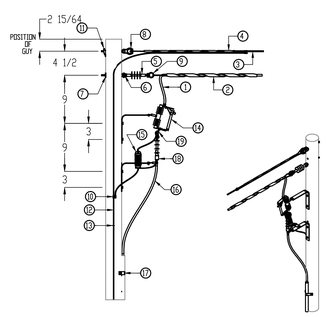

ITEM	DESCRIPTION	QTY
1	HENDRIX AERIAL CABLE,(SIZE AND VOLTAGE RATING AS REQ)	AS REQ
2	PRESHAPED CONDUCTOR GRIP, COATED	1
3	MESSENGER, (SIZE AND TYPE AS REQUIRED)	AS REQ
4	PRESHAPED MESSENGER GRIP	1
5	INSULATOR, POLYMER DEAD-END TYPE (15kV	1
6	EYE BOLT, 3/4"x REQ LENGTH	2
7	SQUARE WASHER, 2-1/4" X 2-1/4" X 3/16" (MIN)	1
8	THIMBLE CLEVIS, HENDRIX CATALOG NO. HDTC	1
9	THIMBLE CLEVIS, HENDRIX CATALOG NO. TC	1
10	CONNECTORS, (SIZE AND TYPE AS REQ)	AS REQ
11	GUY HOOK	1
12	GROUND WIRE, SOFT DRAWN COPPER, SOLID #6 AWG MIN	AS REQ
13	GROUND WIRE STAPLE	AS REQ
14	FUSED CUTOUT	1
15	LIGHTNING ARRESTER	1
16	UNDER GROUND RISER CABLE	AS REQ
17	CONDUIT	AS REQ
18	TERMINATORS	1
19	INSULATED TAP WIRE	AS REQ

2 TYPICAL SINGLE PHASE DEAD-END WITH UNDERGROUND RISER POLE

SCALE: NONE

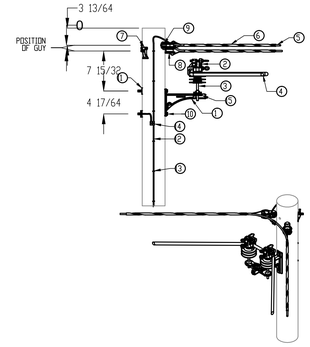

ITEM	DESCRIPTION	QTY
1	MESSENGER BRACKET, HENDRIX TYPE BM-14	1
2	INSULATOR, PIN TYPE, HENDRIX HPI-15VTP	2
3	INSULATOR PIN, HENDRIX SSP-2	2
4	HENDRIX AERIAL CABLE,(SIZE AND VOLTAGE RATING AS REQ)	AS REQ
5	MESSENGER, (SIZE AND TYPE AS REQUIRED)	AS REQ
6	PRESHAPED MESSENGER GRIP	2
7	GUY HOOK	2
8	THIMBLE CLEVIS, HENDRIX HDTC	2
9	EYE BOLT, 3/4" X REQ LENGTH	2
10	MACHINE BOLT, 5/8" X REQ. LENGTH	2
11	SQUARE WASHER, 2-1/4" X 2-1/4" X 3/16" (MIN)	3
12	GROUND WIRE, SOFT DRAWN SOLID, #6 AWG MIN	AS REQ
13	GROUND WIRE STAPLE	AS REQ
14	CONNECTORS, (SIZE AND TYPE AS REQ)	AS REQ
15	DOUBLE INSULATOR PLATE, HENDRIX ZIP	1

3 TYPICAL SINGLE PHASE ANGLE CONSTRUCTION

SCALE: NONE

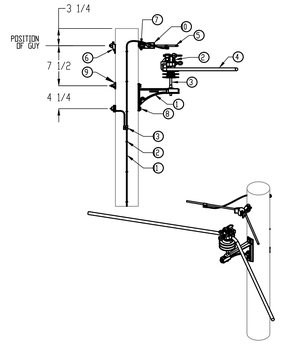

ITEM	DESCRIPTION	QTY
1	MESSENGER BRACKET, HENDRIX TYPE BM-14	1
2	INSULATOR, PIN TYPE, HENDRIX HPI-15VTP	1
3	INSULATOR PIN, HENDRIX SSP-2	1
4	HENDRIX AERIAL CABLE,(SIZE AND VOLTAGE RATING AS REQ)	AS REQ
5	MESSENGER, (SIZE AND TYPE AS REQUIRED)	AS REQ
6	GUY HOOK	1
7	EYE BOLT, 3/4" X REQ LENGTH	1
8	MACHINE BOLT, 5/8" X REQ LENGTH	2
9	SQUARE WASHER, 2-1/4" X 2-1/4" X 3/16" (MIN)	3
10	ANGLE CLAMP, HENDRIX CMA-1	1
11	GROUND WIRE, SOFT DRAWN SOLID, #6 AWG MIN	AS REQ
12	GROUND WIRE STAPLE	AS REQ
13	CONNECTOR, (SIZE AND TYPE AS REQ)	AS REQ

4 TYPICAL SINGLE PHASE ANGLE CONSTRUCTION POLE

SCALE: NONE

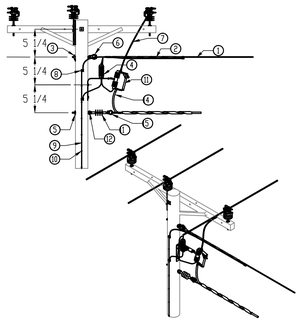

ITEM	DESCRIPTION	QTY
1	INSULATOR, POLYMER DEAD-END TYPE (15kV)	1
2	HENDRIX AERIAL CABLE,(SIZE AND VOLTAGE RATING AS REQ)	AS REQ
3	MESSENGER, (SIZE AND TYPE AS REQUIRED)	AS REQ
4	GUY HOOK	1
5	PRESHAPED MESSENGER GRIP	1
6	SQUARE WASHER, 2-1/4" X 2-1/4" X 3/16" (MIN)	2
7	THIMBLE CLEVIS, HENDRIX CATALOG NO. TC	1
8	HEAVY DUTY THIMBLE CLEVIS, HENDRIX CATALOG NO. HDTC	1
9	LIGHTNING ARRESTER	1
10	FUSED CUT OUT	1
11	CONNECTORS, (SIZE AND TYPE AS REQ)	AS REQ
12	EYE BOLT, 3/4" X REQ LENGTH	2
13	COVERED TAP WIRE	AS REQ
14	GROUND WIRE, SOFT DRAWN COPPER, SOLID #6 AWG	AS REQ
15	GROUND WIRE STAPLES	AS REQ

5 TYPICAL SINGLE PHASE TAP FROM BARE WIRE POLE

SCALE:

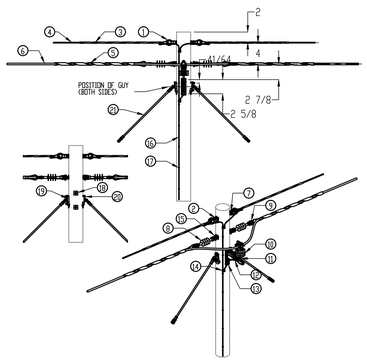

ITEM	DESCRIPTION	QTY
1	THIMBLE CLEVIS, HEAVY DUTY, HENDRIX TYPE HDTC	2
2	EYE BOLT, 3/4" X REQ LENGTH	2
3	PRESHAPED MESSENGER GRIP	2
4	MESSENGER, (SIZE AND TYPE AS REQUIRED)	AS REQ
5	PRESHAPED CONDUCTOR GRIP, COATED	2
6	HENDRIX AERIAL CABLE,(SIZE AND VOLTAGE RATING AS REQ)	AS REQ
7	EYENUT, 3/4"	2
8	INSULATOR, POLYMER DEAD-END TYPE (15kV)	2
9	THIMBLE CLEVIS, HENDRIX CATALOG NO. TC	2
10	INSULATOR, PIN TYPE, HENDRIX HPI-15VTP	1
11	INSULATOR PIN, HENDRIX SSP-2	1
12	MESSENGER BRACKET, HENDRIX TYPE BM-14	1
13	MACHINE BOLT, 5/8" X REQ. LENGTH	2
14	CONNECTORS, (SIZE AND TYPE AS REQ)	4
15	SHACKLE CLEVIS, HENDRIX CATALOG NO. SC	2
16	GROUND WIRE, SOFT DRAWN COPPER, SOLID, #6 AWG MIN	AS REQ
17	GROUND WIRE STAPLE	AS REQ
18	SQUARE WASHER, 2-1/4" X 2-1/4" X 3/16" MIN	6
19	POLE EYE PLATE	2
20	MACHINE BOLT, 3/4" X REQ LENGTH	4
21	FIBERGLASS STRAIN INSULATOR	2

6 TYPICAL TANGENT DOUBLE DEAD-END POLE

SCALE:

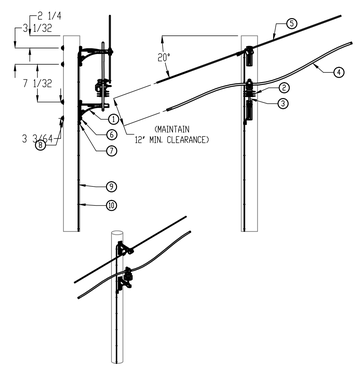

ITEM	DESCRIPTION	QTY
1	MESSENGER BRACKET, HENDRIX TYPE BM-14	1
2	INSULATOR, PIN TYPE, HENDRIX HPI-15VTP	1
3	INSULATOR PIN, HENDRIX SSP-2	1
4	HENDRIX AERIAL CABLE,(SIZE AND VOLTAGE RATING AS REQ)	AS REQ
5	MESSENGER, (SIZE AND TYPE AS REQUIRED)	AS REQ
6	MACHINE BOLT, 5/8" X REQ. LENGTH	4
7	CONNECTORS, (SIZE AND TYPE AS REQ)	2
8	SQUARE WASHER, 2-1/4" X 2-1/4" X 3/16" (MIN)	4
9	GROUND WIRE, SOFT DRAWN COPPER, SOLID #6AWG	AS REQ
10	GROUND WIRE STAPLE	AS REQ

7 TYPICAL STEEP GRADE CONSTRUCTION USING BM-14 POLE

SCALE:

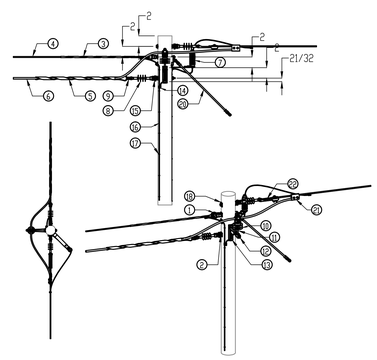

ITEM	DESCRIPTION	QTY
1	THIMBLE CLEVIS, HEAVY DUTY, HENDRIX TYPE HDTC	1
2	EYE BOLT, 3/4" X REQ LENGTH	3
3	PRESHAPED MESSENGER GRIP	1
4	MESSENGER, (SIZE AND TYPE AS REQUIRED)	AS REQ
5	PRESHAPED CONDUCTOR GRIP, COATED	1
6	HENDRIX AERIAL CABLE,(SIZE AND VOLTAGE RATING AS REQ)	AS REQ
7	LIGHTNING ARRESTOR	1
8	INSULATOR, POLYMER DEAD-END TYPE (15kV)	2
9	THIMBLE CLEVIS, HENDRIX CATALOG NO. TC	1
10	INSULATOR, PIN TYPE, HENDRIX HPI-15VTP	1
11	INSULATOR PIN, HENDRIX SSP-2	1
12	MESSENGER BRACKET, HENDRIX TYPE BM-14	1
13	MACHINE BOLT, 5/8" X REQ. LENGTH	2
14	CONNECTORS, (SIZE AND TYPE AS REQ)	3
15	SHACKLE CLEVIS, HENDRIX CATALOG NO. SC	2
16	GROUND WIRE, SOFT DRAWN COPPER, SOLID, #6 AWG MIN	AS REQ
17	GROUND WIRE STAPLE	AS REQ
18	SQUARE WASHER, 2-1/4" X 2-1/4" X 3/16" MIN	7
19	POLE EYE PLATE	1
20	FIBERGLASS STRAIN INSULATOR	1
21	UNIVERSAL GROOVE CLAMP	1
22	DEAD-END BARE WIRE CLAMP	1

8 TYPICAL SINGLE PHASE DEAD-END TRANSITION TO BARE POLE

SCALE:

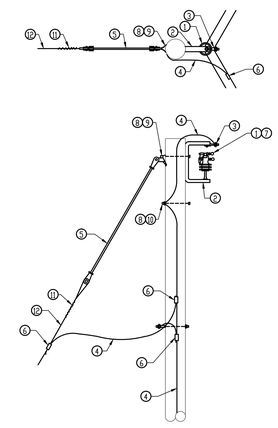

ITEM	DESCRIPTION
1	INSULATOR, PIN TYPE, POLYETHYLENE, 15KV, VICE TOP
2	BRACKET, 15KVA, HENDRIX, 60 DEG. "E" ANGLE, INCLUDING U-BOLT
3	ANGLE CLAMP, MESSENGER ANGLE SUSPENSION, GALV., #6-3/0 IN-LINE
4	GROUND CONDUCTOR, #6, SOLID CU, SD, BARE
5	INSULATOR, FIBERGLASS, GUY STRAIN, 15,000# MIN. STRENGTH
6	PARALLEL CLAMP, BOLTED ALUMINUM, SIZED AS REQUIRED
7	PIN, INSULATOR, 1", SHORT SHANK (3/4"x7")
8	BOLT, MACHINE, THRU, 3/4"x(MIN), GALVANIZED
9	PLATE, GUY EYE, 3/4", GALV., FOR FIBERGLASS GUY STRAIN INSULATOR
10	WASHER, SQUARE, 3"x3", CURVED, GALVANIZED, FOR 3/4" HARDWARE
11	DEADEND, 3/8" GUY, PREFORMED
12	WIRE, GUY STRAND, 3/8" GALVANIZED

9 GUY WIRE DETAIL

SCALE: NONE

NOT FOR CONSTRUCTION - 03/30/2015

Engineer -

T C I

THOMPSON CONSULTANTS, INC.
525 MILL ST.
MARION, MA. 02738

Tel (508)-748-2620 * (866)-261-7487
Fax (508)-748-0059
www.thompson-consultants.com

Consultants -

Stamp -

Key Plan -

Project Name -

UNIVERSITY OF Rhode Island

Alton Jones Utility Power to Explosive Lab

Submissions -

No:	Title:	Date:

Sheet Information -

Job No:	084-1255.07
Drawn By:	AJP
Checked By:	MSI
Date:	03/30/2015
Scale:	N.T.S.

Drawing Title -

ELECTRICAL DETAILS

Sheet Number -

E7.1

J:\UR\084-1255.07\Elec\E7.1 - DETAILS.dwg, 4/8/2015 8:13:10 AM
File: J:\UR\084-1255.07\Elec\E7.1 - DETAILS.dwg
Save Date: 4/1/2015 11:16:58 AM Plot Date: 4/8/2015 8:13:13 AM User: aaron paull