THE
UNIVERSITY
OF RHODE ISLAND
DIVISION OF
ADMINISTRATION
AND FINANCE

THINK BIG WE DO

PURCHASING DEPARTMENT
581 Plains Road, Suite 3, Kingston, RI 02881 USA p: 401.874.2171 f: 401.874.2306 uri.edu/purchasing

BID/PROPOSAL

COMMODITY: **SLICERS & SHREDDERS** DATE: **3/6/2015**

FORMAL BID NO. _____ PUBLIC BID NO. **100077** RFP NO. _____

BIDS ARE TO BE RECEIVED IN URI PURCHASING DEPARTMENT BY: DATE: **3/27/2015** TIME: **3:00PM**

BUYER: **KAROL CHADWICK/ rlc** SURETY REQUIRED: YES: _____ NO: **X**

Karol Chadwick

PRE-BID/PROPOSAL CONFERENCE: DATE: _____ TIME: _____

MANDATORY: YES: _____ NO: _____

LOCATION: _____

BE SURE ALL INFORMATION SHOWN BELOW IS CORRECT.
FEDERAL EMPLOYER IDENTIFICATION NUMBER MUST BE INCLUDED.

COMPANY NAME: _____ FEIN: _____

STREET AND NUMBER: _____

CITY, STATE & ZIP CODE: _____

ORDERING E-MAIL ADDRESS: _____

No offer will be considered that is not accompanied by the attached University of Rhode Island Bidder Certification Form/Contract Offer <u>completed</u> and <u>signed</u> by the offeror.

Print Name and Title _____ Telephone Number/Facsimile Number _____

Signature _____ Date _____ Company F.E.I.N. _____

THIS BID WILL NOT BE HONORED UNLESS SIGNED

The University of Rhode Island is an equal opportunity employer committed to the principles of affirmative action.

University of Rhode Island Bidder Certification Form

ALL OFFERS ARE SUBJECT TO THE REQUIREMENTS, PROVISIONS AND PROCEDURES CONTAINED IN THIS CERTIFICATION FORM. Offerors are expected to read, sign and comply with all requirements. Failure to do so may be grounds for disqualification of the offer contained herein.

Rules for Submitting Offers

This Certification Form must be attached in its entirety to the front of the offer and shall be considered an integral part of each offer made by a vendor to enter into a contract with the University of Rhode Island. As such, submittal of the entire Bidder Certification Form, signed by a duly authorized representative of the offeror attesting that he/she (1) has read and agrees to comply with the requirements set forth herein and (2) to the accuracy of the information provided and the offer extended, is a mandatory part of any contract award.

To assure that offers are considered on time, each offer must be submitted with the specific Bid/RFP/LOI number, date and time of opening marked in the upper left hand corner of the envelope. Each bid/offer must be submitted in separate sealed envelopes.

A complete signed (in ink) offer package must be delivered to the University of Rhode Island Purchasing Office by the time and date specified for the opening of responses in a sealed envelope.

Bids must be submitted on the URI bid solicitation forms provided, indicating brand and part numbers of items offered, as appropriate. Bidders must submit detailed cuts and specs on items offered as equivalent to brands requested WITH THE OFFER. Bidders must be able to submit samples if requested.

Documents misdirected to other State locations or which are not present in the University of Rhode Island Purchasing Office at the time of opening for whatever cause will be deemed to be late and will not be considered. For the purposes of this requirement, the official time and date shall be that of the time clock in the reception area of the University of Rhode Island Purchasing Office. Postmarks shall not be considered proof of timely submission.

RIVIP SOLICITATIONS. To assure maximum access opportunities for users, public bid/RFP solicitations shall be posted on the RIVIP for a minimum of seven days and no amendments shall be made within the last five days before the date an offer is due. Except when access to the Web Site has been severely curtailed and it is determined by the Purchasing Agent that special circumstances preclude extending a solicitation due date, requests to mail or fax hard copies of solicitations will not be honored. When the result of an internet solicitation is unsuccessful, the University of Rhode Island will cancel the original solicitation and resolicit the original offer directly from vendors.

PRICING. Offers are irrevocable for sixty (60) days from the opening date (or such other extended period set forth in the solicitation), and may not be withdrawn, except with the express permission of the University Purchasing Agent. All pricing will be considered to be firm and fixed unless otherwise indicated. The University of Rhode Island is exempt from Federal excise taxes and State Sales and Use Taxes. Such taxes shall not be included in the bid price. PRICES QUOTED ARE FOB DESTINATION.

DELIVERY and PRODUCT QUALITY. All offers must define delivery dates for all items; if no delivery date is specified, it is assumed that immediate delivery from stock will be made. The contractor will be responsible for delivery of materials in first class condition. Rejected materials will be at the vendor's expense.

PREVAILING WAGE, OSHA SAFETY TRAINING and APPRENTICESHIP REQUIREMENTS. Bidders must comply with the provisions of the Rhode Island labor laws, including R.I. Gen. Laws §§ 37-13-1 et seq. and occupational safety laws, including R.I. Gen. Laws §§ 28-20-1 et seq. These laws mandate for public works construction projects the payment of prevailing wage rates, the implementation and maintenance of occupational safety standards, and for projects with a minimum value of $1 Million, the employment of apprentices. The successful Bidder must submit certifications of compliance with these laws from each of its subcontractors prior to their commencement of any work. Prevailing wage rates, apprenticeship requirements, and other workforce and safety regulations are accessible at www.dlt.ri.gov.

PUBLIC RECORDS. Offerors are advised that all materials submitted to the University for consideration in response to this solicitation will be considered without exception to be Public Records pursuant to Title 38 Chapter 2 of the Rhode Island General Laws, and will be released for inspection immediately upon request once an award has been made. Offerors are encouraged to attend public bid/RFP openings to obtain information; however, bid/RFP response summaries may be reviewed after award(s) have been made by visiting the Rhode Island Vendor Information Program (RIVIP) at www.purchasing.ri.gov, Solicitation Opportunities +, Other Solicitation Opportunities or appearing in person at the University of Rhode Island Purchasing Office Mondays through Fridays between 8:30 am – 3:30 pm. Telephone requests for results will not be honored. Written requests for results will only be honored if the information is not available on the RIVIP.

Award will be made the to the responsive and responsible offeror quoting the lowest net price in accordance with specifications, for any individual item(s), for major groupings of items, or for all items listed, at the University's sole option.

BID SURETY. Where bid surety is required, bidder must furnish a bid bond or certified check for 5% of the bid total with the bid, or for such other amount as may be specified. Bids submitted without a required bid surety will not be considered.

SPECIFICATIONS. Unless specified "no substitute", product offerings equivalent in quality and performance will be considered (at the sole option of the University) on the condition that the offer is accompanied by detailed product specifications. Offers which fail to include alternate specifications may be deemed nonresponsive.

VENDOR AUTHORIZATION TO PROCEED. When a purchase order, change order, contract/agreement or contract/agreement amendment is issued by the University of Rhode Island, no claim for payment for services rendered or goods delivered contrary to or in excess of the contract terms and scope shall be considered valid unless the vendor has obtained a written change order or contract amendment issued by the University of Rhode Island Purchasing Office PRIOR to delivery.

Any offer, whether in response to a solicitation for proposals or bids, or made without a solicitation, which is accepted in the form of an order OR pricing agreement made in writing by the University of Rhode Island Purchasing Office, shall be considered a binding contract.

REGULATIONS, GENERAL TERMS AND CONDITIONS GOVERNING STATE AND BOARD OF GOVERNORS FOR HIGHER EDUCATION CONTRACTS. This solicitation and any contract or purchase order arising from it are issued in accordance with the specific requirements described herein, and the State's Purchasing Laws and Regulations and other applicable State Laws, including the Board of Governors for Higher Education General Terms and Conditions of Purchase. The regulations, General Terms and Conditions are incorporated into all University of Rhode Island contracts and can be viewed at: www.ribghe.org/procurementregs113006.pdf and www.purchasing.ri.gov.

ARRA SUPPLEMENTAL TERMS AND CONDITIONS. Contracts and sub-awards funded in whole or in part by the American Recovery and Reinvestment Act of 2009. Pub.L.No. 111-5 and any amendments thereto, such contracts and sub-awards shall be subject to the Supplemental Terms and Conditions for Contracts and Sub-awards funded in whole or in part by the American Recovery and Reinvestment Act of 2009. Pub.L.No. 111-5 and any amendments thereto located on the Division of Purchases website at www.purchasing.ri.gov.

EQUAL EMPLOYMENT OPPORTUNITY. Compliance certificate and agreement procedures will apply to all awards for supplies or services valued at $10,000 or more. Minority Business Enterprise policies and procedures, including subcontracting opportunities as described in Title 37 Chapter 14.1 of the Rhode Island General Laws also apply.

PERFORMANCE BONDS. Where indicated, successful bidder must furnish a 100% performance bond and labor and payment bond for contracts subject to Title 37 Chapters 12 and 13 of the Rhode Island General Laws. All bonds must be furnished by a surety company authorized to conduct business in the State of Rhode Island. Performance bonds must be submitted within 21 calendar days of the issuance of a tentative notice of award.

DEFAULT and NON-COMPLIANCE Default and/or non-compliance with the requirements and any other aspects of the award may result in withholding of payment(s), contract termination, debarment, suspension, or any other remedy necessary that is in the best interest of the state/University of Rhode Island.

COMPLIANCE Vendor must comply with all applicable federal, state and local laws, regulations and ordinances.

SPRINKLER IMPAIRMENT AND HOT WORK. The Contractor agrees to comply with the practices of the State's Insurance carrier for sprinkler impairment and hot work. Prior to performing any work, the Contractor shall obtain the necessary information for compliance from the Risk Management Office at the Department of Administration or the Risk Management Office at the University of Rhode Island.

Each bid proposal for a *public works project* must include a "public copy" to be available for public inspection upon the opening of bids. **Bid Proposals that do not include a copy for public inspection will be deemed nonresponsive.**

For further information on how to comply with this statutory requirement, see R.I. Gen. Laws §§ 37-2-18(b) and (j). Also see State of Rhode Island Procurement Regulation 5.11 at http://www.purchasing.ri.gov/rulesandregulations/rulesAndRegulations.aspx

ALL CONTRACT AWARDS ARE SUBJECT TO THE FOLLOWING DISCLOSURES & CERTIFICATIONS
Offerors must respond to every disclosure statement. A person authorized to enter into contracts must sign the offer and attest to the accuracy of all statements.

Indicate Yes (Y) or No (N):

____1 State whether your company, or any owner, stockholder, officer, director, member, partner, or principal thereof, or any subsidiary or affiliated company, has been subject to suspension or debarment by any federal, state, or municipal government agency, or the subject of criminal prosecution, or convicted of a criminal offense with the previous five (5) years. If so, then provide details below.

____2 State whether your company, or any owner, stockholder, officer, director, member, partner, or principal thereof, or any subsidiary or affiliated company, has had any contracts with a federal, state or municipal government agency terminated for any reason within the previous five (5) years. If so, then provide details below.

____3 State whether your company or any owner, stockholder, officer, director, member, partner, or principal thereof, or any subsidiary or affiliated company, has been fined more than $5000 for violation(s) of Rhode Island environmental laws by the Rhode Island Department of Environmental Management within the previous five (5) years. If so, then provide details below.

____4 I/we certify that I/we will immediately disclose, in writing, to the University Purchasing Agent any potential conflict of interest which may occur during the course of the engagement authorized pursuant to this contract.

____5 I/we acknowledge that, in accordance with (1) Chapter §37-2-54(c) of the Rhode Island General Laws "no purchase or contract shall be binding on the state or any agency thereof unless approved by the Department [of Administration] or made under general regulations which the Chief Purchasing Officer may prescribe," and (2) RIGL section §37-2-7(16) which identifies the Board of Governors for Higher Education as a public agency and gives binding contractual authority to the University Purchasing Agent, including change orders and other types of contracts and under State Purchasing Regulation 8.2.1.1.2 any alleged oral agreement or arrangements made by a bidder or contractor with any agency or an employee of the University of Rhode Island may be disregarded and shall not be binding on the University of Rhode Island.

____6 I/we certify that I or my/our firm possesses all licenses required by Federal and State laws and regulations as they pertain to the requirements of the solicitation and offer made herein and shall maintain such required license(s) during the entire course of the contract resulting from the offer contained herein and, should my/our license lapse or be suspended, I/we shall immediately inform the University of Rhode Island Purchasing Agent in writing of such circumstance.

____7 I/we certify that I/we will maintain required insurance during the entire course of the contract resulting from the offer contained herein and, should my/our insurance lapse or be suspended, I/we shall immediately inform the University of Rhode Island Purchasing Agent in writing of such circumstance.

____8 I/we certify that I/we understand that falsification of any information herein or failure to notify the University of Rhode Island Purchasing Agent as certified herein may be grounds for suspension, debarment and/or prosecution for fraud.

____9 I/we acknowledge that the provisions and procedures set forth in this form apply to any contract arising from this offer.

____10 I/we acknowledge that I/we understand the State's Purchasing Laws (§37-2 of the General Laws of Rhode Island) and Purchasing Regulations and General Terms and Conditions available at the Rhode Island Division of Purchases Website (http://www.purchasing.ri.gov) and the Board of Governors Website (www.ribghe.org/procurementregs113006.pdf) apply as the governing conditions for any contract or purchase order I/we may receive from the University of Rhode Island, including the offer contained herein.

____11 I/we certify that the bidder: (i) is not identified on the General Treasurer's list, created pursuant to R.I. Gen. Laws § 37-2.5-3, as a person or entity engaging in investment activities in Iran described in § 37-2.5-2(b); and (ii) is not engaging in any such investment activities in Iran.

____12 If the product is subject to Department of Commerce Export Administration Regulations (EAR) or International Traffic in Arms Regulations (ITAR), please provide the Export Control Classification Number (ECCN) or the US Munitions List (USML) Category:_____

____13 I/we certify that the above information is correct and complete.

IF YOU HAVE ANSWERED "YES" TO QUESTIONS #1 – 3 OR IF YOU ARE UNABLE TO CERTIFY YES TO QUESTIONS #4 – 11 and 13 OF THE FOREGOING, PROVIDE DETAILS/EXPLANATION IN AN ATTACHED STATEMENT. INCOMPLETE CERTIFICATION FORMS SHALL BE GROUNDS FOR DISQUALIFICATION OF OFFER.

Signature below commits vendor to the attached offer and certifies (1) that the offer has taken into account all solicitation amendments, (2) that the above statements and information are accurate and that vendor understands and has complied with the requirements set forth herein.

Vendor's Signature:_____ Bid Number:_____ Date:_____
(Person Authorized to enter into contracts; signature must be in ink) (if applicable)

_____
Print Name and Title of Company official signing offer Telephone Number

COMMODITY: SLICERS & SHREDDERS
OPENING DATE & TIME: 3/27/15 3:00PM

SHIP TO:
URI Dining Services
Food Distribution Center
581 Plains Road
Kingston, RI 02881

BIDDER (NAME OF FIRM)

BID NO: 100077

BIDDER (NAME OF FIRM)

BID NO: 100077

ATTACHMENT "A"

ITEM NO.	DESCRIPTION	QUANTITY	UOM	UNIT PRICE	EXTENDED PRICE	UNIT PRICE	EXTENDED PRICE	ITEM NO.

INSTRUCTIONS:

IF BIDDING ON ANY ITEM, THE ENTIRE BID MUST BE RETURNED. THE PRICE COLUMN ON THE RIGHT WILL BE DETACHED TO CREATE A BID TABULATION SPREAD SHEET FOR THE "OFFICIAL BID ANALYSIS", THEREFORE:

A. VENDOR NAME MUST APPEAR IN BOTH COLUMNS ON "EVERY" PAGE UNDER THE WORDS "BIDDER"

B. PRICE COLUMNS MUST CONTAIN "EXACTLY" THE SAME INFORMATION.

C. ANY SUPPLEMENTARY INFORMATION MUST BE REPEATED IN "BOTH" COLUMNS.

D. TO ASSURE THAT OFFERS ARE CONSIDERED ON TIME, EACH OFFER MUST BE SUBMITTED WITH SPECIFIC BID/RFP NUMBER (PROVIDED ABOVE), DATE AND TIME OF OPENING MARKED IN THE UPPER LEFT HAND CORNER OF ENVELOPE. EACH BID/ OFFER MUST BE SUBMITTED IN SEPARATE SEALED ENVELOPES:

MAIL TO:	**COURIER:**
UNIVERSITY OF RHODE ISLAND	**UNIVERSITY OF RHODE ISLAND**
P.O. BOX 1773	**PURCHASING DEPARTMENT**
PURCHASING DEPARTMENT	**DINING SERVICES DISTRIBUTION CENTER**
PLAINS ROAD	**581 PLAINS ROAD**
KINGSTON, RI 02881	**KINGSTON, RI 02881-2010**

DOCUMENTS MISDIRECTED TO OTHER STATE LOCATIONS OR WHICH ARE NOT PRESENT IN THE UNIVERSITY OF RHODE ISLAND PURCHASING DEPARTMENT AT THE TIME OF OPENING FOR WHATEVER CAUSE WILL BE DEEMED TO BE LATE AND WILL NOT BE CONSIDERED. FOR THE PURPOSE OF THIS REQUIREMENT, THE OFFICIAL TIME AND DATE SHALL BE THAT OF THE TIME CLOCK IN THE UNIVERSITY OF RHODE ISLAND PURCHASING DEPARTMENT. POSTMARKS SHALL NOT BE CONSIDERED PROOF OF TIMELY SUBMISSION.

FAILURE TO COMPLETE FORM AS INSTRUCTED MAY BE GROUNDS FOR "DISQUALIFICATION".

GROUP PURCHASING ORGANIZATIONS (GPO):
THE UNIVERSITY OF RHODE ISLAND IS A MEMBER OF THE FOLLOWING:
1) Educational & Institutional Cooperative Purchasing (E&I)
2) Provista

NO SUBSTITUTION ON BRAND

1	**HOBART FP-150** Food processor with standard features to include 1 accessory package (6-Pack Plates: 1/16, 5/32, 3/8, 7/32 Slicer plates, 3/16 shredder plate and 3/8 dicer plate, 2 wall racks. (SEE ATTACHED SPECIFICATIONS)	2	each	$_____	$_____	$_____	$_____	1

Item # _____

Quantity _____

C.S.I. Section 11400

HOBART
701 S Ridge Avenue, Troy, OH 45374
1-888-4HOBART • www.hobartcorp.com

FP150 FOOD PROCESSOR

STANDARD FEATURES

- Red OFF, Green ON Buttons
- Compact Design
- Angled Front
- Planetary Drive
- Large Full Size Feed Hopper
- All Aluminum Hopper and Housing
- Double Interlock Switch
- Plate Speed 420 RPM
- Decoring Screw

OPTIONS

- ❑ Maximum Security Correctional Package

ACCESSORIES

- ❑ 3-Pack Plates: 1/16, 5/32 slicer plates, 3/16 shredder plate, 1 wall rack
- ❑ 6-Pack Plates: 1/16, 5/32, 3/8, 7/32 slicer plates, 3/16 shredder plate and 3/8 dicer plate, 2 wall racks
- ❑ 3-Peg Wall Rack: designed to hold three plates for additional plate storage
- ❑ Slicer Plates: 1/16, 3/32, 1/8, 5/32, 7/32, 3/8, 1/2, 5/8*; 3/16 crimping plate
- ❑ Julienne Plates: 3/32, 3/16, 5/16
- ❑ Dicer Grids: 3/32, 3/8, 1/2, 5/8*, 3/4*; soft dice 5/16, 3/8, 1/2, 5/8

> *NOTE: The 5/8 LOW (15Dice-5/8L) Dicer or 3/4 (15Dice-3/4) Dicer grid should be used with the 5/8 Slicer plate only.

- ❑ Shredder Plates: 1/16, 3/32, 1/8, 3/16, 7/32, 5/16, 3/8
- ❑ Grater Plate: Fine, Extra Fine, Hard
- ❑ Machine Table: Adjustable height table to hold Food Processor
- ❑ Adjustable height stainless steel lug cart
- ❑ Stainless steel receiving pan
- ❑ Plastic receiving pan

MODELS

- ❑ FP150 Continuous Feed Full Hopper Food Processor

Specifications, Details and Dimensions on Inside and Back.

HOBART

FP150 FOOD PROCESSOR

FP150
FOOD PROCESSOR

HOBART
701 S Ridge Avenue, Troy, OH 45374
1-888-4HOBART • www.hobartcorp.com

SOLUTIONS/BENEFITS

Red OFF, Green ON Button
Ease of use
- Operator can readily recognize

Compact Design
Ease of use, small footprint, reduced labor, increased sanitation and productivity
- Occupies minimal counter space
- Unit and receiving pan fit on 23" deep counter
- Plates remove in seconds
- Feed hopper removes without tools for ease of cleaning
- Produces consistent quality product results in seconds
- Production capability for 14 lbs. per minute

Angled Front
Operator convenience, ease of use
- 50° angle for ease of product loading
- Helps to reduce operator fatigue

Planetary Drive
Performance, reliability
- Helps to prevent stalling under heavy loads
- No rest times required between loads

Large Full Size Feed Hopper
Flexibility, convenience, reduced labor
- Supports processing capabilities for large variety of products
- Design permits continuous cutting of long products
- Eliminates precutting

All Aluminum Hopper and Housing
Durability, sanitation
- Anodized finish resists harsh cleaners
- Easy clean up

Double Interlock Switch
Protection
- Prevents machine from running when pusher plate swings away or is open

Plate Speed of 420 RPM
Product quality and consistency
- Precise cutting and dicing action without bruising or mashing of products

Decoring Screw
Quality, consistency
- Deflects products away from the plate hub for complete processing

3 PAK

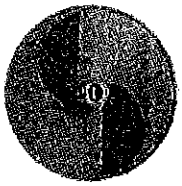
1/16" Slicing Plate

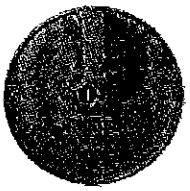
5/32" Slicing Plate

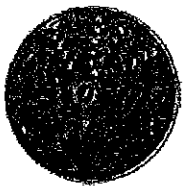
3/16" Shredder Plate

Wall Rack

6 PAK
3 Pack Plus

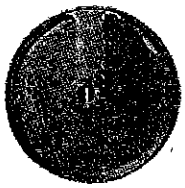
7/32" Slicing Plate

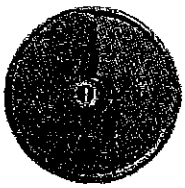
3/8" HD Slicing Plate

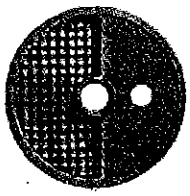
3/8" Dicing Plate

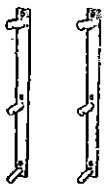
(2) Wall Racks

HOBART
701 S Ridge Avenue, Troy, OH 45374
1-888-4HOBART • www.hobartcorp.com

FP150 FOOD PROCESSOR

SPECIFICATIONS

DESIGN: Compact, conveniently designed at 50° angle for operator convenience. Small base occupies minimal counter space. Carrying handle on back of housing designed for ease of moving unit. Housing constructed of anodized aluminum with rubber feet on base to prevent movement or skidding. Removable feed hopper is burnished aluminum. Cylindrical feed hopper, pusher and deflector plate of acetal thermoplastic.

ELECTRICAL: 120/60/1, 3 Conductor power cord (18 AWG) is 6 feet in length.

MOTOR: 4.8 amps. Planetary gear driven operating at 420 rpm output. ½ H.P. with overload protection.

SWITCHES: Easy to operate (red) OFF and (green) ON switch. Pusher plate and feed hopper interlocks.

STANDARD EQUIPMENT: Basic unit with deflector plate, decoring screw and cleaning brush.

WARRANTY: Unit has full one-year warranty on parts, labor and mileage against manufacturer's defects. Service contracts are available.

CUTTING TOOLS: Slicer, julienne and dicer plates feature cast aluminum plates with cutlery-grade stainless steel knives. Shredder and grater plates feature stainless steel cutting plates with acetal thermoplastic support hubs.

WEIGHT: Net - 39 lbs. Approximate Shipping - 46 lbs.

ASSEMBLY PARTS

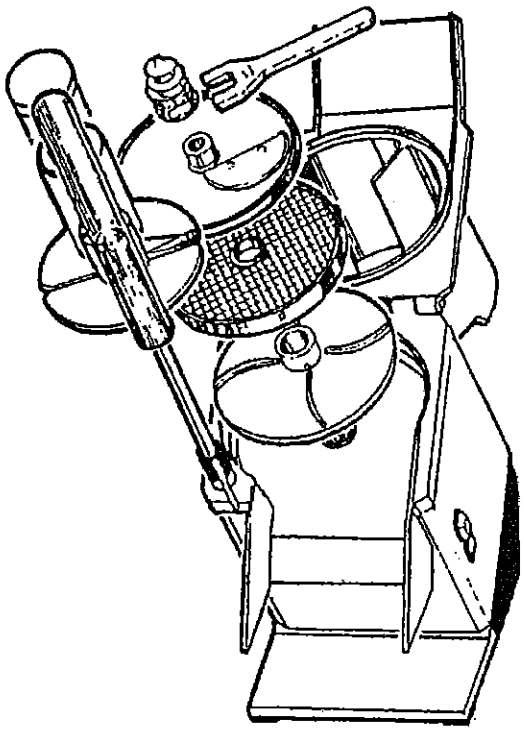

PRODUCT LOADING

Bulk Feeding

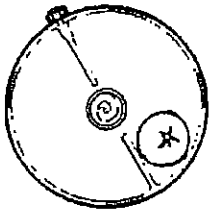

Directional for Definitive Cuts

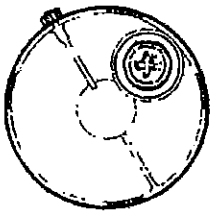

Tube Feeding for Long Products

FP150
FOOD PROCESSOR

HOBART
701 S Ridge Avenue, Troy, OH 45374
1-888-4HOBART • www.hobartcorp.com

DETAILS AND DIMENSIONS

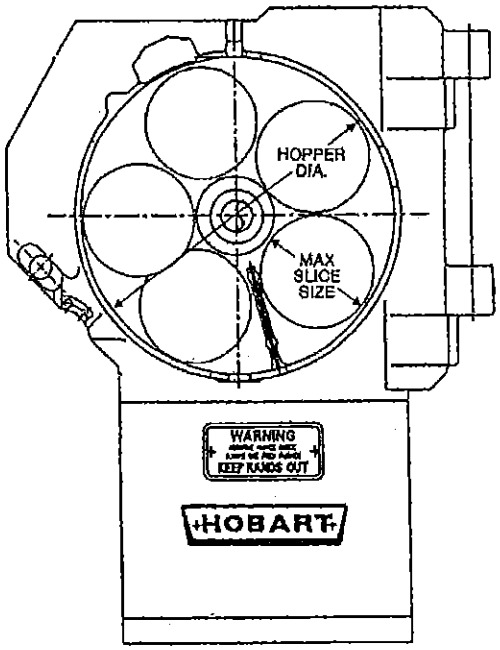

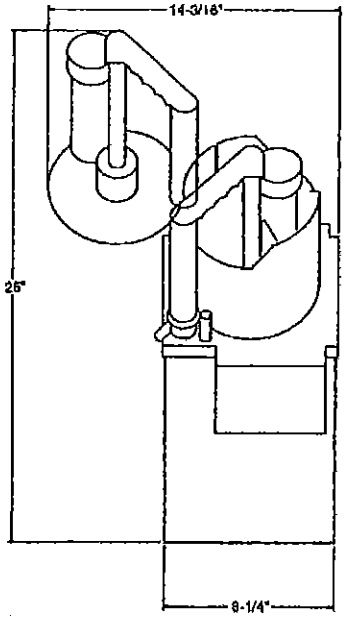

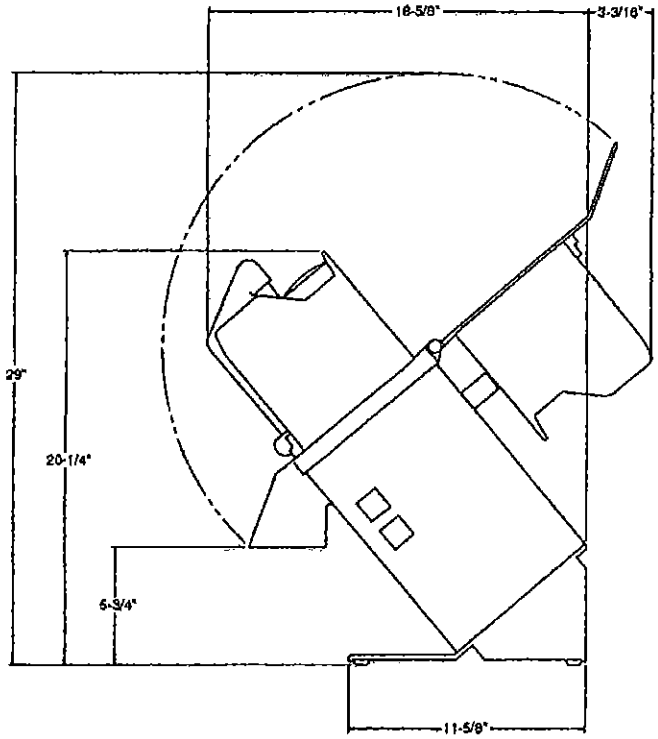

FP150	
Hopper Diameter	6⅜"
Maximum Slice Size	2½"
Usable Depth	6"
Feed Tube Diameter	2⅛"

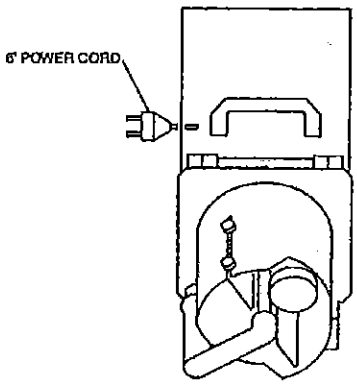

As continued product improvement is a policy of Hobart, specifications are subject to change without notice.