RHODE ISLAND PUBLIC TRANSIT AUTHORITY

705 Elmwood Avenue
Providence, RI 02907

GENERAL GUIDELINES FOR COMPLETING INVITATION FOR BIDS PACKAGE

This document is intended as a guideline to assist prospective Bidders in successfully completing the necessary Bid paperwork. You are strongly encouraged to read the Instructions for Bidders Sections very carefully. This document is NOT intended to replace the more-detailed instructions that are included in the attached Bid Package.

- It is **EXTREMELY IMPORTANT** that all required forms be filled out completely. Federal and State Regulations mandate that these forms be filled out properly. Failure to fill out these forms may result in your Bid being ruled non-responsive. Non Responsive Bids **will not** be awarded the contract.
- **REMEMBER to completely fill out** all REQUIRED FORMS (see REQUIRED FORMS Checklist). The **forms that are checked off are the only ones that apply to this Bid.**
- If a form does not apply to your business or Bid please mark the form Not Applicable or some other similar wording at your discretion.
- DBE (Disadvantaged Business Enterprise) Obligation. RIPTA agrees to ensure that DBES as outlined in 49 CFR Part 26, as amended, have the maximum opportunity to participate in the performance of contracts. Therefore it is imperative that you read the DBE Section and complete the necessary Paperwork. All DBEs submitted must be certified by the State of Rhode Island at the time of Bid submittal.
- Make Sure the Bid Response is received by the RIPTA Purchasing Department by the designated date and time. Late Bids will not be accepted
- It shall be the responsibility of prospective Bidders to check the State of Rhode Island, Department of Administration Division of Purchases Website for any addenda.
- Make Sure that the Bid is returned in an Envelope or Box **CLEARLY LABELED** with the following Information: **Bid Number and what the Bid is for. This information should be in the lower left hand corner**. The envelope should also be labeled **Bid DOCUMENTS ENCLOSED**
- When in doubt, contact RIPTA Contracts Manager (401) 784-9500 extension 214 for assistance.
- **Bid must be submitted pre-punched for standard three ring binders. Spiral bound Bid submittals will not be allowed**. **Please note that United Parcel Service will not deliver to our address**

Please refer to Page 76 for Scope of Work

RHODE ISLAND PUBLIC TRANSIT AUTHORITY

The following label shall be affixed to the envelope or package containing the Bid response documents. It is imperative that his label be affixed to insure the Bid documents are received and routed in the proper manner:

Return Address

_____

_____

_____

BID DOCUMENTS ENCLOSED

CONTRACTS MANAGER
Rhode Island Public Transit Authority
Purchasing Department
Room 217
705 Elmwood Avenue
Providence, RI 02907

BID NUMBER: **14-17**

BID FOR: **Installation of Transit Shelters and Amenities-R Line**

DUE: **March 11, 2014**

RHODE ISLAND PUBLIC TRANSIT AUTHORITY

705 Elmwood Avenue
Providence, RI 02907

REQUIRED COMPANY INFORMATION FORM

The following information is mandatory; Failure to complete this section may jeopardize your eligibility to be awarded the contract. ALL SECTIONS OF THIS FORM MUST BE FILLED OUT COMPLETELY

THIS INFORMATION IS REQUIRED IN ACCORDANCE WITH 49CFR 26.11

THIS FORM IS REQUIRED FOR ALL BIDDERS, PRIME CONTRACTORS, POTENTIAL SUBCONTRACTORS AND SUBCONTRACTORS

PLEASE PRINT OR TYPE YOUR INFORMATION

COMPANY NAME _____

COMPANY STREET: ADDRESS: _____

_____

COMPANY MAILING: ADDRESS: _____

_____

COMPANY CONTACT PERSON:_____

COMPANY TELEPHONE NUMBER:_____

COMPANY TELEFAX NUMBER: _____

COMPANY CONTACT EMAIL: _____

AGE OF THE FIRM (YEARS): _____

ANNUAL GROSS RECEIPTS (DOLLARS):_____

IS YOUR FIRM CERTIFIED BY THE STATE OF RHODE ISLAND AS A DISADVANTAGED BUSINESS ENTERPRISE ? _____

DUNN AND BRADSTREET NUMBER: _____

NAICS CODE: _____**INDUSTRY**_____
NAICS Code can be found at the following website:. www.naics.com

COMPANY STATUS: ____PRIME CONTRACTOR _____SUBCONTRACTOR

RHODE ISLAND PUBLIC TRANSIT AUTHORITY
Invitation for Bids Number 14-17

INVITATION FOR BIDS

BID NO:	**14-17**
DATE OF INVITATION:	**February 10, 2014**
PRE-BID MEETING:	**February 20, 2014**
BID RECEIPT DATE:	**March 11, 2014**
FURNISHING OF:	**Installation of Transit Shelters and Amenities-R Line**

FEDERAL TRANSIT ADMINISTRATION PROJECT NO. **RI90X051 AND RI90XO60**

The participant shall specify the official name of his/her company in the upper left-hand corner of the Bid Response Envelope and show **BID NO: and Bid Description in the lower left-hand corner and send or deliver to**:

Purchasing Department
Room 217
705 Elmwood Avenue
Providence, RI 02907

The participant shall execute the offer form enclosed herewith.

Bids will be reviewed and evaluated; all participants will be notified as soon as approval of award is made.

The Bidder shall execute the offer form enclosed herewith. The Bidder shall return **Four copy(ies)** with the **original** Bid.

RIPTA RESERVES THE RIGHT TO REJECT BIDS FROM PARTICIPANTS WHO HAVE NOT USED THE FORM AND PROPER BID RESPONSE ENVELOPE FORMAT.

RIPTA RESERVES THE RIGHT TO CANCEL ANY PARTICULAR SOLICITATION, AND/OR REJECT ANY OR ALL BIDS.

RHODE ISLAND PUBLIC TRANSIT AUTHORITY
Invitation for Bids Number 14-17
TABLE OF CONTENTS

I.	CALENDAR			1
	A.	Date of Invitation:		1
	B.	Pre-Bid Conference:		1
	C.	Request for Approved equals and Questions		1
	D.	Bid Receipt:		1
II.	NOTICE TO OFFERORS			2
	A.	DATE: February 10, 2014		2
III.	CONTACT LIST			3
	A.	Specifications/Scope of Work		3
	B.	Contracts Manager		3
	C.	RIPTA Compliance Officer		3
IV.	INSTRUCTIONS FOR BIDDERS			4
	A.	Definition of Terms.		4
		1.	Procuring agency	4
		2.	RIPTA	4
		3.	Contractor	4
		4.	Invitation for Bid (IFB)	4
		5.	Authorized Signature.	4
		6.	Invitation for Bid.	4
		7.	Basis of Award	4
		8.	Notice of Award.	4
		9.	Specifications.	4
		10.	Tender	4
	B.	Form of Bid and Signature.		4
		1.	Sole Owner.	5
		2.	General Partnership.	5
		3.	Limited Partnership	5
		4.	Corporation.	5
	C.	Bid.		5
	D.	Unauthorized Conditions.		5
	E.	Submission of Bid.		5
	F.	Modification or Withdrawal of Bid.		5
	G.	Samples		6
	H.	Canvass of Bids.		6
	I.	Rejection of Bids.		6
	J.	Sales Tax Exemption.		6
	K.	Delivery Charges.		6
	L.	Alternative Bid		6
	M.	Non-Collusive Affidavit.		6
	N.	Interest of RIPTA Personnel.		7
	O.	Penalty for Collusion.		7
	P.	Bid Acceptance Period		7
	Q.	Postponement.		7
	R.	Amendment and/or Postponement.		7
	S.	Single Bid.		7
	T.	Qualifications for Award.		8

	U.	Ineligible Bidders.	8
	V.	Disadvantaged Business Enterprise	8
	W.	Addenda.	9
	X.	Bidder's Requests and Appeals.	9
		1. Appointments.	9
		2. Amending Materials.	9
		3. Appeal.	9
		4. Withdrawal.	9
		5. Notification.	9
	Y.	Equal Employment Opportunity.	9
	Z.	Prohibited Interest.	10
	AA.	Interest of Members of Congress.	10
	BB.	Contract Commencement Date.	10
	CC.	Notice, Waiver and Applicable Law.	10
	DD.	Protest.	10
		1. General.	10
	EE.	Protests Before Award	11
		1. Solicitation Phase.	11
		2. Pre-Award Phase.	11
	FF.	Protests After Award.	12
	GG.	Source Selection and Contract Award	12
	HH.	Title VI Assurances	12
	II.	Energy Conservation Requirements:	12
	JJ.	Program Fraud	12
	KK.	No Government Obligation to Third Parties:	13
V.	GENERAL PROVISIONS		13
	A.	Definitions:	13
		1. Authority	13
		2. Contracting Manager	13
		3. Directed, Ordered, designated or prescribed	13
	B.	Changes:	14
	C.	Extras:	14
	D.	Inspection:	14
	E.	Responsible:	15
	F.	Title and Risk of Loss	15
	G.	Payments	15
	H.	Stop Work Order	15
	I.	Disputes	15
	J.	Default	16
	K.	Termination for Convenience of the Authority	17
	L.	Federal, State and Local Taxes	18
	M.	Walsh-Healey Public Contracts Act	18
	N.	Officials Not to Benefit	18
	O.	Covenant against Contingent Fees	18
	P.	Notice to the Authority of Labor Disputes	18
	Q.	Patent Indemnity	19

TABLE OF CONTENTS

R.	Use of Trade Names	19
S.	Rights in Technical Data	19
T.	Audit and Inspection of Records	20
U.	Gratuities	21
V.	Limitation on Withholding Payments	21
W.	New Material	21
X.	Order of Precedence	22
Y.	Correction of Deficiencies	22
	1. Definitions:	22
	2. General:	22
	3. Deficiencies in accepted supplies or services:	22
	4. Correction of Deficiencies by Contractor:	22
	5. Deficiencies in supplies or services not yet accepted:	23
	6. Extensions or Delays	23
	7. Contract Price	23
	8. Failure to correct:	23
Z.	Assignment	24
AA.	Certificates of Current Cost or Pricing Data	24
BB.	Cargo Preference	24
CC.	Buy America Act	25
DD.	Equal Opportunity	25
EE.	Nondiscrimination under Federal Grants	26
FF.	Rights in Data and Copyrights-FTA (June 1996)	26
GG.	Davis-Bacon Act	27
	1. Minimum wages	27
	2. Withholding	30
	3. Payrolls and basic records	30
	4. Apprentices and trainees	32
	5. Compliance with Copeland Act requirements	34
	6. Subcontracts	34
	7. Contract termination: debarment	34
	8. Compliance with Davis-Bacon	34
	9. Disputes concerning labor standards	35
	10. Certification of eligibility.	35
HH.	Contract Work Hours and Safety Standards Act	35
	1. Overtime requirements	35
	2. Violation; liability unpaid wages; liquidated damages	35
	3. Withholding for unpaid wages; liquidated damages	35
	4. Subcontracts	36
	5. Payrolls and basic records	36
	6. Contract Work Hours and Safety Standards Act	36
	7. Subcontracts	37
II.	Seismic Safety Requirements	37
JJ.	Energy Conservation Requirements	37
KK.	Clean Air	37
LL.	Clean Water	38

	MM.	Recovered Materials		38
	NN.	Fly America Requirements		38
	OO.	National Intelligent Transportation Systems Architecture		38
	PP.	Federal Changes		39
	QQ.	Incorporation of Federal Transit Administration (FTA) Terms		39
	RR.	Force Majeure		39
	SS.	Governing Law		39
	TT.	Indemnification		39
	UU.	Policy Concerning Federal and Stated False Claim Laws		40
		1.	Prohibitions Against False Claims	40
		2.	Prohibitions of the Federal False Claims Act	40
		3.	Enforcement	40
	VV.	American with Disabilities Act		40
	WW.	Expense Reimbursement Professional Services Contracts		41
		1.	Automobile mileage	41
		2.	Per Diem Expenses	41
		3.	Lodging	41
		4.	Miscellaneous Expenses	41
		5.	Estimated Expenses	41
VI.	REQUEST FOR APPROVED EQUAL FORM			42
VII.	REQUIRED BID SUBMISSIONS			43
VIII.	SOLICITATION FORM			44
IX.	OFFER FORM			45
X.	STATEMENT OF ELIGIBILITY FORM			46
XI.	AFFIDAVIT OF NON-COLLUSION FORM			47
XII.	CERTIFICATION OF RESTRICTIONS ON LOBBYING FORM			48
XIII.	BUY AMERICA CERTIFICATION REQUIREMENTS I			49
XIV.	BUY AMERICA CERTIFICATION REQUIREMENTS II			50
XV.	BUY AMERICA PRE-AWARD AND POST-DELIVERY AUDITS:			51
	A.	Prior to Contract award,		51
	B.	After delivery and acceptance of the vehicles,		51
	C.	Authority Review		51
XVI.	DISADVANTAGED BUSINESS ENTERPRISES PROGRAM			52
	A.	Policy		52
	B.	DBE Utilization		52
		1.	DBE Utilization	52
	C.	Definitions.		53
		1.	Joint Venture	53
		2.	Disadvantaged Business	53
		3.	Small Business Concern	53
		4.	Socially and Economically Disadvantaged Individuals	53
		5.	Recognition of DBE Commitment	54
		6.	Submissions	54
		7.	Procedure Prior to Contact Award	55
		8.	Bid, Execution & Compliance with Subcontracts	56
		9.	Substitution of Subcontractors	56

TABLE OF CONTENTS

	10.	Program Compliance	56
	11.	Maintenance of Records	57
	12.	Contract Assurance	57
	13.	Prompt Payment	57
	14.	Monitoring Payments to DBEs	57
XVII.	DISADVANTAGED BUSINESS ENTERPRISE REQUIRED FORMS		58
A.	Attachment A		59
B.	Attachment B		60
C.	Attachment C		61
D.	Attachment D.		62
E.	Attachment E		63
F.	Attachment F		64
XVIII.	PERFORMANCE AND PAYMENT BOND INFORMATION		65
XIX.	BID GUARANTEE (SURETY)		65
XX.	REQUIRED INSURANCE		65
A.	Minimum limits		65
B.	Certificate Requirements		65
XXI.	GENERAL CONTRACT COMPLIANCE CERTIFICATE		67
A.	Equal Opportunity Clause		67
B.	Age Discrimination		68
C.	Employment of the Handicapped		68
XXII.	CERTIFICATE OF NON-SEGREGATED FACILITIES		70
XXIII.	NOTICE OF PROSPECTIVE SUBCONTRACTORS		71
A.	Affirmative Action Compliance Program		71
B.	Employer's Information Report (EE)-1) Form 100		71
C.	Notice to All Vendors		71
D.	Post Award Conference		71
XXIV.	GENERAL CONTRACT COMPLIANCE CERTIFICATE		72
XXV.	DAVIS BACON ACT COMPLIANCE		72
XXVI.	CERTIFICATION OF PRIMARY PARTICIPANT FORM		73
XXVII.	DEBARMENT CERTIFICATION		74
XXVIII.	CERTIFICATION OF A SUBCONTRACTOR FORM		74
XXIX.	NON-RESIDENT CONTRACTOR INFORMATION		75
XXX.	DRUG & ALCOHOL TESTING PROGRAM		76
XXXI.	DRUG AND ALCOHOL POLICY ACKNOWLEDGEMENT		76
XXXII.	OVERVIEW		77
XXXIII.	REQUIREMENTS OF THE SUCCESSFUL BIDDER		78
A.	Receiving, Retrieval, and Storage		78
B.	Secure Storage Site		79
C.	Construction/Installation Schedule		80
D.	Site Work and Installation		80
E.	Project Start and Completion Dates		80
F.	Inclement Weather Conditions		80
G.	Liquidated Damages		81
H.	Billing and Payment		81
XXXIV.	BASIS OF AWARD		81

TABLE OF CONTENTS

XXXV. REQUIRED BID SUBMISSIONS 81
A. Number of Copies 81
B. Bid Package Content 81
1. Bid Package Information 81
2. References 81
XXXVI. BASIS OF AWARD 81
XXXVII. BID PRICE SUBMITTAL WORKSHEET. 82
XXXVIII. APPENDIX A: BACKGROUND MATERIALS AND DOCUMENTS 84
XXXIX. APPENDIX B. 85

RHODE ISLAND PUBLIC TRANSIT AUTHORITY
Invitation for Bids Number 14-17

I. CALENDAR

A. Date of Invitation:

February 10, 2014

B. Pre-Bid Conference:

1. **Date:** **February 20, 2014**

2. **Time:** **1:00 p.m. Eastern Time**

3. **Place:** **RIPTA Board Conference Room**
   269 Melrose Street, Providence, RI
   Any and all appeals must be submitted in writing prior to the time and date set for the Pre-Bid Meeting.

C. Request for Approved equals and Questions

must be submitted **ELECTRONICALLY IN MICROSOFT WORD FORMAT** to RIPTA Contracts Manager by:

1. **Date:** **February 20, 2014**

2. **Time:** **1:00 p.m. Eastern Time**

3. **Response to approved equals: 10 - 14 days prior to Bid opening.**

D. Bid Receipt:

1. **Date:** **March 11, 2014**

2. **Time:** **1:00 p.m. Eastern Time**

II. NOTICE TO OFFERORS

A. DATE: February 10, 2014

The Rhode Island Public Transit Authority (RIPTA) is requesting Bids for the following:

Installation of Transit Shelters and Amenities-R Line

All Bids shall be submitted in the required format and quantity as set forth in the IFB. This Bid must be received by March 11, 2014 at 1:00 p.m. Eastern Time by the Purchasing Department, Room 217, 705 Elmwood Avenue Providence, Rhode Island 02907. **Please be advised that United Parcel Service does not deliver to this address.**

Award of contract is subject to financial assistance of 80% from the U.S. Department of Transportation (FTA Project RI90X051 AND RI90XO60) and 20% from RIPTA. The successful Bidder shall comply with the conditions and terms applicable thereunder.

A Pre-Bid Meeting will be held at the RIPTA Transportation Building Conference Room, 269 Melrose Street Providence, RI at 1:00 pm Eastern Time on February 20, 2014.. Bidders are expected to download and review the Bid Scope of Work prior to the pre-Bid meeting. Bidders are expected to view the sites outlined in the Specifications prior to the Pre-Bid Meeting

The successful Bidder shall be required to comply with all applicable Equal Opportunity and Disadvantaged Business Enterprise regulations. Bidders are encouraged to view the Rhode Island Minority Business Enterprise (RIMBE) website for a list of Disadvantaged Business Enterprise vendors that may be interested in working with your company on this Bid. All DBEs submitted must be certified by the State of Rhode Island at the time of Bid submittal.
The RIMBE Website address is: http://www.mbe.ri.gov/search.php.

The Disadvantaged Business Enterprise goal for this project is: 20.%

The successful Bidder shall be required to certify that he is not on the Comptroller General's List of Ineligible Contractors.

An electronic copy of the IFB is available on the State of Rhode Island, Department of Administration, Division of Purchases Website.
The website address is: *www.purchasing.ri.gov/RIVIP/ExternalBidSearch.asp*. RIPTA Requests for Bids can be Public Bid Opportunities, Quasi Public Sector, listed under the Rhode Island Public Transit Authority. ***Bidders must download the Bid documents and complete the required forms.***

If you are unable to access the Internet; a printed copy of the Bid may be obtained from RIPTA's Purchasing Department by calling Michael J. McGrane at (401) 784-9500, ext. 214.

III. CONTACT LIST

PLEASE CONTACT THE FOLLOWING PERSONS FOR ANY QUESTIONS YOU MAY HAVE:

A. Specifications/Scope of Work
Mr. Greg Nordin
Phone (401) 784-9500 extension 239

B. Contracts Manager
Mr. Michael J. M^c^Grane
Phone: (401) 784-9500 extension 214
mmcgrane@ripta.com

C. RIPTA Compliance Officer
Mr. James Vincent
Phone: (401) 784-9500 extension 209
jvincent@ripta.com

IV. INSTRUCTIONS FOR BIDDERS

A. Definition of Terms.

Whenever herein or in the Bid contract documents the following terms, pronouns or abbreviations are used, the intent and meaning shall be interpreted as follows:

1. **Procuring agency**
   Procuring Agency is defined as the Rhode Island Public Transit Authority.
2. **RIPTA**
   RIPTA shall refer to the Rhode Island Public Transit Authority.
3. **Contractor**
   Contractor shall mean the successful Bidder to whom a contract is awarded.
4. **Invitation for Bid (IFB)**
   Invitation for Bid shall mean the complete assembly of related documents, whether attached or incorporated by reference, furnished by RIPTA for the purpose of proposing, including the Invitation for Bid, the Instructions for Bidders, Supplemental Conditions, Specifications, Bid Form, Bid Attachments, and Addenda, if any. Bids shall be in strict accordance with the Terms of the IFB.
5. **Authorized Signature.**
   The person who is executing this contract on behalf of the Bidder and who is authorized to bind the Bidder.
6. **Invitation for Bid.**
   The advertisement of the issuance by RIPTA of a Invitation for Bid, which is published, posted and sent to prospective Bidders informing interested persons of the proposed procurement.
7. **Basis of Award**
   The Contract will be awarded to the responsive, responsible vendor that submits the Bid that is lowest of those submitted.
8. **Notice of Award.**
   The receipt of a Purchase Order or Letter of Contract issued by RIPTA shall serve as notice of the award of contract.
9. **Specifications.**
   The written description and statement of necessary requirements of the equipment/construction, supplies and/or service to be provided.
10. **Tender**
    The Bidder's documents and all attachments tendered in response to the Bid requests.

B. Form of Bid and Signature.

The Bid shall be presented with an original and Four copies on the forms provided herewith by RIPTA and shall be enclosed in a sealed envelope marked and addressed as required on the Bid form.

Depending upon whom the Bid is made by, the following signature and instructions must be followed:

1. **Sole Owner.**
   Bid shall be signed with his full name, and his address shall be given.
2. **General Partnership.**
   Bid shall be signed with the partnership name by a partner who shall also sign his/her own name, and the name and address of each partner shall be given.
3. **Limited Partnership**
   Bid shall be signed with the partnership name by a general partner who has authorization to do so who shall also sign his/her own name.
4. **Corporation.**
   Bid shall be signed by an officer or other individual who has the full and proper authorization to do so, and the corporate seal shall be affixed to the contract, or if the corporate seal is not affixed to the contract and it is signed by a person other than an officer, there must be attached to the contract a certified copy of a resolution of the corporation authorizing such officer or person to sign written contracts for and on behalf of the corporation.

C. Bid.

The terms of the Bid must not be changed. All blank spaces in said form shall be properly filled. Alterations by erasure or interlineation must be explained or noted in the Bid over the signature of the Bidder. If the unit price and the total amount named by a Bidder for any item, do not agree, **the unit price** alone will be considered as representing the Bidder's intention.

D. Unauthorized Conditions.

Unauthorized conditions, limitations or provisions attached to a Bid will render it informal and may cause its rejection.

E. Submission of Bid.

Prior to the hour specified in the Invitation for Bid inviting sealed Bids, all Bids shall be delivered to the Contracts Manager at the address shown in the Invitation for Bid.

Each Bid shall be in a sealed envelope properly labeled on the outside with the Bid number and description. No Bids received after said time or at any place other than the time and place as stated in the Invitation for Bid will be considered. No Bid electronically transmitted , e.g. email and fax will be considered.

F. Modification or Withdrawal of Bid.

A Bid may be modified or withdrawn by written or telegraphic notice received in the office designated in the Invitation for Bid not later than the exact time set for receiving of Bids. A telegraphic notice of modification or withdrawal of a Bid telephoned by the receiving telegraphic office no later than the set for opening of Bids will be considered if the message is confirmed by the telegraph company by sending a copy of a written telegram which formed the basis of the telephone call. A Bid may be

withdrawn in person by a Bidder or his/her authorized representative provided his/her identity is made known and he signs a receipt for the Bid if the withdrawal is prior to the exact time set for receiving the Bids. Modifications of Bids and requests for withdrawal of Bids which are received in the office designated in the Invitation for Bids after the exact time set for opening are "late modifications" and "late withdrawals" respectively. A late modification or late withdrawal will be subject to the rules and procedures applicable to late Bids. A late modification of an otherwise successful Bid will be opened at any time it is received. If, in the judgment of the Director of Procurement, it makes the terms of the Bid more favorable to RIPTA, it will be presented to the Contract Manager and Director of Procurement for consideration.

G. Samples

Samples, when required, must be submitted within the time specified, at no expense to RIPTA. If not, destroyed or used up during testing, samples will be returned upon request at the Bidder's expense.

H. Canvass of Bids.

At the hour specified in the Invitation for Bid, a designee will receive the Bids. An award will be made or Bids rejected by RIPTA within the time specified in the specifications or Bid forms, or if not specified, within a reasonable time after Bids have been opened.

I. Rejection of Bids.

RIPTA reserves the right to reject any and all Bids. The right is reserved to reject any or all Bids, and to waive technical defects as the interest of RIPTA may require. Each Bidder shall be notified if all Bids are rejected.

J. Sales Tax Exemption.

RIPTA confirms there are no state, local or federal taxes applicable to this purchase.

K. Delivery Charges.

Unless otherwise stated in the IFB, Bidders shall include freight and/or delivery charges in the total price of their Bids.

L. Alternative Bid

Submissions of an alternative Bid or Bids, except as specifically called for in the Specifications or IFB, will render the Bid informal and may cause its rejection.

M. Non-Collusive Affidavit.

The Bidder represents and warrants that its Bid is genuine and not sham or collusive or made in the interest or in behalf of any person not therein named, and that the Bidder has not, directly or indirectly, induced or solicited any other Bidder to submit a sham Bid or any other person, firm or corporation to refrain from proposing, and that the Bidder has not in any manner sought by collusion to secure itself an advantage over any other Bidder.

N. Interest of RIPTA Personnel.

The Bidder represents and warrants that neither the General Manager, nor any Board Member, nor any employee of RIPTA, is in any manner interested directly or indirectly in the Bid or in the contract, which may be made under it, or in any expected profits to arise therefrom.

O. Penalty for Collusion.

If at any time it shall be found that the person, firm or corporation to whom a contract has been awarded has, in presenting any Bid or Bids, colluded with any other party or parties, then the contract so awarded shall be **voidable** by RIPTA and the Contractor and his bondsmen shall be liable to RIPTA for all loss or damage which RIPTA may suffer thereby and the RIPTA Board may advertise for a new contract for said labor, supplies, materials, equipment or service.

P. Bid Acceptance Period

All Bids shall remain in effect one hundred twenty (120) calendar days from the date of Bid opening. Bids offering less than one hundred twenty (120) calendar days for acceptance by RIPTA from the date set for opening will be considered non-responsive and will be rejected.

Q. Postponement.

RIPTA reserves the right to postpone, for its own convenience, the date the Bid is to be received, but any Bidder whose Bid has already been submitted to RIPTA when the decision to postpone is made shall be afforded the opportunity to revise or withdraw its Bid.

R. Amendment and/or Postponement.

RIPTA reserves the right to revise or amend the specifications up to the time set for the receiving of Bids. Such revisions and addenda, if any, shall be announced by addenda to this solicitation. **It shall be the responsibility of prospective Bidders to check the State of Rhode Island, Department of Administration Division of Purchases Website for any addenda**. If the revisions and addenda require changes in quantities or price Bid, or both, the date set for receiving Bids may be postponed by such number of days as in the opinion of RIPTA shall enable Bidders to revise their Bids. In any case, Bid openings shall be at least seven (7) working days after the last addendum, and the addenda shall include an announcement of the new date, if applicable.

S. Single Bid.

1. In the event a single Bid is received, RIPTA will, at its option, either conduct a price and/or cost analysis of the Bid and make the award by negotiation or reject the Bid and re-advertise. A price analysis is the process of examining the Bid and evaluating a prospective price without evaluating the separate cost elements. Price analysis shall be performed by comparison of the price quotations submitted on other current quotations, with published price lists, or other established or competitive prices. The comparison shall be made to a purchase of similar quantity and involving similar specifications. Where a difference exists, a

detailed analysis must be made of this difference and costs attached thereto.

2. Where it is impossible to obtain a valid price analysis, it may be necessary for RIPTA to conduct a cost analysis of the Bid price. Cost analysis is the review and evaluation of a contractor's cost or pricing data and of the factors applied in projecting from such data the estimated costs of performing the contract, assuming reasonable economy and efficiency.

3. The price and/or cost analysis shall be made by RIPTA's Procurement Department.

T. Qualifications for Award.

The Bidder must be a person, firm or corporation that:

1. Has in operation, or has the capability to have in operation, a manufacturing plant adequate to assure delivery of all equipment within the time specified under this contract.

2. Has adequate service personnel, or has the capability to have such personnel, to satisfy any service problems that may arise during the warranty period.

3. Has the necessary facilities and financial resources or has the capability to obtain such facilities and resources to complete the contract in a satisfactory manner within the required time.

4. The Procuring agency shall have the right to conduct a pre-award survey on each Bidder. Doubt as to the capability or technical ability, productive capacity or financial strength, which cannot be resolved affirmatively, shall require a determination of non-responsibility by RIPTA.

U. Ineligible Bidders.

The Bidder shall be required to certify, upon request, that it is not on he U.S. Comptroller General's Consolidated List of Persons or Firms currently Debarred for Violations of Various Public Contracts Incorporating Labor Standards Provisions.

V. Disadvantaged Business Enterprise

The Rhode Island Public Transit Authority will not discriminate on the basis of race, color, national origin, or sex in the award and performance of any DOT assisted contract or in the administration of its DBE Program or the requirements of 49 CFR part 26. RIPTA will take all necessary and reasonable steps under 49 CFR part 26 to ensure nondiscrimination in the award and administration of DOT assisted contracts. The recipient's DBE Program, as required by 49 CFR part 26 and as approved by DOT, is incorporated by reference in this agreement. Implementation of this program is a legal obligation and failure to carry out its terms shall be treated as a violation of this agreement. Upon notification to the Rhode Island Public Transit Authority of its failure to carry out its approved

program the Department may impose sanctions as provided for under part 26 and may, in appropriate cases, refer the matter for enforcement under 18 U.S.C. 1001 and/or the Program Fraud Civil Remedies Action of 1986 (31 U.S.C. 3801 et. Seq).

W. Addenda.

RIPTA may issue addenda containing amendments to its Bid solicitation documents. Any addendum issued less than seven (7) days prior to the receipt of Bid shall, if necessary, contain a provision postponing the date of the receipt of Bid to a date that will provide Bidders adequate time to respond to the addenda. Addenda shall be numbered sequentially.

X. Bidder's Requests and Appeals.

1. Appointments.

Bidders and suppliers may make appointments with the contact person listed in the specifications to discuss the specifications.

2. Amending Materials.

Any amending material issued by RIPTA pertaining to the Bid solicitation documents (including, without limitation: clarifications, approved equals, and corrections) shall be set forth in an addendum and sent to all parties who are on record as having obtained a copy of the Bid solicitation documents.

3. Appeal.

Should any Bidder or supplier choose to appeal RIPTA's decision, such appeal must be in writing and received by RIPTA not less than seven (7) calendar days before the date of receipt of Bid. RIPTA has no obligation to consider appeals received less than seven (7) calendar days before the date of the receipt of Bid.

4. Withdrawal.

The Bidder or supplier may withdraw its appeal at any time before RIPTA issues a final decision. There shall be no further review of the appeal after the final decision is issued.

5. Notification.

Should RIPTA postpone the date of the receipt of Bid owing to the appeal, RIPTA shall notify all parties who are on record as having obtained a copy of the Bid solicitation documents that an appeal has been filed and that the date of the receipt of Bid shall be postponed until RIPTA has issued its final decision. RIPTA shall issue appropriate amendments postponing the re-scheduling date of the receipt of Bid.

Y. Equal Employment Opportunity.

In connection with the execution of this contract, the Contractor shall not discriminate against any employee or applicant for employment because of race, religion, color, sex, age, handicap or national origin. The contractor shall take affirmative action to insure that applicants are employed and that employees are treated during their employment, without regard to their race, religion, color, sex, age, handicap or national origin. Such actions shall include, but not limited to, the following: employment, upgrading, demotion, transfer, recruitment or recruitment

advertising, layoff, or termination, rates of pay, or other forms of compensation, and selection for training, including apprenticeship.

Z. Prohibited Interest.
No member, officer, or employee of RIPTA or of a local public body during his tenure or for one year thereafter shall have any interest, directly or indirectly, in this contract or the proceeds thereof.

AA. Interest of Members of Congress.
No member or delegate to the Congress of the United States shall be admitted to any share or part of this contract or to any benefit arising therefrom.

BB. Contract Commencement Date.
The contract commencement date shall be the date of the signing of the Purchase Order or by Letter of Contract signed by an authorized RIPTA employee.

CC. Notice, Waiver and Applicable Law.
Notice given to Contractor and RIPTA shall be given to the parties in writing by certified mail at the respective addresses set forth herein. Waiver by RIPTA of a breach by Contractor of any provision of this contract shall not be deemed a waiver of future compliance therewith, and such provision as well of future provisions hereunder, shall remain in full force and effect. The rights and duties of the parties hereto shall be determined by the laws of the State of Rhode Island, and to that end this agreement shall be considered and construed as a contract made an to be performed in the State of Rhode Island.

DD. Protest.

1. General.
Protests will be accepted from prospective Bidders or Offerors whose direct economic interest would be affected by the award of a Contract or by failure to award a contract. The RIPTA Director of Purchasing will consider all protests or objections filed in a timely manner regarding the award of a contract, whether submitted before or after award. If the protest is oral and the matter cannot be otherwise resolved, written confirmation of the protest will be requested. Protest submissions should be concise, logically arranged, and clearly state the grounds for the protest. Protests must include at least the following information:

a. Name, address and telephone number of protester.

b. Identification of the solicitation or Contract number.

c. A detailed statement of the legal and factual grounds of protest, including copies of relevant documents

d. A statement as to what relief is requested.

e. Protest should be sent to:

Director of Procurement
RI Public Transit Authority
Room 217
705 Elmwood Avenue
Providence, RI 02907

f. Protests must be filed with the RIPTA in accordance with our procedures and time requirements. The protest to RIPTA must be complete and contain all the issues that the protester believes relevant. RIPTA will respond to each substantive issue raised in the protest. Failure to include an issue in the protest eliminates that issue from further consideration. All protest decisions entered by RIPTA are final in accordance with FTA "Third Party Contract" Regulation.

g. On occasion, when considered appropriate, an informal conference on the merits of the protest with all interested parties may be held.

EE. Protests Before Award

1. Solicitation Phase.

Protests concerning the solicitation must be submitted in writing five (5) working days prior to Bid opening or closing date for receipt of Bids. If the written protest is not received by the time specified, award may be made in the normal manner unless the Director of Purchasing, upon investigation, finds that remedial action is required. Oral protests not followed up by a written protest will be disregarded.
Notice of a protest and the basis therefore will be given to all potential Bidders or Offerors.

2. Pre-Award Phase.

When a protest against the making of an award is received after receipt of Bids but prior to award, the Director of Purchasing may determine to withhold the award pending disposition of the protest. The Bidders or Bidders whose Bids might become eligible for award should be requested, before expiration of the time for acceptance of their Bids, to extend the time for acceptance (with consent of sureties, if any) to avoid the need for readvertising. RIPTA will provide a written response to each material issue raised in the written protest.

Where a written protest against the making of an award is received in the time specified, award will not be made prior to five (5) working days after resolution of the protest or, if a protest has been filed with FTA during the pendency of that protest, unless RIPTA determines that:

a. The items to be procured are urgently required;

b. Delivery or performance will be unduly delayed by failure to make award promptly; or,

c. Failure to make award will otherwise cause undue harm to RIPTA or the Federal Government.

If award is made, the Director of Procurement will document the file to explain the need for an award, and will give written notice of the decision to proceed with the award to the protester and, as appropriate, to others concerned.

FF. Protests After Award.

A protest received not later than 10 (ten) working days after award shall be reviewed by the Director of Purchasing. The Contractor will, in any event, be furnished with the notice of protest and the basis therefore. When it appears likely that an award may be invalidated and a delay in receiving the supplies or services is not prejudicial to the Authority's interest, the Director of Purchasing should consider a mutual agreement with the Contractor to suspend performance on a no-cost basis.

GG. Source Selection and Contract Award

The contract shall be awarded with reasonable promptness by written notice to the responsive and responsible Bidder whose Bid will be evaluated using a best value approach. The ultimate selection of an offeror will be on the basis of overall best value to the Authority.

HH. Title VI Assurances

Contractors and subcontractors will be required to comply with all requirements imposed by Title VI of the Civil Rights Act of 1964 (49 U>S>C 2000d), and the Assurances by RIPTA pursuant thereto.

II. Energy Conservation Requirements:

The Contractor agrees to comply with mandatory standards and policies relating to energy efficiency, which are contained in the State of Rhode Island Energy Conservation Plan issued in compliance with the Energy Policy and Conservation Act.

JJ. Program Fraud

1. The Contractor acknowledges that the provisions of the Program Fraud Civil Remedies Act of 1986, as amended, 31 U.S. C. § §3801 et. seq. and U. S. Department of Transportation regulations. “Program Fraud Civil Remedies” 49 C.F. R. Part 31, apply to its actions pertaining to this Project. Upon execution of the underlying contract, the Contractor certifies or affirms the truthfulness and accuracy of any statement it has made , it makes, it may make, or causes to be made, pertaining to the underlying contract or the Federal Transit Administration assisted project for which this contract work is being performed. In addition to other penalties that may be applicable, the Contractor further acknowledges that if it make, or causes to be made, a false , fictitious or fraudulent claim, statement, submission, or certification, the Federal Government reserves the right to impose the penalties of the Program Fraud Civil Remedies Act of 1986 on

the Contractor to the extent the Federal Government deems appropriate.

2. The Contractor also acknowledges that if it makes, or causes to be made, a false, fictitious, or fraudulent claim, statement, submission or certification to the Federal Government under a contract connected with a project that is financed in whole or in part with Federal assistance originally awarded by the FTA under the authority of 49 U.S.C. § 5307, the Government reserves the right to impose the penalties of 18 U.S.C. § 5307 (n) (1) on the Contractor, to the extend the Federal Government deems appropriate.
3. The Contractor agrees to include the above two clauses in each subcontract financed in whole or in part with Federal assistance provided by FTA. It is further agreed that the clauses shall not be modified, except to identify the subcontractor who will be subject to the provisions.

KK. No Government Obligation to Third Parties:

1. The Purchaser and the Contractor acknowledge and agree that, notwithstanding any concurrence by the Federal Government in or approval of the solicitation or award of the underlying contract, absent the express written consent by the Federal Government, the Federal Government is not a party to this contract and shall not be subject to any obligations or liabilities to the Purchaser, Contractor, or any other party (whether or not a party to that contract) pertaining to any matter resulting from the underlying contract.
2. The Contractor agrees to include the above clause in each subcontract financed in whole or in part with Federal assistance provided by FTA. It is further agreed that the clause shall not be modified, except to identify the subcontractor who will be subject to its provisions.

V. GENERAL PROVISIONS

A. Definitions:

As used throughout this Contract, the following terms shall have the meanings set forth below:

1. Authority

Authority means Rhode Island Public Transit Authority (RIPTA).

2. Contracting Manager

the person executing this Contract on behalf of the Authority, and his or her successor, and the term includes, except as otherwise provided in this Contract, the authorized representative of a Contracting Officer acting within the limits of his authority.

3. Directed, Ordered, designated or prescribed

Wherever in the scope of the work the words directed, ordered, designated, prescribed, or words of like importance are used, it shall be understood that the direction, requirement, order, designation, or prescription of the Contracting Manager is intended and similarly the words approved, acceptable,

satisfactory, or words of like importance shall mean approved by, or acceptable to, satisfactory to the Contracting Officer, unless expressly stated.

B. Changes:

The Contracting Officer may at any time, by a written order, and without notice to the sureties, make changes within the general scope of this Contract. If any such changes causes an increase or decrease in the cost of, or the time required for, the performance of any part of the work under this Contract, whether changed or not changed by the order, the Contracting officer shall make an equitable adjustment in the Contract price, the delivery schedule, or both, and shall modify the Contract.

The Contractor must assert its right to an adjustment under this article within 30 days from the date of receipt of the written order. Failure to agree to any adjustment shall be a dispute under the Disputes article. However, nothing in this article shall excuse the Contractor from proceeding with the contract as changed.

C. Extras:

Except as otherwise provided in this Contract, no payment for extras shall be made unless such extras and the price therefore have been authorized in writing in advance by the Contracting Officer.

D. Inspection:

All supplies, which term throughout this article includes without limitation raw materials, components, intermediate assemblies, and end products, shall be subject to inspection and test by the Authority, to the extent practicable at all times and places including the period of manufacture, and in any event prior to acceptance.

In case any supplies or lots of supplies are defective in material or workmanship or otherwise not in conformity within the requirements of this Contract, the Authority shall have the right either to reject them or require their correction. If any inspection or test is made by the Authority on the premises of the Contractor or a subcontractor, the Contractor without additional charge shall provide all reasonable facilities and assistance for the safety and convenience of the Authority inspectors in the performance of their duties.
All inspections and test by the Authority shall be performed in such a manner as not to unduly delay this work. The Authority reserves the right to charge to the Contractor any additional cost of Authority inspection and test when supplies are not ready at the time such inspection and test is requested by the Contractor or when re-inspection or retest is necessitated by prior rejection. Acceptance or rejection of the supplies shall be made as promptly as practicable after delivery, except as otherwise provided in this Contract; but failure to inspect and accept or reject supplies shall neither relieve the Contractor from responsibility for such supplies as are not in accordance with the contract requirements nor impose liability on the Authority therefore. The inspection and test by the Authority of any supplies or lots thereof does not relieve the Contractor from any responsibility regarding defects or other failures to meet the

Contract requirements, which may be discovered prior to acceptance. Except as otherwise provided in this Contract, acceptance shall be conclusive except as regard latent defects, fraud, or such gross mistakes as amount to fraud. The Contractor shall provide and maintain an inspection system acceptable to the Authority covering the supplies hereunder. Records of all inspection work by the Contractor shall be kept complete and available to the Authority during the performance of this Contract and for such longer period as may be specified elsewhere in this Contract.

E. Responsible:

Notwithstanding the requirements for any Authority inspection and test contained in Specifications applicable to this Contract, except where specialized inspections or tests are specified for performance solely by the Authority, the Contractor shall perform or have performed the inspections and tests required to substantiate that the supplies and services provided under the contract conform to the Drawing, Specifications and Contract requirements.

F. Title and Risk of Loss

Unless this Contract specifically provides for earlier passage of title, title to supplies covered by this Contract shall pass to the Authority upon formal acceptance. Unless this Contract specifically provides otherwise, risk of loss of or damage to supplies covered by this Contract shall remain with the Contractor, until acceptance by the Authority.

Notwithstanding the above, the risk of loss of or damage to supplies which so fail to conform to the Contract as to give a right of rejection shall remain with the Contractor until cure or acceptance, at which time the above shall apply.

G. Payments

The Contractor shall be paid, upon the submission of proper invoices or vouchers, the prices stipulated herein for supplies delivered and accepted or services rendered and accepted, less deductions, if any, as specified. The failure to perform may result in partial or full suspension of payment and/or process payment. The Authority's payment terms are 60 days after approval of an invoice unless otherwise negotiated.

H. Stop Work Order

The Contracting Manager may, at any time, by written order to the Contractor, require the Contractor to stop all, or part of the work called for by this Contract. Any such order shall be specifically identified as a STOP WORK ORDER issued pursuant to this article. Upon receipt of such an order, the Contractor shall forthwith comply with its terms and take all reasonable steps to minimize the incurrence of costs allocable to the work covered by the order during the period of work stoppage.

I. Disputes

1. Except as otherwise provided in this Contract, any dispute concerning a question of fact arising under this Contract which is not disposed of by agreement shall be decided by the Contracting

Officer, who shall reduce his decision to writing and mail or otherwise furnish a copy thereof to the Contractor. The decision of the Contracting Officer shall be final and conclusive unless, within 30 days from the date of receipt of such copy, the Contractor mails or otherwise furnishes to the Contracting Officer a written appeal addressed to the General Manager. The decision of the General Manager or his/her duly authorized representative for the determination of such appeals shall be final and conclusive unless determined by a court of competent jurisdiction to have been fraudulent, or capricious, or arbitrary, or so grossly erroneous as necessarily to imply bad faith, or is not supported by substantial evidence. In connection with any appeal proceeding under this article, the Contractor shall be awarded an opportunity to be heard and to offer evidence in support of his appeal. Pending final decision of a dispute hereunder, the Contractor shall proceed diligently with the performance of the contract and in accordance with the Contracting Officer's decision.

2 This **DISPUTES** article does not preclude consideration of questions of law in connection with decisions provided for in paragraph a. above. Nothing in this Contract, however, shall be construed as making the final decisions of the General Manger of his/her representative on a question of law.

J. Default

1. The Authority may, subject to the provisions of paragraph b. below, by written notice of default to the Contractor, terminate the whole or any part of this Contract in any one of the following circumstances:
   a. If the Contractor fails to make delivery of the supplies or to satisfactorily perform the services within the time specified herein or any extension thereof; or
   b. If the Contractor fails to perform any of the other provisions of this Contractor, or so fails to make its terms, and in either of these two circumstances does not cure such failure within a period of 10 days (or such longer period of as the Contracting Officer may authorize in writing) after receipt of notice from the Contracting Officer specifying such failure

2. Default without the fault or negligence of the Contractor. Such causes may include, but are restricted to, acts of God or of the public enemy, acts of the Government in its sovereign capacity or the Authority in its contractual capacity, fires, floods, epidemics, quarantine restrictions, strikes, freight embargoes, and unusually severe weather; but in every case the failure to perform must be beyond the control and without the fault or negligence of the Contractor.

3. If the Contractor fails to deliver the supplies or satisfactorily perform the services within the time specified in this Contract, or any extension thereof, the actual damage to the Authority for the delay will be difficult or impossible to determine. Therefore in lieu

of actual damages, the Contractor shall pay to the Authority as fixed, agreed and liquidated damages for each calendar day of delay, the amount set forth elsewhere in this Contract. The Contractor shall not be charged with liquidated damages when the delay arises out of causes beyond the control and without the fault or negligence of the Contractor, and in such event, subject to this DISPUTES article, the Contracting Officer shall ascertain the facts and extent of the delay and shall extend the time for performance of the contract when in his judgment the findings of fact justify an extension.

4. The rights and remedies of the Authority provided in this article shall not be exclusive and are in addition to any other rights and remedies provided by law or under this Contract.

K. Termination for Convenience of the Authority

The performance of work under this Contract may be terminated by the Authority in accordance with this article in whole, or from time to time in part, whenever the Contracting Officer shall determine that such termination is in the best interest of the Authority. Any such termination shall be effected by delivery to the Contractor of a Notice of Termination specifying the extent to which performance of work under the contract is terminated, and the date upon which such termination becomes effective.

After receipt of a Notice of Termination, the Contractor shall submit to the Contracting Officer his termination claim, in the form and with certification prescribed by the Contracting Officer. Such claims shall be submitted promptly by in no event later than one year from the effective date of termination. Upon failure of the Contractor to submit his termination claim within the time allowed, the Contracting Officer may, subject to any review required by the contracting agency's procedures in effect as of the date of execution of this Contract, determine, on the basis of information available to him, the amount, if any, due the Contractor by reason of the termination and shall thereupon pay to the Contractor the amount so determined.

In the event of the failure of the Contractor and the Contracting Officer to agree upon the whole amount to be paid the Contractor by reason of the termination of work pursuant to this article, the Contracting Officer shall, subject to any review by the contracting agency's procedures in effect as of the date of execution of this Contract, determine, on the basis of information available to him, the amount if any, due the Contractor by reason of the termination.

Costs claimed, agreed to , or determined pursuant to this paragraph shall be in accordance with the applicable with the applicable contract cost principles and procedures of the Federal Acquisition Regulations (48 CFR 31.1) in effect on the date of this Contract. The Contractor shall have the right to appeal, under the DISPUTES article of this Contract from any determination made by the Contracting Officer, except that, if the Contractor has failed to submit his claim within the time provided above and has failed t request extension of such time, he shall have no such

right of appeal. Unless otherwise provided for in this Contract, or by applicable statue, the Contractor, from the effective date of termination and for a period of three years after final settlement under this Contract, shall preserve and make available to the Authority at all reasonable times at the office of the Contractor but without direct charge to the Authority, all his books, records, documents, and other evidence bearing on the costs and expenses of the Contractor under this Contract and relating to the work terminated hereunder, or, to the extent approved by the Contracting Officer, photographs, micro photographs, or other authentic reproductions thereof.

L. Federal, State and Local Taxes

Except as may be otherwise provided in this Contract, the Contract price includes all applicable Federal, State, and Local taxed and duties. The Authority upon the request of the Contractor shall, without further liability, furnish evidence appropriate to establish exemption from any Federal, State, or Local tax.

M. Walsh-Healey Public Contracts Act

If this contract is for the manufacture or furnishing of materials, supplies articles, or equipment in an amount which exceeds or may exceeds or exceed $10,000 and is otherwise subject to the Walsh-Healey Public Contract Act, as amended (41 U.S.C. 34-35), there are hereby incorporated by reference all representations and stipulations required by said Act and regulations issued thereunder by the Secretary of Labor, such representations of the Secretary of Labor which are now or may hereafter be in effect.

N. Officials Not to Benefit

No member, officer, or employee of the Authority during his tenure or one year thereafter shall have any interest, direct or indirect, in this Contract or the proceeds thereof.

O. Covenant against Contingent Fees

The Contractor warrants that no person or selling agency has been employed or retained to solicit or secure this Contract upon an agreement or understanding for a commission, percentage, brokerage, or contingent fee, excepting bona fide employees or bona fide established commercial or selling agencies maintained by the Contractor for the purpose of securing business. For breach or violation of this warranty, the Authority shall have the right to annul this Contract without liability or in its discretion, to full amount of such commission, percentage, brokerage, or contingent fee.

P. Notice to the Authority of Labor Disputes

Whenever the Contractor has knowledge that any or potential labor disputes is delaying or threatens to delay the timely performance of this Contract, the Contractor shall immediately give notice thereof, including all relevant information with respect thereto, to the Contracting Officer. The Contractor agrees to insert the substance of this clause, in any subcontract hereunder as to which a labor dispute may delay the timely performance of this Contract; except that each such subcontract shall

provide that in the event its timely performance is delayed or threatened by delay by any actual or potential labor dispute, the subcontractor shall immediately notify his next higher tier subcontractor, or the Contractor, as the case may be, of all relevant information with respect to such dispute.

Q. Patent Indemnity

1. If the amount of this Contract is in excess of $10,000, the Contractor shall indemnify the Authority and its officers, agents, and employees against liability, including costs, for infringement of any United States letters patent arising out of the manufacture or delivery of supplies under this Contract.
2. In addition, if specifically requested by the Contracting Officer prior to execution of the Contract, a copy of the current license agreement and identification of applicable claims of specific patents shall be furnished.

R. Use of Trade Names

Any trade names used in this document are merely used for a point of reference. The Authority will consider submission of approved equals on any or all products specified. Use of trade names by the Authority bears no actual or implicit approval for the violation of any current or pending patents or copyrights.

S. Rights in Technical Data

1. The Authority shall have the right to use, duplicate or disclose technical data, which includes computer software, in whole or in part, in any manner and for any purpose whatsoever, and to have or permit others to do so:
   a. Any manuals, instructional materials prepared for installation, operation, maintenance or training purposes;
   b. Technical data pertaining to end items, components or processes which were prepared for the purpose of identifying sources, size, configuration, mating and attachment characteristics, functional characteristics and performance requirements ("for, fit and function: data; e/g/ specification control drawing, catalog sheets, outline drawing; except that for computer software it means data identifying source, functional characteristics, and performance requirements but specifically excludes the source code, algorithm, process, formulae, and flow charts of the software);
   c. Other technical data which has been, or is normally furnished without restriction by the Contractor or subcontractor;
   d. Other specifically described technical data, which the parties have agreed will be furnished without restriction.
2. The Authority shall have the right to use, duplicate, or disclose technical data other than that defined in paragraph a. in whole or in part, with the express limitation that such technical data shall not, without the written permission of the party furnishing such technical data, be

a. released or disclosed in part by the Authority for manufacture, or
b. used in whole or in part by the Authority for manufacture, or
c. used by a party other than the Authority except for emergency repair or overhaul work only, by or for the Authority where the item or process concerned is not otherwise reasonably available to enable timely performance of the work; provided, that the release or disclosure thereof outside the Authority shall be made subject to a prohibition against further use, release or disclosure.

3. Technical data provided in accordance with the provisions of paragraph b. shall be identified by a legend, which suitably recites the aforesaid limitation. Nothing herein shall impair the right of the Authority to use similar or identical data acquired from other sources.
4. The term technical data as used in this article means technical writing, computer software, sound recording, pictorial reproductions, drawings, or other representations and works of a technical nature, whether or not copyrighted, which are specified to be delivered pursuant to this Contract. The term does not include financial reports, cost analysis, and other information incidental to Contract administration. Computer software as used in this article means computer programs, computer databases, and documentation.
5. Material covered by copyright:
   a. The Contractor agrees to and does hereby grant to the Authority, and to its officers, agents and employees acting within the scope of their official duties, a royalty-free, nonexclusive and irrevocable license throughout the world for Authority purposes to publish, translate, reproduce, deliver, perform, dispose of, and to authorize others to do so, all technical data now or hereafter covered by copyright.
   b. No such copyright matter shall be included in technical data furnished hereunder without the written permission of the copyright owner for the Authority (or higher-tier contractor) promptly and in reasonable written detail each notice or claim of copyright infringement received by the Contractor with respect to any technical data delivered hereunder.
6. Relation to patents: Nothing contained in this article shall imply a license to the Authority under any patent, or be construed as affecting the scope of any license or other right otherwise granted to the Authority under any patent.
7. Any dispute under this article shall be subject to the Disputes article of this contract

T. Audit and Inspection of Records

The Contractor shall maintain records, and the Contracting Officer, the State of Rhode Island, the U.S. Department of Transportation, and the

Comptroller General of the United States or any of their duly authorized representatives shall, until the expiration of three years after final payment under this Contract, have access to and the right to examine any directly pertinent books, documents, papers and records of such contractor, involving transactions related to the Contract, for the purpose of making audit, examination, excerpts and transactions.

The Contractor further agrees to include in all his subcontracts hereunder a provision to the effect that the subcontractor agrees that the Contracting Officer, the State of Rhode Island, the U.S. Department of Transportation and the Comptroller General of the United States or any of their Duly authorized representatives shall, until the expiration of three years after final payment under the Contract, have access to and the right to examine any directly pertinent books, documents, papers and records of such subcontractor, involving transactions related to the subcontract, for the purpose of making audit, examination, excerpts and transcription.

U. Gratuities

In connection with performance of work required under this Contract, or any changes or modifications relative thereto, the giving of or offering to give gratuities (in the form of entertainment, gifts or otherwise) by the Contractor, or any agent, representative or other person deemed to be acting on behalf of the Contractor, or any supplier or subcontractor furnishing material to or performing work under this Contract, or agent, representative or other person deemed to be acting on behalf of such supplier or subcontractor, to any Director, Officer or employee of the Authority; or to any Director, employee or agent of any of the Authority's agents, consultants, representatives or other persons deemed to be acting for or on behalf of the Authority with a view toward securing a contract or securing favorable treatment with respect to the awarding to the awarding or amending, or the making of any determinations with respect to the performing of such contract is expressly forbidden. The terms of this GRATUITIES article shall be strictly construed and enforced in the event of violations hereto.

V. Limitation on Withholding Payments

If more than one article or schedule provision of this Contract authorized the temporary withholding of amounts otherwise payable to the Contractor for supplies delivered or services performed, the total of the amounts so withheld at any one time shall not exceed the greatest amount which may be withheld under any one such article or schedule provision at that time; provided, that this limitation shall not apply to:

1. Withholdings pursuant to any clause relating to wages or hours of employees;
2. Withholdings not specifically provided for by this Contract; and
3. The recovery of overpayment.

W. New Material

The Contractor represents that the supplies and components to be provided under this Contract are new (not used or reconditioned, and not of such age or so deteriorated as to impair their usefulness or safety).

X. Order of Precedence

In the event of an inconsistency in the Contract, unless otherwise provided herein, the inconsistency shall be resolved by giving precedence in the following order:

1. The Bid Schedule;
2. Special Conditions;
3. General Provisions;
4. The other provisions of the Contract, whether incorporated by reference or otherwise;
5. The Specifications; and
6. Drawings.

Y. Correction of Deficiencies

1. Definitions:

As used in this article:

a. Deficiency means any condition or characteristics in any supplies (which term shall include related technical data) or services furnished hereunder, which is not in compliance with the requirements of this Contract.

b. Correction means any and all actions necessary to eliminate any and all deficiencies.

c. Supplies mean the end item(s) furnished by the Contractor and related services required under this Contract.

2. General:

a. The rights and remedies of the Authority shall not be affected in any way by any other provisions under this Contract concerning the conclusiveness of inspection and acceptance.

b. The Contractor shall not be responsible under this article for the correction of deficiencies caused by the Authority. These shall be no extension in time for performance; no increase in contract price for the correction of deficiencies that are the responsibility of the Contractor, his suppliers, and/or subcontractors.

3. Deficiencies in accepted supplies or services:

If the Contracting Officer determines that a deficiency exists in any of the supplies or services accepted by the Authority under this Contract, he shall promptly notify the Contractor of the deficiency, in writing, within 30 days. Upon timely notification of the existence of such a deficiency, or if the Contractor independently discovers a deficiency in accepted supplies or services, the Contractor shall promptly submit to the Contracting Officer his recommendation for corrective actions, together with supporting information in sufficient detail for the Contracting Officer to determine what corrective action, if any, shall be undertaken.

4. Correction of Deficiencies by Contractor:

The Contractor shall promptly comply with any timely written direction by the Contracting Officer to correct or partially correct a deficiency, at no increase in the Contract price. The Contractor

shall also prepare and furnish to the Authority data and reports applicable to any correction required under this article (including revision and updating of all other affected data called for under this Contract) at no increase in the Contract price.

5. Deficiencies in supplies or services not yet accepted:

If the Contractor becomes aware at any time before acceptance by the Authority (whether before or after tender to the Authority) that a deficiency exists in any supplies or services, he shall promptly correct the deficiency or, if he elects to invoke the procedures in paragraph c. above he shall promptly communicate information concerning the deficiency to the Contracting Officer, in writing, together with his detailed recommendation for corrective action.

6. Extensions or Delays

In no event shall the Authority be responsible for extension or delays in the scheduled deliveries or periods of performance under this Contract as a result of the Contractor's obligations to correct deficiencies, nor shall there be any adjustment of delivery schedule or period of performance as a result of corrections of deficiencies, except as may be agreed to by the Authority in a supplemental agreement with adequate consideration.

7. Contract Price

It is hereby specifically recognized and agreed by the parties hereto that this article shall not be construed as obligating the Authority to increase the Contract price of this Contract.

8. Failure to correct:

If the Contractor fails or refuses to promptly rectify the deficiency the Contracting Officer shall give the Contractor written notice specifying the failure or refusal and setting a period after receipt of the notice within which it must be cured. If the failure or refusal is not cured within the specified period, the Contracting Officer may, by contract or otherwise, as required:

a. Obtain detailed recommendations for corrective action;
b. Correct the supplies or services, or
c. Replace the supplies or services; and if the Contractor fails to furnish timely disposition instructions, the Contracting Officer may dispose of nonconforming supplies for the Contractor’s account in a reasonable manner, in which case the Authority is entitled to reimbursement from the Contractor or from the proceeds for the reasonable expenses of case and disposition, as well as for excess costs incurred or to be incurred; and
d. Obtain applicable data and reports; and charge to the Contractor the cost occasioned the Authority thereby.
e. Impose Liquidated Damages in accordance the terms of this document
f. Terminate the contract. Termination of contract by RIPTA does not relieve the contractor of any liquidated damages imposed by the Authority.

Z. Assignment

1. The Contractor shall not transfer the rights and obligations of the Contract to third parties without the prior written approval of the Authority's Contracting Officer. After review of facts and circumstances without exception the assignment shall not be approved unless the surety, in writing, agrees to that assignment and accepts the assignee as the Contractor and principal on the payment and/or performance bonds.
2. If this Contract provides for payments aggregating $1,000 or more, claims for monies due or to become due the Contractor from the Authority under this Contract may be assigned to a bank, trust company, or other financing institution, including any Federal lending agency, any may thereafter by further assigned and reassigned to any institution. (Notice of such assignment shall be made to the Authority.) Any such assignment or reassignment shall cover all amounts payable under this Contract and not already paid, and shall not be made to more than one party, except that any such assignment or reassignment or reassignment may be made to one party as agent or trustee for two or more parties participating in such financing. It is the Authority's intent to recognize only bona fide lending institutions, therefore, assignment to any private corporation, business or individual, which does not qualify as such, is specifically prohibited.
3. Any attempt to transfer by assignment not authorized by this article shall constitute a breach of the Contract and the Authority may for such cause terminate the right of the Contractor to proceed as provided in the DEFAULT article of these General Provisions, and the Contractor and his sureties shall be liable to the Authority for any excess costs incurred by the Authority.
4. The Rhode Island Public Transit Authority may assign some or all of its rights to purchase the items specified in this contract to one or more third parties, provided, however, that nay such assignment shall not relieve RIPTA of its obligations under this contract unless otherwise agreed to by Contractor in writing.

AA. Certificates of Current Cost or Pricing Data

The Contractor shall provide a Certificate of Current Cost or Pricing Data as required in Subpart 15.804 of the Federal Acquisition Regulations (48 CFR 15.804) in support of any negotiated contract expected to exceed $100,000 any modification to a formally advertised or negotiated contract on which the aggregate of the increase and decrease in cost are expected to exceed $100,000; the Contracting Officer at his discretion may request cost or pricing data for modifications on which cost are $100,000 or less and an attendant certificate of current cost or pricing data.

BB. Cargo Preference

Use of United States Flag Vessels

Pursuant to Pub. L 664 (56 U.S.C. 1241 (b)):
"Cargo Preference-Use of United States-Flag Vessels
The Contractor agrees

1. To utilize privately owned United States-flag commercial vessels to ship at least 50 percent of the gross tonnage (computed separately for dry bulk cargo liners, and tankers) involved, whenever shipping any equipment, materials, or commodities pursuant to this Contract, to the extent such vessels are available at fair and reasonable rates for United States-flag commercial vessels.
2. To furnish within 20 days following the date of loading for shipments originating within the United States, or within 30 working days following the date of loading for shipments originating outside the United States, a legible copy of a rated, "on-board" commercial ocean bill-of-lading in English for each shipment of cargo described in paragraph (1) above to the Grantee (through the prime Contractor in the care of subcontractor bills-of lading) and to the Division of National Cargo, Officer of Market Development, Maritime Administration, Washington, D.C. 20230, marked with appropriate identification of the Project.
3. To insert the substance of the provisions of this clause in all subcontracts issued pursuant to this Contract.

CC. Buy America Act

The Contractor agrees to comply with 49 U.S.C. §533(j), and its implementing regulations at 49 C.F.R. Part 661, any amendments thereto, and any implementing guidelines issued by FTA.

DD. Equal Opportunity

1. Race, Color, Creed, National Origin, Sex.

In accordance with Title VII of the Civil Rights Act, as amended, 42 U.S.C. § 2000e, and Federal transit laws at 49 U.S.C. § 5332, the Contractor agrees to comply with all applicable equal employment opportunity requirements of U.S. Department of Labor (U.S. DOL) regulations, " Office of Federal Contract Compliance Programs, Equal Employment Opportunity, Department of Labor," 41 CFR Parts 60 et seq., (which implements Executive Order No. 11246, "Equal Employment Opportunity," as amended by Executive Order No. 11375, "Amending Executive Order 11246 Relating to Equal Employment Opportunity," 42 U.S.C. § 2000e note), and with any applicable Federal statutes, executive orders regulations, and Federal polices that may in the future affect construction activities undertaken in the course of the Project. The contract agrees to take affirmative action to ensure that applicants are employed, and that employees are treated during employment, without regard to their race, color, creed, national origin, sex, or age. Such action shall include, but not be limited to, the following: employment, upgrading, demotion or transfer, recruitment or recruitment advertising, layoff or termination; rates of pay or other forms of compensation; and selection for training, including apprenticeship. In addition, the Contractor agrees to comply with any implementing requirements FTA may issue.

2. Age

In accordance with section 4 of the Age Discrimination in Employment Act of 1967, as amended, 29, U.S.C. § 623 and Federal Transit Law at 49 U.S.C. § 5332, the Contractor agrees to refrain from discrimination against present and prospective employees for reason of age. In addition, the Contractor agrees to comply with any implementing requirements FTA may issue.

3. Disabilities

In accordance with section 102 of the Americans with Disabilities Act, as amended, 42 U.S.C. § 12112, the Contractor agrees that it will comply with the requirements of U.S. Equal Employment Opportunity Commission, "Regulations to Implement the Equal Employment Provisions of the Americans with Disabilities Act," 29 CFR Part 1630, pertaining to employment of persons with disabilities. In addition, the Contractor agrees to comply with any implementing requirements FTA may issue.

The contractor also agrees to include these requirements in each subcontract financed in whole or in part with Federal assistance provided by FTA, modified only if necessary to identify the affected parties.

EE. Nondiscrimination under Federal Grants

In accordance with Title VI of the Civil Rights Act, as amended, 42 U.S.C. §2000d, section 303 of the Age Discrimination Act of 1975, as amended, 42 U.S.C. §6102, section 202 of the Americans with Disabilities Act of 1990, 42 U.S.C. § 12132, and Federal transit law at 49 U.S.C. § 5332, the Contractor agrees that it will not discriminate against any employee or applicant for employment because of race, color, creed, national origin, sex, age, or disability. In addition, the Contractor agrees to comply with applicable Federal implementing regulations and other implementing requirements FTA may issue.

FF. Rights in Data and Copyrights-FTA (June 1996)

The term "subject data" used in this section means recorded information, whether or not copyrighted, that is delivered or specified to be delivered under this contract. The term includes graphic or pictorial delineation in media such as drawings or photographs; text in specifications or related performance or design-type documents; machine forms such as punched cards, magnetic tape, or computer memory printouts; and information retained in computer memory. Example include, but are not limited to: computer software, engineering drawings and associated lists, specifications, standards, process sheets, manuals, technical reports, catalog item identifications, and related information. The term "subject data" does not include financial reports, cost analyses, and similar information incidental to Project administration.

When the Federal Transit Administration (FTA) provides financial assistance for a planning, research, development, or a demonstration project, it is FTA's general intention to increase mass transportation knowledge, rather than limit the benefits of the Project to participants in the Project. Therefore, unless FTA determines otherwise, the Contractor agrees that FTA may make available to any FTA recipient, subrecipient,

third party contractor, or third party subcontractor, either FTA's license in the copyright to the subject data derived under this contract or a copy of the subject data as defined in subsection a. of this clause and shall be delivered as the Government may direct. Unless prohibited by state law, the Contractor agrees to indemnify, save, and hold harmless RIPTA and the Government, their officers, agents, and employees acting within the scope of their official duties against any liability, including costs and expenses, resulting from any willful or intentional violation by the contractor of proprietary rights, copyrights, or right of privacy, arising out of the publication, translation, reproduction, delivery, use, or disposition of any data furnished under this Contract. The Contractor shall not be required to indemnify RIPTA and the Government for any such liability arising out of the wrongful acts of employees or agents of RIPTA and the Government.

GG. Davis-Bacon Act

40 USC &167; 276a -276a-5 (1998) 29 CFR § 5 (1999)

1. Minimum wages

a. All laborers and mechanics employed or working upon the site of the work (or under the United States Housing Act of 1937 or under the Housing Act of 1949 in the construction or development of the project), will be paid unconditionally and not less often than once a week, and without subsequent deduction or rebate on any account (except such payroll deductions as are permitted by regulations issued by the Secretary of Labor under the Copeland Act (29 CFR part 3)), the full amount of wages and bona fide fringe benefits (or cash equivalents thereof) due at time of payment computed at rates not less than those contained in the wage determination of the Secretary of Labor which is attached hereto and made a part hereof, regardless of any contractual relationship which may be alleged to exist between the contractor and such laborers and mechanics.

Contributions made or costs reasonably anticipated for bona fide fringe benefits under section 1(b)(2) of the Davis-Bacon Act on behalf of laborers or mechanics are considered wages paid to such laborers or mechanics, subject to the provisions of paragraph (1)(iv) of this section; also, regular contributions made or costs incurred for more than a weekly period (but not less often than quarterly) under plans, funds, or programs which cover the particular weekly period, are deemed to be constructively made or incurred during such weekly period. Such laborers and mechanics shall be paid the appropriate wage rate and fringe benefits on the wage determination for the classification of work actually performed, without regard to skill, except as provided in 29 CFR Part 5.5(a)(4). Laborers or mechanics performing work in more than one classification may be compensated at the rate specified for each classification for the time actually worked therein: Provided, That the employer's payroll records accurately set forth the time spent in each classification in which work

is performed. The wage determination and the Davis-Bacon poster (WH-1321) shall be posted at all times by the contractor and its subcontractors at the site of the work in a prominent and accessible place where it can be easily seen by the workers.

b. The contracting officer shall require that any class of laborers or mechanics, including helpers, which is not listed in the wage determination and which is to be employed under the contract shall be classified in conformance with the wage determination. The contracting officer shall approve an additional classification and wage rate and fringe benefits therefore only when the following criteria have been met:

   i. Except with respect to helpers as defined as 29 CFR 5.2(n)(4), the work to be performed by the classification requested is not performed by a classification in the wage determination; and
   ii. The classification is utilized in the area by the construction industry; and
   iii. The proposed wage rate, including any bona fide fringe benefits, bears a reasonable relationship to the wage rates contained in the wage determination; and
   iv. With respect to helpers as defined in 29 CFR 5.2(n)(4), such a classification prevails in the area in which the work is performed.

c. If the contractor and the laborers and mechanics to be employed in the classification (if known), or their representatives, and the contracting officer agree on the classification and wage rate (including the amount designated for fringe benefits where appropriate), a report of the action taken shall be sent by the contracting officer to the Administrator of the Wage and Hour Division, Employment Standards Administration, U.S. Department of Labor, Washington, DC 20210. The Administrator, or an authorized representative, will approve, modify, or disapprove every additional classification action within 30 days of receipt and so advise the contracting officer or will notify the contracting officer within the 30-day period that additional time is necessary.

d. In the event the contractor, the laborers or mechanics to be employed in the classification or their representatives, and the contracting officer do not agree on the proposed classification and wage rate (including the amount designated for fringe benefits, where appropriate), the contracting officer shall refer the questions, including the views of all interested parties and the recommendation of the contracting officer, to the Administrator for determination. The Administrator, or an authorized representative, will issue a determination within 30 days of receipt and so advise the contracting officer or will notify

the contracting officer within the 30-day period that additional time is necessary.

e. The wage rate (including fringe benefits where appropriate) determined pursuant to paragraphs (a)(1)(ii) (B) or (C) of this section, shall be paid to all workers performing work in the classification under this contract from the first day on which work is performed in the classification.

f. Whenever the minimum wage rate prescribed in the contract for a class of laborers or mechanics includes a fringe benefit which is not expressed as an hourly rate, the contractor shall either pay the benefit as stated in the wage determination or shall pay another bona fide fringe benefit or an hourly cash equivalent thereof.

g. If the contractor does not make payments to a trustee or other third person, the contractor may consider as part of the wages of any laborer or mechanic the amount of any costs reasonably anticipated in providing bona fide fringe benefits under a plan or program, Provided, That the Secretary of Labor has found, upon the written request of the contractor, that the applicable standards of the Davis-Bacon Act have been met. The Secretary of Labor may require the contractor to set aside in a separate account assets for the meeting of obligations under the plan or program.

h. The contracting officer shall require that any class of laborers or mechanics which is not listed in the wage determination and which is to be employed under the contract shall be classified in conformance with the wage determination. The contracting officer shall approve an additional classification and wage rate and fringe benefits therefore only when the following criteria have been met:

   i. The work to be performed by the classification requested is not performed by a classification in the wage determination; and

   ii. The classification is utilized in the area by the construction industry; and

   iii. The proposed wage rate, including any bona fide fringe benefits, bears a reasonable relationship to the wage rates contained in the wage determination.

i. If the contractor and the laborers and mechanics to be employed in the classification (if known), or their representatives, and the contracting officer agree on the classification and wage rate (including the amount designated for fringe benefits where appropriate), a report of the action taken shall be sent by the contracting officer to the Administrator of the Wage and Hour Division, Employment Standards Administration, Washington, DC 20210. The Administrator, or an authorized representative, will approve, modify, or disapprove every additional classification action within 30 days of receipt and so advise

the contracting officer or will notify the contracting officer within the 30-day period that additional time is necessary.

j. In the event the contractor, the laborers or mechanics to be employed in the classification or their representatives, and the contracting officer do not agree on the proposed classification and wage rate (including the amount designated for fringe benefits, where appropriate), the contracting officer shall refer the questions, including the views of all interested parties and the recommendation of the contracting officer, to the Administrator for determination. The Administrator, or an authorized representative, will issue a determination with 30 days of receipt and so advise the contracting officer or will notify the contracting officer within the 30-day period that additional time is necessary.

k. The wage rate (including fringe benefits where appropriate) determined pursuant to paragraphs (a)(1)(v) (B) or (C) of this section, shall be paid to all workers performing work in the classification under this contract from the first day on which work is performed in the classification.

2. Withholding

The Rhode Island Public Transit Authority shall upon its own action or upon written request of an authorized representative of the Department of Labor withhold or cause to be withheld from the contractor under this contract or any other Federal contract with the same prime contractor, or any other federally-assisted contract subject to Davis-Bacon prevailing wage requirements, which is held by the same prime contractor, so much of the accrued payments or advances as may be considered necessary to pay laborers and mechanics, including apprentices, trainees, and helpers, employed by the contractor or any subcontractor the full amount of wages required by the contract. In the event of failure to pay any laborer or mechanic, including any apprentice, trainee, or helper, employed or working on the site of the work (or under the United States Housing Act of 1937 or under the Housing Act of 1949 in the Rhode Island Public Transit Authority may, after written notice to the contractor, sponsor, applicant, or owner, take such action as may be necessary to cause the suspension of any further payment, advance, or guarantee of funds until such violations have ceased.

3. Payrolls and basic records

a. Payrolls and basic records relating thereto shall be maintained by the contractor during the course of the work and preserved for a period of three years thereafter for all laborers and mechanics working at the site of the work (or under the United States Housing Act of 1937, or under the Housing Act of 1949, in the construction or development of the project). Such records shall contain the name, address,

and social security number of each such worker, his or her correct classification, hourly rates of wages paid (including rates of contributions or costs anticipated for bona fide fringe benefits or cash equivalents thereof of the types described in section 1(b)(2)(B) of the Davis-Bacon Act), daily and weekly number of hours worked, deductions made and actual wages paid. Whenever the Secretary of Labor has found under 29 CFR 5.5(a)(1)(iv) that the wages of any laborer or mechanic include the amount of any costs reasonably anticipated in providing benefits under a plan or program described in section 1(b)(2)(B) of the Davis-Bacon Act, the contractor shall maintain records which show that the commitment to provide such benefits is enforceable, that the plan or program is financially responsible, and that the plan or program has been communicated in writing to the laborers or mechanics affected, and records which show the costs anticipated or the actual cost incurred in providing such benefits. Contractors employing apprentices or trainees under approved programs shall maintain written evidence of the registration of apprenticeship programs and certification of trainee programs, the registration of the apprentices and trainees, and the ratios and wage rates prescribed in the applicable programs.

b. i. The contractor shall submit weekly for each week in which any contract work is performed a copy of all payrolls to the Rhode Island Public Transit Authority for transmission to the Federal Transit Administration. The payrolls submitted shall set out accurately and completely all of the information required to be maintained under 29 CFR part 5. This information may be submitted in any form desired. Optional Form WH-347 is available for this purpose and may be purchased from the Superintendent of Documents (Federal Stock Number 029-005-00014-1), U.S. Government Printing Office, Washington, DC 20402. The prime contractor is responsible for the submission of copies of payrolls by all subcontractors.

ii. Each payroll submitted shall be accompanied by a "Statement of Compliance," signed by the contractor or subcontractor or his or her agent who pays or supervises the payment of the persons employed under the contract and shall certify the following:
(1) That the payroll for the payroll period contains the information required to be maintained under 29 CFR part 5 and that such information is correct and complete;
(2) That each laborer or mechanic (including each helper, apprentice, and trainee) employed on the

contract during the payroll period has been paid the full weekly wages earned, without rebate, either directly or indirectly, and that no deductions have been made either directly or indirectly from the full wages earned, other than permissible deductions as set forth in Regulations, 29 CFR part 3;
(3) That each laborer or mechanic has been paid not less than the applicable wage rates and fringe benefits or cash equivalents for the classification of work performed, as specified in the applicable wage determination incorporated into the contract.

c. The weekly submission of a properly executed certification set forth on the reverse side of Optional Form WH-347 shall satisfy the requirement for submission of the "Statement of Compliance" required by paragraph (a)(3)(ii)(B) of this section.

d. The falsification of any of the above certifications may subject the contractor or subcontractor to civil or criminal prosecution under section 1001 of title 18 and section 231 of title 31 of the United States Code.

The contractor or subcontractor shall make the records required under paragraph (a)(3)(i) of this section available for inspection, copying, or transcription by authorized representatives of the Federal Transit Administration or the Department of Labor, and shall permit such representatives to interview employees during working hours on the job. If the contractor or subcontractor fails to submit the required records or to make them available, the Federal agency may, after written notice to the contractor, sponsor, applicant, or owner, take such action as may be necessary to cause the suspension of any further payment, advance, or guarantee of funds. Furthermore, failure to submit the required records upon request or to make such records available may be grounds for debarment action pursuant to 29 CFR 5.12.

4. Apprentices and trainees

a. Apprentices - Apprentices will be permitted to work at less than the predetermined rate for the work they performed when they are employed pursuant to and individually registered in a bona fide apprenticeship program registered with the U.S. Department of Labor, Employment and Training Administration, Bureau of Apprenticeship and Training, or with a State Apprenticeship Agency recognized by the Bureau, or if a person is employed in his or her first 90 days of probationary employment as an apprentice in such an apprenticeship program, who is not individually registered in the program, but who has been certified by the Bureau of Apprenticeship and Training or a

State Apprenticeship Agency (where appropriate) to be eligible for probationary employment as an apprentice. The allowable ratio of apprentices to journeymen on the job site in any craft classification shall not be greater than the ratio permitted to the contractor as to the entire work force under the registered program. Any worker listed on a payroll at an apprentice wage rate, who is not registered or otherwise employed as stated above, shall be paid not less than the applicable wage rate on the wage determination for the classification of work actually performed. In addition, any apprentice performing work on the job site in excess of the ratio permitted under the registered program shall be paid not less than the applicable wage rate on the wage determination for the work actually performed. Where a contractor is performing construction on a project in a locality other than that in which its program is registered, the ratios and wage rates (expressed in percentages of the journeyman's hourly rate) specified in the contractor's or subcontractor's registered program shall be observed. Every apprentice must be paid at not less than the rate specified in the registered program for the apprentice's level of progress, expressed as a percentage of the journeymen hourly rate specified in the applicable wage determination. Apprentices shall be paid fringe benefits in accordance with the provisions of the apprenticeship program. If the apprenticeship program does not specify fringe benefits, apprentices must be paid the full amount of fringe benefits listed on the wage determination for the applicable classification. If the Administrator of the Wage and Hour Division of the U.S. Department of Labor determines that a different practice prevails for the applicable apprentice classification, fringes shall be paid in accordance with that determination. In the event the Bureau of Apprenticeship and Training, or a State Apprenticeship Agency recognized by the Bureau, withdraws approval of an apprenticeship program, the contractor will no longer be permitted to utilize apprentices at less than the applicable predetermined rate for the work performed until an acceptable program is approved.

b. Trainees - Except as provided in 29 CFR 5.16, trainees will not be permitted to work at less than the predetermined rate for the work performed unless they are employed pursuant to and individually registered in a program which has received prior approval, evidenced by formal certification by the U.S. Department of Labor, Employment and Training Administration. The ratio of trainees to journeymen on the job site shall not be greater than permitted under the plan approved by the Employment and Training Administration. Every trainee must be paid at not less than the rate specified in the approved program for the trainee's level of progress, expressed as a percentage of the journeyman hourly rate specified in the applicable

wage determination. Trainees shall be paid fringe benefits in accordance with the provisions of the trainee program. If the trainee program does not mention fringe benefits, trainees shall be paid the full amount of fringe benefits listed on the wage determination unless the Administrator of the Wage and Hour Division determines that there is an apprenticeship program associated with the corresponding journeyman wage rate on the wage determination which provides for less than full fringe benefits for apprentices. Any employee listed on the payroll at a trainee rate who is not registered and participating in a training plan approved by the Employment and Training Administration shall be paid not less than the applicable wage rate on the wage determination for the classification of work actually performed. In addition, any trainee performing work on the job site in excess of the ratio permitted under the registered program shall be paid not less than the applicable wage rate on the wage determination for the work actually performed. In the event the Employment and Training Administration withdraws approval of a training program, the contractor will no longer be permitted to utilize trainees at less than the applicable predetermined rate for the work performed until an acceptable program is approved.

c. Equal employment opportunity - The utilization of apprentices, trainees and journeymen under this part shall be in conformity with the equal employment opportunity requirements of Executive Order 11246, as amended, and 29 CFR part 30.

5. Compliance with Copeland Act requirements

The contractor shall comply with the requirements of 29 CFR part 3, which are incorporated by reference in this contract.

6. Subcontracts

The contractor or subcontractor shall insert in any subcontracts the clauses contained in 29 CFR 5.5(a)(1) through (10) and such other clauses as the Federal Transit Administration may by appropriate instructions require, and also a clause requiring the subcontractors to include these clauses in any lower tier subcontracts. The prime contractor shall be responsible for the compliance by any subcontractor or lower tier subcontractor with all the contract clauses in 29 CFR 5.5.

7. Contract termination: debarment

A breach of the contract clauses in 29 CFR 5.5 may be grounds for termination of the contract, and for debarment as a contractor and a subcontractor as provided in 29 CFR 5.12.

8. Compliance with Davis-Bacon and Related Act requirements

All rulings and interpretations of the Davis-Bacon and Related Acts contained in 29 CFR parts 1, 3, and 5 are herein incorporated by reference in this contract.

9. Disputes concerning labor standards

Disputes arising out of the labor standards provisions of this contract shall not be subject to the general disputes clause of this contract. Such disputes shall be resolved in accordance with the procedures of the Department of Labor set forth in 29 CFR parts 5, 6, and 7. Disputes within the meaning of this clause include disputes between the contractor (or any of its subcontractors) and the contracting agency, the U.S. Department of Labor, or the employees or their representatives.

10. Certification of eligibility.

a. By entering into this contract, the contractor certifies that neither it (nor he or she) nor any person or firm who has an interest in the contractor's firm is a person or firm ineligible to be awarded Government contracts by virtue of section 3(a) of the Davis-Bacon Act or 29 CFR 5.12(a)(1).

b. No part of this contract shall be subcontracted to any person or firm ineligible for award of a Government contract by virtue of section 3(a) of the Davis-Bacon Act or 29 CFR 5.12(a)(1).

c. The penalty for making false statements is prescribed in the U.S. Criminal Code, 18 U.S.C. 1001

HH. Contract Work Hours and Safety Standards Act

40 U.S.C. 327-333 (1995) 29C.F.R. 5 (1995) 29 C.F.R. 1926 (1995)

1. Overtime requirements

No contractor or subcontractor contracting for any part of the contract work which may require or involve the employment of laborers or mechanics shall require or permit any such laborer or mechanic in any workweek in which he or she is employed on such to work in excess of forty hours in such workweek unless such laborers or mechanics receive compensation at a rate not less than one and one-half times the basic rate of pay for all hours worked in excess of forty hours in such workweek.

2. Violation; liability unpaid wages; liquidated damages

In the event of any violation of the clauses set forth in paragraph (1) of this section the contractor and any subcontractor responsible therefore shall be liable for the unpaid wages. In addition, such contractor and subcontractor shall be liable to the United States for liquidated damages. Such liquidated damages shall be computed with respect to each individual laborer or mechanic, including watchmen and guards, employed in violation of the clauses set forth in paragraph (1) of this section, in the sum of $10 for each calendar day on which such individual was required or permitted to work in excess of the standard workweek of forty hours without payment of the overtime wages required by the clauses set forth in paragraph (1) of this section.

3. Withholding for unpaid wages; liquidated damages

The Rhode Island Public Transit Authority shall upon its own action or upon written request of an authorized representative of the Department of Labor withhold or cause to be withheld, from any moneys payable on account of work performed by the

contractor or subcontractor under any such contract or any other Federal contract with the same prime contractor, or any other federally-assisted contract subject to the Contract Work Hours and Safety Standards Act, which is held by the same prime contractor, such sums as may be determined to be necessary to satisfy any liabilities of such contractor or subcontractor for unpaid wages and liquidated damages as provided in the clauses set forth in paragraph (2) of this section.

4. Subcontracts

The contractor or subcontractor shall insert in any subcontracts the clauses set forth in this section and also a clause requiring the subcontractors to include these clauses in any lower tier subcontracts. The prime contractor shall be responsible for compliance by any subcontractor or lower tier subcontractor with the clauses set forth in this section. (Section 102 nonconstruction contracts should also have the following provision:)

5. Payrolls and basic records

Payrolls and basic records relating theretoshall be maintained by the contractor during the course of the work and preserved for a period of three years thereafter for all laborers and mechanics working at the site of the work (or under the United States Housing Act of 1937, or under the Housing Act of 1949, in the construction or development of the project). Such records shall contain the nams, address, and social security number of each worker, his or her correct classification, hourly rates of wages paid (including rates of contributions or costs anticipated for bona fide fringe benefits or cash equivalents thereof of the types described in section 1(b)(2)(B) of the Davis-Beacon Act), daily and weekly number of hours worked, deductions. Whenever the made and actual wages paid Secreary iof labor has found under 29 CFR 5.5 (a)(1)(iv) that the wages of any laborer or mechanic included the amount of any costs reasonably anticipated in providing benefits under a plan or program described in section 1(b)(2)(B) of the Davis-Beacon Act, the contractor shall maintain records which show that the commitment to provide such benefits is enforceable, that the plan or program is financially responsible, and that the plan or program has been communicated in writing to the laborers or mechanics affected, and records which show the costs anticipated or the actual cost incurred in providing such benefits. Contractors employing apprentices or trainees under approved programs shall maintain written evidence of the regisration of apprenticeship programs and certification of trainee programs, the registration of the apprentices and trainees, and the ratios and wage rates prescribed in the applicable programs.

6. Contract Work Hours and Safety Standards Act

The contractor agrees to comply with section 107 of the Contract Work Hours and Safety Standards Act, 40 U.S.C. section 333, and applicable DOL regulations, “Safety and Health Regulations for Construction” 29 C.F.R. Part 1926. Among other things, the Contractor agrees that it will not require any laborer of mechanic to work in unsanitary, hazardous, or dangerous surroundings or working conditions.

7. **Subcontracts**

The Contractor also agrees to include the requirements of the section in each. The term "subcontract" under this section is considered to refer to a person who agrees to perform any part of the labor or material requirements of a contract for construction, alteration or repair. A person who undertakes to perform a portion of a contract involving the furnishing of supplies or materials will be considered a "subcontractor" under this section if the work in question involves the performance of construction work and is to be performed: (1) directly on or near the construction site, or (2) by the employer for the specific project on a customized basis. Thus, a supplier of materials, which will become an integral part of the construction is a "subcontractor" if the supplier fabricates or assembles the goods or materials in question specifically for the construction project and the work involved may said to be construction activity. If goods or materials in question are ordinarily sold to other customers from regular inventory, the supplier is not a "subcontractor." The requirements of this section do not apply to contracts or subcontracts for the purchase of supplies or materials or articles normally available on the open market.

II. Seismic Safety Requirements

42 U.S.C. 7701 et seq. 49 CFR Part 41

The contractor agrees that any new building or addition to an existing building will be designed and constructed in accordance with the standards for Seismic Safety required in Department of Transportation Seismic Safety Regulations 49 CFR Part 41 and will certify to compliance to the extent required by the regulation. The contractor also agrees to ensure that all work performed under this contract including work performed by a subcontractor is in compliance with the standards required by the Seismic Safety Regulations and the certification of compliance issued on the project.

JJ. Energy Conservation Requirements

42 U.S.C. 6321 et seq. 49 CFR Part 18

The contractor agrees to comply with mandatory standards and policies relating to energy efficiency, which are contained in the state energy conservation plan issued in compliance with the Energy Policy and Conservation Act.

KK. Clean Air

42 U.S.C. 7401 et Seq 40 CFR 15.61 49 CFR Part 18

1 The Contractor agrees to comply with all applicable standards, orders or regulations issued pursuant to the Clean Air Act, as amended, 42 U.S.C. §§ 7401 et Seq . The Contractor agrees to report each violation to the Purchaser and understands and agrees that the Purchaser will, in turn, report each violation as required to assure notification to FTA and the appropriate EPA Regional Office.

2. The Contractor also agrees to include these requirements in each subcontract exceeding $100,000 financed in whole or in part with Federal assistance provided by FTA.

LL. Clean Water

1 The Contractor agrees to comply with all applicable standards, orders or regulations issued pursuant to the Federal Water Pollution Control Act, as amended, 33 U.S.C. 1251 et Seq . The Contractor agrees to report each violation to the Purchaser and understands and agrees that the Purchaser will, in turn, report each violation as required to assure notification to FTA and the appropriate EPA Regional Office.

2 The Contractor also agrees to include these requirements in each subcontract exceeding $100,000 financed in whole or in part with Federal assistance provided by FTA.

MM. Recovered Materials

The contractor agrees to comply with all the requirements of Section 6002 of the Resource Conservation and Recovery Act (RCRA), as amended (42 U.S.C. 6962), including but not limited to the regulatory provisions of 40 CFR Part 247, and Executive Order 12873, as they apply to the procurement of the items designated in Subpart B of 40 CFR Part 247.

NN. Fly America Requirements

The Contractor agrees to comply with 49 U.S.C. 40118 (the “Fly America” Act) in accordance with the General Services Administration’s regulations at 41 CFR Part 301-10, which provide that recipients and subrecipients of Federal funds and their contractors are required to use U.S. Flag air carriers for U.S Government-financed international air travel and transportation of their personal effects or property, to the extent such service is available, unless travel by foreign air carrier is a matter of necessity, as defined by the Fly America Act. The Contractor shall submit, if a foreign air carrier was used, an appropriate certification or memorandum adequately explaining why service by a U.S. flag air carrier was not available or why it was necessary to use a foreign air carrier and shall, in any event, provide a certificate of compliance with the Fly America requirements. The Contractor agrees to include the requirements of this section in all subcontracts that may involve international air transportation.

OO. National Intelligent Transportation Systems Architecture and Standards

The Contractor agrees to conform, to the extent applicable, to the National Intelligent Transportation Systems (ITS) Architecture and Standards as required by section 5206(e) of TEA-21, 23 U.S.C. § 502 note, and comply with FTA Notice, "FTA National ITS Architecture Policy on Transit Projects" 66 Fed. Reg. 1455 *et seq*., January 8, 2001, and other Federal requirements that may be issued

PP. Federal Changes

Contractor shall at all times comply with all applicable FTA regulations, policies, procedures and directives, including without limitation those listed directly or by reference in the Agreement (Form FTA MA (9) dated October, 2002) between Purchaser and FTA , as they may be amended or promulgated from time to time during the term of this contract. Contractor's failure to so comply shall constitute a material breach of this contract.

QQ. Incorporation of Federal Transit Administration (FTA) Terms

The preceding provisions include, in part, certain Standard Terms and Conditions required by DOT, whether or not expressly set forth in the preceding contract provisions. All contractual provisions required by DOT, as set forth in FTA Circular 4220.1D, dated April 15, 1996, are hereby incorporated by reference. Anything to the contrary herein notwithstanding, all FTA mandated terms shall be deemed to control in the event of a conflict with other provisions contained in this Agreement. The Contractor shall not perform any act, fail to perform any act, or refuse to comply with any (name of grantee) requests, which would cause (name of grantee) to be in violation of the FTA terms and conditions.

RR. Force Majeure

Neither Party shall be liable to the other Party for failure of or delay in performance of any obligation under this Agreement, directly or indirectly, owing to war, acts of terrorism, acts of God, embargoes, riots, strike and other events beyond its reasonable control, the effect of which, by the exercise of reasonable diligence, the non-performing party could not avoid. In the event that such failure or delay occurs, the affected Party shall notify the other Party of the occurrence thereof as soon as possible and the Parties shall discuss the best way to resolve the event of force majeure.

Neither party shall, however, be excused from performance if nonperformance is due to forces which are preventable, removable, or remediable and which the non-performing party could have, with the exercise of reasonable diligence, prevented, removed, or remedied with reasonable dispatch. The non-performing party shall within a reasonable time of being prevented or delayed from performance by an uncontrollable force, give written notice to the other party describing the circumstances and uncontrollable forces preventing continued performance of the obligations of this Agreement. “

SS. Governing Law

The Contract shall be interpreted under and its performance governed by the laws of the State of Rhode Island.”

TT. Indemnification

Bidders shall indemnify and hold harmless, the State of Rhode Island, all departments and division thereof and the Rhode Island Public Transit Authority from all liability, and said indemnification shall cover and include

any and all aspects of liability arising from any lawsuit pertaining to the execution of this contract.

UU. Policy Concerning Federal and Stated False Claim Laws

As required by 42 U.S.C. §1396a(a)(68), the Rhode Island Public Transit Authority ("RIPTA") publishes the following information to all employees, contractors and agents about federal and state False Claims laws and RIPTA's policies to detect and prevent fraud, waste and abuse.

1. Prohibitions Against False Claims

Federal False Claims Act

The federal False Claims Act, among other things, applies to the submission of claims for payment by Medicare, Medicaid and other federal and state programs. The False Claims Act is the federal government's primary civil remedy for improper or fraudulent claims. It applies to all federal programs, including welfare and health care benefits.

2. Prohibitions of the Federal False Claims Act

The False Claims Act prohibits, among other things:

a knowingly presenting or causing to be presented to the federal government a false or fraudulent claim for payment or approval;

b knowingly making or using, or causing to be made or used, a false record or statement in order to have a false or fraudulent claim paid or approved by the government;

c conspiring to defraud the government by getting a false or fraudulent claim allowed or paid; and

d knowingly making or using, or causing to be made or used, a false record or statement to conceal, avoid, or decrease an obligation to pay or transmit money or property to the government.

"Knowingly" means that a person, with respect to information: (1) has actual knowledge of the information; (2) acts in deliberate ignorance of the truth or falsity of the information; or (3) acts in reckless disregard of the truth or falsity of the information, and no proof of specific intent to defraud is required.

3. Enforcement

The United States Attorney General may bring civil actions for violations of the False Claims Act. As with most other civil actions, the government must establish its case by presenting only a preponderance of the evidence rather than by meeting the higher burden of proof that applies in criminal cases.

The False Claims Act allows private individuals to bring "qui tam" actions for violations of the Act.

VV. American with Disabilities Act

All products, equipment or construction provided in accordance with this contract shall comply with the current version of the Americans with Disabilities Act of 1990 - 42 U.S.C. 12101, et seq. at the time of the solicitation.

WW. Expense Reimbursement Professional Services Contracts

The following methods of Reimbursement of Expenses directly related to the performance of this contract shall be utilized. Any expenses incurred must be improved by the RIPTA Project Manager in writing before they occur. The vendor is responsible to submit sufficient documentation to allow the Authority to verify the expenses.

1. Automobile mileage

Travel mileage will be reimbursed at the rate approved by the Internal Revenue Service at the time the travel is incurred.

2. Per Diem Expenses

Meals will be reimbursed at the rates established by the General Services administration for the City of Providence or Newport, which is applicable to the RIPTA Project. The applicable Per Diem rates can be found at the following website: **www.gsa.gov** . A copy of the print out of the GSA website documenting the applicable per diem rate must be attached to the invoice.

3. Lodging

Lodging will be reimbursed at the rates established by the General Services administration for the City of Providence or Newport, which is applicable to the RIPTA Project. The applicable Per Diem rates can be found at the following website: **www.gsa.gov** . A copy of the print out of the GSA website documenting the applicable per diem rate must be attached to the invoice

4. Miscellaneous Expenses

Materials used in conjunctions with this contract shall be provided at cost plus the following (applicable) fee for Overhead, Pickup and Delivery. No additional charges will be acceptable

Material Cost	Overhead Fee
$0-500	No Fee
$501-750	$75.00
$751-1000	$100.00
$1001-1500	$125.00
$1501-$2500	$180.00
$2501-5000	$300.00
$5001-7500	$450.00
Over 7501.	$525.00

Copies of Receipts must be submitted to verify Miscellaneous Expenses.

5. Estimated Expenses

Proposers are required to submit an accurate list of projected expenses that may be necessary to properly execute the Scope of Services of this Contract. This must be submitted with the Proposal submittal.

VI. REQUEST FOR APPROVED EQUAL FORM

This form must be submitted electronically IN MICROSOFT WORD FORMAT TO RIPTA CONTRACTS MANAGER

REQUEST FOR APPROVAL EQUAL QUALIFICATION OR CLARIFICATION

Page:_____ **Ref: IFB NO. 14-17**
Project No._____

To: Rhode Island Public Transit Authority

From: _____

Page & Reference:_____

Request Description

Use Additional Sheet If More Space Is Required

Accepted:_____ Rejected:_____ See Addendum #_____

Explanation:_____

VII. REQUIRED BID SUBMISSIONS

The following items marked with an "X" must be submitted with Response
Failure to submit forms may result in Bid being deemed non-responsive

Required Company Information Form **Must be completed by Prime and All Subcontractors**	X
Solicitation	X
Offer	X
Statement of Eligibility	X
Affidavit of Non-Collusion	X
Certification of Restrictions on Lobbying	X
Buy America Certificate **FORM MUST BE SUBMITTED WITH BID, IF CHECKED, OR BID WILL BE CONSIDERED NON RESPONSIVE**	X
Disadvantaged Business Enterprise	X
General Contract Compliance Certificate Agreement (EEO)	X
Certification of Primary Participant Debarment	X
Certification of a Subcontractor (Debarment) **Each Subcontractor and potential subcontractor** must fill in and sign.	X
Non-Resident Contractor (if applicable)	X
Davis Bacon Act Compliance Applicable Type: (**X**)Building ( ) Highway Wage Determination Number: **RI20130001 01/24/2014 MOD 01**	
Drug & Alcohol Testing	X
Bid Guarantee (Surety)	X

The following items marked with an "X" must be submitted AFTER AWARD of the Contract

Performance and Payment Bonds	X
Certificate of Insurance- (as required in Section XX and the Scope of Work)	X

NOTE:
ITEMS WITHOUT AN "X" AND THEIR RESPECTIVE TERMS AND CONDITIONS ARE NOT REQUIRED IN THIS BID

VIII. SOLICITATION FORM

COMPANY NAME _____

BID NO. OR PROJECT NO. **14-17**

DESCRIPTION **Installation of Transit Shelters and Amenities-R Line**

A. BID REQUIREMENTS

Sealed Bids in original and Four copy(ies) will be received at the offices of the Rhode Island Public Transit Authority, 705 Elmwood Avenue Providence, Rhode Island 02907, at the Bid date and hour set forth on the Invitation for Bid or anytime prior to the date and hour. Late Bids will not be accepted.

B. CONTRACT DOCUMENTS

By executing the offer form enclosed herewith, the Bidder agrees to provide all services set forth on the specifications attached hereto upon the terms and conditions set forth in paragraphs A, B, C and D.

C. PAYMENT SCHEDULE

Payment will not be made until receipt and installation of merchandise is accepted by the Transit Authority.

D. COST FOR SERVICE

Please complete necessary cost information as outlined in the Bid Scope of Work.

IX. OFFER FORM

Bidder understands that any condition other than stated in the specifications, clarification made to the above, or information submitted on or with this form, other than that requested, may render the Bid non-responsive.

By execution below, Bidder hereby offers to furnish services in accordance with the contract documents that are a part of the specifications, and agrees to fully comply with the contract documents.

BID NO 14-17

BIDDER _____

EMPLOYER IDENTIFICATION NO. _____

NAME_____

ADDRESS_____

CITY/STATE/ZIP_____

TYPE OF BUSINESS ENTITY: (Please check one)

Sole Proprietor _____
Partnership _____
Corporation _____

BIDDER'S CONTRACTING OFFICER

_____
Name *(Please Print)*

_____
Authorized Signature

_____
Title

X. STATEMENT OF ELIGIBILITY FORM

The _____hereby certifies that he/she
(Name of Bidder)
is/is not (underscore one) included on the Comptroller General's Lists of Persons or Firms Currently Barred for Violations of Various Public Contracts Incorporating Labor Standards Provisions.

_____
Name of Firm

_____
Address

_____
City, State, Zip

_____
Signature of Authorized Person

_____
Date Authorized

XI. AFFIDAVIT OF NON-COLLUSION FORM

I hereby swear (or affirm) under penalty for perjury:

1. that I am the Bidder (if the Bidder is an individual), a partner of the Bidder (if the Bidder is partnership), or an officer or employee of the proposing corporation having authority to sign on its behalf (if the Bidder is a corporation).

2. that the attached Bid has been arrived at by the Bidder independently, and has been submitted without collusion with, and without agreement, understanding, or planned common course of action with, any other vendor of materials, supplies, equipment, services described in Invitation for Bids, designed to limit independent bidding or competition.

3. that the contents of the Bid has not been communicated by the Bidder or its employees or agents, to any person not an employee or agent of the Bidder or its surety on any bond furnished with the Bid, and will not be communicated to any such person prior to the official opening of the Bid; and

4. that I have fully informed myself regarding the accuracy of the statement made on this affidavit.

_____
Name

_____
Address

_____
City, State, Zip

_____
Signature of Authorized Official

_____
Date Authorized

Subscribed and sworn before me this _____ day of _____,20____

Notary Public

My commission expires _____

XII. CERTIFICATION OF RESTRICTIONS ON LOBBYING FORM

I,_____, hereby certify on
(Name/title of Bidder Authorized Official)

behalf of: _____that:
(Name of Bidder)

1) No Federal appropriated funds have been paid or will be paid, by or on behalf of the undersigned, to any person for influencing or attempting to influence an officer or employee of any agency, a Member of Congress, an officer or employee of Congress, or an employee of a member of Congress in connection with the awarding of any Federal contract, the making of any Federal grant, the making of any Federal loan, the entering into of any cooperative agreement, and the extension, continuation, grant, loan, or cooperative agreement.

2) If any funds other than Federal appropriated funds have been paid to any person for influencing or attempting to influence an officer or employee of any agency, a Member of Congress, or an employee of a member of Congress in connection with this Federal contract, loan, or cooperative agreement, the undersigned shall complete and submit Standard Form-LLL, “Disclosure Form to Report Lobbying”, in accordance with its instructions.

3) The undersigned shall require that the language of this certification be included in the award documents for all sub-awards at all tiers (including subcontracts, sub-grants, and contracts under grants, loans, and cooperative agreements) and that all sub-recipients shall certify and disclosure accordingly.

This certification is a material representation of fact upon which reliance is placed when this transaction was made or entered into. Submission of the certification is a prerequisite for making or entering into this transaction imposed by Section 1352, Title 31, U.S. Code. Any person who fails to file the required certification shall be subject to a civil penalty of not less than $10,000 and not more than $100,000 for each such failure.

Executed this _____ day of _____, 20_____.

By _____
(Signature of Authorized Official)

XIII. BUY AMERICA CERTIFICATION REQUIREMENTS I FOR PROCUREMENT OF STEEL OR MANUFACTURED PRODUCTS

49 U.S.C. 5323(j) and 49 CFR 661 provide that no Federal funds may not be obligated for mass transportation projects unless steel and manufactured products used in these projects are produced in the United States.

If steel or manufactured products are being procured, the appropriate certificate as set forth below shall be completed and submitted by each Bidder.

Certificate of Compliance-The Bidder hereby certifies that it will comply with the requirements of 49 U.S.C. 5323 (j)(1) and the Applicable regulations on 49 CFR Part 661.

COMPANY NAME _____

SIGNATURE _____

TITLE _____

DATE _____

Certification of Non-Compliance-The Bidder hereby certifies that it cannot comply with the requirements of 49 U.S.C. 5323 (j)(1).

COMPANY NAME _____

SIGNATURE _____

TITLE _____

DATE _____

FORM MUST BE SIGNED AND SUBMITTED WITH BID OR BID WILL BE CONSIDERED TO BE NON-RESPONSIVE.

XIV. BUY AMERICA CERTIFICATION REQUIREMENTS II OF PROCUREMENT OF BUSES, OTHER ROLLING STOCK AND ASSOCIATED EQUIPMENT

49 U.S.C. 5323 (j) and 49 CFR 661 provide that no Federal funds be obligated for procurement of buses, other rolling stock and associated equipment unless the following conditions are met:
1. The cost of components which are produced in the United States is more that 60 per centum (60%) of the cost of all components of the vehicle or equipment described in this paragraph; and
2. Final assembly of the vehicle or equipment described in this paragraph has taken place in the United States.
If buses or other rolling stock (including train control, communication and traction power equipment) are being procured, the appropriate certificate as set forth below shall be completed and submitted by each Bidder in accordance with the requirements.

Certificate of Compliance-The Bidder hereby certifies that it **will comply** with the requirements of the 49 U.S.C. 5323 (j)(2)(c) and CFR Part 661.

COMPANY NAME _____

SIGNATURE _____

TITLE _____

DATE _____

Certificate of non-Compliance-The Bidder hereby certifies that it **cannot comply** with the requirements of the Surface Transportation Assistance Act of 1982, as amended, but may qualify for an exception to the requirements.

COMPANY NAME _____

SIGNATURE _____

TITLE _____

DATE _____

FORM MUST BE SIGNED AND SUBMITTED WITH BID OR BID WILL BE CONSIDERED TO BE NON-RESPONSIVE.

XV. BUY AMERICA PRE-AWARD AND POST-DELIVERY AUDITS:

A. Prior to Contract award,

The apparent successful offeror shall provide to the Authority's auditors the cost of the components and subcomponents to be used in the manufacturing of the rolling stock, their country of origin, the location of final assembly, the activities that will take place at the location and pertinent supporting documentation for the purpose of RIPTA performing the cited Pre-Award Audit of Buy-America requirements.

B. After delivery and acceptance of the vehicles,

The Contractor shall provide to the Authority's auditors the cost of the components and subcomponents used in the manufacture of the rolling stock, their country of origin, the location of final assembly, the activities that took place at the location and pertinent supporting documentation to enable RIPTA to perform the cited Post-Delivery Audit of Buy America Requirements.

C. Authority Review

The contractor shall facilitate the reviews by the Authority's auditors by providing the supporting documentation for the above information in a timely fashion.

XVI. DISADVANTAGED BUSINESS ENTERPRISES PROGRAM

Bidders are strongly encouraged to have Disadvantage Business Enterprise Participation/Small Business, regardless of the DBE Goal in this Bid.

Disadvantaged Business Enterprise (DBE) Special Provisions

A firm's DBE Participation and/or demonstration of a "Good Faith Effort" will be considered when reviewing submittals for responsiveness. This will be considered when evaluating Bid Responses

A. Policy

1. It is the policy of Department of Transportation (DOT) that the DBE requirements in 49 CFR Part 26, as amended, shall have the maximum opportunity to participate in the performance of contracts financed in whole or in part with Federal funds under this agreement. Consequently, the DBE requirements of 49 CFR Part 26, as amended apply to this agreement.
2. DBE Obligation – RIPTA or its contractor agrees to ensure that DBE's as designed in 49 CFR Part 26, as amended, have the maximum opportunity to participate in the performance of contracts and subcontracts financed in whole or in part with Federal funds provided under this agreement. In this regard, RIPTA or its contractors shall take all necessary and reasonable steps in accordance with 49 CFR Part 26, as amended, to ensure that DBE's have the maximum opportunity to compete for and perform contracts. RIPTA and its contractors shall not discriminate on the basis of race, color, religion, national origin, age or sex in the award and performance of DOT assisted contracts.
3 Contractor Obligation – Contractors and subcontractors failing to carry out the requirement set forth in 1 and 2 above, shall constitute a breach of contract and, after the notification to the Department (DOT), may result in termination of the agreement or contract by RIPTA or such remedy as RIPTA deems appropriate.

B. DBE Utilization

1. DBE Utilization

The Contractor agrees to provide for full and fair utilization of Disadvantaged Business Enterprises (DBEs) by complying with the requirements of this clause. Included in these requirements is the achievement of the stated goal for the utilization of DBEs in the performance of work under this contract. Nothing in this clause shall be construed to require the utilization of any DBEs, which is either not qualified or unavailable. . ***All DBEs submitted must be certified by the State of Rhode Island at the time of Bid submittal. A copy of the DBE Certification Letter from the State of Rhode Island Office of Civil Rights must accompany the Bid submittal***

2. Utilization Goal

For the purpose of this contract, the goal for utilization of DBEs shall be as follows: 20 DBE percent of the Contract Dollar Amount.

C. Definitions.

The terms used in these special provisions shall be defined as follows:

1. Joint Venture

an association of two or more persons to carry out a single business enterprise for profit, for which purpose they combine their property, money, efforts, skills and knowledge.

2. Disadvantaged Business

means a small business concern in which is, at least, 51 percent owned by one or more socially and economically disadvantaged individuals, or, in the case of any publicly owned business, at least 51 percent of the stock of which is owned by one or more socially and economically, disadvantaged individuals who own it.

3. Small Business Concern

a small business as defined pursuant to Section 3 of the Small Business Act and relevant regulations promulgated pursuant thereto.

4. Socially and Economically Disadvantaged Individuals

means those individuals who are citizens of the United Stated (or lawfully admitted permanent residents) and who are women, Black Americans, Hispanic Americans, Native Americans, Asian-Pacific Americans, or Asian-Indian Americans and any other minorities of individuals found to be disadvantaged by the Small Business Administration pursuant to Section 8 (a) of the Small Business Act, RIPTA shall make a rebuttal presumption the individuals in the following groups are socially and economically disadvantaged. RIPTA may also determine, on a case-by-case basis, that individuals who are not a member of one of the following groups are socially and economically disadvantaged:

a. **Black Americans**, which includes persons having origins in any of the Black racial groups of Africa;

b. **Hispanic Americans**, which includes persons of Mexican, Puerto Rican, Cuban, Central or South America, or other Spanish culture or Portuguese culture, regardless of race;

c. **Native Americans**, which includes persons who are American Indian, Eskimo, Aleuts,or Native Hawaiians;

d. **Asian-Pacific Americans**, which includes persons whose origins are Japan, China, Taiwan, Korea, Vietnam, Laos, Cambodia, the Philippines, Samoa, Guam, the U.S. Trust Territories of the Pacific, and the Northern Marianas; and

e. **Asian-Indian Americ**ans, which includes persons whose origins are from India, Pakistan, and Bangladesh.

f. **Disadvantaged Business Enterprise (DBE) Liaison Officer** – the individual designated by the Authority to monitor compliance with these Special Provisions and to assist in their implementation.

g. **Bidder** – any individual, partnership, joint venture, corporation or firm submitting a Bid for the contract.

5. Recognition of DBE Commitment

Each Bidder shall recognize RIPTA's commitment to insure that DBE's be afforded full opportunity to participate in contracts awarded by RIPTA and will not be discriminated against on the grounds of race, religion, color, national origin, handicap, age or sex.

6. Submissions

all Bidders shall submit the following information with the Bid by using the Schedule of DBE Participation (Attachment A);

1. The Name and address of each DBE firm that will participate in the contract;
2. A description of the work each named DBE firm will perform; and
3. The dollar amount of participation by each named DBE firm.

The Authority encourages firms located in the United States that are currently certified as DBEs and SBAs by Federal, State and Local agencies to apply for certification in the State of Rhode Island.

If a minority business would like to be certified by the State of Rhode Island contact: Mr. Charles Newton, Department of Administration, 1 Capital Hill, Providence, Rhode Island, 02908, Telephone (401) 222-6253.

If the apparent successful competitor's submission does not satisfy the goal, RIPTA shall determine whether the apparent successful competitor has made good faith efforts to obtain DBE participation in accordance with the guidelines stated in Paragraph F, Sub-paragraph 1, below.

Unsuccessful efforts in gaining DBE participation must be documented on the "DBE Unavailability Certification" attached hereto as Attachment D. Meeting the DBE contract goals or making good faith efforts to meet the goals is a condition of receiving a Federal Transit Administration assisted contract for which contract goals have been established by RIPTA.

The legitimacy of each DBE or disadvantaged-majority joint venture shall be determined by RIPTA, based on the information submitted in the affidavits attached hereto as Attachments C and D. RIPTA will require all prime contractors to make good faith efforts to replace a DBE subcontractor that is unable to perform successfully with another DBE. RIPTA shall approve all substitutions of subcontractors **before** award of contract and **during** contract performance, in order that substitute firms are eligible DBE's.

7. Procedure Prior to Contact Award

a. Guidance Concerning Good Faith Efforts to Meet DBE Contract Goals.

RIPTA may decide that a competitor that has failed to meet DBE contract goals may receive the contract upon determining that the efforts the competitor made to obtain DBE participation were "good faith efforts" to meet the goal. RIPTA shall not consider efforts that are merely pro forma to be good faith efforts to meet the goals, even if they are sincerely motivated, if, given all relevant circumstances, they could not reasonably be expected to produce a level of DBE participation sufficient to meet the goals. In order to award a contract to a competitor that has failed to meet DBE contract goals, RIPTA must determine that the competitor's efforts were those that, given all relevant circumstances, a competitor, actively and aggressively seeking to meet the goals would make.

Following is a list of the kinds of efforts RIPTA may consider. The list is not exclusive or exhaustive and in appropriate cases RIPTA shall consider other relevant factors or types of efforts. RIPTA shall consider not only the different kinds of efforts the contractor has made, but also the quantity and intensity of those efforts. All information must be in writing and copies of all ads, written notices, follow-up letters and/or all other correspondence must be presented whenever a waiver is asked for.

RIPTA will consider the following efforts:

i. whether the contractor attended any pre-solicitation or pre-Bid meetings that were scheduled by RIPTA to inform DBEs of contracting opportunities;
ii. whether the contractor advertised in general circulation, trade association, and disadvantaged focus media concerning the sub-contracting opportunities;
iii. whether the contractor provided written notice to a reasonable number of specific DBEs that their interest in the contract was being solicited in sufficient time to allow the DBEs to participate effectively;
iv. whether the contractor followed up initial solicitation of interest by contracting DBEs to determine with certainty whether the DBEs were interested;
v. whether the contractor selected portions of the work to be performed by DBEs in order to increase the likelihood of meeting the DBE goals including, where appropriate, breaking down contracts into economically feasible units to facilitate DBE participation;
vi. whether the contractor provided interested DBEs with adequate information about the plans, specifications and requirements of the contract;

vii. whether the contractor negotiated in good faith with interested DBEs, not rejecting DBEs as unqualified without sound reasons based on a thorough investigation of their capabilities;

viii. whether the contractor made efforts to assist interested DBEs in obtaining bonding lines of credit, or insurance required by RIPTA or contractor; and

ix. whether the contractor effectively used the services of available disadvantaged community organizations, disadvantaged contractor's groups, Local, State and Federal disadvantaged business assistance offices, and other organizations that provide assistance in the recruitment and place of DBEs.

8. Bid, Execution & Compliance with Subcontracts

Prior to the execution of a contract between RIPTA and the successful Bidder, the Bidder shall present, for RIPTA's approval, DBE subcontracts corresponding in all respects to the proposed agreements. Upon approval by RIPTA, the successful Bidder shall enter into each such approved DBE sub-contract and shall thereafter neither terminate such DBE nor reduce the scope of the work to be performed by, or decrease the price to be paid to, the DBE and the disadvantaged non-disadvantaged joint venture thereunder without in each instance the prior written approval of RIPTA.

9. Substitution of Subcontractors

RIPTA shall review for its approval all substitutions of subcontractors in order to determine if the percentage goal will be decreased by substitution of a disadvantaged contract/supplier with a non-disadvantaged contractor/supplier.

Where RIPTA has approved termination of a sub-contract held by an DBE or disadvantaged non-disadvantaged joint venture, the successful Bidder shall make every reasonable effort to propose and enter into an alternative sub-contract or subcontracts for the same work to be performed by another qualified DBE for a contract price or prices totaling not less than the contract price of the terminated sub-contract. Satisfactory evidence of reasonable efforts shall be timely furnished by RIPTA.

10. Program Compliance

At all times, discrimination on the basis of race, color, religion, national origin, handicap, age or sex will not be tolerated. RIPTA will monitor the schedule for participation by disadvantaged contractors in an effort to isolate those prime contractors who do not adhere to the non-discriminatory policies of RIPTA. If such contractor fails to respond to counseling with respect to the disposition of subcontracts pertaining to RIPTA funds, RIPTA reserves the right to terminate the contract and to consider future Bids of such contractor to be non-responsive in the absence of written assurance from it of the full opportunity for DBEs to participate in its awards of subcontracts, together with the follow-up to verify such participation.

11. Maintenance of Records

All records relating to the contract shall be maintained by the contractor for a period of three (3) years after project completion.

12. Contract Assurance

The contractor or subcontractor shall not discriminate on the basis of race, color, national origin, or sex in the performance of the contract. The contractor shall carry out applicable requirements of 49 CFR part 26 in the award and administration of DOT assisted contracts. Failure by the contractor to carry out these requirements is a material breach of contract, which may result in the termination of this contract or such other remedy, as the recipient deems appropriate.

13. Prompt Payment

The prime contractor agrees to pay each subcontractor under this prime contract for satisfactory performance of its contract no later than 30 days from the receipt of each payment the prime contractor receives from the Rhode Island Public Transit Authority. The prime contractor agrees further to return retainage payments to each subcontractor within 30 days after the subcontractor's work is satisfactorily completed. Any delay or postponement of payment from the above reference time frame may occur only for good cause following written approval of the Rhode Island Public Transit Authority. This clause applies to both DBE and non-DBE subcontractors. RIPTA reserves the right to hold payments to the Contractor if payments verification logs are not submitted within 30 days of payments. Failure to submit payments to DBE subcontractors within 30 days will result in action by RIPTA up to and including disqualification from any future RIPTA Procurements.

14. Monitoring Payments to DBEs

RIPTA requires that prime contractors to maintain records and documents of payments to DBEs following the completion of the contract. These records will be made available for inspection upon request by any authorized representative of RIPTA or United States Department of Transportation. This requirement also extends to any DBE Subcontractor. Reports of payments to DBE Subcontractors shall be provided to the RIPTA DBE Liaison Officer on a monthly basis. Failure to submit these reports on a timely basis may result in delay of payments.

XVII. DISADVANTAGED BUSINESS ENTERPRISE REQUIRED FORMS

Attachment A: Schedule of DBE Participation
Submitted if DBE firm or firms will be participating in the Bid.
Attachment B: DBE Application Agreement
Submitted if DBE firm or firms will be participating in the Bid.
Attachment C: Letter of Intent to Perform as a Subcontractor
Submitted if DBE firm or firms will be participating in the Bid
Attachment D: DBE Unavailability Summary Sheet
Submitted if DBE firm or firms you have contacted cannot participate. This form is used to document good faith effort. This form only needs to be completed when there is a DBE Participation Goal.
Attachment E: Narrative Explanation for Lack of DBE Participation
Submitted by the Prime Contractor to explain lack of DBE/SBA participation.
Attachment F: Documentation of DBE Utilization
To be filled in by the DBE firm and the prime contractor once the DBE Subcontractor has been paid.
Please Note: Final payment to the Prime Contractor will be held until this form or forms are received for each DBE Subcontractor.
DBE FIRMS PROPOSING AS A PRIME CONTRACTOR: the following forms must be filled in, signed and submitted with the Bid
Attachment A, Attachment B
Please state, on these forms, that you are proposing as a prime contractor.

CERTIFICATION LETTER OR NOTIFICATION MUST BE INCLUDED FOR EACH DBE FROM THE STATE OF RHODE ISLAND.

Please record by letter (using the list below) under the DBE Category Column found on Attachment A: Schedule of DBE Participation Form on the following page

a. "Black Americans", which includes persons having origins in any of the Black racial groups of Africa;
b. "Hispanic Americans", which includes persons of Mexicans, Puerto Rican, Cuban, Central or South America, or other Spanish culture or Portuguese or origin, regardless of race;
c. "Native Americans", which include persons who are American Indian, Eskimos, Aleuts, or Native Hawaiians:
d. "Asia-Pacific Americans", which includes persons whose origins are from Japan, China, Taiwan, Korea, Vietnam, Laos, Cambodia, the Philippines, Samoa, Guam, the U.S. Trust Territories of the Pacific, and the Northern Marianas;
e. "Asian-Indian Americans", which includes persons whose origins are from India, Pakistan, and Bangladesh; and
f. any other minorities or individuals found to be disadvantaged by the Small Business Administration pursuant to Section 8 (a) of the Small Business Act.

SCHEDULE OF DBE PARTICIPATION

A. Attachment A

Company Name: _____
Project Number: **14-17** **Project:** **Installation of Transit Shelters and Amenities-R Line**

*Please provide copy of DBE Certification Letter for each DBE firm listed from the Rhode Island Office of Civil Rights. **DBE Vendors must be certified in the State of Rhode Island at the time of Bid Submittal to be considered. A full, up to date list of Rhode Island DBEs can be obtained at the following website: www.mbe.ri.gov/**

DBE Firm Name	DBE Firm Address	DBE Category	Phone Number	Contact Name	Work to be Performed	Estimated Value Dollars	Estimated Value Percent of Bid

The undersigned will enter into a formal agreement with Disadvantaged Business Enterprise firms for work listed in this schedule conditioned upon execution of a contract with the Rhode Island Public Transit Authority.

_____
Authorized Signature of Bidder Official

***Use additional forms as needed.**

Each DBE Firm listed in the Section must also complete the Required Company Information Form and the Certification of Subcontractor Form (Page 74)

DBE APPLICATION AGREEMENT

B. Attachment B

Project Number: **14-17**

Project Name: **Installation of Transit Shelters and Amenities-R Line**

With respect to the above numbered project, I hereby certify that I am the _____ and duly authorized representative of _____
(Title) (Firm)
Address is _____, _____, _____
(Street) (State) (Zip Code)

I do hereby certify that it is the intention of the above organization to affirmatively seek out and consider Disadvantaged Business Enterprises to participate in this contract as contractors, Subcontractors and/or suppliers of requirements of the U.S. Department of Transportation's regulation 49 CFR Part 26.

I understand and agree that any and all contracting in connection with this contract, whether undertaken prior to or subsequently to award of contract, will be in accordance with this provision.

The utilization of Disadvantaged Business Enterprise is in addition to all other equal opportunity requirements of this contract.

_____
Authorized Signature

_____
Title

LETTER OF INTENT TO PERFORM AS A SUBCONTRACTOR

C. Attachment C

To: _____
(Name of Prime or General Bidder)

The undersigned intends to perform work in connection with the above project as (check one):

___ an individual ___ a corporation

___ a partnership ___ a joint venture

The undersigned is prepared to perform the following described work in connection with the above project (specify in detail particular work items or parts thereof to be performed).

_____
_____
_____
_____
_____
_____
_____
_____
_____
_____

for the following compensation: _____

_____
(Name of DBE Contractor)

DBE GOOD FAITH EFFORT SUMMARY SHEET

D. Attachment D.

RIPTA requires a listing of DBE firms contacted; but not able to perform work. Use additional pages as needed. The DBE Goal for this project is 20 percent. **. A full, up to date list of Rhode Island DBEs can be obtained at the following website: www.mbe.ri.gov/**

DBE Firm Name	DBE Firm Address	DBE Category	Phone Number Email Address	Contact Name	Reason Unable to Perform Work

Project Name: 14-17 **Project Number: Installation of Transit Shelters and Amenities-R Line**

Form completed by: _____ Date: _____

NARRATIVE EXPLANATION FOR LACK OF DBE PARTICIPATION
E. Attachment E

Company Name: _____

Project Number: **14-17**

Project Name: **Installation of Transit Shelters and Amenities-R Line**

_____
_____
_____
_____
_____
_____
_____
_____
_____
_____
_____
_____
_____
_____
_____
_____
_____
_____
_____
_____
_____
_____

_____
(Authorized Signature of Prime Contractor)

TO BE FILLED IN BY THE PRIME CONTRACTOR TO EXPLAIN LACK OF DBE PARTICIPATION.

DOCUMENTATION OF DBE UTILIZATION

F. Attachment F

RIPTA Contract Number: 14-17

Prime Contractor: _____

DBE Name: _____

Starting Date: _____ **Completion Date:** _____

This is to verify the following:

- I was the approved DBE on the above contract.
- I performed the items of work Subcontracted.
- I actually received $_____ for my work.
- I received payment of retainage on _____
  (date)

_____ _____
(Signature & Title of DBE) (Date)

_____ _____
(Signature & Title of Prime Contractor) (Date)

This form is to be filled in by the DBE firm and the prime contractor once the DBE Subcontractor has been paid.

Retainage payments will be made to each subcontractor within 30 days after the subcontractor's work is satisfactorily completed

Please Note: Final payment to the Prime Contractor will be held until this form or forms are received for each DBE Subcontractor.

XVIII. PERFORMANCE AND PAYMENT BOND INFORMATION

The selected Bidder shall furnish, within twenty (20) calendar days (if required) after the date of notice of award of contract by RIPTA, Performance and Payment Bonds in the amount of 100% of the Bid amount covering the faithful performance of the contract.

The Performance Bond is to be secured through an insurance company or companies, which are licensed in the State of Rhode Island or which is approved by the Authority.

The Bond will remain in effect throughout the warranty period.

XIX. BID GUARANTEE (SURETY)

A Bid Guarantee (if required) shall be submitted with the Bid response. This guarantee shall be equivalent to five (5) percent of the Bid price. The "Bid guaranty shall consist of a firm commitment such a bid bond, certified check, or other negotiable instrument accompanying a Bid as assurance that the Bidder will, upon will, upon acceptance of its Bidder, execute such contractual documents as may be required within twenty (20) calendar days after the date of notice of award of contract by RIPTA.

XX. REQUIRED INSURANCE

The Bidder will be required to secure and maintain the following insurance coverages:

A. Minimum limits

1. Commercial comprehensive general liability insurance, with limits of $3,000,000.00 per accident and $5,000,000.00 aggregate.
2. Workers' Compensation Coverage in accordance with RI Statutory requirements.
3. The Rhode Island Public Transit Authority shall be named as additional insured under said policies.
4. Automotive Liability Insurance
   - $1,000,000.00 per accident and $3,000,000.00 aggregate: bodily injury.
   - $1,000,000.00 property damage

B. Certificate Requirements

1. Each bidder must provide RIPTA a Certificate of Insurance upon award of the contract. Coverage indicated on certificate must be kept in effect at all times during the contract period
2. The General Liability Coverage shall include Contractual Liability and Completed Operations Coverages. The General Liability coverage, certificates must name: RIPTA and its respective directors, officers, employees, and affiliates as additional insureds. Reference should be made to project or job number and location.

3. A Waiver of Subrogation in favor of RIPTA must apply to the General Liability, Employers Liability, and Excess Liability / Umbrella policies.
4. Automobile Liability must cover any owed, rented, hired or borrowed vehicles.
5. The Excess or Umbrella coverage must provide the required
   Liability limit over the General Liability, Automobile Liability, Employers Liability s, Professional Liability and Environmental
   Liability policies (if required).
6. If bidder is to use any subcontractor during the course of the project, the subcontractor must maintain the same limits and terms as the bidder. Certificates of Insurance for subcontractors must be provided to RIPTA with the Bidder's Submittal after award of the Contract.
7. All certificates of insurance must indicate the carrier policy cancellation terms.
8. All bidders must utilize insurance companies with a "Best" Rating of no less than A-, Size VIII.

C. Special Coverages

1 Contractor must maintain Environmental Pollution coverage with limits no less than $1,000,000 if contractors work includes the transport, delivery, storage, handling or disposal of any pollutants or other hazardous materials. This insurance is also required for all contracts involving any work on RIPTA's storage tanks, and fluid distribution systems

2 Installation Floater Insurance is required for all construction projects equal to the value of the project.

3 Professional Liability/Errors and Omission coverage shall be included in all Professional Services Contracts

Bidder shall provide to RIPTA Contracts Manager a Certificate of Insurance upon award of contract. This Certificate shall be kept in effect at all times. Current copies shall be provided to the Contracts Manager

XXI. GENERAL CONTRACT COMPLIANCE CERTIFICATE AND AGREEMENT

RHODE ISLAND STATE EQUAL OPPORTUNITY OFFICE

The undersigned Contractor agrees and certifies, unless otherwise exempt, that it is in compliance with the applicable requirements of Federal Executive order No. 11246, as amended, Rhode Island General Law 28-5.1-10, and other regulations as issued by the Rhode Island Public Transit Authority, as set forth below, or will take steps to comply with such requirements prior to acceptance of any order from us. This agreement and certificate shall form a part of, and be deemed incorporated in, each order submitted to you for supplies or services exceeding $10,000. Failure to comply will be considered a substantial breach of the contract.

A. Equal Opportunity Clause

During the performance of this contract, the Contractor agrees as follows:

1. The Contractor will not discriminate against any employee or applicant for employment because of race, color, religion, sex, or natural origin. The Contractor will take affirmative action to ensure that applicants are employed, and that employees are treated during employment, without regard to their race, color, religion, sex, or national origin. Such action shall include, but not be limited to, the following: employment, upgrading, or transfer, recruitment or recruitment advertising, layoff or termination, rates of pay or other forms of compensation, and selection for training, including apprenticeship. The Contractor agrees to post in conspicuous places, available to employees and applicants for employment, notices to be provided by the contracting officer setting forth the provisions of the non-discrimination clause.
2. The Contractor will, in all solicitations or advertisements for placed by or on behalf of the contractor, state that all qualified applicants will receive consideration for employment without regard to race, color, religion, sex, or national origin.
3. The Contractor will send to each labor union or representative of workers with which he/she has collective bargaining agreement or other contract or understanding a notice, advising the labor union or worker's representative of the Contractor's commitments under Section 202 of Federal Executive order No. 11246, as amended, Rhode Island Law 28-5.1-10, and other regulations and relevant orders of the Secretary of Labor.
4. The Contractor will comply with all provisions of Federal Executive Order No. 11246, as amended, Rhode Island General Law 28-5.1-10, and other regulations and relevant orders of the Secretary of Labor.
5. The Contractor will furnish all information and reports required by Executive Order No. 11246, as amended, Rhode Island General Law 28-5.1-10 and other regulations as issued by the State of Rhode Island, and by the rules, regulations, and orders of the Secretary of Labor, or pursuant thereto, and will permit access to his/her books, records and accounts by the State Equal

Opportunity Office and the Secretary of Labor for purposes of investigation to ascertain compliance with such rules, regulations and orders.

6. In the event of the Contractor's non-compliance with the non-compliance with the non-discrimination clauses of this contract or with any of such rules, regulations, or orders, this contract may be cancelled, terminated or suspended in whole or part, and the Contractor may be declared ineligible for further State contracts in accordance with procedures authorized in Federal Executive Order No. 11246, as amended, Rhode Island General Law 28-5.1-10 , and other regulations as issued by the State of Rhode Island, and such other sanctions may be imposed and remedies invoked as provided in Federal Executive Order No. 11246, as amended; Rhode Island Public Transit Authority, or by rule, regulation, or order of the Secretary of Labor, or as otherwise provided by law, or the State of Rhode Island and Providence Plantations.
7. The Contractor will include the provisions of paragraphs (1) through (7) in every sub-contract or purchase order unless exempted by rules, regulations, or orders of the Secretary of Labor issued pursuant to Section 204 of Federal Executive Order No. 11246, as amended, Rhode Island General Law 28-5.1-10, and other regulations as issued by the Rhode Island Public Transit Authority, so that such provisions will be binding upon each subcontractor or vendor. The Contractor will take such action with respect to any sub-contract of purchase order as the contracting agency may direct as a means of enforcing such provisions including sanctions for non-compliance; provided, however, that in the event the Contractor becomes involved in, or is threatened with litigation with a subcontractor or vendor as a result of such direction by the contracting agency, the Contractor may request the United States and the State of Rhode Island to enter into such litigation to protect the interest of the United States and the State of Rhode Island.

B. Age Discrimination

Pursuant to Federal Executive Order No. 11246, as amended, the Contractor will not, in connection with the employment, advancement or discharge of employees, or in connection with the terms, conditions, or privileges of their employment, discriminate against persons because of their age except upon the basis of a bona fide occupational qualification, retirement plan or statutory requirement, nor will the Contractor specify, in solicitations or advertisements for employees, a maximum age limit for employment unless the specified maximum age limit is based upon a bona fide occupational qualification, retirement plan or statutory requirement.

C. Employment of the Handicapped

1. Contractor will not discriminate against any employee or applicant for employment because of physical or mental handicap in regard to any position for which the employee or applicant for employment is qualified. Contractor agrees to take affirmative action to employ, advance in employment, and otherwise treat

qualified handicapped individuals without discrimination based upon their physical or mental handicap in all employment practices such at the following employment, upgrading, demotion or transfer, recruitment or recruitment advertising; layoff or termination, rates of selection for training, including apprenticeship.

2. Contractor agrees that if a handicapped individual files a complaint with him/her that he/she is not complying with the requirements of the Rehabilitation Act of 1973, he/she will (1) investigate the complaint and take appropriate action consistent with requirements of 41 CFR Part 60-741.29 and (2) maintain on file for three years, the record regarding the complaint and the actions taken.
3. Contractor agrees that if a handicapped individual files a complaint with the Department of Labor that he/she has not complied with the requirements of the act, (1) he/she will cooperate with the Department in its investigation of the complaint, and (2) he/she will provide all pertinent information regarding his/her employment practices with respect to the handicapped.
4. Contractor agrees to comply with the rules and regulations of Section 503 of the Rehabilitation Act of 1973 as interpreted in 41 CFR Part 60-741.29.
5. in the event of Contractor's noncompliance with the requirements of this clause contract may be terminated or suspended in whole or in part.
6. This clause shall be included in all subcontracts. In the event that this contract exceeds $10,000 but is less than $500,000 and provides for performance in 90 days or more, Contractor further agrees as follows:
7. Contractor agrees (1) to establish an affirmative action program, appropriate procedures consistent with the guidelines and the rules of the Secretary of Labor, will provide the affirmative action regarding employment and advancement of the handicapped required by P.L. 93-516, (2) to publish the program in the employees or personnel handbook or otherwise distribute a copy to all personnel, (3) to review the program each year and to make such changes as may be appropriate, and (4) to designate one of the principal officials to be responsible for the establishment and operation of the program.
8. Contractor agrees to permit the examination by appropriate contracting agency officials or the Assistant Secretary for Employment Standards or the designee, of pertinent books, documents, papers and records concerning employment and advancement of the handicapped.
9. Contractor agrees to post in conspicuous places, available to employees and applicants for employment, notices in a form to be prescribed by the Assistant Secretary for Employment Standards, provided by the contracting officer, stating Contractor's obligation under the law to take affirmative action to employ and advance in employment qualified handicapped employees and applicants for employment and the rights and remedies available.

10. Contractor will notify each labor union or representative of workers with which he/she has a collective bargaining agreement or other contract understanding, that he/she is bound by the terms of Section 503 of the Rehabilitation Act, and is committed to take affirmative action to employ and advance in employment, physically and mentally handicapped individuals.
    In the event this contract exceeds $100,000 and provides for performance in 90 days or more, Contractor further agrees as follows:
11. Contractor agrees to submit a copy of his/her affirmative action program to the State Equal Opportunity Office within 30 days after the award of a contract or sub-contract.
12. Contractor agrees to submit a summary report to the State of Rhode Island and Providence Plantations Equal Opportunity Office by March 31 of each year during performance of the contract and by March 31 of the year following completion of the contract, in the form prescribed by State Equal Opportunity Office covering employment and complaint experience accommodations made and all steps taken to effectuate and carry out the commitments set forth in the affirmative action program.

XXII. CERTIFICATE OF NON-SEGREGATED FACILITIES

Contractor certifies that he/she does not maintain or provide for his/her Employees any segregated facilities at any of his/her establishments, and that he/she does not permit his/her employees to perform their services at any such location, under his/her control, where segregated facilities are maintained. He/she certifies further that he/she will not permit his/her employees to perform their services at any location, under his/her control, where segregated facilities are maintained. Contractor agrees that a breach of this certification is a violation of the Equal Opportunity Clause in this contract. As used in this certification, the term “Segregated Facilities” means any waiting room, work areas, rest rooms, and wash rooms, restaurants and other eating areas, parking lots, drinking fountains, recreation or entertainment areas, transportation, and housing facilities provided for employees which are segregated by explicit directive or are, in fact, segregated on the basis of race, creed, color, or national origin, because of habit, local custom, or otherwise. He/she further agrees that (except where he/she has obtained identical certifications from proposed subcontractors for specific time periods), he/she will obtain identical certifications from proposed subcontractors prior to the award of subcontracts exceeding $10,000, which are not exempt from the provisions of the Equal Opportunity Clause; that he/she will forward the following notice to proposed subcontractors (except where the proposed subcontractors have submitted identical certifications for specific time periods).

XXIII. NOTICE OF PROSPECTIVE SUBCONTRACTORS OF REQUIREMENT FOR CERTIFICATION OF NONSEGREGATED FACILITIES

A Certificate of Nonsegregated Facilities must be submitted prior to the award of a sub-contract exceeding $10,000 which is not exempt from the provisions of the Equal Opportunity Clause. The certification may be submitted either for each sub-contract or for all subcontracts during a period (i.e. quarterly, semi-annually, or annually).

NOTE: The penalty for making false statements in offers is prescribed in 18 USA 1001.

A. Affirmative Action Compliance Program

Contractor agrees to develop a written Affirmative Action Compliance Program for each of its establishments as required by Section 60-1.40 of Title 41 of the Code of Federal Regulations.

B. Employer's Information Report (EE)-1) Form 100

Contractor agrees to file in duplicate, Standard Form 100, entitled, **"Equal Employment Opportunity Employer Information Report EEO-1"** as required by Section 60-1.7 of Title 41 of the Code of Federal Regulations.

Send original copy to Federal authorities, duplicate copy to the State Equal Opportunity Office, 1 Capitol Hill, Providence, Rhode Island 02908-5865.

C. Notice to All Vendors

If it should be determined by the State Equal Opportunity Office that any company doing business with the State is guilty of non-compliance with the provisions of this document, said company will be given two (2) written warnings. If the said company does not comply immediately after the second written notice, then the State Equal Opportunity Office will notify the Rhode Island Public Transit Authority, who shall have the authority to have the contract **revoked** and all contractual obligations of the State dealing with the contract in question will be **null** and **void.**

D. Post Award Conference

Post Award Conference for the Implementation of Affirmative Action prior to Signing of Contract.

C. Signature Required

Failure to provide a signature prior to Award to successful Bidder shall be cause for Rejection of Bid.

XXIV. GENERAL CONTRACT COMPLIANCE CERTIFICATE & AGREEMENT FORM

(Equal Employment Opportunity)

Authorized Signature: _____

Print Name: _____

Title: _____

Company Name: _____

Date: _____

Indicate Job Location Address: _____

BID NO. 14-17

XXV. DAVIS BACON ACT COMPLIANCE

I certify that I will comply with the Provisions of the Davis-Bacon Act for this project. I certify that I will pay the applicable Prevailing Wages as listed at the following web address:
http://www.access.gpo.gov/davisbacon/ri.html

Authorized Signature: _____

Print Name: _____

Title: _____

Company Name: _____

Date: _____

Indicate Job Location Address: _____

XXVI. CERTIFICATION OF PRIMARY PARTICIPANT FORM

Invitation for Bid Number: 14-17
Project Installation of Transit Shelters and Amenities-R Line

The primary participant _____, certifies to the best of its knowledge and belief, that it and its principals:

1) Are not presently debarred, suspended, proposed for debarment, declared eligible, or voluntarily excluded from covered transactions by any Federal Department or Agency;
2) Have not within a three-year period preceding this Bid been convicted of or had a civil judgment rendered against them for commission of fraud or a criminal offense in connection with obtaining, attempting to obtain, or performing a public (Federal, State, or Local) transaction or contract under a public transaction; violation of Federal or State antitrust statutes or commission of embezzlement, theft, forgery, bribery, falsification or destruction or records, making false statements, or receiving stolen property;
3) Are not presently indicted for or otherwise criminally or civilly charged by a government entity (Federal, State, or Local) with commission of any of the offenses enumerated in paragraph (2) of this certification; and
4) Have not within a three-year period preceding this application/Bid had one or more public transactions (Federal, State, or Local) terminated for cause or default.
5) The Primary Participant also certifies that, if it later becomes aware of any information contradicting the statements of Paragraphs 1-4 above, it will promptly notify RIPTA.

The primary participant _____, certifies or affirms the truthfulness and accuracy of the contents of the statements submitted on or with this certification and understands that the provisions of 31 U.S.C Sections 3801 **ET SEQ**. are applicable thereto.

_____ _____
Signature/Title of Authorized Official Date

XXVII. DEBARMENT CERTIFICATION

CERTIFICATION REQUIREMENTS FOR RECIPIENTS OF GRANTS AND COOPERATIVE AGREEMENTS REGARDING DEBARMENT AND SUSPENSIONS

The purpose of the attached certifications is to exclude entities and individuals that the Federal Government has either debarred or suspended from obtaining Federal assistance funds through grants, cooperative agreements or third party contracts.

To assure that such entities and individuals are not involved in projects financed with Federal Transit Administration (FTA) assistance, FTA requires its applicants to complete the certificates.

The primary participant must sign the "**Certification of Primary Participant**" and, if there is a subcontractor, they must sign **the "Certification of a Subcontractor"** (If there is more than one subcontractor, they must all sign one of these forms.).

XXVIII. CERTIFICATION OF A SUBCONTRACTOR FORM

Invitation for Bid Number: 14-17

Project **Installation of Transit Shelters and Amenities-R Line**

The potential Subcontractor, _____
Certifies, by submission of this certification, that neither it nor its principals are presently debarred, suspended, proposed for debarment, declared ineligible, or voluntarily excluded from participation in this transaction by any Federal Department or agency.

The Subcontractor, _____ certifies or affirms the truthfulness and accuracy of the contents of the statements submitted on or with this certification and understands that the provisions of 31 U.S.C. Sections 3801 **ET SEQ**. are applicable thereto.

_____
Signature/Title of Authorized Official

_____ _____
Print Signature Date

XXIX. NON-RESIDENT CONTRACTOR INFORMATION

From: Department of Administration
Division of Taxation
289 Promenade Street
Providence, RI 02908

Notice: "To All Persons Engaging Non-Resident Contractors"
Regulation Re: Contractors and Subcontractors - "Regulation C"
Article III, Non-Resident Contractors
Any individual, partnership, joint venture, corporation, state, municipal government or exempt organization awarding a construction contract in Rhode Island to a non-resident contractor (as hereinafter defined) is required, pursuant to Section 44-1-6 of the General Laws, as last amended, to withhold 3% of the contract price to secure payment of any sales and use tax or income tax withheld, or both, that may be due to the State of Rhode Island in carrying out the contract.

Upon completion of the contract, the non-resident contractor is required to notify the Tax Administration shall, within 30 days after receipt of the request, audit the records and provide by certified mail to the person holding the funds and to the non-resident contractor, either a certificate of no tax due or a notice of taxes due.

The person holding the funds is required to pay to the Tax Administrator the amount set forth in the notice of taxed due, including interest and penalties, but not in excess of 3% of the contract price. Monies withheld in excess of taxes due the Tax Administrator may be paid to the non-resident contractor.
If the Tax Administrator does not furnish a certificate of no tax due or a notice of taxes due within 30 days after receipt of the request for the making of the audit, the person holding the funds may remit the full amount due to the non-resident contractor. The Tax Administrator shall not have any claim against such funds in the hand of the person holding the funds.

DEFINITION OF NON-RESIDENT CONTRACTOR

"A non-resident contractor is one who does not maintain a regular place of business in this state. A regular place of business shall be deemed to mean and include any bona fide office (other than a statutory office), factory, warehouse or other space in this state at which the taxpayer is doing business in its own name in a regular and systematic manner and which is continuously maintained, occupied and used by the taxpayer in carrying on its business through its regular employees regularly in attendance. A temporary office at the site of construction shall not constitute a regular place of business".
In order to effectively implement this legislative change which became effective on passage, non-resident contractors shall forward such notice of completion by certified or registered mail (in duplicate) to the Division of Taxation.
R. Gary Clark
Tax Administrator

XXX. DRUG & ALCOHOL TESTING PROGRAM

In accordance with the Federal Transit Administration Rules 49 CFR 40, 653, and 654, pertaining to prohibited drug use and Contract Service Providers who perform safety-sensitive functions as follows:

- Operation of Revenue Service Vehicles In and Out of Service.
- Dispatch or Control Movement of Revenue Service Vehicles.
- Maintain, Repair and Inspect Revenue Service Vehicle.

The standards they must meet are:

1. Provide each employee performing a RIPTA safety-sensitive function a copy of RIPTA's Prohibited Drug Use and Alcohol Misuse Policy and Procedures. Each Employee must sign and return to RIPTA "Confirmation of Receipt" form.
2. Provide RIPTA with documentation that all employees, both full and part-time, participate in a prohibited drug use testing program in compliance with 49 CFR 653 and an alcohol misuse testing program in compliance with 49 CFR 654. Documentation must be provided which insures that all testing is performed in compliance with 49 CFR 40.
3. Provide to RIPTA's, by February 1st, following each calendar year, annual Management Information Systems (MIS) reports for submission to the FTA. The MIS form used must be that which is contained in 49 CFR 653 and 654.
4. Identify a contact person responsible for handling all 49 CFR 40, 653 and 654 regulation compliance.

XXXI. DRUG AND ALCOHOL POLICY ACKNOWLEDGEMENT

CONTRACT SERVICE PROVIDER
ACKNOWLEDGEMENT AND CONFIRMATION OF RECEIPT

Employee Name:_____

Company Name: _____

I have received a copy of Rhode Island Public Transit Authority's Prohibited Drug Use and Alcohol Misuse Policy and Procedures.

Employee
Signature: _____ Date: _____

Return To: Drug and Alcohol Test Coordinator
Department of Human Resources
Rhode Island Public Transit Authority
Room 217
705 Elmwood Avenue
Providence, Rhode Island 02907

XXXII. OVERVIEW

Established in 1966, the Rhode Island Public Transit Authority (RIPTA) is a quasi-public, independent authority that is authorized to operate public transit services throughout the State of Rhode Island. In 2009, RIPTA, along with the City of Providence, completed the Providence Metropolitan Transit Enhancement Study, which resulted in the creation of ten recommendations to guide the future development of RIPTA service. These recommendations include the creation of RIPTA's Rapid Bus program, a program to provide identified transit corridors with a premium level service to both improve RIPTA's operational efficiency and the passenger experience. In 2011, RIPTA formally adopted the Rapid Bus program as part of its five year strategic plan. Concurrently, RIPTA partnered with the City of Providence in the successful application for a Community Challenge Grant from the HUD Office of Sustainable Housing and Communities. RIPTA and Providence's successful grant is entitled Transportation Corridors to Livable Communities, and is a collaborative effort to strengthen the link between land use and transit access. Through Transportation Corridors to Livable Communities, RIPTA has completed planning of its first Rapid Bus corridor, the R-Line.

The R-Line will provide bus service on RIPTA's highest ridership corridor, which carries approximately 11,000 passengers per weekday over the course of 7 miles of routing. This route will run from the southern terminus on Broad Street at the Providence/Cranston city line, along Broad Street to downtown Providence. Once downtown, the R-Line will stop at both Kennedy Plaza (RIPTA's primary bus hub) and Providence Station (direct connections to Amtrak and MBTA service). The R-Line will continue north along North Main Street into Pawtucket. Once in Pawtucket, the R-Line will continue along Main Street to its northern terminus downtown Pawtucket. The R-Line is comprised of 56 total bus stops (27 pairs of stops with two unpaired stops). The R-Line also includes RIPTA's first implementation of Transit Signal Prioritization. Due to space constraints, the R-Line will operate largely within mixed traffic with improvements made at several intersections to accommodate RIPTA's passage through these intersections.

As the R-Line is a collaborative enterprise between RIPTA and the City of Providence, there is an equally heavy focus on placemaking as there is on improving transit service. The R-Line will incorporate both wayfinding and local artwork as part of its development, and is designed to complement the neighborhoods. The City of Providence Department of Art, Culture, and Tourism developed themes to guide the development of art so that it is reflective of the local culture.

Through this Invitation For Bids (IFB), the Rhode Island Public Transit Authority seeks to enter into a contract with a company for the

installation/construction of the following items at up to 51 locations along the length of the R-Line:

- Up to Ten (10) four-post transit shelters (approximately 6'X16')
- Up to Six (6) four-post transit shelters (approximately 6'X20')
- Up to Eight (8) cantilevered transit shelters (approximately 5'X16')
- Up to Two (2) cantilevered transit shelters (approximately 5'X20')
- Up to Four (4) windscreens
- Up to Thirty-four (34) benches
- Up to Thirty-one (31) trash cans
- Up to Twenty-four (24) bicycle racks
- Up to Twenty-one (21) wayfinding "totems"
- Up to Thirty-one (31) enhanced transit signs
- Up to Twenty-six (26) name plate and identity graphics
- Up to Fourteen (14) art panels installed directly into bus shelters
- Up to Eight (8) art benches
- On-street striping delineating bus stops
-

XXXIII. REQUIREMENTS OF THE SUCCESSFUL BIDDER

Prior to construction, this project requires coordination between several organizations. Therefore, potential bidders are advised that they must agree to the following requirements to be eligible for award of this contract.

A. Receiving, Retrieval, and Storage

1. The selected applicant will be responsible for receiving, from the artists, and storing project artwork (14 art panels and 8 art benches) and signage (21 wayfinding totems and 31 enhanced transit signs) at a secure location as defined below.
2. Successful bidder is responsible for coordinating delivery of the artwork and signage and any associated accessories.
3. The delivery must be completed within thirty (30) days of the Notice to Proceed and RIPTA's approval of the secure site.
4. The successful bidder shall be responsible for transporting and delivery of the artwork, signage, and any associated accessories to the individual project sites at the appropriate time.
5. Amenities for Kennedy Plaza, Providence Station, and Downtown Pawtucket will be delivered under this contract, but will not be installed under this contract. The contractor and RIPTA must coordinate delivery of these amenities to RIPTA.

6. The selected applicant is also required to retrieve all shelters and passenger amenities from RIPTA's headquarters (705 Elmwood Ave., Providence, RI 02907) upon award.

7. All product must be retrieved at the same time. Partial retrieval is not acceptable

8. The contractor is responsible for coordinating the retrieval directly with RIPTA and must schedule this in advance.

9. Retrieval must be completed within thirty (30) days of the Notice to Proceed and RIPTA's approval of the secure site.

10. The project shelters and site accessories shall be the responsibility of the successful bidder to transport and deliver the items to the individual project sites at the appropriate time.

11. Storage shall be in accordance with artist and manufacturer instructions. Items shall be stored off the ground or floor and be protected from the weather elements. The method of storage shall be such as to prevent the item damage and/or warping.

12. RIPTA's Owner Rep shall be present when all items are received by the successful bidder.

B. Secure Storage Site

The Contractor shall provide a secure storage site in accordance with the terms listed below

1. The secure storage site location and address shall be provided to RIPTA within five (5) days following contract signing.

2. Within five (5) days of receipt of the secure storage location, RIPTA shall visit and review the site for acceptability. Should the site be unacceptable, the successful bidder has another five (5) days to select another location and advice RIPTA of the location for review.

3. The secure site can be located at the successful bidders main office/storage site. The selected area must meet the criteria outlined below.

4. Should the successful bidder not have sufficient storage space at his main office/storage site, the successful bidder shall rent a secure site that is within ten (10) miles of RIPTA's offices on Elmwood Avenue.

5. Secure storage area criteria

a. The secure storage area must have limited, securable, and controlled access.

b. The secure storage area must be of sufficient size to properly store the items without relocating items every time a particular item is to be removed for delivery to the project work site by the successful bidder.

c. The secure site must provide protection from the weather elements, i.e. wind, ice, etc…

6. Regardless of the secure storage location, the successful bidder shall secure, pay for, and provide proof of insurance covering all project artwork, signage, shelters, site accessories, and any associated items.

C. Construction/Installation Schedule

1. Within five (5) days following the contract signing, the successful bidder shall coordinate with the Owner's Rep and update and revise the proposed construction schedule submitted with their bid.

2. The resulting schedule shall be used to inform the artists as to when their artwork will be installed. **The artists are to be present when the art is installed.**

D. Site Work and Installation

1. All site and installation work shall be done in accordance with State, Federal, and Local codes and ordinances.

2. All work shall be done in accordance with the project plans, specifications, and manufacturer's instructions.

3. Should there be a conflict between the drawings and specifications and the manufacturer's instructions, the successful bidder shall immediately contact the Owner's Rep for clarification and resolution.

4. Street trees are included in the site plans, but installation of street trees is not a required part of this contract and should be treated as a point of reference only.

E. Project Start and Completion Dates

1. Project site work shall start within ten (10) days following the receipt of the Notice To Proceed.

2. The project must be substantially complete within ninety (90) calendar days following the receipt of the Notice To Proceed

3. The project must be complete within 120 calendar days following the notice to proceed from the Authority

F. Inclement Weather Conditions

Time is of the essence; see Paragraph E. 2. above.

G. Liquidated Damages

Liquidated Damages will be assessed at the rate of $1,500.00 per calendar day after the project completion date in accordance with Section E.

H. Billing and Payment

1. The successful bidder shall bill monthly using a properly completed and signed AIA Form G702 and G703.
2. Ten percent (10%) retainage shall apply to this project.
3. RIPTA shall provide payment within sixty (60) days following the review and approval of the AIA Requisition for Payment.

XXXIV. BASIS OF AWARD

Award is based upon cost. To be considered eligible, an applicant must demonstrate the capacity to complete all requirements. The Authority reserves the right to delete locations from the list below contingent upon the availability of funds.

XXXV. REQUIRED BID SUBMISSIONS

A. Number of Copies

Bidders must submit an original and two(2) additional copies to:

Michael J. McGrane
Contract Manager
Rhode Island Public Transit Authority
Room 213
705 Elmwood Ave.
Providence, RI 02907

B. Bid Package Content

1. **Bid Package Information**
   a) Bid Submittals shall be typewritten.
   b) Bid Submital timeline/installation plan.
2. **References**
   Please submit a minimum of three (3) references for similar projects, including project name and location, project completion date, and contact name and phone number.

XXXVI. BASIS OF AWARD

The contract will be awarded to the responsive, responsible bidder that submits the lowest cost to the Authority.

.

RHODE ISLAND PUBLIC TRANSIT AUTHORITY
Invitation for Bids Number 14-17
BID PRICE SUBMITTAL WORKSHEET

XXXVII. BID PRICE SUBMITTAL WORKSHEET.

The Authority reserves the right to delete locations from the list below contingent upon the availability of funds.

Site Plan Number	Site	TOTAL COST
1	Broad at Montgomery North Stop	
1	Broad at Montgomery South Stop	
2	Broad at Carr_Calla North Stop	
2	Broad at Carr_Calla South Stop	
3	Roger Williams Park North Stop	
3	Roger Williams Park South Stop	
4	Broad at Early North Stop	
4	Broad at Early South Stop	
5	Broad at Thurbers North Stop	
5	Broad at Thurbers South Stop	
6	Broad at Ontario North Stop	
6	Broad at Ontario South Stop	
7	Broad at Public North Stop	
7	Broad at Public South Stop	
8	Broad at Parkis North Stop	
8	Broad at Parkis South Stop	
9	Trinity Square North Stop	
9	Trinity Square South Stop	
10	Broad at Lockwood North Stop	
10	Broad at Lockwood South Stop	
11	Dexter Manor North Stop	
11	Dexter Manor South Stop	
12	Empire at Westminster North Stop	
12	Empire at Westminster South Stop	
15	Roger Williams National Memorial North Stop	
15	Roger Williams National Memorial South Stop	
16	University Market North Stop	
16	University Market South Stop	
17	Charlesgate North Stop	
17	Charlesgate South Stop	
18	North Main at Cypress North Stop	
18	North Main at Cypress South Stop	
19	North Main at Rochambeau North Stop	
19	North Main at Rochambeau South Stop	
20	North Main at Third North Stop	
20	North Main at Third South Stop	
21	North Main at Ninth North Stop	
21	North Main at Ninth South Stop	
22	Main at Grenville North Stop	
22	Main at Grenville South Stop	
23	Hope Artiste Village North Stop	
23	Hope Artiste Village South Stop	
24	Main at Sayles North Stop	
24	Main at Sayles South Stop	
25	Main at Whitman North Stop	
25	Main at Whitman South Stop	
26	Main at Pearl North Stop	

26	Main at Pearl South Stop	
27	Collyer Park North Stop	
27	Collyer Park South Stop	
28	Main at Goff South Stop	
GRAND TOTAL		

Having examined the Place of The Work and all matters referred to in the Instructions to Bidders, and in the Contract Documents prepared by The Robinson Green Beretta Corporation, Architect for the above mentioned project, we, the undersigned, hereby offer to enter into a Contract to perform the Work for the Sum of:

_____($_____.)
(written, and numerically)

We have included the required Bid security as required by the Invitation to Bid.

XXXVIII. APPENDIX A: BACKGROUND MATERIALS AND DOCUMENTS

Applicants should be familiar with each of these following documents.

- http://www.ripta.com/r-line-
  - RIPTA's website for the R-Line
- http://www.providenceri.com/planning/transportation-corridors-to-livable-communities-0
  - City of Providence's website for the Transportation Corridors to Livable Communities project
- https://www.dropbox.com/sh/wivbaxplzkbwuft/K10kT6JPda
  - Aerial views of proposed R-Line Stops, with highlighted areas of proposed work
  - Site Amenity Spreadsheet
- https://www.dropbox.com/sh/mececby3bf1ace9/sR8K_IAeH-
  - Art panels and installation plans

XXXIX. APPENDIX B.

A. Project Specific Technical Requirements
B. Project Related Drawings.

PROJECT MANUAL

RHODE ISLAND PUBLIC TRANSIT AUTHORITY

RIPTA R- LINE STATIONS

Providence and Pawtucket, Rhode Island

February 10, 2014
RGB Project No. 6060-9007

50 Holden Street · Providence, RI 02908 · Tel: (401) 272-1730 · Fax: (401) 273-7156
www.rgb.net
Architecture · Engineering · Interior Design
RGB

Division	Section Title	Pages
PROCUREMENT AND CONTRACTING DOCUMENTS GROUP		
DIVISION 00 - PROCUREMENT AND CONTRACTING REQUIREMENTS		
000000	INVITATION TO BID	1
002000	INSTRUCTIONS TO BIDDERS	6
004100	BID FORM	4
004300	BID SECURITY FORM	1
	AIA A310 - BID BOND	
004500	LETTER OF INTENT	1
004600	BIDDERS INTERPRETATION REQUEST FORM	1
005200	AGREEMENT FORM	1
	AIA A101 - STANDARD FORM OF AGREEMENT	
005500	CONTRACTOR'S QUALIFICATION STATEMENT	1
	AIA A305 - CONTRACTOR'S QUALIFICATION STATEMENT	
006100	PERFORMANCE BOND AND PAYMENT BOND	1
	AIA A312 - PERFORMANCE AND PAYMENT BONDS	
007000	GENERAL CONDITIONS	1
	AIA A201 - GENERAL CONDITIONS OF THE CONTRACT FOR CONSTRUCTION	
008000	SUPPLEMENTARY CONDITIONS	9
SPECIFICATIONS GROUP		
General Requirements Subgroup		
DIVISION 01 - GENERAL REQUIREMENTS		
010100	SUMMARY OF THE WORK	7
013000	SUBMITTALS AND ADMINISTRATION	8
013100	PROJECT MANAGEMENT AND COORDINATION	11
014000	QUALITY CONTROL	10
015000	TEMPORARY FACILITIES AND CONTROLS	3
016000	PRODUCT REQUIREMENTS	5
017000	CONTRACT CLOSEOUT	2
017100	CLEANING	2
017700	CLOSEOUT PROCEDURES	4
017839	PROJECT RECORD DOCUMENTS	4
Site and Infrastructure Subgroup		
DIVISION 31 - EARTHWORK		
311000	SITE CLEARING	3
315000	EARTHWORK	4
DIVISION 32 - EXTERIOR IMPROVEMENTS		
321313	CONCRETE PAVING	6
321723	PAVEMENT MARKINGS	3

© THE ROBINSON GREEN BERETTA CORPORATION – 6060-9007

SECTION 000000 - INVITATION TO BID

Sealed Bids, one (1) original and one (1) manually signed copy, for the construction and installation of the RIPTA R-Line Stations, will be received by the Rhode Island Public Transit Authority Purchasing Department, in the Authority's Office Building, 705 Elmwood Avenue, Providence, Rhode Island until 1:00 pm, local prevailing time, on March 11, 2014.

Bids will be publicly opened and read aloud at 1:30 pm, local prevailing time, on March 11, 2014 in the Transportation Building Conference Room, 269 Melrose Street, Providence, RI 02907.

Bids will be for a single contract, and shall include general construction, minor excavation and material disposal, concrete installation, prefabricated amenities assembly and installation, and traffic paint striping.

Bid security, in the amount of 5 percent of the proposal, must accompany each proposal in accordance with the Instructions to Bidders. Bid proposals must also be accompanied by a Letter of Intent and all other required documents.

All Bidders are required to execute a Contractor's Qualification Statement, AIA A305, and a Non-Collusive Bidding Certificate on the prescribed form, which is part of the Bid Package.

The successful Bidder will be required to furnish a Performance Bond and a Labor and Materials Payment Bond (AIA Document A311 or other approved document), each in the amount of 100 percent of the contract price.

Attention of the Bidders is called to the requirements to comply with applicable provisions of Bulletin No. 3, State Labor Laws; pertaining to Public Works Projects (General Laws of Rhode Island, Revision of 1956, Chapters 12 and 13 of Title 37 as amended; and Chapter 77, Public Laws of 1956). Said Bulletin and a schedule of the prevailing wages may be obtained at the Office of the Director of Labor of the State of Rhode Island, located at Pontiac Avenue, Cranston, Rhode Island.

Bidding documents, in the form of Drawings and Project Manual, may be examined at the Office of the Architect, The Robinson Green Beretta Corporation, on weekdays between the hours of 9:00 a.m. and 4:00 p.m.

General Contractors may obtain copies of said documents at the Office of the Architect, beginning February 10, 2014, at the time hereinbefore indicated upon receipt of a refundable deposit of $50.00, per set (maximum two sets). Documents must be picked up in person, no documents will be mailed. Make checks payable to the Rhode Island Public Transit Authority. Deposits will be refunded in full if the Bidding Documents are returned within thirty days of the Bid Opening.

A Pre-Bid Conference will be held at RIPTA's Transportation Building Conference Room at 269 Melrose Street, Providence, RI beginning at 1:00 pm on February 20, 2014.

Arrangements for an Interpreter for the hearing impaired can be made for the Pre-Bid Conference, as well as the Bid Opening, by notifying the Purchasing Department at (401) 784-9500, ext. 214, at least seventy-two hours in advance.

The successful Bidder shall comply with the conditions and terms applicable thereunder. The Disadvantaged Business Enterprise (DBE) participation goal for this project is 20%.

No proposal may be withdrawn for a period of ninety (90) calendar days subsequent to the date of the bid opening.
The Owner reserves the right to waive informalities and to reject any and all proposals.

© THE ROBINSON GREEN BERETTA CORPORATION – 6060-9007

SECTION 002000 - INSTRUCTIONS TO BIDDERS

To be considered, proposals or bids must be made in accordance with these Instructions to Bidders.

ARTICLE 1 - DEFINITIONS

Bidding Documents, in the form of Drawings and a Project Manual, include the Advertisement or Invitation to Bid, Instructions to Bidders, the Bid Form, appendix, other sample bidding and contract forms and the proposed Contract Documents including any Addenda issued prior to the execution of the Contract.

Definitions set forth in the General Conditions of the Contract for Construction, AIA Document A201, or in other Contract Documents are applicable to the Bidding Documents.

Addenda are written or graphic instruments issued by the Architect prior to the execution of the Contract which modify or interpret the Bidding Documents by additions, deletions, clarifications or corrections.

A Bid is a complete and properly signed proposal to do the Work for the sums stipulated therein, submitted in accordance with the Bidding Documents.

The Base Bid is the sum stated in the Bid for which the Bidder offers to perform the Work described in the Bidding Documents as the base, to which Work may be added or from which Work may be deleted for sums as selected by RIPTA.

A Unit Price is an amount stated in the Bid as a price per unit of measurement for materials, equipment, or services or a portion of the Work as described in the Bidding Documents.

A Bidder is a person or entity who submits a Bid.

A Sub-Bidder is a person or entity who submits a bid to a Bidder for materials, equipment or labor for a portion of the Work.

ARTICLE 2 - BIDDER'S REPRESENTATIONS

The Bidder, by making a Bid represents:

The Bidder has read and understands the Bidding Documents and the Bid is made in accordance therewith.

The Bidder has read and understands the Bidding or Contract Documents, to the extent that such documentation relates to Work for which the Bid is submitted, for other portions of the Project, if any, being bid concurrently or presently under construction.

The Bidder has visited the Site, become familiar with local conditions under which the Work is to be performed, and has correlated the Bidder's personal observations with the requirements of the proposed Contract Documents.

The Bid is based upon the materials, systems and equipment required by the Bidding Documents, without exception.

It will be presumed that each Bidder submitting a proposal will have inspected the sites, structures and/or amenities, if any, and their existing conditions. The failure to do so will not relieve the Bidder from any obligation with respect to his proposal.

ARTICLE 3 - BIDDING DOCUMENTS

COPIES

© THE ROBINSON GREEN BERETTA CORPORATION – 6060-9007

Bidders may obtain from the Architect (unless other issuing office is designated in the Advertisement or Invitation to Bid) complete sets of Bidding Documents in the number and for the deposit sum, if any, indicated therein. The deposit will be refunded to all Bidders who submit a bona-fide Bid and return the Bidding Documents, in good condition, within ten days after receipt of Bids. The cost of replacement of any missing or damaged documents will be deducted from the deposit.

Bidders shall use complete sets of Bidding Documents in preparing bids; neither the Owner nor the Architect assumes responsibility for errors or misinterpretations resulting from the use of incomplete sets of Bidding Documents.

In making copies of the Bidding Documents available on the above terms, the Owner or Architect do so only for the purpose of obtaining Bids on the Work and do not confer a license or grant permission for any other use of the Bidding Documents.

INTERPRETATION OR CORRECTION OF BIDDING DOCUMENTS

The Bidder shall carefully study and compare the Bidding Documents with each other, and with the Work being bid concurrently or presently under construction to the extent that it relates to the Work for which the Bid is submitted, shall examine the site and local conditions, and shall at once report, to the Architect, errors, inconsistencies or ambiguities discovered.

Bidders requiring clarification of interpretation of the Bidding Documents shall make a written request which shall reach the Architect at least seven days prior to the date of receipt of Bids.
Make all written requests on the form provided hereinafter these Instructions.

No telephonic clarification or interpretation will be made by the Architect.

Interpretations, corrections or changes of the Bidding Documents will be made by Addendum.

Interpretations, corrections or changes of the Bidding Documents by any other manner will not be binding, and Bidders shall not rely upon them.

SUBSTITUTIONS

The materials, products and equipment described in the Bidding Documents establish a standard of required function, dimension, appearance and quality to be met by any proposed substitution.
No substitution will be considered unless (1) an "equal", "or equal", or "approved equal" phrase is so specified; and (2) a written request for approval of a substitution has been received by the Architect on or before February 21, 2014.

Such requests shall include the name of the material or equipment for which it is to be substituted and a complete description of the proposed substitute including drawings, performance and test data and other information necessary for an evaluation. A statement setting forth changes in the material, equipment or other portions of the Work including changes in the Work of other Contracts that incorporation of the proposed substitution would require shall be included. The burden of proof of the merit of the proposed substitution is upon the proposer. The Architect's decision of approval or disapproval of a proposed substitution shall be final.

If the Architect approves any proposed substitution prior to the receipt of Bids, such approval will be set forth in an Addendum. Bidders shall not rely on approvals in any other manner.

No substitutions will be considered after Contract award unless specifically provided in the Contract Documents.

© THE ROBINSON GREEN BERETTA CORPORATION – 6060-9007

ADDENDA

Addenda will be mailed to all known, by the issuing office, to have received a complete set of Bidding Documents.

Copies of Addenda will be made available for inspection wherever Bidding Documents are on file for that purpose.

No Addenda will be issued later than seven days prior to the date for receipt of Bids except an Addendum withdrawing the requests for Bids or one which includes a postponement of the date for receipt of Bids.

Each Bidder shall confirm, prior to submitting a Bid, that the Bidder has received all Addenda issued, and the Bidder shall acknowledge their receipt in the Bid.

ARTICLE 4 - BIDDING PROCEDURES

FORM AND STYLE OF BIDS

Bids shall be submitted, in duplicate, on the forms identical to the form included in the Bidding Documents.

Do not remove the forms from the Bidding Documents.

All blanks on the bid form shall be filled in by typewriter or manually in ink.

Where so indicated by the makeup of the Bid Form, sums shall be expressed in both words and figures, and in case of discrepancy between the two, the written amount shall govern.

Interlineations, alterations and erasures must be initialed by the signer of the Bid.
All requested Alternates (Alternatives) shall be bid.

Where two or more Bids for designated portions of the Work have been requested, the Bidder may, without forfeiture of the bid security, state the Bidder's refusal to accept award of less than the combination of Bids stipulated by the Bidder.

The Bidder shall make no additional stipulations on the bid form nor qualify his Bid in any other manner. Each copy of the Bid shall include the legal name of the Bidder and a statement that the Bidder is a sole proprietor, partnership, corporation, or other legal entity. Each copy shall be signed by the person or persons legally authorized to bind the Bidder to a contract. A Bid by a corporation shall further give the State of incorporation and have the corporate seal affixed. A Bid submitted by an agent shall have a current power of attorney attached, certifying agent's authority to bind the Bidder.

BID SECURITY

If so stipulated in the Advertisement or Invitation to Bid, each Bid shall be accompanied by a bid security in the form and amount required, pledging that the Bidder will enter into a Contract with the Owner on the terms stated in the Bid and will, if required, furnish bonds covering the faithful performance of the Contract and the payment of all obligations arising thereunder. Should the Bidder refuse to enter into such Contract or fail to furnish such bonds if required, the amount of the bid security shall be forfeited to the Owner as liquidated damages, not as a penalty.

If a surety bond is required it shall be written on AIA A310, Bid Bond, unless otherwise provided in the in the Bidding Documents, and the attorney-in-fact who executes the bond on behalf of the surety shall affix to the bond a certified and current copy of the power of attorney.

© THE ROBINSON GREEN BERETTA CORPORATION – 6060-9007

The Owner will have the right to retain the bid security of Bidders until either (a) the Contract has been executed and binds, if required, have been furnished; or (b) the specified time has elapsed so that bids may be withdrawn; or (c) all Bids have been rejected.

SUBMISSION OF BIDS

All copies of the Bid, the bid security, if any, and any other documents required to be submitted with the Bid shall be enclosed in a sealed opaque envelope. The envelope shall be addressed to the party receiving the Bids and shall be identified with the Project Name, the Bidder's name and address and, if applicable, the designated portion of the Work for which the Bid is submitted. If the Bid is sent by mail, the sealed envelope shall be enclosed in a separate mailing envelope with the notation "BID ENCLOSED" on the face thereof.

Bids shall be deposited at the designated location prior to the time and date for receipt of Bids. Bids received after the time and date for receipt of Bids will be returned unopened.

The Bidder shall assume full responsibility for timely delivery at the location designated for receipt of Bids.

Oral, telephonic or telegraphic Bids are invalid and will not receive consideration.

MODIFICATION OR WITHDRAWAL OF BID

A Bid may be modified, withdrawn or canceled by the Bidder during the stipulated time period following the time and date designated for the receipt of Bids, and each Bidder so agrees in submitting a Bid.

Prior to the time and date designated for receipt of Bids, a Bid may be modified or withdrawn by notice to the party receiving Bids at the place designated for receipt of Bids. Such notice shall be in writing over the signature of the Bidder or by telegram; if by telegram, written confirmation over the signature of the Bidder shall be mailed and postmarked on or before the date and time set for the receipt of Bids. A change shall be so worded as not to reveal the amount of the original Bid.

Withdrawn Bids may be resubmitted up to the date and time designated for the receipt of Bids provided that they are then fully in conformance with these Instructions to Bidders.

Bid Security, if required, shall be in an amount sufficient for the Bid as modified or resubmitted.

ARTICLE 5 - CONSIDERATION OF BIDS

OPENING OF BIDS

Unless stated otherwise in the Advertisement or Invitation to Bid, the properly identified Bids received on time will be opened publicly and read aloud. An abstract of the amounts of the Base Bid and major Alternates, if any, will be made available to Bidders. When it has been stated that the Bids will be opened privately, an abstract of the same information may, at the discretion of the Owner, be made available to Bidders within a reasonable time.

REJECTION OF BIDS

The Owner shall have the right to reject any or all Bids, reject a Bid not accompanied by a required bid security or by other data required by the Bidding Documents, or reject a Bid which is in any way incomplete or irregular.

ACCEPTANCE OF BID (AWARD)

It is the intent of the Owner to award a contract to the lowest responsible Bidder provided the Bid has been submitted in accordance with the requirements of the Bidding Documents and does not exceed the

© THE ROBINSON GREEN BERETTA CORPORATION – 6060-9007

funds available. The Owner shall have the right to waive informalities or irregularities in a Bid received and to accept the Bid which, in the Owner's judgment, is in the Owner's own best interest.

It is the intent of the Owner, if he accepts any Alternates (Alternatives), to accept them in the order in which they are listed in the Bid Form, but the Owner shall have the right to accept Alternates in any order or combination and to determine the low Bidder on the basis of the sum of the Base Bid and the Alternates accepted.

ARTICLE 6 - POST-BID INFORMATION

CONTRACTOR'S QUALIFICATION STATEMENT

Bidders to whom award of Contract is under consideration shall submit to the Architect a properly executed AIA Document A305, Contractor's Qualification Statement, unless the statement has been previously required and submitted as a prerequisite to the issuance of Bidding Documents.

SUBMITTALS

Unless waived by the Architect, the Bidder as soon as practicable after notification of selection for the award of a Contract, furnish to the Owner through the Architect in writing: a designation of the Work to be performed with the Bidder's own forces; names of the manufacturers, products and the suppliers of principal items or systems of materials and equipment proposed for the Work; and, names of persons or entities (including those who are to furnish materials or equipment fabricated to a special design) proposed for the principal portions of the Work.

The Bidder will be required to establish to the satisfaction of the Architect and Owner the reliability and responsibility of the persons or entities proposed to furnish and perform the Work described in the Bidding Documents.

Prior to the award of Contract, the Architect will notify the Bidder in writing if either the Owner or the Architect, after due investigation, has reasonable objection to a person or entity proposed by the Bidder. If the Owner or the Architect has reasonable objection to a proposed person or entity, the Bidder may, at the Bidder's option, (1) withdraw the Bid, or (2) submit an acceptable substitute person or entity with an adjustment in the Base Bid or Alternate Bid to cover the difference in cost occasioned by such substitution. The Owner may accept the adjusted bid price or disqualify the Bidder. In the event either withdrawal or disqualification, bid security will not be forfeited.

Persons and entities proposed by the Bidder and to whom the Owner and Architect have made no reasonable objection must be used on the Work for which they were proposed and shall not be changed except with the written consent of the Owner and Architect.

ARTICLE 7 - PERFORMANCE AND PAYMENT BOND

BOND REQUIREMENTS

The Bidder shall furnish a Performance Bond and Payment Bond covering the faithful performance of the Contract and payment of all obligations arising thereunder. Bonds may be secured through the Bidder's usual sources. Include cost and the premiums for same in the Bid.

TIME OF DELIVERY AND FORM OF BONDS

The Bidder shall deliver the required bonds to the Owner not later than three (3) days following the date of execution of the Contract. If the Work is commenced prior thereto in response to a letter of intent, the Bidder shall, prior to commencement of Work, submit evidence of satisfactory to the Owner that such Bonds will be furnished and delivered in accordance with this paragraph.

© THE ROBINSON GREEN BERETTA CORPORATION – 6060-9007

Unless otherwise provided, the bonds shall be written on form of AIA Document A312, Performance Bond and Payment Bond. Both bonds shall be written in the amount of the Contract Sum.

The bonds shall be dated on or after the date of the Contract.

The Bidder shall require the attorney-in-fact who executes the required bonds on behalf of the surety to affix thereto a certified and current copy of the power of attorney.

ARTICLE 8 - FORM OF AGREEMENT BETWEEN OWNER AND CONTRACTOR

FORM TO BE USED

Unless otherwise required in the Bidding Documents, the Agreement for the Work will be written on AIA Document A101, The Standard Form of Agreement Between Owner and Contractor Where the Basis of Payment is a Stipulated Sum.

END OF SECTION 002000

© THE ROBINSON GREEN BERETTA CORPORATION – 6060-9007

SECTION 004100 - BID FORM
Date:_____ **RIPTA BID NO. _____**

To: Rhode Island Public Transit Authority
Purchasing Department
705 Elmwood Avenure
Providence, Rhode Island 02907

Project: RIPTA R-Line Stations
Providence and Pawtucket, Rhode Island

Submitted by: _____
(include address, _____
tel. & FAX nos., _____
and license no.) _____
_____

1. BID

Having examined the Place of The Work and all matters referred to in the Instructions to Bidders, and in the Contract Documents prepared by The Robinson Green Beretta Corporation, Architect for the above mentioned project, we, the undersigned, hereby offer to enter into a Contract to perform the Work for the Sum of:

_____($ _____.)
(written, and numerically)

We have included the required Bid security as required by the Invitation to Bid.

2. ACCEPTANCE

This offer shall be open to acceptance and is irrevocable for ninety (90) days from the bid closing date. If this bid is accepted by the Owner within the time period stated above, we will:

- Execute the Agreement subject to compliance with required State regulatory agency approvals as described in the Invitation to Bid.
- Furnish the required bonds in compliance with amended provisions of the Instructions to Bidders.
- Commence work within seven days after receipt of a Notice to Proceed from the Rhode Island Public Transit Authority.

If this bid is accepted within ninety (90) days, and we fail to commence the Work, or we fail to provide the required Bonds, the security deposit shall be forfeited as damages to the Owner by reason of our failure, limited in amount to the lesser of the face value of the security deposit or the difference between this bid and the bid upon which a Contract is signed.
In the event our bid is not accepted within ninety (90) days, the required security deposit shall be returned to the undersigned, in accordance with the provisions of the Instructions to Bidders; unless a mutually satisfactory arrangement is made for its retention and validity for an extended period of time.

3. CONTRACT TIME

The undersigned agrees to substantially complete the project within 90 calendar days after authorized to proceed.

The undersigned also agrees to totally complete (final completion) the project within 30 days after the date of substantial completion.

In the event that project is uncompleted at the expiration of these periods, liquidated damages of $750.00 per calendar day shall be assessed against the Contractor for each calendar day in excess of the periods of time allotted.

4. UNIT PRICES

The undersigned agrees that the following unit prices are applicable for additional or deductive work required from that as specified or shown on the Contract Documents. The prices herein established are for additional work and include the net cost plus overhead and profit. For reductions in the work (lesser quantities), 88% of the prices will apply. (Contractor to fill-in)

Remove and Dispose of asphalt paving

A. 4000 psi Concrete supply and installation – 6" slab on grade broom finish: _____Per SF

B. Concrete slab demolition and disposal: _____ Per SF

C. Pavement striping: _____ per LF

D. Cost proposal Spreadsheet in Appendix A. Cost of work per station locations.

5. ADDENDA

The following Addenda have been received. The modifications to the Bid Documents noted below have been considered and all costs are included in the Bid Sum.

Addendum No. 1, dated _____.
Addendum No. 2, dated _____.
Addendum No. 3, dated _____.

6. REQUIREMENT FOR LICENSE NUMBER

In compliance with the requirements of the Rhode Island General Laws, Section 5-65-23, my Rhode Island license number for the work to be performed by this firm as a prime contractor is:

License Number: _____

7. ADDITIONAL PROPOSAL PROVISIONS:

In submitting this Bid, the undersigned agrees:

To the allowance percentages for overhead and profit as indicated in the Supplementary Conditions.

To accept the provisions of the Bidding Requirements.

To accept the provisions of the Contract Documents, as defined by Article 1.1.1 of the General Conditions.

To accept that once an successful bidder has been identified based on the entire scope of work, RIPTA may elect not to execute all station locations and may elect to select specific locations based on the cost indicated on the Cost Proposal Spreadsheet form in Appendix A submitted as part of the Bid Form.

To execute a Contract in the form stipulated, within eight (8) calendar days after the receipt of acceptance of this Bid, provided such acceptance is mailed, telegraphed, telephoned or delivered to the undersigned within the time stipulated in the Instructions to Bidders.

8. MISCELLANEOUS PROVISIONS:

In addition to the foregoing, the undersigned:

Has acknowledged receipt of all Addenda by inserting the number of the last Addendum in the first paragraph herein, and;

Has enclosed herewith the required bid security and a properly executed Letter of Intent, which requires the undersigned to execute the Bond prior to the start of any work, and;

Has enclosed the completed Contractor's Qualification Statement, AIA A305, and;

Declares that this proposal in all respects is fair and made without collusion with any other person, firm or corporation making a proposal for this work, and;

Designates as his Office to which such notice of acceptance may be mailed or delivered:

_____

_____.

*_____..

*Insert Bidder's name

If a corporation, give the State of incorporation using the phrase "a corporation organized under the laws of
_____."

If a partnership, give names of partners using also the phrase "co-partners trading and doing business under the firm name and style of

_____."

If an individual using a trade name, give individual name, using also the phrase "an individual doing business under the trade name and style of

_____."

9. BID FORM SIGNATURE(S)

_____ Corporate Seal
(Bidder's name)

By: _____

Title: _____

END OF SECTION 004100

SECTION 004300 - BID SECURITY FORM
AIA Document A310 – 2010 - Bid Bond - Electronic Format, is included, following this page, as an integral part of the Bid documents, for use in fulfilling Bid Security requirements in lieu of submitting a certified check.
END OF SECTION 004300

DRAFT

AIA® Document A310™ – 2010

Bid Bond

CONTRACTOR:
(Name, legal status and address)
« »« »
« »

SURETY:
(Name, legal status and principal place of business)
« »« »
« »

OWNER:
(Name, legal status and address)
« »« »
« »

BOND AMOUNT: $ « »

PROJECT:
(Name, location or address, and Project number, if any)
«RIPTA R-Line Stations
« »
« »

The Contractor and Surety are bound to the Owner in the amount set forth above, for the payment of which the Contractor and Surety bind themselves, their heirs, executors, administrators, successors and assigns, jointly and severally, as provided herein. The conditions of this Bond are such that if the Owner accepts the bid of the Contractor within the time specified in the bid documents, or within such time period as may be agreed to by the Owner and Contractor, and the Contractor either (1) enters into a contract with the Owner in accordance with the terms of such bid, and gives such bond or bonds as may be specified in the bidding or Contract Documents, with a surety admitted in the jurisdiction of the Project and otherwise acceptable to the Owner, for the faithful performance of such Contract and for the prompt payment of labor and material furnished in the prosecution thereof; or (2) pays to the Owner the difference, not to exceed the amount of this Bond, between the amount specified in said bid and such larger amount for which the Owner may in good faith contract with another party to perform the work covered by said bid, then this obligation shall be null and void, otherwise to remain in full force and effect. The Surety hereby waives any notice of an agreement between the Owner and Contractor to extend the time in which the Owner may accept the bid. Waiver of notice by the Surety shall not apply to any extension exceeding sixty (60) days in the aggregate beyond the time for acceptance of bids specified in the bid documents, and the Owner and Contractor shall obtain the Surety's consent for an extension beyond sixty (60) days.

If this Bond is issued in connection with a subcontractor's bid to a Contractor, the term Contractor in this Bond shall be deemed to be Subcontractor and the term Owner shall be deemed to be Contractor.

When this Bond has been furnished to comply with a statutory or other legal requirement in the location of the Project, any provision in this Bond conflicting with said statutory or legal requirement shall be deemed deleted herefrom and provisions conforming to such statutory or other legal requirement shall be deemed incorporated herein. When so furnished, the intent is that this Bond shall be construed as a statutory bond and not as a common law bond.

ADDITIONS AND DELETIONS: The author of this document has added information needed for its completion. The author may also have revised the text of the original AIA standard form. An *Additions and Deletions Report* that notes added information as well as revisions to the standard form text is available from the author and should be reviewed.

This document has important legal consequences. Consultation with an attorney is encouraged with respect to its completion or modification.

Any singular reference to Contractor, Surety, Owner or other party shall be considered plural where applicable.

ELECTRONIC COPYING of any portion of this AIA® Document to another electronic file is prohibited and constitutes a violation of copyright laws as set forth in the footer of this document.

AIA Document A310™ – 2010. Copyright © 1963, 1970 and 2010 by The American Institute of Architects. **All rights reserved. WARNING: This AIA® Document is protected by U.S. Copyright Law and International Treaties. Unauthorized reproduction or distribution of this AIA® Document, or any portion of it, may result in severe civil and criminal penalties, and will be prosecuted to the maximum extent possible under the law.** This draft was produced by AIA software at 12:20:19 on 08/09/2013 under Order No.4849340381_1 which expires on 02/11/2014, and is not for resale.
User Notes: (1316247123)

Signed and sealed this « » day of « » , « »

	« »
	(Contractor as Principal) *(Seal)*
	« »
(Witness)	*(Title)*
	« »
	(Surety) *(Seal)*
	« »
(Witness)	*(Title)*

AIA Document A310™ – 2010. Copyright © 1963, 1970 and 2010 by The American Institute of Architects. **All rights reserved. WARNING: This AIA® Document is protected by U.S. Copyright Law and International Treaties. Unauthorized reproduction or distribution of this AIA® Document, or any portion of it, may result in severe civil and criminal penalties, and will be prosecuted to the maximum extent possible under the law.** This draft was produced by AIA software at 12:20:19 on 08/09/2013 under Order No.4849340381_1 which expires on 02/11/2014, and is not for resale.
User Notes: (1316247123)

SECTION 004500 - LETTER OF INTENT

TO:_____
_____
_____

FOR:_____
_____
_____

Gentlemen:

This is to advise you that the _____
(Legal Name of Surety)
who is authorized to do business in the State of Rhode Island, is prepared to execute a Performance Bond and Labor and Material Payment Bond, AIA Document A311, each in the amount of 100 percent of the Contract, for the _____
(Legal Name of General Bidder)
should they be awarded a contract for the construction of the Para-Transit Maintenance and Storage Facility for the Rhode Island Public Transit Authority.

_____
(Name of Surety)
By:_____
(Authorized Representative)
Title:_____

Date: _____

END OF SECTION 004500

© THE ROBINSON GREEN BERETTA CORPORATION – 6060-9007

SECTION 004600 - BIDDERS INTERPRETATION REQUEST FORM

TO:The Robinson Green Beretta Corporation
50 Holden Street
Providence, Rhode Island 02908
(401-272-1730) Fax: (401-273-7156)
Attn: Project Architect for: The RIPTA R-Line Stations

In accordance with Article 3 of the Instructions to Bidders, the undersigned Bidder requests clarification and/or interpretation of the following:

1. Referring to Drawing No. _____; Specification Section _____, Page No. ____, Line No. _____;

_____
_____
_____
_____

2. Referring to Drawing No. _____; Specification Section _____, Page No. ____, Line No. _____;

_____
_____
_____
_____

3. Referring to Drawing No. _____; Specification Section _____, Page No. ____, Line No. _____;

_____
_____
_____
_____

4. Referring to Drawing No. _____; Specification Section _____, Page No. ____, Line No. _____;

_____
_____
_____
_____

5. Referring to Drawing No. _____; Specification Section _____, Page No. ____, Line No. _____;

_____
_____
_____
_____

Requested By: _____

Address of Bidder: _____

Date: _____

END OF SECTION 004600

© THE ROBINSON GREEN BERETTA CORPORATION – 6060-9007

SECTION 005200 - AGREEMENT FORM

AIA Document A101 Standard Form of Agreement Between Owner and Contractor where the basis of payment is a Stipulated Sum, 2007 Edition, and as amended, forms the basis of Contract between the Owner and the Contractor, and is included, following this page, as an integral part of the Bid Documents. Provisions which are not so amended or supplemented remain in full force and effect.

END OF SECTION 005200

© THE ROBINSON GREEN BERETTA CORPORATION – 6060-9007

DRAFT

AIA® Document A101™ – 2007

Standard Form of Agreement Between Owner and Contractor where the basis of payment is a Stipulated Sum

AGREEMENT made as of the « » day of « » in the year « »
(In words, indicate day, month and year.)

BETWEEN the Owner:
(Name, legal status, address and other information)

« »« »
« »
« »
« »

and the Contractor:
(Name, legal status, address and other information)

« »« »
« »
« »
« »

for the following Project:
(Name, location and detailed description)

«RIPTA R-Line Stations
« »
« »

The Architect:
(Name, legal status, address and other information)

« »« »
« »
« »
« »

The Owner and Contractor agree as follows.

ADDITIONS AND DELETIONS: The author of this document has added information needed for its completion. The author may also have revised the text of the original AIA standard form. An *Additions and Deletions Report* that notes added information as well as revisions to the standard form text is available from the author and should be reviewed.

This document has important legal consequences. Consultation with an attorney is encouraged with respect to its completion or modification.

AIA Document A201™–2007, General Conditions of the Contract for Construction, is adopted in this document by reference. Do not use with other general conditions unless this document is modified.

ELECTRONIC COPYING of any portion of this AIA® Document to another electronic file is prohibited and constitutes a violation of copyright laws as set forth in the footer of this document.

AIA Document A101™ – 2007. Copyright © 1915, 1918, 1925, 1937, 1951, 1958, 1961, 1963, 1967, 1974, 1977, 1987, 1991, 1997 and 2007 by The American Institute of Architects. **All rights reserved. WARNING: This AIA® Document is protected by U.S. Copyright Law and International Treaties. Unauthorized reproduction or distribution of this AIA® Document, or any portion of it, may result in severe civil and criminal penalties, and will be prosecuted to the maximum extent possible under the law.** This draft was produced by AIA software at 12:17:49 on 08/09/2013 under Order No.4849340381_1 which expires on 02/11/2014, and is not for resale.
User Notes: (1416508227)

TABLE OF ARTICLES

1 THE CONTRACT DOCUMENTS

2 THE WORK OF THIS CONTRACT

3 DATE OF COMMENCEMENT AND SUBSTANTIAL COMPLETION

4 CONTRACT SUM

5 PAYMENTS

6 DISPUTE RESOLUTION

7 TERMINATION OR SUSPENSION

8 MISCELLANEOUS PROVISIONS

9 ENUMERATION OF CONTRACT DOCUMENTS

10 INSURANCE AND BONDS

ARTICLE 1 THE CONTRACT DOCUMENTS

The Contract Documents consist of this Agreement, Conditions of the Contract (General, Supplementary and other Conditions), Drawings, Specifications, Addenda issued prior to execution of this Agreement, other documents listed in this Agreement and Modifications issued after execution of this Agreement, all of which form the Contract, and are as fully a part of the Contract as if attached to this Agreement or repeated herein. The Contract represents the entire and integrated agreement between the parties hereto and supersedes prior negotiations, representations or agreements, either written or oral. An enumeration of the Contract Documents, other than a Modification, appears in Article 9.

ARTICLE 2 THE WORK OF THIS CONTRACT

The Contractor shall fully execute the Work described in the Contract Documents, except as specifically indicated in the Contract Documents to be the responsibility of others.

ARTICLE 3 DATE OF COMMENCEMENT AND SUBSTANTIAL COMPLETION

§ 3.1 The date of commencement of the Work shall be the date of this Agreement unless a different date is stated below or provision is made for the date to be fixed in a notice to proceed issued by the Owner.
(Insert the date of commencement if it differs from the date of this Agreement or, if applicable, state that the date will be fixed in a notice to proceed.)

« »

If, prior to the commencement of the Work, the Owner requires time to file mortgages and other security interests, the Owner's time requirement shall be as follows:

« »

§ 3.2 The Contract Time shall be measured from the date of commencement.

§ 3.3 The Contractor shall achieve Substantial Completion of the entire Work not later than « » (« ») days from the date of commencement, or as follows:
(Insert number of calendar days. Alternatively, a calendar date may be used when coordinated with the date of commencement. If appropriate, insert requirements for earlier Substantial Completion of certain portions of the Work.)

AIA Document A101™ – 2007. Copyright © 1915, 1918, 1925, 1937, 1951, 1958, 1961, 1963, 1967, 1974, 1977, 1987, 1991, 1997 and 2007 by The American Institute of Architects. **All rights reserved. WARNING: This AIA® Document is protected by U.S. Copyright Law and International Treaties. Unauthorized reproduction or distribution of this AIA® Document, or any portion of it, may result in severe civil and criminal penalties, and will be prosecuted to the maximum extent possible under the law.** This draft was produced by AIA software at 12:17:49 on 08/09/2013 under Order No.4849340381_1 which expires on 02/11/2014, and is not for resale.
User Notes: (1416508227)

« »

Portion of Work	Substantial Completion Date

, subject to adjustments of this Contract Time as provided in the Contract Documents.
(Insert provisions, if any, for liquidated damages relating to failure to achieve Substantial Completion on time or for bonus payments for early completion of the Work.)

« »

ARTICLE 4 CONTRACT SUM

§ 4.1 The Owner shall pay the Contractor the Contract Sum in current funds for the Contractor's performance of the Contract. The Contract Sum shall be « » ($ « »), subject to additions and deductions as provided in the Contract Documents.

§ 4.2 The Contract Sum is based upon the following alternates, if any, which are described in the Contract Documents and are hereby accepted by the Owner:
(State the numbers or other identification of accepted alternates. If the bidding or proposal documents permit the Owner to accept other alternates subsequent to the execution of this Agreement, attach a schedule of such other alternates showing the amount for each and the date when that amount expires.)

« »

§ 4.3 Unit prices, if any:
(Identify and state the unit price; state quantity limitations, if any, to which the unit price will be applicable.)

Item	Units and Limitations	Price Per Unit ($0.00)

§ 4.4 Allowances included in the Contract Sum, if any:
(Identify allowance and state exclusions, if any, from the allowance price.)

Item	Price

ARTICLE 5 PAYMENTS

§ 5.1 PROGRESS PAYMENTS

§ 5.1.1 Based upon Applications for Payment submitted to the Architect by the Contractor and Certificates for Payment issued by the Architect, the Owner shall make progress payments on account of the Contract Sum to the Contractor as provided below and elsewhere in the Contract Documents.

§ 5.1.2 The period covered by each Application for Payment shall be one calendar month ending on the last day of the month, or as follows:

« »

§ 5.1.3 Provided that an Application for Payment is received by the Architect not later than the « » day of a month, the Owner shall make payment of the certified amount to the Contractor not later than the « » day of the « » month. If an Application for Payment is received by the Architect after the application date fixed above, payment shall be made by the Owner not later than « » (« ») days after the Architect receives the Application for Payment.
(Federal, state or local laws may require payment within a certain period of time.)

§ 5.1.4 Each Application for Payment shall be based on the most recent schedule of values submitted by the Contractor in accordance with the Contract Documents. The schedule of values shall allocate the entire Contract Sum among the various portions of the Work. The schedule of values shall be prepared in such form and supported

AIA Document A101™ – 2007. Copyright © 1915, 1918, 1925, 1937, 1951, 1958, 1961, 1963, 1967, 1974, 1977, 1987, 1991, 1997 and 2007 by The American Institute of Architects. **All rights reserved. WARNING: This AIA® Document is protected by U.S. Copyright Law and International Treaties. Unauthorized reproduction or distribution of this AIA® Document, or any portion of it, may result in severe civil and criminal penalties, and will be prosecuted to the maximum extent possible under the law.** This draft was produced by AIA software at 12:17:49 on 08/09/2013 under Order No.4849340381_1 which expires on 02/11/2014, and is not for resale.
User Notes: (1416508227)

by such data to substantiate its accuracy as the Architect may require. This schedule, unless objected to by the Architect, shall be used as a basis for reviewing the Contractor's Applications for Payment.

§ 5.1.5 Applications for Payment shall show the percentage of completion of each portion of the Work as of the end of the period covered by the Application for Payment.

§ 5.1.6 Subject to other provisions of the Contract Documents, the amount of each progress payment shall be computed as follows:

.1 Take that portion of the Contract Sum properly allocable to completed Work as determined by multiplying the percentage completion of each portion of the Work by the share of the Contract Sum allocated to that portion of the Work in the schedule of values, less retainage of « » percent (« » %). Pending final determination of cost to the Owner of changes in the Work, amounts not in dispute shall be included as provided in Section 7.3.9 of AIA Document A201™–2007, General Conditions of the Contract for Construction;

.2 Add that portion of the Contract Sum properly allocable to materials and equipment delivered and suitably stored at the site for subsequent incorporation in the completed construction (or, if approved in advance by the Owner, suitably stored off the site at a location agreed upon in writing), less retainage of « » percent (« » %);

.3 Subtract the aggregate of previous payments made by the Owner; and

.4 Subtract amounts, if any, for which the Architect has withheld or nullified a Certificate for Payment as provided in Section 9.5 of AIA Document A201–2007.

§ 5.1.7 The progress payment amount determined in accordance with Section 5.1.6 shall be further modified under the following circumstances:

.1 Add, upon Substantial Completion of the Work, a sum sufficient to increase the total payments to the full amount of the Contract Sum, less such amounts as the Architect shall determine for incomplete Work, retainage applicable to such work and unsettled claims; and
(Section 9.8.5 of AIA Document A201–2007 requires release of applicable retainage upon Substantial Completion of Work with consent of surety, if any.)

.2 Add, if final completion of the Work is thereafter materially delayed through no fault of the Contractor, any additional amounts payable in accordance with Section 9.10.3 of AIA Document A201–2007.

§ 5.1.8 Reduction or limitation of retainage, if any, shall be as follows:
(If it is intended, prior to Substantial Completion of the entire Work, to reduce or limit the retainage resulting from the percentages inserted in Sections 5.1.6.1 and 5.1.6.2 above, and this is not explained elsewhere in the Contract Documents, insert here provisions for such reduction or limitation.)

« »

§ 5.1.9 Except with the Owner's prior approval, the Contractor shall not make advance payments to suppliers for materials or equipment which have not been delivered and stored at the site.

§ 5.2 FINAL PAYMENT

§ 5.2.1 Final payment, constituting the entire unpaid balance of the Contract Sum, shall be made by the Owner to the Contractor when

.1 the Contractor has fully performed the Contract except for the Contractor's responsibility to correct Work as provided in Section 12.2.2 of AIA Document A201–2007, and to satisfy other requirements, if any, which extend beyond final payment; and

.2 a final Certificate for Payment has been issued by the Architect.

§ 5.2.2 The Owner's final payment to the Contractor shall be made no later than 30 days after the issuance of the Architect's final Certificate for Payment, or as follows:

« »

AIA Document A101™ – 2007. Copyright © 1915, 1918, 1925, 1937, 1951, 1958, 1961, 1963, 1967, 1974, 1977, 1987, 1991, 1997 and 2007 by The American Institute of Architects. **All rights reserved. WARNING: This AIA® Document is protected by U.S. Copyright Law and International Treaties. Unauthorized reproduction or distribution of this AIA® Document, or any portion of it, may result in severe civil and criminal penalties, and will be prosecuted to the maximum extent possible under the law.** This draft was produced by AIA software at 12:17:49 on 08/09/2013 under Order No.4849340381_1 which expires on 02/11/2014, and is not for resale.
User Notes: (1416508227)

ARTICLE 6 DISPUTE RESOLUTION

§ 6.1 INITIAL DECISION MAKER

The Architect will serve as Initial Decision Maker pursuant to Section 15.2 of AIA Document A201–2007, unless the parties appoint below another individual, not a party to this Agreement, to serve as Initial Decision Maker.
(If the parties mutually agree, insert the name, address and other contact information of the Initial Decision Maker, if other than the Architect.)

« »
« »
« »
« »

§ 6.2 BINDING DISPUTE RESOLUTION

For any Claim subject to, but not resolved by, mediation pursuant to Section 15.3 of AIA Document A201–2007, the method of binding dispute resolution shall be as follows:
(Check the appropriate box. If the Owner and Contractor do not select a method of binding dispute resolution below, or do not subsequently agree in writing to a binding dispute resolution method other than litigation, Claims will be resolved by litigation in a court of competent jurisdiction.)

[« »] Arbitration pursuant to Section 15.4 of AIA Document A201–2007

[« »] Litigation in a court of competent jurisdiction

[« »] Other *(Specify)*

« »

ARTICLE 7 TERMINATION OR SUSPENSION

§ 7.1 The Contract may be terminated by the Owner or the Contractor as provided in Article 14 of AIA Document A201–2007.

§ 7.2 The Work may be suspended by the Owner as provided in Article 14 of AIA Document A201–2007.

ARTICLE 8 MISCELLANEOUS PROVISIONS

§ 8.1 Where reference is made in this Agreement to a provision of AIA Document A201–2007 or another Contract Document, the reference refers to that provision as amended or supplemented by other provisions of the Contract Documents.

§ 8.2 Payments due and unpaid under the Contract shall bear interest from the date payment is due at the rate stated below, or in the absence thereof, at the legal rate prevailing from time to time at the place where the Project is located.
(Insert rate of interest agreed upon, if any.)

« » % « »

§ 8.3 The Owner's representative:
(Name, address and other information)

« »
« »
« »
« »
« »
« »

§ 8.4 The Contractor's representative:
(Name, address and other information)

AIA Document A101™ – 2007. Copyright © 1915, 1918, 1925, 1937, 1951, 1958, 1961, 1963, 1967, 1974, 1977, 1987, 1991, 1997 and 2007 by The American Institute of Architects. **All rights reserved. WARNING: This AIA® Document is protected by U.S. Copyright Law and International Treaties. Unauthorized reproduction or distribution of this AIA® Document, or any portion of it, may result in severe civil and criminal penalties, and will be prosecuted to the maximum extent possible under the law.** This draft was produced by AIA software at 12:17:49 on 08/09/2013 under Order No.4849340381_1 which expires on 02/11/2014, and is not for resale.
User Notes: (1416508227)

« »
« »
« »
« »
« »
« »

§ 8.5 Neither the Owner's nor the Contractor's representative shall be changed without ten days written notice to the other party.

§ 8.6 Other provisions:

« »

ARTICLE 9 ENUMERATION OF CONTRACT DOCUMENTS

§ 9.1 The Contract Documents, except for Modifications issued after execution of this Agreement, are enumerated in the sections below.

§ 9.1.1 The Agreement is this executed AIA Document A101–2007, Standard Form of Agreement Between Owner and Contractor.

§ 9.1.2 The General Conditions are AIA Document A201–2007, General Conditions of the Contract for Construction.

§ 9.1.3 The Supplementary and other Conditions of the Contract:

Document	Title	Date	Pages

§ 9.1.4 The Specifications:
(Either list the Specifications here or refer to an exhibit attached to this Agreement.)
« »

Section	Title	Date	Pages

§ 9.1.5 The Drawings:
(Either list the Drawings here or refer to an exhibit attached to this Agreement.)
« »

Number	Title	Date

§ 9.1.6 The Addenda, if any:

Number	Date	Pages

Portions of Addenda relating to bidding requirements are not part of the Contract Documents unless the bidding requirements are also enumerated in this Article 9.

§ 9.1.7 Additional documents, if any, forming part of the Contract Documents:

.1 AIA Document E201™–2007, Digital Data Protocol Exhibit, if completed by the parties, or the following:

AIA Document A101™ – 2007. Copyright © 1915, 1918, 1925, 1937, 1951, 1958, 1961, 1963, 1967, 1974, 1977, 1987, 1991, 1997 and 2007 by The American Institute of Architects. **All rights reserved. WARNING: This AIA® Document is protected by U.S. Copyright Law and International Treaties. Unauthorized reproduction or distribution of this AIA® Document, or any portion of it, may result in severe civil and criminal penalties, and will be prosecuted to the maximum extent possible under the law.** This draft was produced by AIA software at 12:17:49 on 08/09/2013 under Order No.4849340381_1 which expires on 02/11/2014, and is not for resale.
User Notes: (1416508227)

« »

.2 Other documents, if any, listed below:
(List here any additional documents that are intended to form part of the Contract Documents. AIA Document A201–2007 provides that bidding requirements such as advertisement or invitation to bid, Instructions to Bidders, sample forms and the Contractor's bid are not part of the Contract Documents unless enumerated in this Agreement. They should be listed here only if intended to be part of the Contract Documents.)

« »

ARTICLE 10 INSURANCE AND BONDS

The Contractor shall purchase and maintain insurance and provide bonds as set forth in Article 11 of AIA Document A201–2007.
(State bonding requirements, if any, and limits of liability for insurance required in Article 11 of AIA Document A201–2007.)

Type of insurance or bond	Limit of liability or bond amount ($0.00)

This Agreement entered into as of the day and year first written above.

OWNER *(Signature)*	**CONTRACTOR** *(Signature)*
« »« »	« »« »
(Printed name and title)	*(Printed name and title)*

AIA Document A101™ – 2007. Copyright © 1915, 1918, 1925, 1937, 1951, 1958, 1961, 1963, 1967, 1974, 1977, 1987, 1991, 1997 and 2007 by The American Institute of Architects. **All rights reserved. WARNING: This AIA® Document is protected by U.S. Copyright Law and International Treaties. Unauthorized reproduction or distribution of this AIA® Document, or any portion of it, may result in severe civil and criminal penalties, and will be prosecuted to the maximum extent possible under the law.** This draft was produced by AIA software at 12:17:49 on 08/09/2013 under Order No.4849340381_1 which expires on 02/11/2014, and is not for resale.
User Notes: (1416508227)

SECTION 005500 - CONTRACTOR'S QUALIFICATION STATEMENT

AIA Document A305 Contractor's Qualification Statement, 1986 Edition, is included following this page, as an integral part of the Bid Documents. Provisions which are not so amended or supplemented remain in full force and effect.

END OF SECTION 005500

© THE ROBINSON GREEN BERETTA CORPORATION – 6060-9007

DRAFT

AIA® Document A305™ – 1986

Contractor's Qualification Statement

The Undersigned certifies under oath that the information provided herein is true and sufficiently complete so as not to be misleading.

SUBMITTED TO: « »

ADDRESS: « »

SUBMITTED BY: « »

NAME: « »

ADDRESS: « »

PRINCIPAL OFFICE: « »

[« »] Corporation

[« »] Partnership

[« »] Individual

[« »] Joint Venture

[« »] Other « »

NAME OF PROJECT: *(if applicable)* RIPTA R-Line Stations

TYPE OF WORK: *(file separate form for each Classification of Work)*

[« »] General Construction

[« »] HVAC

[« »] Electrical

[« »] Plumbing

[« »] Other: *(Specify)* « »

§ 1 ORGANIZATION

§ 1.1 How many years has your organization been in business as a Contractor? « »

§ 1.2 How many years has your organization been in business under its present business name? « »

§ 1.2.1 Under what other or former names has your organization operated?

« »

§ 1.3 If your organization is a corporation, answer the following:

§ 1.3.1 Date of incorporation: « »

§ 1.3.2 State of incorporation: « »

ADDITIONS AND DELETIONS: The author of this document has added information needed for its completion. The author may also have revised the text of the original AIA standard form. An *Additions and Deletions Report* that notes added information as well as revisions to the standard form text is available from the author and should be reviewed.

This document has important legal consequences. Consultation with an attorney is encouraged with respect to its completion or modification.

This form is approved and recommended by the American Institute of Architects (AIA) and The Associated General Contractors of America (AGC) for use in evaluating the qualifications of contractors. No endorsement of the submitting party or verification of the information is made by AIA or AGC.

ELECTRONIC COPYING of any portion of this AIA® Document to another electronic file is prohibited and constitutes a violation of copyright laws as set forth in the footer of this document.

AIA Document A305™ – 1986. Copyright © 1964, 1969, 1979 and 1986 by The American Institute of Architects. **All rights reserved. WARNING: This AIA® Document is protected by U.S. Copyright Law and International Treaties. Unauthorized reproduction or distribution of this AIA® Document, or any portion of it, may result in severe civil and criminal penalties, and will be prosecuted to the maximum extent possible under the law.** This draft was produced by AIA software at 12:19:35 on 08/09/2013 under Order No.4849340381_1 which expires on 02/11/2014, and is not for resale.
User Notes: (1382695505)

§ 1.3.3 President's name: « »
§ 1.3.4 Vice-president's name(s)

« »

§ 1.3.5 Secretary's name: « »
§ 1.3.6 Treasurer's name: « »

§ 1.4 If your organization is a partnership, answer the following:
§ 1.4.1 Date of organization: « »
§ 1.4.2 Type of partnership (if applicable): « »
§ 1.4.3 Name(s) of general partner(s)

« »

§ 1.5 If your organization is individually owned, answer the following:
§ 1.5.1 Date of organization: « »
§ 1.5.2 Name of owner:

« »

§ 1.6 If the form of your organization is other than those listed above, describe it and name the principals:

« »

§ 2 LICENSING
§ 2.1 List jurisdictions and trade categories in which your organization is legally qualified to do business, and indicate registration or license numbers, if applicable.

« »

§ 2.2 List jurisdictions in which your organization's partnership or trade name is filed.

« »

§ 3 EXPERIENCE
§ 3.1 List the categories of work that your organization normally performs with its own forces.

« »

§ 3.2 Claims and Suits. (If the answer to any of the questions below is yes, please attach details.)
§ 3.2.1 Has your organization ever failed to complete any work awarded to it?

« »

§ 3.2.2 Are there any judgments, claims, arbitration proceedings or suits pending or outstanding against your organization or its officers?

« »

§ 3.2.3 Has your organization filed any law suits or requested arbitration with regard to construction contracts within the last five years?

« »

§ 3.3 Within the last five years, has any officer or principal of your organization ever been an officer or principal of another organization when it failed to complete a construction contract? (If the answer is yes, please attach details.)

AIA Document A305™ – 1986. Copyright © 1964, 1969, 1979 and 1986 by The American Institute of Architects. **All rights reserved. WARNING: This AIA® Document is protected by U.S. Copyright Law and International Treaties. Unauthorized reproduction or distribution of this AIA® Document, or any portion of it, may result in severe civil and criminal penalties, and will be prosecuted to the maximum extent possible under the law.** This draft was produced by AIA software at 12:19:35 on 08/09/2013 under Order No.4849340381_1 which expires on 02/11/2014, and is not for resale.
User Notes: (1382695505)

« »

§ 3.4 On a separate sheet, list major construction projects your organization has in progress, giving the name of project, owner, architect, contract amount, percent complete and scheduled completion date.

« »

§ 3.4.1 State total worth of work in progress and under contract:

« »

§ 3.5 On a separate sheet, list the major projects your organization has completed in the past five years, giving the name of project, owner, architect, contract amount, date of completion and percentage of the cost of the work performed with your own forces.

« »

§ 3.5.1 State average annual amount of construction work performed during the past five years:

« »

§ 3.6 On a separate sheet, list the construction experience and present commitments of the key individuals of your organization.

« »

§ 4 REFERENCES

§ 4.1 Trade References:

« »

§ 4.2 Bank References:

« »

§ 4.3 Surety:

§ 4.3.1 Name of bonding company:

« »

§ 4.3.2 Name and address of agent:

« »

§ 5 FINANCING

§ 5.1 Financial Statement.

§ 5.1.1 Attach a financial statement, preferably audited, including your organization's latest balance sheet and income statement showing the following items:

Current Assets (e.g., cash, joint venture accounts, accounts receivable, notes receivable, accrued income, deposits, materials inventory and prepaid expenses);

Net Fixed Assets;

Other Assets;

AIA Document A305™ – 1986. Copyright © 1964, 1969, 1979 and 1986 by The American Institute of Architects. **All rights reserved. WARNING: This AIA® Document is protected by U.S. Copyright Law and International Treaties. Unauthorized reproduction or distribution of this AIA® Document, or any portion of it, may result in severe civil and criminal penalties, and will be prosecuted to the maximum extent possible under the law.** This draft was produced by AIA software at 12:19:35 on 08/09/2013 under Order No.4849340381_1 which expires on 02/11/2014, and is not for resale.
User Notes: (1382695505)

Current Liabilities (e.g., accounts payable, notes payable, accrued expenses, provision for income taxes, advances, accrued salaries and accrued payroll taxes);

Other Liabilities (e.g., capital, capital stock, authorized and outstanding shares par values, earned surplus and retained earnings).

§ 5.1.2 Name and address of firm preparing attached financial statement, and date thereof:

« »

§ 5.1.3 Is the attached financial statement for the identical organization named on page one?

« »

§ 5.1.4 If not, explain the relationship and financial responsibility of the organization whose financial statement is provided (e.g., parent-subsidiary).

« »

§ 5.2 Will the organization whose financial statement is attached act as guarantor of the contract for construction?

« »

§ 6 SIGNATURE

§ 6.1 Dated at this « » day of « » « »

Name of Organization: « »

By: « »

Title: « »

§ 6.2

« »

M « » being duly sworn deposes and says that the information provided herein is true and sufficiently complete so as not to be misleading.

Subscribed and sworn before me this « » day of « » « »

Notary Public: « »

My Commission Expires: « »

AIA Document A305™ – 1986. Copyright © 1964, 1969, 1979 and 1986 by The American Institute of Architects. **All rights reserved.** **WARNING: This AIA® Document is protected by U.S. Copyright Law and International Treaties. Unauthorized reproduction or distribution of this AIA® Document, or any portion of it, may result in severe civil and criminal penalties, and will be prosecuted to the maximum extent possible under the law.** This draft was produced by AIA software at 12:19:35 on 08/09/2013 under Order No.4849340381_1 which expires on 02/11/2014, and is not for resale.
User Notes: (1382695505)

SECTION 006100 - PERFORMANCE BOND AND PAYMENT BOND

1. PERFORMANCE BOND

AIA Document A312 - Performance Bond - December 1984 Edition is included, following this page, as an integral part of the Bid documents, and issues of this form, signed and executed by the successful Bidder and Surety, will be bound into the executed Contract copies of the Project Manual.

2. PAYMENT BOND

AIA Document A312 - Payment Bond - December 1984 Edition is included, following this page, as an integral part of the Bid Documents, and issues of this form, signed and executed by the successful Bidder and Surety, will be bound into the executed Contract copies of the Project Manual

END OF SECTION 006100

© THE ROBINSON GREEN BERETTA CORPORATION – 6060-9007

DRAFT

AIA® Document A312™ – 2010

Payment Bond

CONTRACTOR:
(Name, legal status and address)

« »« »
« »

SURETY:
(Name, legal status and principal place of business)

« »« »
« »

OWNER:
(Name, legal status and address)

« »« »
« »

CONSTRUCTION CONTRACT
Date: « »
Amount: $ « »
Description:
(Name and location)

«RIPTA R-Line Stations
« »

BOND
Date:
(Not earlier than Construction Contract Date)
« »
Amount: $ « »
Modifications to this Bond: « » None « » See Section 18

CONTRACTOR AS PRINCIPAL
Company: *(Corporate Seal)*

Signature: _____
Name and Title: « »« »

SURETY
Company: *(Corporate Seal)*

Signature: _____
Name and Title: « »« »

(Any additional signatures appear on the last page of this Payment Bond.)

(FOR INFORMATION ONLY — Name, address and telephone)

AGENT or **BROKER:**

« »
« »
« »

OWNER'S REPRESENTATIVE:
(Architect, Engineer or other party:)

« »
« »
« »
« »
« »
« »

ADDITIONS AND DELETIONS: The author of this document has added information needed for its completion. The author may also have revised the text of the original AIA standard form. An *Additions and Deletions Report* that notes added information as well as revisions to the standard form text is available from the author and should be reviewed.

This document has important legal consequences. Consultation with an attorney is encouraged with respect to its completion or modification.

Any singular reference to Contractor, Surety, Owner or other party shall be considered plural where applicable.

DRAFT

ELECTRONIC COPYING of any portion of this AIA® Document to another electronic file is prohibited and constitutes a violation of copyright laws as set forth in the footer of this document.

AIA Document A312™ – 2010 Payment Bond. The American Institute of Architects. **All rights reserved. WARNING: This AIA® Document is protected by U.S. Copyright Law and International Treaties. Unauthorized reproduction or distribution of this AIA® Document, or any portion of it, may result in severe civil and criminal penalties, and will be prosecuted to the maximum extent possible under the law.**
This draft was produced by AIA software at 12:23:39 on 08/09/2013 under Order No.4849340381_1 which expires on 02/11/2014, and is not for resale.
User Notes: (1865896774)

§ 1 The Contractor and Surety, jointly and severally, bind themselves, their heirs, executors, administrators, successors and assigns to the Owner to pay for labor, materials and equipment furnished for use in the performance of the Construction Contract, which is incorporated herein by reference, subject to the following terms.

§ 2 If the Contractor promptly makes payment of all sums due to Claimants, and defends, indemnifies and holds harmless the Owner from claims, demands, liens or suits by any person or entity seeking payment for labor, materials or equipment furnished for use in the performance of the Construction Contract, then the Surety and the Contractor shall have no obligation under this Bond.

§ 3 If there is no Owner Default under the Construction Contract, the Surety's obligation to the Owner under this Bond shall arise after the Owner has promptly notified the Contractor and the Surety (at the address described in Section 13) of claims, demands, liens or suits against the Owner or the Owner's property by any person or entity seeking payment for labor, materials or equipment furnished for use in the performance of the Construction Contract and tendered defense of such claims, demands, liens or suits to the Contractor and the Surety.

§ 4 When the Owner has satisfied the conditions in Section 3, the Surety shall promptly and at the Surety's expense defend, indemnify and hold harmless the Owner against a duly tendered claim, demand, lien or suit.

§ 5 The Surety's obligations to a Claimant under this Bond shall arise after the following:

§ 5.1 Claimants, who do not have a direct contract with the Contractor,

- **.1** have furnished a written notice of non-payment to the Contractor, stating with substantial accuracy the amount claimed and the name of the party to whom the materials were, or equipment was, furnished or supplied or for whom the labor was done or performed, within ninety (90) days after having last performed labor or last furnished materials or equipment included in the Claim; and
- **.2** have sent a Claim to the Surety (at the address described in Section 13).

§ 5.2 Claimants, who are employed by or have a direct contract with the Contractor, have sent a Claim to the Surety (at the address described in Section 13).

§ 6 If a notice of non-payment required by Section 5.1.1 is given by the Owner to the Contractor, that is sufficient to satisfy a Claimant's obligation to furnish a written notice of non-payment under Section 5.1.1.

§ 7 When a Claimant has satisfied the conditions of Sections 5.1 or 5.2, whichever is applicable, the Surety shall promptly and at the Surety's expense take the following actions:

§ 7.1 Send an answer to the Claimant, with a copy to the Owner, within sixty (60) days after receipt of the Claim, stating the amounts that are undisputed and the basis for challenging any amounts that are disputed; and

§ 7.2 Pay or arrange for payment of any undisputed amounts.

§ 7.3 The Surety's failure to discharge its obligations under Section 7.1 or Section 7.2 shall not be deemed to constitute a waiver of defenses the Surety or Contractor may have or acquire as to a Claim, except as to undisputed amounts for which the Surety and Claimant have reached agreement. If, however, the Surety fails to discharge its obligations under Section 7.1 or Section 7.2, the Surety shall indemnify the Claimant for the reasonable attorney's fees the Claimant incurs thereafter to recover any sums found to be due and owing to the Claimant.

§ 8 The Surety's total obligation shall not exceed the amount of this Bond, plus the amount of reasonable attorney's fees provided under Section 7.3, and the amount of this Bond shall be credited for any payments made in good faith by the Surety.

§ 9 Amounts owed by the Owner to the Contractor under the Construction Contract shall be used for the performance of the Construction Contract and to satisfy claims, if any, under any construction performance bond. By the Contractor furnishing and the Owner accepting this Bond, they agree that all funds earned by the Contractor in the performance of the Construction Contract are dedicated to satisfy obligations of the Contractor and Surety under this Bond, subject to the Owner's priority to use the funds for the completion of the work.

AIA Document A312™ – 2010 Payment Bond. The American Institute of Architects. **All rights reserved. WARNING: This AIA® Document is protected by U.S. Copyright Law and International Treaties. Unauthorized reproduction or distribution of this AIA® Document, or any portion of it, may result in severe civil and criminal penalties, and will be prosecuted to the maximum extent possible under the law.**
This draft was produced by AIA software at 12:23:39 on 08/09/2013 under Order No.4849340381_1 which expires on 02/11/2014, and is not for resale.
User Notes: (1865896774)

§ 10 The Surety shall not be liable to the Owner, Claimants or others for obligations of the Contractor that are unrelated to the Construction Contract. The Owner shall not be liable for the payment of any costs or expenses of any Claimant under this Bond, and shall have under this Bond no obligation to make payments to, or give notice on behalf of, Claimants or otherwise have any obligations to Claimants under this Bond.

§ 11 The Surety hereby waives notice of any change, including changes of time, to the Construction Contract or to related subcontracts, purchase orders and other obligations.

§ 12 No suit or action shall be commenced by a Claimant under this Bond other than in a court of competent jurisdiction in the state in which the project that is the subject of the Construction Contract is located or after the expiration of one year from the date (1) on which the Claimant sent a Claim to the Surety pursuant to Section 5.1.2 or 5.2, or (2) on which the last labor or service was performed by anyone or the last materials or equipment were furnished by anyone under the Construction Contract, whichever of (1) or (2) first occurs. If the provisions of this Paragraph are void or prohibited by law, the minimum period of limitation available to sureties as a defense in the jurisdiction of the suit shall be applicable.

§ 13 Notice and Claims to the Surety, the Owner or the Contractor shall be mailed or delivered to the address shown on the page on which their signature appears. Actual receipt of notice or Claims, however accomplished, shall be sufficient compliance as of the date received.

§ 14 When this Bond has been furnished to comply with a statutory or other legal requirement in the location where the construction was to be performed, any provision in this Bond conflicting with said statutory or legal requirement shall be deemed deleted herefrom and provisions conforming to such statutory or other legal requirement shall be deemed incorporated herein. When so furnished, the intent is that this Bond shall be construed as a statutory bond and not as a common law bond.

§ 15 Upon request by any person or entity appearing to be a potential beneficiary of this Bond, the Contractor and Owner shall promptly furnish a copy of this Bond or shall permit a copy to be made.

§ 16 Definitions

§ 16.1 Claim. A written statement by the Claimant including at a minimum:

- **.1** the name of the Claimant;
- **.2** the name of the person for whom the labor was done, or materials or equipment furnished;
- **.3** a copy of the agreement or purchase order pursuant to which labor, materials or equipment was furnished for use in the performance of the Construction Contract;
- **.4** a brief description of the labor, materials or equipment furnished;
- **.5** the date on which the Claimant last performed labor or last furnished materials or equipment for use in the performance of the Construction Contract;
- **.6** the total amount earned by the Claimant for labor, materials or equipment furnished as of the date of the Claim;
- **.7** the total amount of previous payments received by the Claimant; and
- **.8** the total amount due and unpaid to the Claimant for labor, materials or equipment furnished as of the date of the Claim.

§ 16.2 Claimant. An individual or entity having a direct contract with the Contractor or with a subcontractor of the Contractor to furnish labor, materials or equipment for use in the performance of the Construction Contract. The term Claimant also includes any individual or entity that has rightfully asserted a claim under an applicable mechanic's lien or similar statute against the real property upon which the Project is located. The intent of this Bond shall be to include without limitation in the terms "labor, materials or equipment" that part of water, gas, power, light, heat, oil, gasoline, telephone service or rental equipment used in the Construction Contract, architectural and engineering services required for performance of the work of the Contractor and the Contractor's subcontractors, and all other items for which a mechanic's lien may be asserted in the jurisdiction where the labor, materials or equipment were furnished.

§ 16.3 Construction Contract. The agreement between the Owner and Contractor identified on the cover page, including all Contract Documents and all changes made to the agreement and the Contract Documents.

AIA Document A312™ – 2010 Payment Bond. The American Institute of Architects. **All rights reserved. WARNING: This AIA® Document is protected by U.S. Copyright Law and International Treaties. Unauthorized reproduction or distribution of this AIA® Document, or any portion of it, may result in severe civil and criminal penalties, and will be prosecuted to the maximum extent possible under the law.** This draft was produced by AIA software at 12:23:39 on 08/09/2013 under Order No.4849340381_1 which expires on 02/11/2014, and is not for resale.
User Notes: (1865896774)

§ 16.4 Owner Default. Failure of the Owner, which has not been remedied or waived, to pay the Contractor as required under the Construction Contract or to perform and complete or comply with the other material terms of the Construction Contract.

§ 16.5 Contract Documents. All the documents that comprise the agreement between the Owner and Contractor.

§ 17 If this Bond is issued for an agreement between a Contractor and subcontractor, the term Contractor in this Bond shall be deemed to be Subcontractor and the term Owner shall be deemed to be Contractor.

§ 18 Modifications to this bond are as follows:

« »

(Space is provided below for additional signatures of added parties, other than those appearing on the cover page.)

CONTRACTOR AS PRINCIPAL		**SURETY**	
Company:	*(Corporate Seal)*	Company:	*(Corporate Seal)*
Signature:		Signature:	
Name and Title:	« »« »	Name and Title:	« »« »
Address:	« »	Address:	« »

AIA Document A312™ – 2010 Payment Bond. The American Institute of Architects. **All rights reserved. WARNING: This AIA® Document is protected by U.S. Copyright Law and International Treaties. Unauthorized reproduction or distribution of this AIA® Document, or any portion of it, may result in severe civil and criminal penalties, and will be prosecuted to the maximum extent possible under the law.** This draft was produced by AIA software at 12:23:39 on 08/09/2013 under Order No.4849340381_1 which expires on 02/11/2014, and is not for resale.
User Notes: (1865896774)

SECTION 007000 - GENERAL CONDITIONS

AIA Document A201 - General Conditions of the Contract for Construction, 2007 Edition - Electronic Format, is included, following this page, as an integral part of the Bid documents.

END OF SECTION 007000

© THE ROBINSON GREEN BERETTA CORPORATION – 6060-9007

DRAFT

AIA® Document A201™ – 2007

General Conditions of the Contract for Construction

for the following PROJECT:
(Name and location or address)
«RIPTA R-Line Stations
« »

THE OWNER:
(Name, legal status and address)
« »« »
« »

THE ARCHITECT:
(Name, legal status and address)
« »« »
« »

TABLE OF ARTICLES

1 GENERAL PROVISIONS

2 OWNER

3 CONTRACTOR

4 ARCHITECT

5 SUBCONTRACTORS

6 CONSTRUCTION BY OWNER OR BY SEPARATE CONTRACTORS

7 CHANGES IN THE WORK

8 TIME

9 PAYMENTS AND COMPLETION

10 PROTECTION OF PERSONS AND PROPERTY

11 INSURANCE AND BONDS

12 UNCOVERING AND CORRECTION OF WORK

13 MISCELLANEOUS PROVISIONS

14 TERMINATION OR SUSPENSION OF THE CONTRACT

15 CLAIMS AND DISPUTES

ADDITIONS AND DELETIONS: The author of this document has added information needed for its completion. The author may also have revised the text of the original AIA standard form. An *Additions and Deletions Report* that notes added information as well as revisions to the standard form text is available from the author and should be reviewed.

This document has important legal consequences. Consultation with an attorney is encouraged with respect to its completion or modification.

ELECTRONIC COPYING of any portion of this AIA® Document to another electronic file is prohibited and constitutes a violation of copyright laws as set forth in the footer of this document.

AIA Document A201™ – 2007. Copyright © 1911, 1915, 1918, 1925, 1937, 1951, 1958, 1961, 1963, 1966, 1970, 1976, 1987, 1997 and 2007 by The American Institute of Architects. **All rights reserved. WARNING: This AIA® Document is protected by U.S. Copyright Law and International Treaties. Unauthorized reproduction or distribution of this AIA® Document, or any portion of it, may result in severe civil and criminal penalties, and will be prosecuted to the maximum extent possible under the law.** This draft was produced by AIA software at 12:18:39 on 08/09/2013 under Order No.4849340381_1 which expires on 02/11/2014, and is not for resale.
User Notes: (726487366)

INDEX
(Topics and numbers in bold are section headings.)

Acceptance of Nonconforming Work
9.6.6, 9.9.3, **12.3**
Acceptance of Work
9.6.6, 9.8.2, 9.9.3, 9.10.1, 9.10.3, 12.3
Access to Work
3.16, 6.2.1, 12.1
Accident Prevention
10
Acts and Omissions
3.2, 3.3.2, 3.12.8, 3.18, 4.2.3, 8.3.1, 9.5.1, 10.2.5, 10.2.8, 13.4.2, 13.7, 14.1, 15.2
Addenda
1.1.1, 3.11.1
Additional Costs, Claims for
3.7.4, 3.7.5, 6.1.1, 7.3.7.5, 10.3, 15.1.4
Additional Inspections and Testing
9.4.2, 9.8.3, 12.2.1, **13.5**
Additional Insured
11.1.4
Additional Time, Claims for
3.2.4, 3.7.4, 3.7.5, 3.10.2, 8.3.2, **15.1.5**
Administration of the Contract
3.1.3, **4.2**, 9.4, 9.5
Advertisement or Invitation to Bid
1.1.1
Aesthetic Effect
4.2.13
Allowances
3.8, 7.3.8
All-risk Insurance
11.3.1, 11.3.1.1
Applications for Payment
4.2.5, 7.3.9, 9.2, **9.3**, 9.4, 9.5.1, 9.6.3, 9.7, 9.10, 11.1.3
Approvals
2.1.1, 2.2.2, 2.4, 3.1.3, 3.10.2, 3.12.8, 3.12.9, 3.12.10, 4.2.7, 9.3.2, 13.5.1
Arbitration
8.3.1, 11.3.10, 13.1.1, 15.3.2, **15.4**
ARCHITECT
4
Architect, Definition of
4.1.1
Architect, Extent of Authority
2.4.1, 3.12.7, 4.1, 4.2, 5.2, 6.3, 7.1.2, 7.3.7, 7.4, 9.2, 9.3.1, 9.4, 9.5, 9.6.3, 9.8, 9.10.1, 9.10.3, 12.1, 12.2.1, 13.5.1, 13.5.2, 14.2.2, 14.2.4, 15.1.3, 15.2.1
Architect, Limitations of Authority and Responsibility
2.1.1, 3.12.4, 3.12.8, 3.12.10, 4.1.2, 4.2.1, 4.2.2, 4.2.3, 4.2.6, 4.2.7, 4.2.10, 4.2.12, 4.2.13, 5.2.1, 7.4, 9.4.2, 9.5.3, 9.6.4, 15.1.3, 15.2
Architect's Additional Services and Expenses
2.4.1, 11.3.1.1, 12.2.1, 13.5.2, 13.5.3, 14.2.4
Architect's Administration of the Contract
3.1.3, 4.2, 3.7.4, 15.2, 9.4.1, 9.5
Architect's Approvals
2.4.1, 3.1.3, 3.5, 3.10.2, 4.2.7
Architect's Authority to Reject Work
3.5, 4.2.6, 12.1.2, 12.2.1
Architect's Copyright
1.1.7, 1.5
Architect's Decisions
3.7.4, 4.2.6, 4.2.7, 4.2.11, 4.2.12, 4.2.13, 4.2.14, 6.3, 7.3.7, 7.3.9, 8.1.3, 8.3.1, 9.2, 9.4.1, 9.5, 9.8.4, 9.9.1, 13.5.2, 15.2, 15.3
Architect's Inspections
3.7.4, 4.2.2, 4.2.9, 9.4.2, 9.8.3, 9.9.2, 9.10.1, 13.5
Architect's Instructions
3.2.4, 3.3.1, 4.2.6, 4.2.7, 13.5.2
Architect's Interpretations
4.2.11, 4.2.12
Architect's Project Representative
4.2.10
Architect's Relationship with Contractor
1.1.2, 1.5, 3.1.3, 3.2.2, 3.2.3, 3.2.4, 3.3.1, 3.4.2, 3.5, 3.7.4, 3.7.5, 3.9.2, 3.9.3, 3.10, 3.11, 3.12, 3.16, 3.18, 4.1.2, 4.1.3, 4.2, 5.2, 6.2.2, 7, 8.3.1, 9.2, 9.3, 9.4, 9.5, 9.7, 9.8, 9.9, 10.2.6, 10.3, 11.3.7, 12, 13.4.2, 13.5, 15.2
Architect's Relationship with Subcontractors
1.1.2, 4.2.3, 4.2.4, 4.2.6, 9.6.3, 9.6.4, 11.3.7
Architect's Representations
9.4.2, 9.5.1, 9.10.1
Architect's Site Visits
3.7.4, 4.2.2, 4.2.9, 9.4.2, 9.5.1, 9.9.2, 9.10.1, 13.5
Asbestos
10.3.1
Attorneys' Fees
3.18.1, 9.10.2, 10.3.3
Award of Separate Contracts
6.1.1, 6.1.2
Award of Subcontracts and Other Contracts for Portions of the Work
5.2
Basic Definitions
1.1
Bidding Requirements
1.1.1, 5.2.1, 11.4.1
Binding Dispute Resolution
9.7, 11.3.9, 11.3.10, 13.1.1, 15.2.5, 15.2.6.1, 15.3.1, 15.3.2, 15.4.1
Boiler and Machinery Insurance
11.3.2
Bonds, Lien
7.3.7.4, 9.10.2, 9.10.3
Bonds, Performance, and Payment
7.3.7.4, 9.6.7, 9.10.3, 11.3.9, **11.4**

AIA Document A201™ – 2007. Copyright © 1911, 1915, 1918, 1925, 1937, 1951, 1958, 1961, 1963, 1966, 1970, 1976, 1987, 1997 and 2007 by The American Institute of Architects. **All rights reserved.** **WARNING: This AIA® Document is protected by U.S. Copyright Law and International Treaties. Unauthorized reproduction or distribution of this AIA® Document, or any portion of it, may result in severe civil and criminal penalties, and will be prosecuted to the maximum extent possible under the law.** This draft was produced by AIA software at 12:18:39 on 08/09/2013 under Order No.4849340381_1 which expires on 02/11/2014, and is not for resale.
User Notes: (726487366)

Building Permit
3.7.1
Capitalization
1.3
Certificate of Substantial Completion
9.8.3, 9.8.4, 9.8.5
Certificates for Payment
4.2.1, 4.2.5, 4.2.9, 9.3.3, **9.4**, 9.5, 9.6.1, 9.6.6, 9.7, 9.10.1, 9.10.3, 14.1.1.3, 14.2.4, 15.1.3
Certificates of Inspection, Testing or Approval
13.5.4
Certificates of Insurance
9.10.2, 11.1.3
Change Orders
1.1.1, 2.4.1, 3.4.2, 3.7.4, 3.8.2.3, 3.11.1, 3.12.8, 4.2.8, 5.2.3, 7.1.2, 7.1.3, **7.2**, 7.3.2, 7.3.6, 7.3.9, 7.3.10, 8.3.1, 9.3.1.1, 9.10.3, 10.3.2, 11.3.1.2, 11.3.4, 11.3.9, 12.1.2, 15.1.3
Change Orders, Definition of
7.2.1
CHANGES IN THE WORK
2.2.1, 3.11, 4.2.8, **7**, 7.2.1, 7.3.1, 7.4, 8.3.1, 9.3.1.1, 11.3.9
Claims, Definition of
15.1.1
CLAIMS AND DISPUTES
3.2.4, 6.1.1, 6.3, 7.3.9, 9.3.3, 9.10.4, 10.3.3, **15**, 15.4
Claims and Timely Assertion of Claims
15.4.1
Claims for Additional Cost
3.2.4, 3.7.4, 6.1.1, 7.3.9, 10.3.2, **15.1.4**
Claims for Additional Time
3.2.4, 3.7.46.1.1, 8.3.2, 10.3.2, **15.1.5**
Concealed or Unknown Conditions, Claims for
3.7.4
Claims for Damages
3.2.4, 3.18, 6.1.1, 8.3.3, 9.5.1, 9.6.7, 10.3.3, 11.1.1, 11.3.5, 11.3.7, 14.1.3, 14.2.4, 15.1.6
Claims Subject to Arbitration
15.3.1, 15.4.1
Cleaning Up
3.15, 6.3
Commencement of the Work, Conditions Relating to
2.2.1, 3.2.2, 3.4.1, 3.7.1, 3.10.1, 3.12.6, 5.2.1, 5.2.3, 6.2.2, 8.1.2, 8.2.2, 8.3.1, 11.1, 11.3.1, 11.3.6, 11.4.1, 15.1.4
Commencement of the Work, Definition of
8.1.2
Communications Facilitating Contract Administration
3.9.1, **4.2.4**
Completion, Conditions Relating to
3.4.1, 3.11, 3.15, 4.2.2, 4.2.9, 8.2, 9.4.2, 9.8, 9.9.1, 9.10, 12.2, 13.7, 14.1.2
COMPLETION, PAYMENTS AND
9
Completion, Substantial
4.2.9, 8.1.1, 8.1.3, 8.2.3, 9.4.2, 9.8, 9.9.1, 9.10.3, 12.2, 13.7
Compliance with Laws
1.6.1, 3.2.3, 3.6, 3.7, 3.12.10, 3.13, 4.1.1, 9.6.4, 10.2.2, 11.1, 11.3, 13.1, 13.4, 13.5.1, 13.5.2, 13.6, 14.1.1, 14.2.1.3, 15.2.8, 15.4.2, 15.4.3
Concealed or Unknown Conditions
3.7.4, 4.2.8, 8.3.1, 10.3
Conditions of the Contract
1.1.1, 6.1.1, 6.1.4
Consent, Written
3.4.2, 3.7.4, 3.12.8, 3.14.2, 4.1.2, 9.3.2, 9.8.5, 9.9.1, 9.10.2, 9.10.3, 11.3.1, 13.2, 13.4.2, 15.4.4.2
Consolidation or Joinder
15.4.4
CONSTRUCTION BY OWNER OR BY SEPARATE CONTRACTORS
1.1.4, **6**
Construction Change Directive, Definition of
7.3.1
Construction Change Directives
1.1.1, 3.4.2, 3.12.8, 4.2.8, 7.1.1, 7.1.2, 7.1.3, **7.3**, 9.3.1.1
Construction Schedules, Contractor's
3.10, 3.12.1, 3.12.2, 6.1.3, 15.1.5.2
Contingent Assignment of Subcontracts
5.4, 14.2.2.2
Continuing Contract Performance
15.1.3
Contract, Definition of
1.1.2
CONTRACT, TERMINATION OR SUSPENSION OF THE
5.4.1.1, 11.3.9, **14**
Contract Administration
3.1.3, 4, 9.4, 9.5
Contract Award and Execution, Conditions Relating to
3.7.1, 3.10, 5.2, 6.1, 11.1.3, 11.3.6, 11.4.1
Contract Documents, Copies Furnished and Use of
1.5.2, 2.2.5, 5.3
Contract Documents, Definition of
1.1.1
Contract Sum
3.7.4, 3.8, 5.2.3, 7.2, 7.3, 7.4, **9.1**, 9.4.2, 9.5.1.4, 9.6.7, 9.7, 10.3.2, 11.3.1, 14.2.4, 14.3.2, 15.1.4, 15.2.5
Contract Sum, Definition of
9.1
Contract Time
3.7.4, 3.7.5, 3.10.2, 5.2.3, 7.2.1.3, 7.3.1, 7.3.5, 7.4, 8.1.1, 8.2.1, 8.3.1, 9.5.1, 9.7, 10.3.2, 12.1.1, 14.3.2, 15.1.5.1, 15.2.5
Contract Time, Definition of
8.1.1

AIA Document A201™ – 2007. Copyright © 1911, 1915, 1918, 1925, 1937, 1951, 1958, 1961, 1963, 1966, 1970, 1976, 1987, 1997 and 2007 by The American Institute of Architects. **All rights reserved. WARNING: This AIA® Document is protected by U.S. Copyright Law and International Treaties. Unauthorized reproduction or distribution of this AIA® Document, or any portion of it, may result in severe civil and criminal penalties, and will be prosecuted to the maximum extent possible under the law.** This draft was produced by AIA software at 12:18:39 on 08/09/2013 under Order No.4849340381_1 which expires on 02/11/2014, and is not for resale.
User Notes: (726487366)

CONTRACTOR
3
Contractor, Definition of
3.1, 6.1.2
Contractor's Construction Schedules
3.10, 3.12.1, 3.12.2, 6.1.3, 15.1.5.2
Contractor's Employees
3.3.2, 3.4.3, 3.8.1, 3.9, 3.18.2, 4.2.3, 4.2.6, 10.2, 10.3, 11.1.1, 11.3.7, 14.1, 14.2.1.1
Contractor's Liability Insurance
11.1
Contractor's Relationship with Separate Contractors and Owner's Forces
3.12.5, 3.14.2, 4.2.4, 6, 11.3.7, 12.1.2, 12.2.4
Contractor's Relationship with Subcontractors
1.2.2, 3.3.2, 3.18.1, 3.18.2, 5, 9.6.2, 9.6.7, 9.10.2, 11.3.1.2, 11.3.7, 11.3.8
Contractor's Relationship with the Architect
1.1.2, 1.5, 3.1.3, 3.2.2, 3.2.3, 3.2.4, 3.3.1, 3.4.2, 3.5, 3.7.4, 3.10, 3.11, 3.12, 3.16, 3.18, 4.1.3, 4.2, 5.2, 6.2.2, 7, 8.3.1, 9.2, 9.3, 9.4, 9.5, 9.7, 9.8, 9.9, 10.2.6, 10.3, 11.3.7, 12, 13.5, 15.1.2, 15.2.1
Contractor's Representations
3.2.1, 3.2.2, 3.5, 3.12.6, 6.2.2, 8.2.1, 9.3.3, 9.8.2
Contractor's Responsibility for Those Performing the Work
3.3.2, 3.18, 5.3.1, 6.1.3, 6.2, 9.5.1, 10.2.8
Contractor's Review of Contract Documents
3.2
Contractor's Right to Stop the Work
9.7
Contractor's Right to Terminate the Contract
14.1, 15.1.6
Contractor's Submittals
3.10, 3.11, 3.12.4, 4.2.7, 5.2.1, 5.2.3, 9.2, 9.3, 9.8.2, 9.8.3, 9.9.1, 9.10.2, 9.10.3, 11.1.3, 11.4.2
Contractor's Superintendent
3.9, 10.2.6
Contractor's Supervision and Construction Procedures
1.2.2, 3.3, 3.4, 3.12.10, 4.2.2, 4.2.7, 6.1.3, 6.2.4, 7.1.3, 7.3.5, 7.3.7, 8.2, 10, 12, 14, 15.1.3
Contractual Liability Insurance
11.1.1.8, 11.2
Coordination and Correlation
1.2, 3.2.1, 3.3.1, 3.10, 3.12.6, 6.1.3, 6.2.1
Copies Furnished of Drawings and Specifications
1.5, 2.2.5, 3.11
Copyrights
1.5, **3.17**
Correction of Work
2.3, 2.4, 3.7.3, 9.4.2, 9.8.2, 9.8.3, 9.9.1, 12.1.2, **12.2**
Correlation and Intent of the Contract Documents
1.2
Cost, Definition of
7.3.7
Costs
2.4.1, 3.2.4, 3.7.3, 3.8.2, 3.15.2, 5.4.2, 6.1.1, 6.2.3, 7.3.3.3, 7.3.7, 7.3.8, 7.3.9, 9.10.2, 10.3.2, 10.3.6, 11.3, 12.1.2, 12.2.1, 12.2.4, 13.5, 14
Cutting and Patching
3.14, 6.2.5
Damage to Construction of Owner or Separate Contractors
3.14.2, 6.2.4, 10.2.1.2, 10.2.5, 10.4, 11.1.1, 11.3, 12.2.4
Damage to the Work
3.14.2, 9.9.1, 10.2.1.2, 10.2.5, 10.4.1, 11.3.1, 12.2.4
Damages, Claims for
3.2.4, 3.18, 6.1.1, 8.3.3, 9.5.1, 9.6.7, 10.3.3, 11.1.1, 11.3.5, 11.3.7, 14.1.3, 14.2.4, 15.1.6
Damages for Delay
6.1.1, 8.3.3, 9.5.1.6, 9.7, 10.3.2
Date of Commencement of the Work, Definition of
8.1.2
Date of Substantial Completion, Definition of
8.1.3
Day, Definition of
8.1.4
Decisions of the Architect
3.7.4, 4.2.6, 4.2.7, 4.2.11, 4.2.12, 4.2.13, 15.2, 6.3, 7.3.7, 7.3.9, 8.1.3, 8.3.1, 9.2, 9.4, 9.5.1, 9.8.4, 9.9.1, 13.5.2, 14.2.2, 14.2.4, 15.1, 15.2
Decisions to Withhold Certification
9.4.1, **9.5**, 9.7, 14.1.1.3
Defective or Nonconforming Work, Acceptance, Rejection and Correction of
2.3.1, 2.4.1, 3.5, 4.2.6, 6.2.5, 9.5.1, 9.5.2, 9.6.6, 9.8.2, 9.9.3, 9.10.4, 12.2.1
Definitions
1.1, 2.1.1, 3.1.1, 3.5, 3.12.1, 3.12.2, 3.12.3, 4.1.1, 15.1.1, 5.1, 6.1.2, 7.2.1, 7.3.1, 8.1, 9.1, 9.8.1
Delays and Extensions of Time
3.2, 3.7.4, 5.2.3, 7.2.1, 7.3.1, 7.4, **8.3**, 9.5.1, 9.7, 10.3.2, 10.4.1, 14.3.2, 15.1.5, 15.2.5
Disputes
6.3, 7.3.9, 15.1, 15.2
Documents and Samples at the Site
3.11
Drawings, Definition of
1.1.5
Drawings and Specifications, Use and Ownership of
3.11
Effective Date of Insurance
8.2.2, 11.1.2
Emergencies
10.4, 14.1.1.2, 15.1.4
Employees, Contractor's
3.3.2, 3.4.3, 3.8.1, 3.9, 3.18.2, 4.2.3, 4.2.6, 10.2, 10.3.3, 11.1.1, 11.3.7, 14.1, 14.2.1.1

AIA Document A201™ – 2007. Copyright © 1911, 1915, 1918, 1925, 1937, 1951, 1958, 1961, 1963, 1966, 1970, 1976, 1987, 1997 and 2007 by The American Institute of Architects. **All rights reserved.** **WARNING: This AIA® Document is protected by U.S. Copyright Law and International Treaties. Unauthorized reproduction or distribution of this AIA® Document, or any portion of it, may result in severe civil and criminal penalties, and will be prosecuted to the maximum extent possible under the law.** This draft was produced by AIA software at 12:18:39 on 08/09/2013 under Order No.4849340381_1 which expires on 02/11/2014, and is not for resale.
User Notes: (726487366)

Equipment, Labor, Materials or
1.1.3, 1.1.6, 3.4, 3.5, 3.8.2, 3.8.3, 3.12, 3.13.1, 3.15.1, 4.2.6, 4.2.7, 5.2.1, 6.2.1, 7.3.7, 9.3.2, 9.3.3, 9.5.1.3, 9.10.2, 10.2.1, 10.2.4, 14.2.1.1, 14.2.1.2
Execution and Progress of the Work
1.1.3, 1.2.1, 1.2.2, 2.2.3, 2.2.5, 3.1, 3.3.1, 3.4.1, 3.5, 3.7.1, 3.10.1, 3.12, 3.14, 4.2, 6.2.2, 7.1.3, 7.3.5, 8.2, 9.5.1, 9.9.1, 10.2, 10.3, 12.2, 14.2, 14.3.1, 15.1.3
Extensions of Time
3.2.4, 3.7.4, 5.2.3, 7.2.1, 7.3, 7.4, 9.5.1, 9.7, 10.3.2, 10.4.1, 14.3, 15.1.5, 15.2.5
Failure of Payment
9.5.1.3, **9.7**, 9.10.2, 13.6, 14.1.1.3, 14.2.1.2
Faulty Work
(See Defective or Nonconforming Work)
Final Completion and Final Payment
4.2.1, 4.2.9, 9.8.2, **9.10**, 11.1.2, 11.1.3, 11.3.1, 11.3.5, 12.3.1, 14.2.4, 14.4.3
Financial Arrangements, Owner's
2.2.1, 13.2.2, 14.1.1.4
Fire and Extended Coverage Insurance
11.3.1.1
GENERAL PROVISIONS
1
Governing Law
13.1
Guarantees (See Warranty)
Hazardous Materials
10.2.4, **10.3**
Identification of Subcontractors and Suppliers
5.2.1
Indemnification
3.17, **3.18**, 9.10.2, 10.3.3, 10.3.5, 10.3.6, 11.3.1.2, 11.3.7
Information and Services Required of the Owner
2.1.2, **2.2**, 3.2.2, 3.12.4, 3.12.10, 6.1.3, 6.1.4, 6.2.5, 9.6.1, 9.6.4, 9.9.2, 9.10.3, 10.3.3, 11.2, 11.4, 13.5.1, 13.5.2, 14.1.1.4, 14.1.4, 15.1.3
Initial Decision
15.2
Initial Decision Maker, Definition of
1.1.8
Initial Decision Maker, Decisions
14.2.2, 14.2.4, 15.2.1, 15.2.2, 15.2.3, 15.2.4, 15.2.5
Initial Decision Maker, Extent of Authority
14.2.2, 14.2.4, 15.1.3, 15.2.1, 15.2.2, 15.2.3, 15.2.4, 15.2.5
Injury or Damage to Person or Property
10.2.8, 10.4.1
Inspections
3.1.3, 3.3.3, 3.7.1, 4.2.2, 4.2.6, 4.2.9, 9.4.2, 9.8.3, 9.9.2, 9.10.1, 12.2.1, 13.5
Instructions to Bidders
1.1.1
Instructions to the Contractor
3.2.4, 3.3.1, 3.8.1, 5.2.1, 7, 8.2.2, 12, 13.5.2
Instruments of Service, Definition of
1.1.7
Insurance
3.18.1, 6.1.1, 7.3.7, 9.3.2, 9.8.4, 9.9.1, 9.10.2, **11**
Insurance, Boiler and Machinery
11.3.2
Insurance, Contractor's Liability
11.1
Insurance, Effective Date of
8.2.2, 11.1.2
Insurance, Loss of Use
11.3.3
Insurance, Owner's Liability
11.2
Insurance, Property
10.2.5, **11.3**
Insurance, Stored Materials
9.3.2
INSURANCE AND BONDS
11
Insurance Companies, Consent to Partial Occupancy
9.9.1
Intent of the Contract Documents
1.2.1, 4.2.7, 4.2.12, 4.2.13, 7.4
Interest
13.6
Interpretation
1.2.3, **1.4**, 4.1.1, 5.1, 6.1.2, 15.1.1
Interpretations, Written
4.2.11, 4.2.12, 15.1.4
Judgment on Final Award
15.4.2
Labor and Materials, Equipment
1.1.3, 1.1.6, **3.4**, 3.5, 3.8.2, 3.8.3, 3.12, 3.13, 3.15.1, 4.2.6, 4.2.7, 5.2.1, 6.2.1, 7.3.7, 9.3.2, 9.3.3, 9.5.1.3, 9.10.2, 10.2.1, 10.2.4, 14.2.1.1, 14.2.1.2
Labor Disputes
8.3.1
Laws and Regulations
1.5, 3.2.3, 3.6, 3.7, 3.12.10, 3.13.1, 4.1.1, 9.6.4, 9.9.1, 10.2.2, 11.1.1, 11.3, 13.1.1, 13.4, 13.5.1, 13.5.2, 13.6.1, 14, 15.2.8, 15.4
Liens
2.1.2, 9.3.3, 9.10.2, 9.10.4, 15.2.8
Limitations, Statutes of
12.2.5, 13.7, 15.4.1.1
Limitations of Liability
2.3.1, 3.2.2, 3.5, 3.12.10, 3.17, 3.18.1, 4.2.6, 4.2.7, 4.2.12, 6.2.2, 9.4.2, 9.6.4, 9.6.7, 10.2.5, 10.3.3, 11.1.2, 11.2, 11.3.7, 12.2.5, 13.4.2
Limitations of Time
2.1.2, 2.2, 2.4, 3.2.2, 3.10, 3.11, 3.12.5, 3.15.1, 4.2.7, 5.2, 5.3.1, 5.4.1, 6.2.4, 7.3, 7.4, 8.2, 9.2, 9.3.1, 9.3.3, 9.4.1, 9.5, 9.6, 9.7, 9.8, 9.9, 9.10, 11.1.3, 11.3.1.5, 11.3.6, 11.3.10, 12.2, 13.5, 13.7, 14, 15
Loss of Use Insurance
11.3.3

AIA Document A201™ – 2007. Copyright © 1911, 1915, 1918, 1925, 1937, 1951, 1958, 1961, 1963, 1966, 1970, 1976, 1987, 1997 and 2007 by The American Institute of Architects. **All rights reserved.** **WARNING: This AIA® Document is protected by U.S. Copyright Law and International Treaties. Unauthorized reproduction or distribution of this AIA® Document, or any portion of it, may result in severe civil and criminal penalties, and will be prosecuted to the maximum extent possible under the law.** This draft was produced by AIA software at 12:18:39 on 08/09/2013 under Order No.4849340381_1 which expires on 02/11/2014, and is not for resale.
User Notes: (726487366)

Material Suppliers
1.5, 3.12.1, 4.2.4, 4.2.6, 5.2.1, 9.3, 9.4.2, 9.6, 9.10.5
Materials, Hazardous
10.2.4, **10.3**
Materials, Labor, Equipment and
1.1.3, 1.1.6, 1.5.1, 3.4.1, 3.5, 3.8.2, 3.8.3, 3.12, 3.13.1, 3.15.1, 4.2.6, 4.2.7, 5.2.1, 6.2.1, 7.3.7, 9.3.2, 9.3.3, 9.5.1.3, 9.10.2, 10.2.1.2, 10.2.4, 14.2.1.1, 14.2.1.2
Means, Methods, Techniques, Sequences and Procedures of Construction
3.3.1, 3.12.10, 4.2.2, 4.2.7, 9.4.2
Mechanic's Lien
2.1.2, 15.2.8
Mediation
8.3.1, 10.3.5, 10.3.6, 15.2.1, 15.2.5, 15.2.6, **15.3**, 15.4.1
Minor Changes in the Work
1.1.1, 3.12.8, 4.2.8, 7.1, **7.4**
MISCELLANEOUS PROVISIONS
13
Modifications, Definition of
1.1.1
Modifications to the Contract
1.1.1, 1.1.2, 3.11, 4.1.2, 4.2.1, 5.2.3, 7, 8.3.1, 9.7, 10.3.2, 11.3.1
Mutual Responsibility
6.2
Nonconforming Work, Acceptance of
9.6.6, 9.9.3, **12.3**
Nonconforming Work, Rejection and Correction of
2.3.1, 2.4.1, 3.5, 4.2.6, 6.2.4, 9.5.1, 9.8.2, 9.9.3, 9.10.4, 12.2.1
Notice
2.2.1, 2.3.1, 2.4.1, 3.2.4, 3.3.1, 3.7.2, 3.12.9, 5.2.1, 9.7, 9.10, 10.2.2, 11.1.3, 12.2.2.1, 13.3, 13.5.1, 13.5.2, 14.1, 14.2, 15.2.8, 15.4.1
Notice, Written
2.3.1, 2.4.1, 3.3.1, 3.9.2, 3.12.9, 3.12.10, 5.2.1, 9.7, 9.10, 10.2.2, 10.3, 11.1.3, 11.3.6, 12.2.2.1, **13.3**, 14, 15.2.8, 15.4.1
Notice of Claims
3.7.4, 10.2.8, **15.1.2**, 15.4
Notice of Testing and Inspections
13.5.1, 13.5.2
Observations, Contractor's
3.2, 3.7.4
Occupancy
2.2.2, 9.6.6, 9.8, 11.3.1.5
Orders, Written
1.1.1, 2.3, 3.9.2, 7, 8.2.2, 11.3.9, 12.1, 12.2.2.1, 13.5.2, 14.3.1
OWNER
2
Owner, Definition of
2.1.1
Owner, Information and Services Required of the
2.1.2, **2.2**, 3.2.2, 3.12.10, 6.1.3, 6.1.4, 6.2.5, 9.3.2, 9.6.1, 9.6.4, 9.9.2, 9.10.3, 10.3.3, 11.2, 11.3, 13.5.1, 13.5.2, 14.1.1.4, 14.1.4, 15.1.3
Owner's Authority
1.5, 2.1.1, 2.3.1, 2.4.1, 3.4.2, 3.8.1, 3.12.10, 3.14.2, 4.1.2, 4.1.3, 4.2.4, 4.2.9, 5.2.1, 5.2.4, 5.4.1, 6.1, 6.3, 7.2.1, 7.3.1, 8.2.2, 8.3.1, 9.3.1, 9.3.2, 9.5.1, 9.6.4, 9.9.1, 9.10.2, 10.3.2, 11.1.3, 11.3.3, 11.3.10, 12.2.2, 12.3.1, 13.2.2, 14.3, 14.4, 15.2.7
Owner's Financial Capability
2.2.1, 13.2.2, 14.1.1.4
Owner's Liability Insurance
11.2
Owner's Relationship with Subcontractors
1.1.2, 5.2, 5.3, 5.4, 9.6.4, 9.10.2, 14.2.2
Owner's Right to Carry Out the Work
2.4, 14.2.2
Owner's Right to Clean Up
6.3
Owner's Right to Perform Construction and to Award Separate Contracts
6.1
Owner's Right to Stop the Work
2.3
Owner's Right to Suspend the Work
14.3
Owner's Right to Terminate the Contract
14.2
Ownership and Use of Drawings, Specifications and Other Instruments of Service
1.1.1, 1.1.6, 1.1.7, **1.5**, 2.2.5, 3.2.2, 3.11.1, 3.17, 4.2.12, 5.3.1
Partial Occupancy or Use
9.6.6, **9.9**, 11.3.1.5
Patching, Cutting and
3.14, 6.2.5
Patents
3.17
Payment, Applications for
4.2.5, 7.3.9, 9.2, **9.3**, 9.4, 9.5, 9.6.3, 9.7, 9.8.5, 9.10.1, 14.2.3, 14.2.4, 14.4.3
Payment, Certificates for
4.2.5, 4.2.9, 9.3.3, **9.4**, 9.5, 9.6.1, 9.6.6, 9.7, 9.10.1, 9.10.3, 13.7, 14.1.1.3, 14.2.4
Payment, Failure of
9.5.1.3, **9.7**, 9.10.2, 13.6, 14.1.1.3, 14.2.1.2
Payment, Final
4.2.1, 4.2.9, 9.8.2, 9.10, 11.1.2, 11.1.3, 11.4.1, 12.3.1, 13.7, 14.2.4, 14.4.3
Payment Bond, Performance Bond and
7.3.7.4, 9.6.7, 9.10.3, **11.4**
Payments, Progress
9.3, **9.6**, 9.8.5, 9.10.3, 13.6, 14.2.3, 15.1.3
PAYMENTS AND COMPLETION
9

AIA Document A201™ – 2007. Copyright © 1911, 1915, 1918, 1925, 1937, 1951, 1958, 1961, 1963, 1966, 1970, 1976, 1987, 1997 and 2007 by The American Institute of Architects. **All rights reserved. WARNING: This AIA® Document is protected by U.S. Copyright Law and International Treaties. Unauthorized reproduction or distribution of this AIA® Document, or any portion of it, may result in severe civil and criminal penalties, and will be prosecuted to the maximum extent possible under the law.** This draft was produced by AIA software at 12:18:39 on 08/09/2013 under Order No.4849340381_1 which expires on 02/11/2014, and is not for resale.
User Notes: (726487366)

Payments to Subcontractors
5.4.2, 9.5.1.3, 9.6.2, 9.6.3, 9.6.4, 9.6.7, 14.2.1.2
PCB
10.3.1
Performance Bond and Payment Bond
7.3.7.4, 9.6.7, 9.10.3, **11.4**
Permits, Fees, Notices and Compliance with Laws
2.2.2, **3.7**, 3.13, 7.3.7.4, 10.2.2
PERSONS AND PROPERTY, PROTECTION OF
10
Polychlorinated Biphenyl
10.3.1
Product Data, Definition of
3.12.2
Product Data and Samples, Shop Drawings
3.11, **3.12**, 4.2.7
Progress and Completion
4.2.2, **8.2**, 9.8, 9.9.1, 14.1.4, 15.1.3
Progress Payments
9.3, **9.6**, 9.8.5, 9.10.3, 13.6, 14.2.3, 15.1.3
Project, Definition of
1.1.4
Project Representatives
4.2.10
Property Insurance
10.2.5, **11.3**
PROTECTION OF PERSONS AND PROPERTY
10
Regulations and Laws
1.5, 3.2.3, 3.6, 3.7, 3.12.10, 3.13, 4.1.1, 9.6.4, 9.9.1, 10.2.2, 11.1, 11.4, 13.1, 13.4, 13.5.1, 13.5.2, 13.6, 14, 15.2.8, 15.4
Rejection of Work
3.5, 4.2.6, 12.2.1
Releases and Waivers of Liens
9.10.2
Representations
3.2.1, 3.5, 3.12.6, 6.2.2, 8.2.1, 9.3.3, 9.4.2, 9.5.1, 9.8.2, 9.10.1
Representatives
2.1.1, 3.1.1, 3.9, 4.1.1, 4.2.1, 4.2.2, 4.2.10, 5.1.1, 5.1.2, 13.2.1
Responsibility for Those Performing the Work
3.3.2, 3.18, 4.2.3, 5.3.1, 6.1.3, 6.2, 6.3, 9.5.1, 10
Retainage
9.3.1, 9.6.2, 9.8.5, 9.9.1, 9.10.2, 9.10.3
Review of Contract Documents and Field Conditions by Contractor
3.2, 3.12.7, 6.1.3
Review of Contractor's Submittals by Owner and Architect
3.10.1, 3.10.2, 3.11, 3.12, 4.2, 5.2, 6.1.3, 9.2, 9.8.2
Review of Shop Drawings, Product Data and Samples by Contractor
3.12
Rights and Remedies
1.1.2, 2.3, 2.4, 3.5, 3.7.4, 3.15.2, 4.2.6, 5.3, 5.4, 6.1, 6.3, 7.3.1, 8.3, 9.5.1, 9.7, 10.2.5, 10.3, 12.2.2, 12.2.4, **13.4**, 14, 15.4
Royalties, Patents and Copyrights
3.17
Rules and Notices for Arbitration
15.4.1
Safety of Persons and Property
10.2, 10.4
Safety Precautions and Programs
3.3.1, 4.2.2, 4.2.7, 5.3.1, **10.1**, 10.2, 10.4
Samples, Definition of
3.12.3
Samples, Shop Drawings, Product Data and
3.11, **3.12**, 4.2.7
Samples at the Site, Documents and
3.11
Schedule of Values
9.2, 9.3.1
Schedules, Construction
3.10, 3.12.1, 3.12.2, 6.1.3, 15.1.5.2
Separate Contracts and Contractors
1.1.4, 3.12.5, 3.14.2, 4.2.4, 4.2.7, 6, 8.3.1, 12.1.2
Shop Drawings, Definition of
3.12.1
Shop Drawings, Product Data and Samples
3.11, **3.12**, 4.2.7
Site, Use of
3.13, 6.1.1, 6.2.1
Site Inspections
3.2.2, 3.3.3, 3.7.1, 3.7.4, 4.2, 9.4.2, 9.10.1, 13.5
Site Visits, Architect's
3.7.4, 4.2.2, 4.2.9, 9.4.2, 9.5.1, 9.9.2, 9.10.1, 13.5
Special Inspections and Testing
4.2.6, 12.2.1, 13.5
Specifications, Definition of
1.1.6
Specifications
1.1.1, **1.1.6**, 1.2.2, 1.5, 3.11, 3.12.10, 3.17, 4.2.14
Statute of Limitations
13.7, 15.4.1.1
Stopping the Work
2.3, 9.7, 10.3, 14.1
Stored Materials
6.2.1, 9.3.2, 10.2.1.2, 10.2.4
Subcontractor, Definition of
5.1.1
SUBCONTRACTORS
5
Subcontractors, Work by
1.2.2, 3.3.2, 3.12.1, 4.2.3, 5.2.3, 5.3, 5.4, 9.3.1.2, 9.6.7
Subcontractual Relations
5.3, 5.4, 9.3.1.2, 9.6, 9.10, 10.2.1, 14.1, 14.2.1

AIA Document A201™ – 2007. Copyright © 1911, 1915, 1918, 1925, 1937, 1951, 1958, 1961, 1963, 1966, 1970, 1976, 1987, 1997 and 2007 by The American Institute of Architects. **All rights reserved. WARNING: This AIA® Document is protected by U.S. Copyright Law and International Treaties. Unauthorized reproduction or distribution of this AIA® Document, or any portion of it, may result in severe civil and criminal penalties, and will be prosecuted to the maximum extent possible under the law.** This draft was produced by AIA software at 12:18:39 on 08/09/2013 under Order No.4849340381_1 which expires on 02/11/2014, and is not for resale.
User Notes: (726487366)

Submittals
3.10, 3.11, 3.12, 4.2.7, 5.2.1, 5.2.3, 7.3.7, 9.2, 9.3, 9.8, 9.9.1, 9.10.2, 9.10.3, 11.1.3
Submittal Schedule
3.10.2, 3.12.5, 4.2.7
Subrogation, Waivers of
6.1.1, **11.3.7**
Substantial Completion
4.2.9, 8.1.1, 8.1.3, 8.2.3, 9.4.2, **9.8**, 9.9.1, 9.10.3, 12.2, 13.7
Substantial Completion, Definition of
9.8.1
Substitution of Subcontractors
5.2.3, 5.2.4
Substitution of Architect
4.1.3
Substitutions of Materials
3.4.2, 3.5, 7.3.8
Sub-subcontractor, Definition of
5.1.2
Subsurface Conditions
3.7.4
Successors and Assigns
13.2
Superintendent
3.9, 10.2.6
Supervision and Construction Procedures
1.2.2, **3.3**, 3.4, 3.12.10, 4.2.2, 4.2.7, 6.1.3, 6.2.4, 7.1.3, 7.3.7, 8.2, 8.3.1, 9.4.2, 10, 12, 14, 15.1.3
Surety
5.4.1.2, 9.8.5, 9.10.2, 9.10.3, 14.2.2, 15.2.7
Surety, Consent of
9.10.2, 9.10.3
Surveys
2.2.3
Suspension by the Owner for Convenience
14.3
Suspension of the Work
5.4.2, 14.3
Suspension or Termination of the Contract
5.4.1.1, 14
Taxes
3.6, 3.8.2.1, 7.3.7.4
Termination by the Contractor
14.1, 15.1.6
Termination by the Owner for Cause
5.4.1.1, **14.2,** 15.1.6
Termination by the Owner for Convenience
14.4
Termination of the Architect
4.1.3
Termination of the Contractor
14.2.2
TERMINATION OR SUSPENSION OF THE CONTRACT
14
Tests and Inspections
3.1.3, 3.3.3, 4.2.2, 4.2.6, 4.2.9, 9.4.2, 9.8.3, 9.9.2, 9.10.1, 10.3.2, 11.4.1.1, 12.2.1, **13.5**
TIME
8
Time, Delays and Extensions of
3.2.4, 3.7.4, 5.2.3, 7.2.1, 7.3.1, 7.4, **8.3**, 9.5.1, 9.7, 10.3.2, 10.4.1, 14.3.2, 15.1.5, 15.2.5
Time Limits
2.1.2, 2.2, 2.4, 3.2.2, 3.10, 3.11, 3.12.5, 3.15.1, 4.2, 5.2, 5.3, 5.4, 6.2.4, 7.3, 7.4, 8.2, 9.2, 9.3.1, 9.3.3, 9.4.1, 9.5, 9.6, 9.7, 9.8, 9.9, 9.10, 11.1.3, 12.2, 13.5, 13.7, 14, 15.1.2, 15.4
Time Limits on Claims
3.7.4, 10.2.8, **13.7**, 15.1.2
Title to Work
9.3.2, 9.3.3
Transmission of Data in Digital Form
1.6
UNCOVERING AND CORRECTION OF WORK
12
Uncovering of Work
12.1
Unforeseen Conditions, Concealed or Unknown
3.7.4, 8.3.1, 10.3
Unit Prices
7.3.3.2, 7.3.4
Use of Documents
1.1.1, 1.5, 2.2.5, 3.12.6, 5.3
Use of Site
3.13, 6.1.1, 6.2.1
Values, Schedule of
9.2, 9.3.1
Waiver of Claims by the Architect
13.4.2
Waiver of Claims by the Contractor
9.10.5, 13.4.2, 15.1.6
Waiver of Claims by the Owner
9.9.3, 9.10.3, 9.10.4, 12.2.2.1, 13.4.2, 14.2.4, 15.1.6
Waiver of Consequential Damages
14.2.4, 15.1.6
Waiver of Liens
9.10.2, 9.10.4
Waivers of Subrogation
6.1.1, **11.3.7**
Warranty
3.5, 4.2.9, 9.3.3, 9.8.4, 9.9.1, 9.10.4, 12.2.2, 13.7
Weather Delays
15.1.5.2
Work, Definition of
1.1.3
Written Consent
1.5.2, 3.4.2, 3.7.4, 3.12.8, 3.14.2, 4.1.2, 9.3.2, 9.8.5, 9.9.1, 9.10.2, 9.10.3, 11.4.1, 13.2, 13.4.2, 15.4.4.2
Written Interpretations
4.2.11, 4.2.12

AIA Document A201™ – 2007. Copyright © 1911, 1915, 1918, 1925, 1937, 1951, 1958, 1961, 1963, 1966, 1970, 1976, 1987, 1997 and 2007 by The American Institute of Architects. **All rights reserved.** **WARNING: This AIA® Document is protected by U.S. Copyright Law and International Treaties. Unauthorized reproduction or distribution of this AIA® Document, or any portion of it, may result in severe civil and criminal penalties, and will be prosecuted to the maximum extent possible under the law.** This draft was produced by AIA software at 12:18:39 on 08/09/2013 under Order No.4849340381_1 which expires on 02/11/2014, and is not for resale.
User Notes: (726487366)

Written Notice
2.3, 2.4, 3.3.1, 3.9, 3.12.9, 3.12.10, 5.2.1, 8.2.2, 9.7, 9.10, 10.2.2, 10.3, 11.1.3, 12.2.2, 12.2.4, **13.3**, 14, 15.4.1

Written Orders
1.1.1, 2.3, 3.9, 7, 8.2.2, 12.1, 12.2, 13.5.2, 14.3.1, 15.1.2

DRAFT

AIA Document A201™ – 2007. Copyright © 1911, 1915, 1918, 1925, 1937, 1951, 1958, 1961, 1963, 1966, 1970, 1976, 1987, 1997 and 2007 by The American Institute of Architects. **All rights reserved. WARNING: This AIA® Document is protected by U.S. Copyright Law and International Treaties. Unauthorized reproduction or distribution of this AIA® Document, or any portion of it, may result in severe civil and criminal penalties, and will be prosecuted to the maximum extent possible under the law.** This draft was produced by AIA software at 12:18:39 on 08/09/2013 under Order No.4849340381_1 which expires on 02/11/2014, and is not for resale.
User Notes: (726487366)

ARTICLE 1 GENERAL PROVISIONS

§ 1.1 BASIC DEFINITIONS

§ 1.1.1 THE CONTRACT DOCUMENTS

The Contract Documents are enumerated in the Agreement between the Owner and Contractor (hereinafter the Agreement) and consist of the Agreement, Conditions of the Contract (General, Supplementary and other Conditions), Drawings, Specifications, Addenda issued prior to execution of the Contract, other documents listed in the Agreement and Modifications issued after execution of the Contract. A Modification is (1) a written amendment to the Contract signed by both parties, (2) a Change Order, (3) a Construction Change Directive or (4) a written order for a minor change in the Work issued by the Architect. Unless specifically enumerated in the Agreement, the Contract Documents do not include the advertisement or invitation to bid, Instructions to Bidders, sample forms, other information furnished by the Owner in anticipation of receiving bids or proposals, the Contractor's bid or proposal, or portions of Addenda relating to bidding requirements.

§ 1.1.2 THE CONTRACT

The Contract Documents form the Contract for Construction. The Contract represents the entire and integrated agreement between the parties hereto and supersedes prior negotiations, representations or agreements, either written or oral. The Contract may be amended or modified only by a Modification. The Contract Documents shall not be construed to create a contractual relationship of any kind (1) between the Contractor and the Architect or the Architect's consultants, (2) between the Owner and a Subcontractor or a Sub-subcontractor, (3) between the Owner and the Architect or the Architect's consultants or (4) between any persons or entities other than the Owner and the Contractor. The Architect shall, however, be entitled to performance and enforcement of obligations under the Contract intended to facilitate performance of the Architect's duties.

§ 1.1.3 THE WORK

The term "Work" means the construction and services required by the Contract Documents, whether completed or partially completed, and includes all other labor, materials, equipment and services provided or to be provided by the Contractor to fulfill the Contractor's obligations. The Work may constitute the whole or a part of the Project.

§ 1.1.4 THE PROJECT

The Project is the total construction of which the Work performed under the Contract Documents may be the whole or a part and which may include construction by the Owner and by separate contractors.

§ 1.1.5 THE DRAWINGS

The Drawings are the graphic and pictorial portions of the Contract Documents showing the design, location and dimensions of the Work, generally including plans, elevations, sections, details, schedules and diagrams.

§ 1.1.6 THE SPECIFICATIONS

The Specifications are that portion of the Contract Documents consisting of the written requirements for materials, equipment, systems, standards and workmanship for the Work, and performance of related services.

§ 1.1.7 INSTRUMENTS OF SERVICE

Instruments of Service are representations, in any medium of expression now known or later developed, of the tangible and intangible creative work performed by the Architect and the Architect's consultants under their respective professional services agreements. Instruments of Service may include, without limitation, studies, surveys, models, sketches, drawings, specifications, and other similar materials.

§ 1.1.8 INITIAL DECISION MAKER

The Initial Decision Maker is the person identified in the Agreement to render initial decisions on Claims in accordance with Section 15.2 and certify termination of the Agreement under Section 14.2.2.

§ 1.2 CORRELATION AND INTENT OF THE CONTRACT DOCUMENTS

§ 1.2.1 The intent of the Contract Documents is to include all items necessary for the proper execution and completion of the Work by the Contractor. The Contract Documents are complementary, and what is required by one shall be as binding as if required by all; performance by the Contractor shall be required only to the extent consistent with the Contract Documents and reasonably inferable from them as being necessary to produce the indicated results.

AIA Document A201™ – 2007. Copyright © 1911, 1915, 1918, 1925, 1937, 1951, 1958, 1961, 1963, 1966, 1970, 1976, 1987, 1997 and 2007 by The American Institute of Architects. **All rights reserved. WARNING: This AIA® Document is protected by U.S. Copyright Law and International Treaties. Unauthorized reproduction or distribution of this AIA® Document, or any portion of it, may result in severe civil and criminal penalties, and will be prosecuted to the maximum extent possible under the law.** This draft was produced by AIA software at 12:18:39 on 08/09/2013 under Order No.4849340381_1 which expires on 02/11/2014, and is not for resale.
User Notes: (726487366)

§ 1.2.2 Organization of the Specifications into divisions, sections and articles, and arrangement of Drawings shall not control the Contractor in dividing the Work among Subcontractors or in establishing the extent of Work to be performed by any trade.

§ 1.2.3 Unless otherwise stated in the Contract Documents, words that have well-known technical or construction industry meanings are used in the Contract Documents in accordance with such recognized meanings.

§ 1.3 CAPITALIZATION

Terms capitalized in these General Conditions include those that are (1) specifically defined, (2) the titles of numbered articles or (3) the titles of other documents published by the American Institute of Architects.

§ 1.4 INTERPRETATION

In the interest of brevity the Contract Documents frequently omit modifying words such as "all" and "any" and articles such as "the" and "an," but the fact that a modifier or an article is absent from one statement and appears in another is not intended to affect the interpretation of either statement.

§ 1.5 OWNERSHIP AND USE OF DRAWINGS, SPECIFICATIONS AND OTHER INSTRUMENTS OF SERVICE

§ 1.5.1 The Architect and the Architect's consultants shall be deemed the authors and owners of their respective Instruments of Service, including the Drawings and Specifications, and will retain all common law, statutory and other reserved rights, including copyrights. The Contractor, Subcontractors, Sub-subcontractors, and material or equipment suppliers shall not own or claim a copyright in the Instruments of Service. Submittal or distribution to meet official regulatory requirements or for other purposes in connection with this Project is not to be construed as publication in derogation of the Architect's or Architect's consultants' reserved rights.

§ 1.5.2 The Contractor, Subcontractors, Sub-subcontractors and material or equipment suppliers are authorized to use and reproduce the Instruments of Service provided to them solely and exclusively for execution of the Work. All copies made under this authorization shall bear the copyright notice, if any, shown on the Instruments of Service. The Contractor, Subcontractors, Sub-subcontractors, and material or equipment suppliers may not use the Instruments of Service on other projects or for additions to this Project outside the scope of the Work without the specific written consent of the Owner, Architect and the Architect's consultants.

§ 1.6 TRANSMISSION OF DATA IN DIGITAL FORM

If the parties intend to transmit Instruments of Service or any other information or documentation in digital form, they shall endeavor to establish necessary protocols governing such transmissions, unless otherwise already provided in the Agreement or the Contract Documents.

ARTICLE 2 OWNER

§ 2.1 GENERAL

§ 2.1.1 The Owner is the person or entity identified as such in the Agreement and is referred to throughout the Contract Documents as if singular in number. The Owner shall designate in writing a representative who shall have express authority to bind the Owner with respect to all matters requiring the Owner's approval or authorization. Except as otherwise provided in Section 4.2.1, the Architect does not have such authority. The term "Owner" means the Owner or the Owner's authorized representative.

§ 2.1.2 The Owner shall furnish to the Contractor within fifteen days after receipt of a written request, information necessary and relevant for the Contractor to evaluate, give notice of or enforce mechanic's lien rights. Such information shall include a correct statement of the record legal title to the property on which the Project is located, usually referred to as the site, and the Owner's interest therein.

§ 2.2 INFORMATION AND SERVICES REQUIRED OF THE OWNER

§ 2.2.1 Prior to commencement of the Work, the Contractor may request in writing that the Owner provide reasonable evidence that the Owner has made financial arrangements to fulfill the Owner's obligations under the Contract. Thereafter, the Contractor may only request such evidence if (1) the Owner fails to make payments to the Contractor as the Contract Documents require; (2) a change in the Work materially changes the Contract Sum; or (3) the Contractor identifies in writing a reasonable concern regarding the Owner's ability to make payment when due. The Owner shall furnish such evidence as a condition precedent to commencement or continuation of the Work or

AIA Document A201™ – 2007. Copyright © 1911, 1915, 1918, 1925, 1937, 1951, 1958, 1961, 1963, 1966, 1970, 1976, 1987, 1997 and 2007 by The American Institute of Architects. **All rights reserved. WARNING: This AIA® Document is protected by U.S. Copyright Law and International Treaties. Unauthorized reproduction or distribution of this AIA® Document, or any portion of it, may result in severe civil and criminal penalties, and will be prosecuted to the maximum extent possible under the law.** This draft was produced by AIA software at 12:18:39 on 08/09/2013 under Order No.4849340381_1 which expires on 02/11/2014, and is not for resale.
User Notes: (726487366)

the portion of the Work affected by a material change. After the Owner furnishes the evidence, the Owner shall not materially vary such financial arrangements without prior notice to the Contractor.

§ 2.2.2 Except for permits and fees that are the responsibility of the Contractor under the Contract Documents, including those required under Section 3.7.1, the Owner shall secure and pay for necessary approvals, easements, assessments and charges required for construction, use or occupancy of permanent structures or for permanent changes in existing facilities.

§ 2.2.3 The Owner shall furnish surveys describing physical characteristics, legal limitations and utility locations for the site of the Project, and a legal description of the site. The Contractor shall be entitled to rely on the accuracy of information furnished by the Owner but shall exercise proper precautions relating to the safe performance of the Work.

§ 2.2.4 The Owner shall furnish information or services required of the Owner by the Contract Documents with reasonable promptness. The Owner shall also furnish any other information or services under the Owner's control and relevant to the Contractor's performance of the Work with reasonable promptness after receiving the Contractor's written request for such information or services.

§ 2.2.5 Unless otherwise provided in the Contract Documents, the Owner shall furnish to the Contractor one copy of the Contract Documents for purposes of making reproductions pursuant to Section 1.5.2.

§ 2.3 OWNER'S RIGHT TO STOP THE WORK

If the Contractor fails to correct Work that is not in accordance with the requirements of the Contract Documents as required by Section 12.2 or repeatedly fails to carry out Work in accordance with the Contract Documents, the Owner may issue a written order to the Contractor to stop the Work, or any portion thereof, until the cause for such order has been eliminated; however, the right of the Owner to stop the Work shall not give rise to a duty on the part of the Owner to exercise this right for the benefit of the Contractor or any other person or entity, except to the extent required by Section 6.1.3.

§ 2.4 OWNER'S RIGHT TO CARRY OUT THE WORK

If the Contractor defaults or neglects to carry out the Work in accordance with the Contract Documents and fails within a ten-day period after receipt of written notice from the Owner to commence and continue correction of such default or neglect with diligence and promptness, the Owner may, without prejudice to other remedies the Owner may have, correct such deficiencies. In such case an appropriate Change Order shall be issued deducting from payments then or thereafter due the Contractor the reasonable cost of correcting such deficiencies, including Owner's expenses and compensation for the Architect's additional services made necessary by such default, neglect or failure. Such action by the Owner and amounts charged to the Contractor are both subject to prior approval of the Architect. If payments then or thereafter due the Contractor are not sufficient to cover such amounts, the Contractor shall pay the difference to the Owner.

ARTICLE 3 CONTRACTOR

§ 3.1 GENERAL

§ 3.1.1 The Contractor is the person or entity identified as such in the Agreement and is referred to throughout the Contract Documents as if singular in number. The Contractor shall be lawfully licensed, if required in the jurisdiction where the Project is located. The Contractor shall designate in writing a representative who shall have express authority to bind the Contractor with respect to all matters under this Contract. The term "Contractor" means the Contractor or the Contractor's authorized representative.

§ 3.1.2 The Contractor shall perform the Work in accordance with the Contract Documents.

§ 3.1.3 The Contractor shall not be relieved of obligations to perform the Work in accordance with the Contract Documents either by activities or duties of the Architect in the Architect's administration of the Contract, or by tests, inspections or approvals required or performed by persons or entities other than the Contractor.

AIA Document A201™ – 2007. Copyright © 1911, 1915, 1918, 1925, 1937, 1951, 1958, 1961, 1963, 1966, 1970, 1976, 1987, 1997 and 2007 by The American Institute of Architects. **All rights reserved. WARNING: This AIA® Document is protected by U.S. Copyright Law and International Treaties. Unauthorized reproduction or distribution of this AIA® Document, or any portion of it, may result in severe civil and criminal penalties, and will be prosecuted to the maximum extent possible under the law.** This draft was produced by AIA software at 12:18:39 on 08/09/2013 under Order No.4849340381_1 which expires on 02/11/2014, and is not for resale.
User Notes: (726487366)

§ 3.2 REVIEW OF CONTRACT DOCUMENTS AND FIELD CONDITIONS BY CONTRACTOR

§ 3.2.1 Execution of the Contract by the Contractor is a representation that the Contractor has visited the site, become generally familiar with local conditions under which the Work is to be performed and correlated personal observations with requirements of the Contract Documents.

§ 3.2.2 Because the Contract Documents are complementary, the Contractor shall, before starting each portion of the Work, carefully study and compare the various Contract Documents relative to that portion of the Work, as well as the information furnished by the Owner pursuant to Section 2.2.3, shall take field measurements of any existing conditions related to that portion of the Work, and shall observe any conditions at the site affecting it. These obligations are for the purpose of facilitating coordination and construction by the Contractor and are not for the purpose of discovering errors, omissions, or inconsistencies in the Contract Documents; however, the Contractor shall promptly report to the Architect any errors, inconsistencies or omissions discovered by or made known to the Contractor as a request for information in such form as the Architect may require. It is recognized that the Contractor's review is made in the Contractor's capacity as a contractor and not as a licensed design professional, unless otherwise specifically provided in the Contract Documents.

§ 3.2.3 The Contractor is not required to ascertain that the Contract Documents are in accordance with applicable laws, statutes, ordinances, codes, rules and regulations, or lawful orders of public authorities, but the Contractor shall promptly report to the Architect any nonconformity discovered by or made known to the Contractor as a request for information in such form as the Architect may require.

§ 3.2.4 If the Contractor believes that additional cost or time is involved because of clarifications or instructions the Architect issues in response to the Contractor's notices or requests for information pursuant to Sections 3.2.2 or 3.2.3, the Contractor shall make Claims as provided in Article 15. If the Contractor fails to perform the obligations of Sections 3.2.2 or 3.2.3, the Contractor shall pay such costs and damages to the Owner as would have been avoided if the Contractor had performed such obligations. If the Contractor performs those obligations, the Contractor shall not be liable to the Owner or Architect for damages resulting from errors, inconsistencies or omissions in the Contract Documents, for differences between field measurements or conditions and the Contract Documents, or for nonconformities of the Contract Documents to applicable laws, statutes, ordinances, codes, rules and regulations, and lawful orders of public authorities.

§ 3.3 SUPERVISION AND CONSTRUCTION PROCEDURES

§ 3.3.1 The Contractor shall supervise and direct the Work, using the Contractor's best skill and attention. The Contractor shall be solely responsible for, and have control over, construction means, methods, techniques, sequences and procedures and for coordinating all portions of the Work under the Contract, unless the Contract Documents give other specific instructions concerning these matters. If the Contract Documents give specific instructions concerning construction means, methods, techniques, sequences or procedures, the Contractor shall evaluate the jobsite safety thereof and, except as stated below, shall be fully and solely responsible for the jobsite safety of such means, methods, techniques, sequences or procedures. If the Contractor determines that such means, methods, techniques, sequences or procedures may not be safe, the Contractor shall give timely written notice to the Owner and Architect and shall not proceed with that portion of the Work without further written instructions from the Architect. If the Contractor is then instructed to proceed with the required means, methods, techniques, sequences or procedures without acceptance of changes proposed by the Contractor, the Owner shall be solely responsible for any loss or damage arising solely from those Owner-required means, methods, techniques, sequences or procedures.

§ 3.3.2 The Contractor shall be responsible to the Owner for acts and omissions of the Contractor's employees, Subcontractors and their agents and employees, and other persons or entities performing portions of the Work for, or on behalf of, the Contractor or any of its Subcontractors.

§ 3.3.3 The Contractor shall be responsible for inspection of portions of Work already performed to determine that such portions are in proper condition to receive subsequent Work.

§ 3.4 LABOR AND MATERIALS

§ 3.4.1 Unless otherwise provided in the Contract Documents, the Contractor shall provide and pay for labor, materials, equipment, tools, construction equipment and machinery, water, heat, utilities, transportation, and other

AIA Document A201™ – 2007. Copyright © 1911, 1915, 1918, 1925, 1937, 1951, 1958, 1961, 1963, 1966, 1970, 1976, 1987, 1997 and 2007 by The American Institute of Architects. **All rights reserved. WARNING: This AIA® Document is protected by U.S. Copyright Law and International Treaties. Unauthorized reproduction or distribution of this AIA® Document, or any portion of it, may result in severe civil and criminal penalties, and will be prosecuted to the maximum extent possible under the law.** This draft was produced by AIA software at 12:18:39 on 08/09/2013 under Order No.4849340381_1 which expires on 02/11/2014, and is not for resale.
User Notes: (726487366)

facilities and services necessary for proper execution and completion of the Work, whether temporary or permanent and whether or not incorporated or to be incorporated in the Work.

§ 3.4.2 Except in the case of minor changes in the Work authorized by the Architect in accordance with Sections 3.12.8 or 7.4, the Contractor may make substitutions only with the consent of the Owner, after evaluation by the Architect and in accordance with a Change Order or Construction Change Directive.

§ 3.4.3 The Contractor shall enforce strict discipline and good order among the Contractor's employees and other persons carrying out the Work. The Contractor shall not permit employment of unfit persons or persons not properly skilled in tasks assigned to them.

§ 3.5 WARRANTY

The Contractor warrants to the Owner and Architect that materials and equipment furnished under the Contract will be of good quality and new unless the Contract Documents require or permit otherwise. The Contractor further warrants that the Work will conform to the requirements of the Contract Documents and will be free from defects, except for those inherent in the quality of the Work the Contract Documents require or permit. Work, materials, or equipment not conforming to these requirements may be considered defective. The Contractor's warranty excludes remedy for damage or defect caused by abuse, alterations to the Work not executed by the Contractor, improper or insufficient maintenance, improper operation, or normal wear and tear and normal usage. If required by the Architect, the Contractor shall furnish satisfactory evidence as to the kind and quality of materials and equipment.

§ 3.6 TAXES

The Contractor shall pay sales, consumer, use and similar taxes for the Work provided by the Contractor that are legally enacted when bids are received or negotiations concluded, whether or not yet effective or merely scheduled to go into effect.

§ 3.7 PERMITS, FEES, NOTICES AND COMPLIANCE WITH LAWS

§ 3.7.1 Unless otherwise provided in the Contract Documents, the Contractor shall secure and pay for the building permit as well as for other permits, fees, licenses, and inspections by government agencies necessary for proper execution and completion of the Work that are customarily secured after execution of the Contract and legally required at the time bids are received or negotiations concluded.

§ 3.7.2 The Contractor shall comply with and give notices required by applicable laws, statutes, ordinances, codes, rules and regulations, and lawful orders of public authorities applicable to performance of the Work.

§ 3.7.3 If the Contractor performs Work knowing it to be contrary to applicable laws, statutes, ordinances, codes, rules and regulations, or lawful orders of public authorities, the Contractor shall assume appropriate responsibility for such Work and shall bear the costs attributable to correction.

§ 3.7.4 Concealed or Unknown Conditions. If the Contractor encounters conditions at the site that are (1) subsurface or otherwise concealed physical conditions that differ materially from those indicated in the Contract Documents or (2) unknown physical conditions of an unusual nature, that differ materially from those ordinarily found to exist and generally recognized as inherent in construction activities of the character provided for in the Contract Documents, the Contractor shall promptly provide notice to the Owner and the Architect before conditions are disturbed and in no event later than 21 days after first observance of the conditions. The Architect will promptly investigate such conditions and, if the Architect determines that they differ materially and cause an increase or decrease in the Contractor's cost of, or time required for, performance of any part of the Work, will recommend an equitable adjustment in the Contract Sum or Contract Time, or both. If the Architect determines that the conditions at the site are not materially different from those indicated in the Contract Documents and that no change in the terms of the Contract is justified, the Architect shall promptly notify the Owner and Contractor in writing, stating the reasons. If either party disputes the Architect's determination or recommendation, that party may proceed as provided in Article 15.

§ 3.7.5 If, in the course of the Work, the Contractor encounters human remains or recognizes the existence of burial markers, archaeological sites or wetlands not indicated in the Contract Documents, the Contractor shall immediately suspend any operations that would affect them and shall notify the Owner and Architect. Upon receipt of such notice, the Owner shall promptly take any action necessary to obtain governmental authorization required to resume

AIA Document A201™ – 2007. Copyright © 1911, 1915, 1918, 1925, 1937, 1951, 1958, 1961, 1963, 1966, 1970, 1976, 1987, 1997 and 2007 by The American Institute of Architects. **All rights reserved. WARNING: This AIA® Document is protected by U.S. Copyright Law and International Treaties. Unauthorized reproduction or distribution of this AIA® Document, or any portion of it, may result in severe civil and criminal penalties, and will be prosecuted to the maximum extent possible under the law.** This draft was produced by AIA software at 12:18:39 on 08/09/2013 under Order No.4849340381_1 which expires on 02/11/2014, and is not for resale.
User Notes: (726487366)

the operations. The Contractor shall continue to suspend such operations until otherwise instructed by the Owner but shall continue with all other operations that do not affect those remains or features. Requests for adjustments in the Contract Sum and Contract Time arising from the existence of such remains or features may be made as provided in Article 15.

§ 3.8 ALLOWANCES

§ 3.8.1 The Contractor shall include in the Contract Sum all allowances stated in the Contract Documents. Items covered by allowances shall be supplied for such amounts and by such persons or entities as the Owner may direct, but the Contractor shall not be required to employ persons or entities to whom the Contractor has reasonable objection.

§ 3.8.2 Unless otherwise provided in the Contract Documents,

- **.1** Allowances shall cover the cost to the Contractor of materials and equipment delivered at the site and all required taxes, less applicable trade discounts;
- **.2** Contractor's costs for unloading and handling at the site, labor, installation costs, overhead, profit and other expenses contemplated for stated allowance amounts shall be included in the Contract Sum but not in the allowances; and
- **.3** Whenever costs are more than or less than allowances, the Contract Sum shall be adjusted accordingly by Change Order. The amount of the Change Order shall reflect (1) the difference between actual costs and the allowances under Section 3.8.2.1 and (2) changes in Contractor's costs under Section 3.8.2.2.

§ 3.8.3 Materials and equipment under an allowance shall be selected by the Owner with reasonable promptness.

§ 3.9 SUPERINTENDENT

§ 3.9.1 The Contractor shall employ a competent superintendent and necessary assistants who shall be in attendance at the Project site during performance of the Work. The superintendent shall represent the Contractor, and communications given to the superintendent shall be as binding as if given to the Contractor.

§ 3.9.2 The Contractor, as soon as practicable after award of the Contract, shall furnish in writing to the Owner through the Architect the name and qualifications of a proposed superintendent. The Architect may reply within 14 days to the Contractor in writing stating (1) whether the Owner or the Architect has reasonable objection to the proposed superintendent or (2) that the Architect requires additional time to review. Failure of the Architect to reply within the 14 day period shall constitute notice of no reasonable objection.

§ 3.9.3 The Contractor shall not employ a proposed superintendent to whom the Owner or Architect has made reasonable and timely objection. The Contractor shall not change the superintendent without the Owner's consent, which shall not unreasonably be withheld or delayed.

§ 3.10 CONTRACTOR'S CONSTRUCTION SCHEDULES

§ 3.10.1 The Contractor, promptly after being awarded the Contract, shall prepare and submit for the Owner's and Architect's information a Contractor's construction schedule for the Work. The schedule shall not exceed time limits current under the Contract Documents, shall be revised at appropriate intervals as required by the conditions of the Work and Project, shall be related to the entire Project to the extent required by the Contract Documents, and shall provide for expeditious and practicable execution of the Work.

§ 3.10.2 The Contractor shall prepare a submittal schedule, promptly after being awarded the Contract and thereafter as necessary to maintain a current submittal schedule, and shall submit the schedule(s) for the Architect's approval. The Architect's approval shall not unreasonably be delayed or withheld. The submittal schedule shall (1) be coordinated with the Contractor's construction schedule, and (2) allow the Architect reasonable time to review submittals. If the Contractor fails to submit a submittal schedule, the Contractor shall not be entitled to any increase in Contract Sum or extension of Contract Time based on the time required for review of submittals.

§ 3.10.3 The Contractor shall perform the Work in general accordance with the most recent schedules submitted to the Owner and Architect.

AIA Document A201™ – 2007. Copyright © 1911, 1915, 1918, 1925, 1937, 1951, 1958, 1961, 1963, 1966, 1970, 1976, 1987, 1997 and 2007 by The American Institute of Architects. **All rights reserved. WARNING: This AIA® Document is protected by U.S. Copyright Law and International Treaties. Unauthorized reproduction or distribution of this AIA® Document, or any portion of it, may result in severe civil and criminal penalties, and will be prosecuted to the maximum extent possible under the law.** This draft was produced by AIA software at 12:18:39 on 08/09/2013 under Order No.4849340381_1 which expires on 02/11/2014, and is not for resale.
User Notes: (726487366)

§ 3.11 DOCUMENTS AND SAMPLES AT THE SITE

The Contractor shall maintain at the site for the Owner one copy of the Drawings, Specifications, Addenda, Change Orders and other Modifications, in good order and marked currently to indicate field changes and selections made during construction, and one copy of approved Shop Drawings, Product Data, Samples and similar required submittals. These shall be available to the Architect and shall be delivered to the Architect for submittal to the Owner upon completion of the Work as a record of the Work as constructed.

§ 3.12 SHOP DRAWINGS, PRODUCT DATA AND SAMPLES

§ 3.12.1 Shop Drawings are drawings, diagrams, schedules and other data specially prepared for the Work by the Contractor or a Subcontractor, Sub-subcontractor, manufacturer, supplier or distributor to illustrate some portion of the Work.

§ 3.12.2 Product Data are illustrations, standard schedules, performance charts, instructions, brochures, diagrams and other information furnished by the Contractor to illustrate materials or equipment for some portion of the Work.

§ 3.12.3 Samples are physical examples that illustrate materials, equipment or workmanship and establish standards by which the Work will be judged.

§ 3.12.4 Shop Drawings, Product Data, Samples and similar submittals are not Contract Documents. Their purpose is to demonstrate the way by which the Contractor proposes to conform to the information given and the design concept expressed in the Contract Documents for those portions of the Work for which the Contract Documents require submittals. Review by the Architect is subject to the limitations of Section 4.2.7. Informational submittals upon which the Architect is not expected to take responsive action may be so identified in the Contract Documents. Submittals that are not required by the Contract Documents may be returned by the Architect without action.

§ 3.12.5 The Contractor shall review for compliance with the Contract Documents, approve and submit to the Architect Shop Drawings, Product Data, Samples and similar submittals required by the Contract Documents in accordance with the submittal schedule approved by the Architect or, in the absence of an approved submittal schedule, with reasonable promptness and in such sequence as to cause no delay in the Work or in the activities of the Owner or of separate contractors.

§ 3.12.6 By submitting Shop Drawings, Product Data, Samples and similar submittals, the Contractor represents to the Owner and Architect that the Contractor has (1) reviewed and approved them, (2) determined and verified materials, field measurements and field construction criteria related thereto, or will do so and (3) checked and coordinated the information contained within such submittals with the requirements of the Work and of the Contract Documents.

§ 3.12.7 The Contractor shall perform no portion of the Work for which the Contract Documents require submittal and review of Shop Drawings, Product Data, Samples or similar submittals until the respective submittal has been approved by the Architect.

§ 3.12.8 The Work shall be in accordance with approved submittals except that the Contractor shall not be relieved of responsibility for deviations from requirements of the Contract Documents by the Architect's approval of Shop Drawings, Product Data, Samples or similar submittals unless the Contractor has specifically informed the Architect in writing of such deviation at the time of submittal and (1) the Architect has given written approval to the specific deviation as a minor change in the Work, or (2) a Change Order or Construction Change Directive has been issued authorizing the deviation. The Contractor shall not be relieved of responsibility for errors or omissions in Shop Drawings, Product Data, Samples or similar submittals by the Architect's approval thereof.

§ 3.12.9 The Contractor shall direct specific attention, in writing or on resubmitted Shop Drawings, Product Data, Samples or similar submittals, to revisions other than those requested by the Architect on previous submittals. In the absence of such written notice, the Architect's approval of a resubmission shall not apply to such revisions.

§ 3.12.10 The Contractor shall not be required to provide professional services that constitute the practice of architecture or engineering unless such services are specifically required by the Contract Documents for a portion of the Work or unless the Contractor needs to provide such services in order to carry out the Contractor's responsibilities for construction means, methods, techniques, sequences and procedures. The Contractor shall not be

AIA Document A201™ – 2007. Copyright © 1911, 1915, 1918, 1925, 1937, 1951, 1958, 1961, 1963, 1966, 1970, 1976, 1987, 1997 and 2007 by The American Institute of Architects. **All rights reserved. WARNING: This AIA® Document is protected by U.S. Copyright Law and International Treaties. Unauthorized reproduction or distribution of this AIA® Document, or any portion of it, may result in severe civil and criminal penalties, and will be prosecuted to the maximum extent possible under the law.** This draft was produced by AIA software at 12:18:39 on 08/09/2013 under Order No.4849340381_1 which expires on 02/11/2014, and is not for resale.
User Notes: (726487366)

required to provide professional services in violation of applicable law. If professional design services or certifications by a design professional related to systems, materials or equipment are specifically required of the Contractor by the Contract Documents, the Owner and the Architect will specify all performance and design criteria that such services must satisfy. The Contractor shall cause such services or certifications to be provided by a properly licensed design professional, whose signature and seal shall appear on all drawings, calculations, specifications, certifications, Shop Drawings and other submittals prepared by such professional. Shop Drawings and other submittals related to the Work designed or certified by such professional, if prepared by others, shall bear such professional's written approval when submitted to the Architect. The Owner and the Architect shall be entitled to rely upon the adequacy, accuracy and completeness of the services, certifications and approvals performed or provided by such design professionals, provided the Owner and Architect have specified to the Contractor all performance and design criteria that such services must satisfy. Pursuant to this Section 3.12.10, the Architect will review, approve or take other appropriate action on submittals only for the limited purpose of checking for conformance with information given and the design concept expressed in the Contract Documents. The Contractor shall not be responsible for the adequacy of the performance and design criteria specified in the Contract Documents.

§ 3.13 USE OF SITE

The Contractor shall confine operations at the site to areas permitted by applicable laws, statutes, ordinances, codes, rules and regulations, and lawful orders of public authorities and the Contract Documents and shall not unreasonably encumber the site with materials or equipment.

§ 3.14 CUTTING AND PATCHING

§ 3.14.1 The Contractor shall be responsible for cutting, fitting or patching required to complete the Work or to make its parts fit together properly. All areas requiring cutting, fitting and patching shall be restored to the condition existing prior to the cutting, fitting and patching, unless otherwise required by the Contract Documents.

§ 3.14.2 The Contractor shall not damage or endanger a portion of the Work or fully or partially completed construction of the Owner or separate contractors by cutting, patching or otherwise altering such construction, or by excavation. The Contractor shall not cut or otherwise alter such construction by the Owner or a separate contractor except with written consent of the Owner and of such separate contractor; such consent shall not be unreasonably withheld. The Contractor shall not unreasonably withhold from the Owner or a separate contractor the Contractor's consent to cutting or otherwise altering the Work.

§ 3.15 CLEANING UP

§ 3.15.1 The Contractor shall keep the premises and surrounding area free from accumulation of waste materials or rubbish caused by operations under the Contract. At completion of the Work, the Contractor shall remove waste materials, rubbish, the Contractor's tools, construction equipment, machinery and surplus materials from and about the Project.

§ 3.15.2 If the Contractor fails to clean up as provided in the Contract Documents, the Owner may do so and Owner shall be entitled to reimbursement from the Contractor.

§ 3.16 ACCESS TO WORK

The Contractor shall provide the Owner and Architect access to the Work in preparation and progress wherever located.

§ 3.17 ROYALTIES, PATENTS AND COPYRIGHTS

The Contractor shall pay all royalties and license fees. The Contractor shall defend suits or claims for infringement of copyrights and patent rights and shall hold the Owner and Architect harmless from loss on account thereof, but shall not be responsible for such defense or loss when a particular design, process or product of a particular manufacturer or manufacturers is required by the Contract Documents, or where the copyright violations are contained in Drawings, Specifications or other documents prepared by the Owner or Architect. However, if the Contractor has reason to believe that the required design, process or product is an infringement of a copyright or a patent, the Contractor shall be responsible for such loss unless such information is promptly furnished to the Architect.

AIA Document A201™ – 2007. Copyright © 1911, 1915, 1918, 1925, 1937, 1951, 1958, 1961, 1963, 1966, 1970, 1976, 1987, 1997 and 2007 by The American Institute of Architects. **All rights reserved. WARNING: This AIA® Document is protected by U.S. Copyright Law and International Treaties. Unauthorized reproduction or distribution of this AIA® Document, or any portion of it, may result in severe civil and criminal penalties, and will be prosecuted to the maximum extent possible under the law.** This draft was produced by AIA software at 12:18:39 on 08/09/2013 under Order No.4849340381_1 which expires on 02/11/2014, and is not for resale.
User Notes: (726487366)

§ 3.18 INDEMNIFICATION

§ 3.18.1 To the fullest extent permitted by law the Contractor shall indemnify and hold harmless the Owner, Architect, Architect's consultants, and agents and employees of any of them from and against claims, damages, losses and expenses, including but not limited to attorneys' fees, arising out of or resulting from performance of the Work, provided that such claim, damage, loss or expense is attributable to bodily injury, sickness, disease or death, or to injury to or destruction of tangible property (other than the Work itself), but only to the extent caused by the negligent acts or omissions of the Contractor, a Subcontractor, anyone directly or indirectly employed by them or anyone for whose acts they may be liable, regardless of whether or not such claim, damage, loss or expense is caused in part by a party indemnified hereunder. Such obligation shall not be construed to negate, abridge, or reduce other rights or obligations of indemnity that would otherwise exist as to a party or person described in this Section 3.18.

§ 3.18.2 In claims against any person or entity indemnified under this Section 3.18 by an employee of the Contractor, a Subcontractor, anyone directly or indirectly employed by them or anyone for whose acts they may be liable, the indemnification obligation under Section 3.18.1 shall not be limited by a limitation on amount or type of damages, compensation or benefits payable by or for the Contractor or a Subcontractor under workers' compensation acts, disability benefit acts or other employee benefit acts.

ARTICLE 4 ARCHITECT

§ 4.1 GENERAL

§ 4.1.1 The Owner shall retain an architect lawfully licensed to practice architecture or an entity lawfully practicing architecture in the jurisdiction where the Project is located. That person or entity is identified as the Architect in the Agreement and is referred to throughout the Contract Documents as if singular in number.

§ 4.1.2 Duties, responsibilities and limitations of authority of the Architect as set forth in the Contract Documents shall not be restricted, modified or extended without written consent of the Owner, Contractor and Architect. Consent shall not be unreasonably withheld.

§ 4.1.3 If the employment of the Architect is terminated, the Owner shall employ a successor architect as to whom the Contractor has no reasonable objection and whose status under the Contract Documents shall be that of the Architect.

§ 4.2 ADMINISTRATION OF THE CONTRACT

§ 4.2.1 The Architect will provide administration of the Contract as described in the Contract Documents and will be an Owner's representative during construction until the date the Architect issues the final Certificate for Payment. The Architect will have authority to act on behalf of the Owner only to the extent provided in the Contract Documents.

§ 4.2.2 The Architect will visit the site at intervals appropriate to the stage of construction, or as otherwise agreed with the Owner, to become generally familiar with the progress and quality of the portion of the Work completed, and to determine in general if the Work observed is being performed in a manner indicating that the Work, when fully completed, will be in accordance with the Contract Documents. However, the Architect will not be required to make exhaustive or continuous on-site inspections to check the quality or quantity of the Work. The Architect will not have control over, charge of, or responsibility for, the construction means, methods, techniques, sequences or procedures, or for the safety precautions and programs in connection with the Work, since these are solely the Contractor's rights and responsibilities under the Contract Documents, except as provided in Section 3.3.1.

§ 4.2.3 On the basis of the site visits, the Architect will keep the Owner reasonably informed about the progress and quality of the portion of the Work completed, and report to the Owner (1) known deviations from the Contract Documents and from the most recent construction schedule submitted by the Contractor, and (2) defects and deficiencies observed in the Work. The Architect will not be responsible for the Contractor's failure to perform the Work in accordance with the requirements of the Contract Documents. The Architect will not have control over or charge of and will not be responsible for acts or omissions of the Contractor, Subcontractors, or their agents or employees, or any other persons or entities performing portions of the Work.

AIA Document A201™ – 2007. Copyright © 1911, 1915, 1918, 1925, 1937, 1951, 1958, 1961, 1963, 1966, 1970, 1976, 1987, 1997 and 2007 by The American Institute of Architects. **All rights reserved. WARNING: This AIA® Document is protected by U.S. Copyright Law and International Treaties. Unauthorized reproduction or distribution of this AIA® Document, or any portion of it, may result in severe civil and criminal penalties, and will be prosecuted to the maximum extent possible under the law.** This draft was produced by AIA software at 12:18:39 on 08/09/2013 under Order No.4849340381_1 which expires on 02/11/2014, and is not for resale.
User Notes: (726487366)

§ 4.2.4 COMMUNICATIONS FACILITATING CONTRACT ADMINISTRATION
Except as otherwise provided in the Contract Documents or when direct communications have been specially authorized, the Owner and Contractor shall endeavor to communicate with each other through the Architect about matters arising out of or relating to the Contract. Communications by and with the Architect's consultants shall be through the Architect. Communications by and with Subcontractors and material suppliers shall be through the Contractor. Communications by and with separate contractors shall be through the Owner.

§ 4.2.5 Based on the Architect's evaluations of the Contractor's Applications for Payment, the Architect will review and certify the amounts due the Contractor and will issue Certificates for Payment in such amounts.

§ 4.2.6 The Architect has authority to reject Work that does not conform to the Contract Documents. Whenever the Architect considers it necessary or advisable, the Architect will have authority to require inspection or testing of the Work in accordance with Sections 13.5.2 and 13.5.3, whether or not such Work is fabricated, installed or completed. However, neither this authority of the Architect nor a decision made in good faith either to exercise or not to exercise such authority shall give rise to a duty or responsibility of the Architect to the Contractor, Subcontractors, material and equipment suppliers, their agents or employees, or other persons or entities performing portions of the Work.

§ 4.2.7 The Architect will review and approve, or take other appropriate action upon, the Contractor's submittals such as Shop Drawings, Product Data and Samples, but only for the limited purpose of checking for conformance with information given and the design concept expressed in the Contract Documents. The Architect's action will be taken in accordance with the submittal schedule approved by the Architect or, in the absence of an approved submittal schedule, with reasonable promptness while allowing sufficient time in the Architect's professional judgment to permit adequate review. Review of such submittals is not conducted for the purpose of determining the accuracy and completeness of other details such as dimensions and quantities, or for substantiating instructions for installation or performance of equipment or systems, all of which remain the responsibility of the Contractor as required by the Contract Documents. The Architect's review of the Contractor's submittals shall not relieve the Contractor of the obligations under Sections 3.3, 3.5 and 3.12. The Architect's review shall not constitute approval of safety precautions or, unless otherwise specifically stated by the Architect, of any construction means, methods, techniques, sequences or procedures. The Architect's approval of a specific item shall not indicate approval of an assembly of which the item is a component.

§ 4.2.8 The Architect will prepare Change Orders and Construction Change Directives, and may authorize minor changes in the Work as provided in Section 7.4. The Architect will investigate and make determinations and recommendations regarding concealed and unknown conditions as provided in Section 3.7.4.

§ 4.2.9 The Architect will conduct inspections to determine the date or dates of Substantial Completion and the date of final completion; issue Certificates of Substantial Completion pursuant to Section 9.8; receive and forward to the Owner, for the Owner's review and records, written warranties and related documents required by the Contract and assembled by the Contractor pursuant to Section 9.10; and issue a final Certificate for Payment pursuant to Section 9.10.

§ 4.2.10 If the Owner and Architect agree, the Architect will provide one or more project representatives to assist in carrying out the Architect's responsibilities at the site. The duties, responsibilities and limitations of authority of such project representatives shall be as set forth in an exhibit to be incorporated in the Contract Documents.

§ 4.2.11 The Architect will interpret and decide matters concerning performance under, and requirements of, the Contract Documents on written request of either the Owner or Contractor. The Architect's response to such requests will be made in writing within any time limits agreed upon or otherwise with reasonable promptness.

§ 4.2.12 Interpretations and decisions of the Architect will be consistent with the intent of, and reasonably inferable from, the Contract Documents and will be in writing or in the form of drawings. When making such interpretations and decisions, the Architect will endeavor to secure faithful performance by both Owner and Contractor, will not show partiality to either and will not be liable for results of interpretations or decisions rendered in good faith.

§ 4.2.13 The Architect's decisions on matters relating to aesthetic effect will be final if consistent with the intent expressed in the Contract Documents.

AIA Document A201™ – 2007. Copyright © 1911, 1915, 1918, 1925, 1937, 1951, 1958, 1961, 1963, 1966, 1970, 1976, 1987, 1997 and 2007 by The American Institute of Architects. **All rights reserved. WARNING: This AIA® Document is protected by U.S. Copyright Law and International Treaties. Unauthorized reproduction or distribution of this AIA® Document, or any portion of it, may result in severe civil and criminal penalties, and will be prosecuted to the maximum extent possible under the law.** This draft was produced by AIA software at 12:18:39 on 08/09/2013 under Order No.4849340381_1 which expires on 02/11/2014, and is not for resale.
User Notes: (726487366)

§ 4.2.14 The Architect will review and respond to requests for information about the Contract Documents. The Architect's response to such requests will be made in writing within any time limits agreed upon or otherwise with reasonable promptness. If appropriate, the Architect will prepare and issue supplemental Drawings and Specifications in response to the requests for information.

ARTICLE 5 SUBCONTRACTORS

§ 5.1 DEFINITIONS

§ 5.1.1 A Subcontractor is a person or entity who has a direct contract with the Contractor to perform a portion of the Work at the site. The term "Subcontractor" is referred to throughout the Contract Documents as if singular in number and means a Subcontractor or an authorized representative of the Subcontractor. The term "Subcontractor" does not include a separate contractor or subcontractors of a separate contractor.

§ 5.1.2 A Sub-subcontractor is a person or entity who has a direct or indirect contract with a Subcontractor to perform a portion of the Work at the site. The term "Sub-subcontractor" is referred to throughout the Contract Documents as if singular in number and means a Sub-subcontractor or an authorized representative of the Sub-subcontractor.

§ 5.2 AWARD OF SUBCONTRACTS AND OTHER CONTRACTS FOR PORTIONS OF THE WORK

§ 5.2.1 Unless otherwise stated in the Contract Documents or the bidding requirements, the Contractor, as soon as practicable after award of the Contract, shall furnish in writing to the Owner through the Architect the names of persons or entities (including those who are to furnish materials or equipment fabricated to a special design) proposed for each principal portion of the Work. The Architect may reply within 14 days to the Contractor in writing stating (1) whether the Owner or the Architect has reasonable objection to any such proposed person or entity or (2) that the Architect requires additional time for review. Failure of the Owner or Architect to reply within the 14-day period shall constitute notice of no reasonable objection.

§ 5.2.2 The Contractor shall not contract with a proposed person or entity to whom the Owner or Architect has made reasonable and timely objection. The Contractor shall not be required to contract with anyone to whom the Contractor has made reasonable objection.

§ 5.2.3 If the Owner or Architect has reasonable objection to a person or entity proposed by the Contractor, the Contractor shall propose another to whom the Owner or Architect has no reasonable objection. If the proposed but rejected Subcontractor was reasonably capable of performing the Work, the Contract Sum and Contract Time shall be increased or decreased by the difference, if any, occasioned by such change, and an appropriate Change Order shall be issued before commencement of the substitute Subcontractor's Work. However, no increase in the Contract Sum or Contract Time shall be allowed for such change unless the Contractor has acted promptly and responsively in submitting names as required.

§ 5.2.4 The Contractor shall not substitute a Subcontractor, person or entity previously selected if the Owner or Architect makes reasonable objection to such substitution.

§ 5.3 SUBCONTRACTUAL RELATIONS

By appropriate agreement, written where legally required for validity, the Contractor shall require each Subcontractor, to the extent of the Work to be performed by the Subcontractor, to be bound to the Contractor by terms of the Contract Documents, and to assume toward the Contractor all the obligations and responsibilities, including the responsibility for safety of the Subcontractor's Work, which the Contractor, by these Documents, assumes toward the Owner and Architect. Each subcontract agreement shall preserve and protect the rights of the Owner and Architect under the Contract Documents with respect to the Work to be performed by the Subcontractor so that subcontracting thereof will not prejudice such rights, and shall allow to the Subcontractor, unless specifically provided otherwise in the subcontract agreement, the benefit of all rights, remedies and redress against the Contractor that the Contractor, by the Contract Documents, has against the Owner. Where appropriate, the Contractor shall require each Subcontractor to enter into similar agreements with Sub-subcontractors. The Contractor shall make available to each proposed Subcontractor, prior to the execution of the subcontract agreement, copies of the Contract Documents to which the Subcontractor will be bound, and, upon written request of the Subcontractor, identify to the Subcontractor terms and conditions of the proposed subcontract agreement that may

AIA Document A201™ – 2007. Copyright © 1911, 1915, 1918, 1925, 1937, 1951, 1958, 1961, 1963, 1966, 1970, 1976, 1987, 1997 and 2007 by The American Institute of Architects. **All rights reserved. WARNING: This AIA® Document is protected by U.S. Copyright Law and International Treaties. Unauthorized reproduction or distribution of this AIA® Document, or any portion of it, may result in severe civil and criminal penalties, and will be prosecuted to the maximum extent possible under the law.** This draft was produced by AIA software at 12:18:39 on 08/09/2013 under Order No.4849340381_1 which expires on 02/11/2014, and is not for resale.
User Notes: (726487366)

be at variance with the Contract Documents. Subcontractors will similarly make copies of applicable portions of such documents available to their respective proposed Sub-subcontractors.

§ 5.4 CONTINGENT ASSIGNMENT OF SUBCONTRACTS

§ 5.4.1 Each subcontract agreement for a portion of the Work is assigned by the Contractor to the Owner, provided that

- **.1** assignment is effective only after termination of the Contract by the Owner for cause pursuant to Section 14.2 and only for those subcontract agreements that the Owner accepts by notifying the Subcontractor and Contractor in writing; and
- **.2** assignment is subject to the prior rights of the surety, if any, obligated under bond relating to the Contract.

When the Owner accepts the assignment of a subcontract agreement, the Owner assumes the Contractor's rights and obligations under the subcontract.

§ 5.4.2 Upon such assignment, if the Work has been suspended for more than 30 days, the Subcontractor's compensation shall be equitably adjusted for increases in cost resulting from the suspension.

§ 5.4.3 Upon such assignment to the Owner under this Section 5.4, the Owner may further assign the subcontract to a successor contractor or other entity. If the Owner assigns the subcontract to a successor contractor or other entity, the Owner shall nevertheless remain legally responsible for all of the successor contractor's obligations under the subcontract.

ARTICLE 6 CONSTRUCTION BY OWNER OR BY SEPARATE CONTRACTORS

§ 6.1 OWNER'S RIGHT TO PERFORM CONSTRUCTION AND TO AWARD SEPARATE CONTRACTS

§ 6.1.1 The Owner reserves the right to perform construction or operations related to the Project with the Owner's own forces, and to award separate contracts in connection with other portions of the Project or other construction or operations on the site under Conditions of the Contract identical or substantially similar to these including those portions related to insurance and waiver of subrogation. If the Contractor claims that delay or additional cost is involved because of such action by the Owner, the Contractor shall make such Claim as provided in Article 15.

§ 6.1.2 When separate contracts are awarded for different portions of the Project or other construction or operations on the site, the term "Contractor" in the Contract Documents in each case shall mean the Contractor who executes each separate Owner-Contractor Agreement.

§ 6.1.3 The Owner shall provide for coordination of the activities of the Owner's own forces and of each separate contractor with the Work of the Contractor, who shall cooperate with them. The Contractor shall participate with other separate contractors and the Owner in reviewing their construction schedules. The Contractor shall make any revisions to the construction schedule deemed necessary after a joint review and mutual agreement. The construction schedules shall then constitute the schedules to be used by the Contractor, separate contractors and the Owner until subsequently revised.

§ 6.1.4 Unless otherwise provided in the Contract Documents, when the Owner performs construction or operations related to the Project with the Owner's own forces, the Owner shall be deemed to be subject to the same obligations and to have the same rights that apply to the Contractor under the Conditions of the Contract, including, without excluding others, those stated in Article 3, this Article 6 and Articles 10, 11 and 12.

§ 6.2 MUTUAL RESPONSIBILITY

§ 6.2.1 The Contractor shall afford the Owner and separate contractors reasonable opportunity for introduction and storage of their materials and equipment and performance of their activities, and shall connect and coordinate the Contractor's construction and operations with theirs as required by the Contract Documents.

§ 6.2.2 If part of the Contractor's Work depends for proper execution or results upon construction or operations by the Owner or a separate contractor, the Contractor shall, prior to proceeding with that portion of the Work, promptly report to the Architect apparent discrepancies or defects in such other construction that would render it unsuitable for such proper execution and results. Failure of the Contractor so to report shall constitute an acknowledgment that

AIA Document A201™ – 2007. Copyright © 1911, 1915, 1918, 1925, 1937, 1951, 1958, 1961, 1963, 1966, 1970, 1976, 1987, 1997 and 2007 by The American Institute of Architects. **All rights reserved. WARNING: This AIA® Document is protected by U.S. Copyright Law and International Treaties. Unauthorized reproduction or distribution of this AIA® Document, or any portion of it, may result in severe civil and criminal penalties, and will be prosecuted to the maximum extent possible under the law.** This draft was produced by AIA software at 12:18:39 on 08/09/2013 under Order No.4849340381_1 which expires on 02/11/2014, and is not for resale.
User Notes: (726487366)

the Owner's or separate contractor's completed or partially completed construction is fit and proper to receive the Contractor's Work, except as to defects not then reasonably discoverable.

§ 6.2.3 The Contractor shall reimburse the Owner for costs the Owner incurs that are payable to a separate contractor because of the Contractor's delays, improperly timed activities or defective construction. The Owner shall be responsible to the Contractor for costs the Contractor incurs because of a separate contractor's delays, improperly timed activities, damage to the Work or defective construction.

§ 6.2.4 The Contractor shall promptly remedy damage the Contractor wrongfully causes to completed or partially completed construction or to property of the Owner or separate contractors as provided in Section 10.2.5.

§ 6.2.5 The Owner and each separate contractor shall have the same responsibilities for cutting and patching as are described for the Contractor in Section 3.14.

§ 6.3 OWNER'S RIGHT TO CLEAN UP

If a dispute arises among the Contractor, separate contractors and the Owner as to the responsibility under their respective contracts for maintaining the premises and surrounding area free from waste materials and rubbish, the Owner may clean up and the Architect will allocate the cost among those responsible.

ARTICLE 7 CHANGES IN THE WORK

§ 7.1 GENERAL

§ 7.1.1 Changes in the Work may be accomplished after execution of the Contract, and without invalidating the Contract, by Change Order, Construction Change Directive or order for a minor change in the Work, subject to the limitations stated in this Article 7 and elsewhere in the Contract Documents.

§ 7.1.2 A Change Order shall be based upon agreement among the Owner, Contractor and Architect; a Construction Change Directive requires agreement by the Owner and Architect and may or may not be agreed to by the Contractor; an order for a minor change in the Work may be issued by the Architect alone.

§ 7.1.3 Changes in the Work shall be performed under applicable provisions of the Contract Documents, and the Contractor shall proceed promptly, unless otherwise provided in the Change Order, Construction Change Directive or order for a minor change in the Work.

§ 7.2 CHANGE ORDERS

§ 7.2.1 A Change Order is a written instrument prepared by the Architect and signed by the Owner, Contractor and Architect stating their agreement upon all of the following:

- **.1** The change in the Work;
- **.2** The amount of the adjustment, if any, in the Contract Sum; and
- **.3** The extent of the adjustment, if any, in the Contract Time.

§ 7.3 CONSTRUCTION CHANGE DIRECTIVES

§ 7.3.1 A Construction Change Directive is a written order prepared by the Architect and signed by the Owner and Architect, directing a change in the Work prior to agreement on adjustment, if any, in the Contract Sum or Contract Time, or both. The Owner may by Construction Change Directive, without invalidating the Contract, order changes in the Work within the general scope of the Contract consisting of additions, deletions or other revisions, the Contract Sum and Contract Time being adjusted accordingly.

§ 7.3.2 A Construction Change Directive shall be used in the absence of total agreement on the terms of a Change Order.

§ 7.3.3 If the Construction Change Directive provides for an adjustment to the Contract Sum, the adjustment shall be based on one of the following methods:

- **.1** Mutual acceptance of a lump sum properly itemized and supported by sufficient substantiating data to permit evaluation;
- **.2** Unit prices stated in the Contract Documents or subsequently agreed upon;
- **.3** Cost to be determined in a manner agreed upon by the parties and a mutually acceptable fixed or percentage fee; or

AIA Document A201™ – 2007. Copyright © 1911, 1915, 1918, 1925, 1937, 1951, 1958, 1961, 1963, 1966, 1970, 1976, 1987, 1997 and 2007 by The American Institute of Architects. **All rights reserved. WARNING: This AIA® Document is protected by U.S. Copyright Law and International Treaties. Unauthorized reproduction or distribution of this AIA® Document, or any portion of it, may result in severe civil and criminal penalties, and will be prosecuted to the maximum extent possible under the law.** This draft was produced by AIA software at 12:18:39 on 08/09/2013 under Order No.4849340381_1 which expires on 02/11/2014, and is not for resale.
User Notes: (726487366)

.4 As provided in Section 7.3.7.

§ 7.3.4 If unit prices are stated in the Contract Documents or subsequently agreed upon, and if quantities originally contemplated are materially changed in a proposed Change Order or Construction Change Directive so that application of such unit prices to quantities of Work proposed will cause substantial inequity to the Owner or Contractor, the applicable unit prices shall be equitably adjusted.

§ 7.3.5 Upon receipt of a Construction Change Directive, the Contractor shall promptly proceed with the change in the Work involved and advise the Architect of the Contractor's agreement or disagreement with the method, if any, provided in the Construction Change Directive for determining the proposed adjustment in the Contract Sum or Contract Time.

§ 7.3.6 A Construction Change Directive signed by the Contractor indicates the Contractor's agreement therewith, including adjustment in Contract Sum and Contract Time or the method for determining them. Such agreement shall be effective immediately and shall be recorded as a Change Order.

§ 7.3.7 If the Contractor does not respond promptly or disagrees with the method for adjustment in the Contract Sum, the Architect shall determine the method and the adjustment on the basis of reasonable expenditures and savings of those performing the Work attributable to the change, including, in case of an increase in the Contract Sum, an amount for overhead and profit as set forth in the Agreement, or if no such amount is set forth in the Agreement, a reasonable amount. In such case, and also under Section 7.3.3.3, the Contractor shall keep and present, in such form as the Architect may prescribe, an itemized accounting together with appropriate supporting data. Unless otherwise provided in the Contract Documents, costs for the purposes of this Section 7.3.7 shall be limited to the following:

.1 Costs of labor, including social security, old age and unemployment insurance, fringe benefits required by agreement or custom, and workers' compensation insurance;

.2 Costs of materials, supplies and equipment, including cost of transportation, whether incorporated or consumed;

.3 Rental costs of machinery and equipment, exclusive of hand tools, whether rented from the Contractor or others;

.4 Costs of premiums for all bonds and insurance, permit fees, and sales, use or similar taxes related to the Work; and

.5 Additional costs of supervision and field office personnel directly attributable to the change.

§ 7.3.8 The amount of credit to be allowed by the Contractor to the Owner for a deletion or change that results in a net decrease in the Contract Sum shall be actual net cost as confirmed by the Architect. When both additions and credits covering related Work or substitutions are involved in a change, the allowance for overhead and profit shall be figured on the basis of net increase, if any, with respect to that change.

§ 7.3.9 Pending final determination of the total cost of a Construction Change Directive to the Owner, the Contractor may request payment for Work completed under the Construction Change Directive in Applications for Payment. The Architect will make an interim determination for purposes of monthly certification for payment for those costs and certify for payment the amount that the Architect determines, in the Architect's professional judgment, to be reasonably justified. The Architect's interim determination of cost shall adjust the Contract Sum on the same basis as a Change Order, subject to the right of either party to disagree and assert a Claim in accordance with Article 15.

§ 7.3.10 When the Owner and Contractor agree with a determination made by the Architect concerning the adjustments in the Contract Sum and Contract Time, or otherwise reach agreement upon the adjustments, such agreement shall be effective immediately and the Architect will prepare a Change Order. Change Orders may be issued for all or any part of a Construction Change Directive.

§ 7.4 MINOR CHANGES IN THE WORK

The Architect has authority to order minor changes in the Work not involving adjustment in the Contract Sum or extension of the Contract Time and not inconsistent with the intent of the Contract Documents. Such changes will be effected by written order signed by the Architect and shall be binding on the Owner and Contractor.

AIA Document A201™ – 2007. Copyright © 1911, 1915, 1918, 1925, 1937, 1951, 1958, 1961, 1963, 1966, 1970, 1976, 1987, 1997 and 2007 by The American Institute of Architects. **All rights reserved. WARNING: This AIA® Document is protected by U.S. Copyright Law and International Treaties. Unauthorized reproduction or distribution of this AIA® Document, or any portion of it, may result in severe civil and criminal penalties, and will be prosecuted to the maximum extent possible under the law.** This draft was produced by AIA software at 12:18:39 on 08/09/2013 under Order No.4849340381_1 which expires on 02/11/2014, and is not for resale.
User Notes: (726487366)

ARTICLE 8 TIME

§ 8.1 DEFINITIONS

§ 8.1.1 Unless otherwise provided, Contract Time is the period of time, including authorized adjustments, allotted in the Contract Documents for Substantial Completion of the Work.

§ 8.1.2 The date of commencement of the Work is the date established in the Agreement.

§ 8.1.3 The date of Substantial Completion is the date certified by the Architect in accordance with Section 9.8.

§ 8.1.4 The term "day" as used in the Contract Documents shall mean calendar day unless otherwise specifically defined.

§ 8.2 PROGRESS AND COMPLETION

§ 8.2.1 Time limits stated in the Contract Documents are of the essence of the Contract. By executing the Agreement the Contractor confirms that the Contract Time is a reasonable period for performing the Work.

§ 8.2.2 The Contractor shall not knowingly, except by agreement or instruction of the Owner in writing, prematurely commence operations on the site or elsewhere prior to the effective date of insurance required by Article 11 to be furnished by the Contractor and Owner. The date of commencement of the Work shall not be changed by the effective date of such insurance.

§ 8.2.3 The Contractor shall proceed expeditiously with adequate forces and shall achieve Substantial Completion within the Contract Time.

§ 8.3 DELAYS AND EXTENSIONS OF TIME

§ 8.3.1 If the Contractor is delayed at any time in the commencement or progress of the Work by an act or neglect of the Owner or Architect, or of an employee of either, or of a separate contractor employed by the Owner; or by changes ordered in the Work; or by labor disputes, fire, unusual delay in deliveries, unavoidable casualties or other causes beyond the Contractor's control; or by delay authorized by the Owner pending mediation and arbitration; or by other causes that the Architect determines may justify delay, then the Contract Time shall be extended by Change Order for such reasonable time as the Architect may determine.

§ 8.3.2 Claims relating to time shall be made in accordance with applicable provisions of Article 15.

§ 8.3.3 This Section 8.3 does not preclude recovery of damages for delay by either party under other provisions of the Contract Documents.

ARTICLE 9 PAYMENTS AND COMPLETION

§ 9.1 CONTRACT SUM

The Contract Sum is stated in the Agreement and, including authorized adjustments, is the total amount payable by the Owner to the Contractor for performance of the Work under the Contract Documents.

§ 9.2 SCHEDULE OF VALUES

Where the Contract is based on a stipulated sum or Guaranteed Maximum Price, the Contractor shall submit to the Architect, before the first Application for Payment, a schedule of values allocating the entire Contract Sum to the various portions of the Work and prepared in such form and supported by such data to substantiate its accuracy as the Architect may require. This schedule, unless objected to by the Architect, shall be used as a basis for reviewing the Contractor's Applications for Payment.

§ 9.3 APPLICATIONS FOR PAYMENT

§ 9.3.1 At least ten days before the date established for each progress payment, the Contractor shall submit to the Architect an itemized Application for Payment prepared in accordance with the schedule of values, if required under Section 9.2, for completed portions of the Work. Such application shall be notarized, if required, and supported by such data substantiating the Contractor's right to payment as the Owner or Architect may require, such as copies of requisitions from Subcontractors and material suppliers, and shall reflect retainage if provided for in the Contract Documents.

AIA Document A201™ – 2007. Copyright © 1911, 1915, 1918, 1925, 1937, 1951, 1958, 1961, 1963, 1966, 1970, 1976, 1987, 1997 and 2007 by The American Institute of Architects. **All rights reserved. WARNING: This AIA® Document is protected by U.S. Copyright Law and International Treaties. Unauthorized reproduction or distribution of this AIA® Document, or any portion of it, may result in severe civil and criminal penalties, and will be prosecuted to the maximum extent possible under the law.** This draft was produced by AIA software at 12:18:39 on 08/09/2013 under Order No.4849340381_1 which expires on 02/11/2014, and is not for resale.
User Notes: (726487366)

§ 9.3.1.1 As provided in Section 7.3.9, such applications may include requests for payment on account of changes in the Work that have been properly authorized by Construction Change Directives, or by interim determinations of the Architect, but not yet included in Change Orders.

§ 9.3.1.2 Applications for Payment shall not include requests for payment for portions of the Work for which the Contractor does not intend to pay a Subcontractor or material supplier, unless such Work has been performed by others whom the Contractor intends to pay.

§ 9.3.2 Unless otherwise provided in the Contract Documents, payments shall be made on account of materials and equipment delivered and suitably stored at the site for subsequent incorporation in the Work. If approved in advance by the Owner, payment may similarly be made for materials and equipment suitably stored off the site at a location agreed upon in writing. Payment for materials and equipment stored on or off the site shall be conditioned upon compliance by the Contractor with procedures satisfactory to the Owner to establish the Owner's title to such materials and equipment or otherwise protect the Owner's interest, and shall include the costs of applicable insurance, storage and transportation to the site for such materials and equipment stored off the site.

§ 9.3.3 The Contractor warrants that title to all Work covered by an Application for Payment will pass to the Owner no later than the time of payment. The Contractor further warrants that upon submittal of an Application for Payment all Work for which Certificates for Payment have been previously issued and payments received from the Owner shall, to the best of the Contractor's knowledge, information and belief, be free and clear of liens, claims, security interests or encumbrances in favor of the Contractor, Subcontractors, material suppliers, or other persons or entities making a claim by reason of having provided labor, materials and equipment relating to the Work.

§ 9.4 CERTIFICATES FOR PAYMENT

§ 9.4.1 The Architect will, within seven days after receipt of the Contractor's Application for Payment, either issue to the Owner a Certificate for Payment, with a copy to the Contractor, for such amount as the Architect determines is properly due, or notify the Contractor and Owner in writing of the Architect's reasons for withholding certification in whole or in part as provided in Section 9.5.1.

§ 9.4.2 The issuance of a Certificate for Payment will constitute a representation by the Architect to the Owner, based on the Architect's evaluation of the Work and the data comprising the Application for Payment, that, to the best of the Architect's knowledge, information and belief, the Work has progressed to the point indicated and that the quality of the Work is in accordance with the Contract Documents. The foregoing representations are subject to an evaluation of the Work for conformance with the Contract Documents upon Substantial Completion, to results of subsequent tests and inspections, to correction of minor deviations from the Contract Documents prior to completion and to specific qualifications expressed by the Architect. The issuance of a Certificate for Payment will further constitute a representation that the Contractor is entitled to payment in the amount certified. However, the issuance of a Certificate for Payment will not be a representation that the Architect has (1) made exhaustive or continuous on-site inspections to check the quality or quantity of the Work, (2) reviewed construction means, methods, techniques, sequences or procedures, (3) reviewed copies of requisitions received from Subcontractors and material suppliers and other data requested by the Owner to substantiate the Contractor's right to payment, or (4) made examination to ascertain how or for what purpose the Contractor has used money previously paid on account of the Contract Sum.

§ 9.5 DECISIONS TO WITHHOLD CERTIFICATION

§ 9.5.1 The Architect may withhold a Certificate for Payment in whole or in part, to the extent reasonably necessary to protect the Owner, if in the Architect's opinion the representations to the Owner required by Section 9.4.2 cannot be made. If the Architect is unable to certify payment in the amount of the Application, the Architect will notify the Contractor and Owner as provided in Section 9.4.1. If the Contractor and Architect cannot agree on a revised amount, the Architect will promptly issue a Certificate for Payment for the amount for which the Architect is able to make such representations to the Owner. The Architect may also withhold a Certificate for Payment or, because of subsequently discovered evidence, may nullify the whole or a part of a Certificate for Payment previously issued, to such extent as may be necessary in the Architect's opinion to protect the Owner from loss for which the Contractor is responsible, including loss resulting from acts and omissions described in Section 3.3.2, because of

- **.1** defective Work not remedied;
- **.2** third party claims filed or reasonable evidence indicating probable filing of such claims unless security acceptable to the Owner is provided by the Contractor;

AIA Document A201™ – 2007. Copyright © 1911, 1915, 1918, 1925, 1937, 1951, 1958, 1961, 1963, 1966, 1970, 1976, 1987, 1997 and 2007 by The American Institute of Architects. **All rights reserved. WARNING: This AIA® Document is protected by U.S. Copyright Law and International Treaties. Unauthorized reproduction or distribution of this AIA® Document, or any portion of it, may result in severe civil and criminal penalties, and will be prosecuted to the maximum extent possible under the law.** This draft was produced by AIA software at 12:18:39 on 08/09/2013 under Order No.4849340381_1 which expires on 02/11/2014, and is not for resale.
User Notes: (726487366)

.3 failure of the Contractor to make payments properly to Subcontractors or for labor, materials or equipment;
.4 reasonable evidence that the Work cannot be completed for the unpaid balance of the Contract Sum;
.5 damage to the Owner or a separate contractor;
.6 reasonable evidence that the Work will not be completed within the Contract Time, and that the unpaid balance would not be adequate to cover actual or liquidated damages for the anticipated delay; or
.7 repeated failure to carry out the Work in accordance with the Contract Documents.

§ 9.5.2 When the above reasons for withholding certification are removed, certification will be made for amounts previously withheld.

§ 9.5.3 If the Architect withholds certification for payment under Section 9.5.1.3, the Owner may, at its sole option, issue joint checks to the Contractor and to any Subcontractor or material or equipment suppliers to whom the Contractor failed to make payment for Work properly performed or material or equipment suitably delivered. If the Owner makes payments by joint check, the Owner shall notify the Architect and the Architect will reflect such payment on the next Certificate for Payment.

§ 9.6 PROGRESS PAYMENTS

§ 9.6.1 After the Architect has issued a Certificate for Payment, the Owner shall make payment in the manner and within the time provided in the Contract Documents, and shall so notify the Architect.

§ 9.6.2 The Contractor shall pay each Subcontractor no later than seven days after receipt of payment from the Owner the amount to which the Subcontractor is entitled, reflecting percentages actually retained from payments to the Contractor on account of the Subcontractor's portion of the Work. The Contractor shall, by appropriate agreement with each Subcontractor, require each Subcontractor to make payments to Sub-subcontractors in a similar manner.

§ 9.6.3 The Architect will, on request, furnish to a Subcontractor, if practicable, information regarding percentages of completion or amounts applied for by the Contractor and action taken thereon by the Architect and Owner on account of portions of the Work done by such Subcontractor.

§ 9.6.4 The Owner has the right to request written evidence from the Contractor that the Contractor has properly paid Subcontractors and material and equipment suppliers amounts paid by the Owner to the Contractor for subcontracted Work. If the Contractor fails to furnish such evidence within seven days, the Owner shall have the right to contact Subcontractors to ascertain whether they have been properly paid. Neither the Owner nor Architect shall have an obligation to pay or to see to the payment of money to a Subcontractor, except as may otherwise be required by law.

§ 9.6.5 Contractor payments to material and equipment suppliers shall be treated in a manner similar to that provided in Sections 9.6.2, 9.6.3 and 9.6.4.

§ 9.6.6 A Certificate for Payment, a progress payment, or partial or entire use or occupancy of the Project by the Owner shall not constitute acceptance of Work not in accordance with the Contract Documents.

§ 9.6.7 Unless the Contractor provides the Owner with a payment bond in the full penal sum of the Contract Sum, payments received by the Contractor for Work properly performed by Subcontractors and suppliers shall be held by the Contractor for those Subcontractors or suppliers who performed Work or furnished materials, or both, under contract with the Contractor for which payment was made by the Owner. Nothing contained herein shall require money to be placed in a separate account and not commingled with money of the Contractor, shall create any fiduciary liability or tort liability on the part of the Contractor for breach of trust or shall entitle any person or entity to an award of punitive damages against the Contractor for breach of the requirements of this provision.

§ 9.7 FAILURE OF PAYMENT

If the Architect does not issue a Certificate for Payment, through no fault of the Contractor, within seven days after receipt of the Contractor's Application for Payment, or if the Owner does not pay the Contractor within seven days after the date established in the Contract Documents the amount certified by the Architect or awarded by binding dispute resolution, then the Contractor may, upon seven additional days' written notice to the Owner and Architect,

AIA Document A201™ – 2007. Copyright © 1911, 1915, 1918, 1925, 1937, 1951, 1958, 1961, 1963, 1966, 1970, 1976, 1987, 1997 and 2007 by The American Institute of Architects. **All rights reserved. WARNING: This AIA® Document is protected by U.S. Copyright Law and International Treaties. Unauthorized reproduction or distribution of this AIA® Document, or any portion of it, may result in severe civil and criminal penalties, and will be prosecuted to the maximum extent possible under the law.** This draft was produced by AIA software at 12:18:39 on 08/09/2013 under Order No.4849340381_1 which expires on 02/11/2014, and is not for resale.
User Notes: (726487366)

stop the Work until payment of the amount owing has been received. The Contract Time shall be extended appropriately and the Contract Sum shall be increased by the amount of the Contractor's reasonable costs of shut-down, delay and start-up, plus interest as provided for in the Contract Documents.

§ 9.8 SUBSTANTIAL COMPLETION

§ 9.8.1 Substantial Completion is the stage in the progress of the Work when the Work or designated portion thereof is sufficiently complete in accordance with the Contract Documents so that the Owner can occupy or utilize the Work for its intended use.

§ 9.8.2 When the Contractor considers that the Work, or a portion thereof which the Owner agrees to accept separately, is substantially complete, the Contractor shall prepare and submit to the Architect a comprehensive list of items to be completed or corrected prior to final payment. Failure to include an item on such list does not alter the responsibility of the Contractor to complete all Work in accordance with the Contract Documents.

§ 9.8.3 Upon receipt of the Contractor's list, the Architect will make an inspection to determine whether the Work or designated portion thereof is substantially complete. If the Architect's inspection discloses any item, whether or not included on the Contractor's list, which is not sufficiently complete in accordance with the Contract Documents so that the Owner can occupy or utilize the Work or designated portion thereof for its intended use, the Contractor shall, before issuance of the Certificate of Substantial Completion, complete or correct such item upon notification by the Architect. In such case, the Contractor shall then submit a request for another inspection by the Architect to determine Substantial Completion.

§ 9.8.4 When the Work or designated portion thereof is substantially complete, the Architect will prepare a Certificate of Substantial Completion that shall establish the date of Substantial Completion, shall establish responsibilities of the Owner and Contractor for security, maintenance, heat, utilities, damage to the Work and insurance, and shall fix the time within which the Contractor shall finish all items on the list accompanying the Certificate. Warranties required by the Contract Documents shall commence on the date of Substantial Completion of the Work or designated portion thereof unless otherwise provided in the Certificate of Substantial Completion.

§ 9.8.5 The Certificate of Substantial Completion shall be submitted to the Owner and Contractor for their written acceptance of responsibilities assigned to them in such Certificate. Upon such acceptance and consent of surety, if any, the Owner shall make payment of retainage applying to such Work or designated portion thereof. Such payment shall be adjusted for Work that is incomplete or not in accordance with the requirements of the Contract Documents.

§ 9.9 PARTIAL OCCUPANCY OR USE

§ 9.9.1 The Owner may occupy or use any completed or partially completed portion of the Work at any stage when such portion is designated by separate agreement with the Contractor, provided such occupancy or use is consented to by the insurer as required under Section 11.3.1.5 and authorized by public authorities having jurisdiction over the Project. Such partial occupancy or use may commence whether or not the portion is substantially complete, provided the Owner and Contractor have accepted in writing the responsibilities assigned to each of them for payments, retainage, if any, security, maintenance, heat, utilities, damage to the Work and insurance, and have agreed in writing concerning the period for correction of the Work and commencement of warranties required by the Contract Documents. When the Contractor considers a portion substantially complete, the Contractor shall prepare and submit a list to the Architect as provided under Section 9.8.2. Consent of the Contractor to partial occupancy or use shall not be unreasonably withheld. The stage of the progress of the Work shall be determined by written agreement between the Owner and Contractor or, if no agreement is reached, by decision of the Architect.

§ 9.9.2 Immediately prior to such partial occupancy or use, the Owner, Contractor and Architect shall jointly inspect the area to be occupied or portion of the Work to be used in order to determine and record the condition of the Work.

§ 9.9.3 Unless otherwise agreed upon, partial occupancy or use of a portion or portions of the Work shall not constitute acceptance of Work not complying with the requirements of the Contract Documents.

§ 9.10 FINAL COMPLETION AND FINAL PAYMENT

§ 9.10.1 Upon receipt of the Contractor's written notice that the Work is ready for final inspection and acceptance and upon receipt of a final Application for Payment, the Architect will promptly make such inspection and, when the

AIA Document A201™ – 2007. Copyright © 1911, 1915, 1918, 1925, 1937, 1951, 1958, 1961, 1963, 1966, 1970, 1976, 1987, 1997 and 2007 by The American Institute of Architects. **All rights reserved.** **WARNING: This AIA® Document is protected by U.S. Copyright Law and International Treaties. Unauthorized reproduction or distribution of this AIA® Document, or any portion of it, may result in severe civil and criminal penalties, and will be prosecuted to the maximum extent possible under the law.** This draft was produced by AIA software at 12:18:39 on 08/09/2013 under Order No.4849340381_1 which expires on 02/11/2014, and is not for resale.
User Notes: (726487366)

Architect finds the Work acceptable under the Contract Documents and the Contract fully performed, the Architect will promptly issue a final Certificate for Payment stating that to the best of the Architect's knowledge, information and belief, and on the basis of the Architect's on-site visits and inspections, the Work has been completed in accordance with terms and conditions of the Contract Documents and that the entire balance found to be due the Contractor and noted in the final Certificate is due and payable. The Architect's final Certificate for Payment will constitute a further representation that conditions listed in Section 9.10.2 as precedent to the Contractor's being entitled to final payment have been fulfilled.

§ 9.10.2 Neither final payment nor any remaining retained percentage shall become due until the Contractor submits to the Architect (1) an affidavit that payrolls, bills for materials and equipment, and other indebtedness connected with the Work for which the Owner or the Owner's property might be responsible or encumbered (less amounts withheld by Owner) have been paid or otherwise satisfied, (2) a certificate evidencing that insurance required by the Contract Documents to remain in force after final payment is currently in effect and will not be canceled or allowed to expire until at least 30 days' prior written notice has been given to the Owner, (3) a written statement that the Contractor knows of no substantial reason that the insurance will not be renewable to cover the period required by the Contract Documents, (4) consent of surety, if any, to final payment and (5), if required by the Owner, other data establishing payment or satisfaction of obligations, such as receipts, releases and waivers of liens, claims, security interests or encumbrances arising out of the Contract, to the extent and in such form as may be designated by the Owner. If a Subcontractor refuses to furnish a release or waiver required by the Owner, the Contractor may furnish a bond satisfactory to the Owner to indemnify the Owner against such lien. If such lien remains unsatisfied after payments are made, the Contractor shall refund to the Owner all money that the Owner may be compelled to pay in discharging such lien, including all costs and reasonable attorneys' fees.

§ 9.10.3 If, after Substantial Completion of the Work, final completion thereof is materially delayed through no fault of the Contractor or by issuance of Change Orders affecting final completion, and the Architect so confirms, the Owner shall, upon application by the Contractor and certification by the Architect, and without terminating the Contract, make payment of the balance due for that portion of the Work fully completed and accepted. If the remaining balance for Work not fully completed or corrected is less than retainage stipulated in the Contract Documents, and if bonds have been furnished, the written consent of surety to payment of the balance due for that portion of the Work fully completed and accepted shall be submitted by the Contractor to the Architect prior to certification of such payment. Such payment shall be made under terms and conditions governing final payment, except that it shall not constitute a waiver of claims.

§ 9.10.4 The making of final payment shall constitute a waiver of Claims by the Owner except those arising from

- **.1** liens, Claims, security interests or encumbrances arising out of the Contract and unsettled;
- **.2** failure of the Work to comply with the requirements of the Contract Documents; or
- **.3** terms of special warranties required by the Contract Documents.

§ 9.10.5 Acceptance of final payment by the Contractor, a Subcontractor or material supplier shall constitute a waiver of claims by that payee except those previously made in writing and identified by that payee as unsettled at the time of final Application for Payment.

ARTICLE 10 PROTECTION OF PERSONS AND PROPERTY

§ 10.1 SAFETY PRECAUTIONS AND PROGRAMS

The Contractor shall be responsible for initiating, maintaining and supervising all safety precautions and programs in connection with the performance of the Contract.

§ 10.2 SAFETY OF PERSONS AND PROPERTY

§ 10.2.1 The Contractor shall take reasonable precautions for safety of, and shall provide reasonable protection to prevent damage, injury or loss to

- **.1** employees on the Work and other persons who may be affected thereby;
- **.2** the Work and materials and equipment to be incorporated therein, whether in storage on or off the site, under care, custody or control of the Contractor or the Contractor's Subcontractors or Sub-subcontractors; and
- **.3** other property at the site or adjacent thereto, such as trees, shrubs, lawns, walks, pavements, roadways, structures and utilities not designated for removal, relocation or replacement in the course of construction.

AIA Document A201™ – 2007. Copyright © 1911, 1915, 1918, 1925, 1937, 1951, 1958, 1961, 1963, 1966, 1970, 1976, 1987, 1997 and 2007 by The American Institute of Architects. **All rights reserved. WARNING: This AIA® Document is protected by U.S. Copyright Law and International Treaties. Unauthorized reproduction or distribution of this AIA® Document, or any portion of it, may result in severe civil and criminal penalties, and will be prosecuted to the maximum extent possible under the law.** This draft was produced by AIA software at 12:18:39 on 08/09/2013 under Order No.4849340381_1 which expires on 02/11/2014, and is not for resale.
User Notes: (726487366)

§ 10.2.2 The Contractor shall comply with and give notices required by applicable laws, statutes, ordinances, codes, rules and regulations, and lawful orders of public authorities bearing on safety of persons or property or their protection from damage, injury or loss.

§ 10.2.3 The Contractor shall erect and maintain, as required by existing conditions and performance of the Contract, reasonable safeguards for safety and protection, including posting danger signs and other warnings against hazards, promulgating safety regulations and notifying owners and users of adjacent sites and utilities.

§ 10.2.4 When use or storage of explosives or other hazardous materials or equipment or unusual methods are necessary for execution of the Work, the Contractor shall exercise utmost care and carry on such activities under supervision of properly qualified personnel.

§ 10.2.5 The Contractor shall promptly remedy damage and loss (other than damage or loss insured under property insurance required by the Contract Documents) to property referred to in Sections 10.2.1.2 and 10.2.1.3 caused in whole or in part by the Contractor, a Subcontractor, a Sub-subcontractor, or anyone directly or indirectly employed by any of them, or by anyone for whose acts they may be liable and for which the Contractor is responsible under Sections 10.2.1.2 and 10.2.1.3, except damage or loss attributable to acts or omissions of the Owner or Architect or anyone directly or indirectly employed by either of them, or by anyone for whose acts either of them may be liable, and not attributable to the fault or negligence of the Contractor. The foregoing obligations of the Contractor are in addition to the Contractor's obligations under Section 3.18.

§ 10.2.6 The Contractor shall designate a responsible member of the Contractor's organization at the site whose duty shall be the prevention of accidents. This person shall be the Contractor's superintendent unless otherwise designated by the Contractor in writing to the Owner and Architect.

§ 10.2.7 The Contractor shall not permit any part of the construction or site to be loaded so as to cause damage or create an unsafe condition.

§ 10.2.8 INJURY OR DAMAGE TO PERSON OR PROPERTY
If either party suffers injury or damage to person or property because of an act or omission of the other party, or of others for whose acts such party is legally responsible, written notice of such injury or damage, whether or not insured, shall be given to the other party within a reasonable time not exceeding 21 days after discovery. The notice shall provide sufficient detail to enable the other party to investigate the matter.

§ 10.3 HAZARDOUS MATERIALS
§ 10.3.1 The Contractor is responsible for compliance with any requirements included in the Contract Documents regarding hazardous materials. If the Contractor encounters a hazardous material or substance not addressed in the Contract Documents and if reasonable precautions will be inadequate to prevent foreseeable bodily injury or death to persons resulting from a material or substance, including but not limited to asbestos or polychlorinated biphenyl (PCB), encountered on the site by the Contractor, the Contractor shall, upon recognizing the condition, immediately stop Work in the affected area and report the condition to the Owner and Architect in writing.

§ 10.3.2 Upon receipt of the Contractor's written notice, the Owner shall obtain the services of a licensed laboratory to verify the presence or absence of the material or substance reported by the Contractor and, in the event such material or substance is found to be present, to cause it to be rendered harmless. Unless otherwise required by the Contract Documents, the Owner shall furnish in writing to the Contractor and Architect the names and qualifications of persons or entities who are to perform tests verifying the presence or absence of such material or substance or who are to perform the task of removal or safe containment of such material or substance. The Contractor and the Architect will promptly reply to the Owner in writing stating whether or not either has reasonable objection to the persons or entities proposed by the Owner. If either the Contractor or Architect has an objection to a person or entity proposed by the Owner, the Owner shall propose another to whom the Contractor and the Architect have no reasonable objection. When the material or substance has been rendered harmless, Work in the affected area shall resume upon written agreement of the Owner and Contractor. By Change Order, the Contract Time shall be extended appropriately and the Contract Sum shall be increased in the amount of the Contractor's reasonable additional costs of shut-down, delay and start-up.

AIA Document A201™ – 2007. Copyright © 1911, 1915, 1918, 1925, 1937, 1951, 1958, 1961, 1963, 1966, 1970, 1976, 1987, 1997 and 2007 by The American Institute of Architects. **All rights reserved. WARNING: This AIA® Document is protected by U.S. Copyright Law and International Treaties. Unauthorized reproduction or distribution of this AIA® Document, or any portion of it, may result in severe civil and criminal penalties, and will be prosecuted to the maximum extent possible under the law.** This draft was produced by AIA software at 12:18:39 on 08/09/2013 under Order No.4849340381_1 which expires on 02/11/2014, and is not for resale.
User Notes: (726487366)

§ 10.3.3 To the fullest extent permitted by law, the Owner shall indemnify and hold harmless the Contractor, Subcontractors, Architect, Architect's consultants and agents and employees of any of them from and against claims, damages, losses and expenses, including but not limited to attorneys' fees, arising out of or resulting from performance of the Work in the affected area if in fact the material or substance presents the risk of bodily injury or death as described in Section 10.3.1 and has not been rendered harmless, provided that such claim, damage, loss or expense is attributable to bodily injury, sickness, disease or death, or to injury to or destruction of tangible property (other than the Work itself), except to the extent that such damage, loss or expense is due to the fault or negligence of the party seeking indemnity.

§ 10.3.4 The Owner shall not be responsible under this Section 10.3 for materials or substances the Contractor brings to the site unless such materials or substances are required by the Contract Documents. The Owner shall be responsible for materials or substances required by the Contract Documents, except to the extent of the Contractor's fault or negligence in the use and handling of such materials or substances.

§ 10.3.5 The Contractor shall indemnify the Owner for the cost and expense the Owner incurs (1) for remediation of a material or substance the Contractor brings to the site and negligently handles, or (2) where the Contractor fails to perform its obligations under Section 10.3.1, except to the extent that the cost and expense are due to the Owner's fault or negligence.

§ 10.3.6 If, without negligence on the part of the Contractor, the Contractor is held liable by a government agency for the cost of remediation of a hazardous material or substance solely by reason of performing Work as required by the Contract Documents, the Owner shall indemnify the Contractor for all cost and expense thereby incurred.

§ 10.4 EMERGENCIES

In an emergency affecting safety of persons or property, the Contractor shall act, at the Contractor's discretion, to prevent threatened damage, injury or loss. Additional compensation or extension of time claimed by the Contractor on account of an emergency shall be determined as provided in Article 15 and Article 7.

ARTICLE 11 INSURANCE AND BONDS

§ 11.1 CONTRACTOR'S LIABILITY INSURANCE

§ 11.1.1 The Contractor shall purchase from and maintain in a company or companies lawfully authorized to do business in the jurisdiction in which the Project is located such insurance as will protect the Contractor from claims set forth below which may arise out of or result from the Contractor's operations and completed operations under the Contract and for which the Contractor may be legally liable, whether such operations be by the Contractor or by a Subcontractor or by anyone directly or indirectly employed by any of them, or by anyone for whose acts any of them may be liable:

- **.1** Claims under workers' compensation, disability benefit and other similar employee benefit acts that are applicable to the Work to be performed;
- **.2** Claims for damages because of bodily injury, occupational sickness or disease, or death of the Contractor's employees;
- **.3** Claims for damages because of bodily injury, sickness or disease, or death of any person other than the Contractor's employees;
- **.4** Claims for damages insured by usual personal injury liability coverage;
- **.5** Claims for damages, other than to the Work itself, because of injury to or destruction of tangible property, including loss of use resulting therefrom;
- **.6** Claims for damages because of bodily injury, death of a person or property damage arising out of ownership, maintenance or use of a motor vehicle;
- **.7** Claims for bodily injury or property damage arising out of completed operations; and
- **.8** Claims involving contractual liability insurance applicable to the Contractor's obligations under Section 3.18.

§ 11.1.2 The insurance required by Section 11.1.1 shall be written for not less than limits of liability specified in the Contract Documents or required by law, whichever coverage is greater. Coverages, whether written on an occurrence or claims-made basis, shall be maintained without interruption from the date of commencement of the Work until the date of final payment and termination of any coverage required to be maintained after final payment, and, with respect to the Contractor's completed operations coverage, until the expiration of the period for correction

AIA Document A201™ – 2007. Copyright © 1911, 1915, 1918, 1925, 1937, 1951, 1958, 1961, 1963, 1966, 1970, 1976, 1987, 1997 and 2007 by The American Institute of Architects. **All rights reserved. WARNING: This AIA® Document is protected by U.S. Copyright Law and International Treaties. Unauthorized reproduction or distribution of this AIA® Document, or any portion of it, may result in severe civil and criminal penalties, and will be prosecuted to the maximum extent possible under the law.** This draft was produced by AIA software at 12:18:39 on 08/09/2013 under Order No.4849340381_1 which expires on 02/11/2014, and is not for resale.
User Notes: (726487366)

of Work or for such other period for maintenance of completed operations coverage as specified in the Contract Documents.

§ 11.1.3 Certificates of insurance acceptable to the Owner shall be filed with the Owner prior to commencement of the Work and thereafter upon renewal or replacement of each required policy of insurance. These certificates and the insurance policies required by this Section 11.1 shall contain a provision that coverages afforded under the policies will not be canceled or allowed to expire until at least 30 days' prior written notice has been given to the Owner. An additional certificate evidencing continuation of liability coverage, including coverage for completed operations, shall be submitted with the final Application for Payment as required by Section 9.10.2 and thereafter upon renewal or replacement of such coverage until the expiration of the time required by Section 11.1.2. Information concerning reduction of coverage on account of revised limits or claims paid under the General Aggregate, or both, shall be furnished by the Contractor with reasonable promptness.

§ 11.1.4 The Contractor shall cause the commercial liability coverage required by the Contract Documents to include (1) the Owner, the Architect and the Architect's consultants as additional insureds for claims caused in whole or in part by the Contractor's negligent acts or omissions during the Contractor's operations; and (2) the Owner as an additional insured for claims caused in whole or in part by the Contractor's negligent acts or omissions during the Contractor's completed operations.

§ 11.2 OWNER'S LIABILITY INSURANCE

The Owner shall be responsible for purchasing and maintaining the Owner's usual liability insurance.

§ 11.3 PROPERTY INSURANCE

§ 11.3.1 Unless otherwise provided, the Owner shall purchase and maintain, in a company or companies lawfully authorized to do business in the jurisdiction in which the Project is located, property insurance written on a builder's risk "all-risk" or equivalent policy form in the amount of the initial Contract Sum, plus value of subsequent Contract Modifications and cost of materials supplied or installed by others, comprising total value for the entire Project at the site on a replacement cost basis without optional deductibles. Such property insurance shall be maintained, unless otherwise provided in the Contract Documents or otherwise agreed in writing by all persons and entities who are beneficiaries of such insurance, until final payment has been made as provided in Section 9.10 or until no person or entity other than the Owner has an insurable interest in the property required by this Section 11.3 to be covered, whichever is later. This insurance shall include interests of the Owner, the Contractor, Subcontractors and Sub-subcontractors in the Project.

§ 11.3.1.1 Property insurance shall be on an "all-risk" or equivalent policy form and shall include, without limitation, insurance against the perils of fire (with extended coverage) and physical loss or damage including, without duplication of coverage, theft, vandalism, malicious mischief, collapse, earthquake, flood, windstorm, falsework, testing and startup, temporary buildings and debris removal including demolition occasioned by enforcement of any applicable legal requirements, and shall cover reasonable compensation for Architect's and Contractor's services and expenses required as a result of such insured loss.

§ 11.3.1.2 If the Owner does not intend to purchase such property insurance required by the Contract and with all of the coverages in the amount described above, the Owner shall so inform the Contractor in writing prior to commencement of the Work. The Contractor may then effect insurance that will protect the interests of the Contractor, Subcontractors and Sub-subcontractors in the Work, and by appropriate Change Order the cost thereof shall be charged to the Owner. If the Contractor is damaged by the failure or neglect of the Owner to purchase or maintain insurance as described above, without so notifying the Contractor in writing, then the Owner shall bear all reasonable costs properly attributable thereto.

§ 11.3.1.3 If the property insurance requires deductibles, the Owner shall pay costs not covered because of such deductibles.

§ 11.3.1.4 This property insurance shall cover portions of the Work stored off the site, and also portions of the Work in transit.

§ 11.3.1.5 Partial occupancy or use in accordance with Section 9.9 shall not commence until the insurance company or companies providing property insurance have consented to such partial occupancy or use by endorsement or

AIA Document A201™ – 2007. Copyright © 1911, 1915, 1918, 1925, 1937, 1951, 1958, 1961, 1963, 1966, 1970, 1976, 1987, 1997 and 2007 by The American Institute of Architects. **All rights reserved. WARNING: This AIA® Document is protected by U.S. Copyright Law and International Treaties. Unauthorized reproduction or distribution of this AIA® Document, or any portion of it, may result in severe civil and criminal penalties, and will be prosecuted to the maximum extent possible under the law.** This draft was produced by AIA software at 12:18:39 on 08/09/2013 under Order No.4849340381_1 which expires on 02/11/2014, and is not for resale.
User Notes: (726487366)

otherwise. The Owner and the Contractor shall take reasonable steps to obtain consent of the insurance company or companies and shall, without mutual written consent, take no action with respect to partial occupancy or use that would cause cancellation, lapse or reduction of insurance.

§ 11.3.2 BOILER AND MACHINERY INSURANCE
The Owner shall purchase and maintain boiler and machinery insurance required by the Contract Documents or by law, which shall specifically cover such insured objects during installation and until final acceptance by the Owner; this insurance shall include interests of the Owner, Contractor, Subcontractors and Sub-subcontractors in the Work, and the Owner and Contractor shall be named insureds.

§ 11.3.3 LOSS OF USE INSURANCE
The Owner, at the Owner's option, may purchase and maintain such insurance as will insure the Owner against loss of use of the Owner's property due to fire or other hazards, however caused. The Owner waives all rights of action against the Contractor for loss of use of the Owner's property, including consequential losses due to fire or other hazards however caused.

§ 11.3.4 If the Contractor requests in writing that insurance for risks other than those described herein or other special causes of loss be included in the property insurance policy, the Owner shall, if possible, include such insurance, and the cost thereof shall be charged to the Contractor by appropriate Change Order.

§ 11.3.5 If during the Project construction period the Owner insures properties, real or personal or both, at or adjacent to the site by property insurance under policies separate from those insuring the Project, or if after final payment property insurance is to be provided on the completed Project through a policy or policies other than those insuring the Project during the construction period, the Owner shall waive all rights in accordance with the terms of Section 11.3.7 for damages caused by fire or other causes of loss covered by this separate property insurance. All separate policies shall provide this waiver of subrogation by endorsement or otherwise.

§ 11.3.6 Before an exposure to loss may occur, the Owner shall file with the Contractor a copy of each policy that includes insurance coverages required by this Section 11.3. Each policy shall contain all generally applicable conditions, definitions, exclusions and endorsements related to this Project. Each policy shall contain a provision that the policy will not be canceled or allowed to expire, and that its limits will not be reduced, until at least 30 days' prior written notice has been given to the Contractor.

§ 11.3.7 WAIVERS OF SUBROGATION
The Owner and Contractor waive all rights against (1) each other and any of their subcontractors, sub-subcontractors, agents and employees, each of the other, and (2) the Architect, Architect's consultants, separate contractors described in Article 6, if any, and any of their subcontractors, sub-subcontractors, agents and employees, for damages caused by fire or other causes of loss to the extent covered by property insurance obtained pursuant to this Section 11.3 or other property insurance applicable to the Work, except such rights as they have to proceeds of such insurance held by the Owner as fiduciary. The Owner or Contractor, as appropriate, shall require of the Architect, Architect's consultants, separate contractors described in Article 6, if any, and the subcontractors, sub-subcontractors, agents and employees of any of them, by appropriate agreements, written where legally required for validity, similar waivers each in favor of other parties enumerated herein. The policies shall provide such waivers of subrogation by endorsement or otherwise. A waiver of subrogation shall be effective as to a person or entity even though that person or entity would otherwise have a duty of indemnification, contractual or otherwise, did not pay the insurance premium directly or indirectly, and whether or not the person or entity had an insurable interest in the property damaged.

§ 11.3.8 A loss insured under the Owner's property insurance shall be adjusted by the Owner as fiduciary and made payable to the Owner as fiduciary for the insureds, as their interests may appear, subject to requirements of any applicable mortgagee clause and of Section 11.3.10. The Contractor shall pay Subcontractors their just shares of insurance proceeds received by the Contractor, and by appropriate agreements, written where legally required for validity, shall require Subcontractors to make payments to their Sub-subcontractors in similar manner.

§ 11.3.9 If required in writing by a party in interest, the Owner as fiduciary shall, upon occurrence of an insured loss, give bond for proper performance of the Owner's duties. The cost of required bonds shall be charged against proceeds received as fiduciary. The Owner shall deposit in a separate account proceeds so received, which the

AIA Document A201™ – 2007. Copyright © 1911, 1915, 1918, 1925, 1937, 1951, 1958, 1961, 1963, 1966, 1970, 1976, 1987, 1997 and 2007 by The American Institute of Architects. **All rights reserved. WARNING: This AIA® Document is protected by U.S. Copyright Law and International Treaties. Unauthorized reproduction or distribution of this AIA® Document, or any portion of it, may result in severe civil and criminal penalties, and will be prosecuted to the maximum extent possible under the law.** This draft was produced by AIA software at 12:18:39 on 08/09/2013 under Order No.4849340381_1 which expires on 02/11/2014, and is not for resale.
User Notes: (726487366)

Owner shall distribute in accordance with such agreement as the parties in interest may reach, or as determined in accordance with the method of binding dispute resolution selected in the Agreement between the Owner and Contractor. If after such loss no other special agreement is made and unless the Owner terminates the Contract for convenience, replacement of damaged property shall be performed by the Contractor after notification of a Change in the Work in accordance with Article 7.

§ 11.3.10 The Owner as fiduciary shall have power to adjust and settle a loss with insurers unless one of the parties in interest shall object in writing within five days after occurrence of loss to the Owner's exercise of this power; if such objection is made, the dispute shall be resolved in the manner selected by the Owner and Contractor as the method of binding dispute resolution in the Agreement. If the Owner and Contractor have selected arbitration as the method of binding dispute resolution, the Owner as fiduciary shall make settlement with insurers or, in the case of a dispute over distribution of insurance proceeds, in accordance with the directions of the arbitrators.

§ 11.4 PERFORMANCE BOND AND PAYMENT BOND

§ 11.4.1 The Owner shall have the right to require the Contractor to furnish bonds covering faithful performance of the Contract and payment of obligations arising thereunder as stipulated in bidding requirements or specifically required in the Contract Documents on the date of execution of the Contract.

§ 11.4.2 Upon the request of any person or entity appearing to be a potential beneficiary of bonds covering payment of obligations arising under the Contract, the Contractor shall promptly furnish a copy of the bonds or shall authorize a copy to be furnished.

ARTICLE 12 UNCOVERING AND CORRECTION OF WORK

§ 12.1 UNCOVERING OF WORK

§ 12.1.1 If a portion of the Work is covered contrary to the Architect's request or to requirements specifically expressed in the Contract Documents, it must, if requested in writing by the Architect, be uncovered for the Architect's examination and be replaced at the Contractor's expense without change in the Contract Time.

§ 12.1.2 If a portion of the Work has been covered that the Architect has not specifically requested to examine prior to its being covered, the Architect may request to see such Work and it shall be uncovered by the Contractor. If such Work is in accordance with the Contract Documents, costs of uncovering and replacement shall, by appropriate Change Order, be at the Owner's expense. If such Work is not in accordance with the Contract Documents, such costs and the cost of correction shall be at the Contractor's expense unless the condition was caused by the Owner or a separate contractor in which event the Owner shall be responsible for payment of such costs.

§ 12.2 CORRECTION OF WORK

§ 12.2.1 BEFORE OR AFTER SUBSTANTIAL COMPLETION

The Contractor shall promptly correct Work rejected by the Architect or failing to conform to the requirements of the Contract Documents, whether discovered before or after Substantial Completion and whether or not fabricated, installed or completed. Costs of correcting such rejected Work, including additional testing and inspections, the cost of uncovering and replacement, and compensation for the Architect's services and expenses made necessary thereby, shall be at the Contractor's expense.

§ 12.2.2 AFTER SUBSTANTIAL COMPLETION

§ 12.2.2.1 In addition to the Contractor's obligations under Section 3.5, if, within one year after the date of Substantial Completion of the Work or designated portion thereof or after the date for commencement of warranties established under Section 9.9.1, or by terms of an applicable special warranty required by the Contract Documents, any of the Work is found to be not in accordance with the requirements of the Contract Documents, the Contractor shall correct it promptly after receipt of written notice from the Owner to do so unless the Owner has previously given the Contractor a written acceptance of such condition. The Owner shall give such notice promptly after discovery of the condition. During the one-year period for correction of Work, if the Owner fails to notify the Contractor and give the Contractor an opportunity to make the correction, the Owner waives the rights to require correction by the Contractor and to make a claim for breach of warranty. If the Contractor fails to correct nonconforming Work within a reasonable time during that period after receipt of notice from the Owner or Architect, the Owner may correct it in accordance with Section 2.4.

AIA Document A201™ – 2007. Copyright © 1911, 1915, 1918, 1925, 1937, 1951, 1958, 1961, 1963, 1966, 1970, 1976, 1987, 1997 and 2007 by The American Institute of Architects. **All rights reserved. WARNING: This AIA® Document is protected by U.S. Copyright Law and International Treaties. Unauthorized reproduction or distribution of this AIA® Document, or any portion of it, may result in severe civil and criminal penalties, and will be prosecuted to the maximum extent possible under the law.** This draft was produced by AIA software at 12:18:39 on 08/09/2013 under Order No.4849340381_1 which expires on 02/11/2014, and is not for resale.
User Notes: (726487366)

§ 12.2.2.2 The one-year period for correction of Work shall be extended with respect to portions of Work first performed after Substantial Completion by the period of time between Substantial Completion and the actual completion of that portion of the Work.

§ 12.2.2.3 The one-year period for correction of Work shall not be extended by corrective Work performed by the Contractor pursuant to this Section 12.2.

§ 12.2.3 The Contractor shall remove from the site portions of the Work that are not in accordance with the requirements of the Contract Documents and are neither corrected by the Contractor nor accepted by the Owner.

§ 12.2.4 The Contractor shall bear the cost of correcting destroyed or damaged construction, whether completed or partially completed, of the Owner or separate contractors caused by the Contractor's correction or removal of Work that is not in accordance with the requirements of the Contract Documents.

§ 12.2.5 Nothing contained in this Section 12.2 shall be construed to establish a period of limitation with respect to other obligations the Contractor has under the Contract Documents. Establishment of the one-year period for correction of Work as described in Section 12.2.2 relates only to the specific obligation of the Contractor to correct the Work, and has no relationship to the time within which the obligation to comply with the Contract Documents may be sought to be enforced, nor to the time within which proceedings may be commenced to establish the Contractor's liability with respect to the Contractor's obligations other than specifically to correct the Work.

§ 12.3 ACCEPTANCE OF NONCONFORMING WORK

If the Owner prefers to accept Work that is not in accordance with the requirements of the Contract Documents, the Owner may do so instead of requiring its removal and correction, in which case the Contract Sum will be reduced as appropriate and equitable. Such adjustment shall be effected whether or not final payment has been made.

ARTICLE 13 MISCELLANEOUS PROVISIONS

§ 13.1 GOVERNING LAW

The Contract shall be governed by the law of the place where the Project is located except that, if the parties have selected arbitration as the method of binding dispute resolution, the Federal Arbitration Act shall govern Section 15.4.

§ 13.2 SUCCESSORS AND ASSIGNS

§ 13.2.1 The Owner and Contractor respectively bind themselves, their partners, successors, assigns and legal representatives to covenants, agreements and obligations contained in the Contract Documents. Except as provided in Section 13.2.2, neither party to the Contract shall assign the Contract as a whole without written consent of the other. If either party attempts to make such an assignment without such consent, that party shall nevertheless remain legally responsible for all obligations under the Contract.

§ 13.2.2 The Owner may, without consent of the Contractor, assign the Contract to a lender providing construction financing for the Project, if the lender assumes the Owner's rights and obligations under the Contract Documents. The Contractor shall execute all consents reasonably required to facilitate such assignment.

§ 13.3 WRITTEN NOTICE

Written notice shall be deemed to have been duly served if delivered in person to the individual, to a member of the firm or entity, or to an officer of the corporation for which it was intended; or if delivered at, or sent by registered or certified mail or by courier service providing proof of delivery to, the last business address known to the party giving notice.

§ 13.4 RIGHTS AND REMEDIES

§ 13.4.1 Duties and obligations imposed by the Contract Documents and rights and remedies available thereunder shall be in addition to and not a limitation of duties, obligations, rights and remedies otherwise imposed or available by law.

§ 13.4.2 No action or failure to act by the Owner, Architect or Contractor shall constitute a waiver of a right or duty afforded them under the Contract, nor shall such action or failure to act constitute approval of or acquiescence in a breach there under, except as may be specifically agreed in writing.

AIA Document A201™ – 2007. Copyright © 1911, 1915, 1918, 1925, 1937, 1951, 1958, 1961, 1963, 1966, 1970, 1976, 1987, 1997 and 2007 by The American Institute of Architects. **All rights reserved. WARNING: This AIA® Document is protected by U.S. Copyright Law and International Treaties. Unauthorized reproduction or distribution of this AIA® Document, or any portion of it, may result in severe civil and criminal penalties, and will be prosecuted to the maximum extent possible under the law.** This draft was produced by AIA software at 12:18:39 on 08/09/2013 under Order No.4849340381_1 which expires on 02/11/2014, and is not for resale.
User Notes: (726487366)

§ 13.5 TESTS AND INSPECTIONS

§ 13.5.1 Tests, inspections and approvals of portions of the Work shall be made as required by the Contract Documents and by applicable laws, statutes, ordinances, codes, rules and regulations or lawful orders of public authorities. Unless otherwise provided, the Contractor shall make arrangements for such tests, inspections and approvals with an independent testing laboratory or entity acceptable to the Owner, or with the appropriate public authority, and shall bear all related costs of tests, inspections and approvals. The Contractor shall give the Architect timely notice of when and where tests and inspections are to be made so that the Architect may be present for such procedures. The Owner shall bear costs of (1) tests, inspections or approvals that do not become requirements until after bids are received or negotiations concluded, and (2) tests, inspections or approvals where building codes or applicable laws or regulations prohibit the Owner from delegating their cost to the Contractor.

§ 13.5.2 If the Architect, Owner or public authorities having jurisdiction determine that portions of the Work require additional testing, inspection or approval not included under Section 13.5.1, the Architect will, upon written authorization from the Owner, instruct the Contractor to make arrangements for such additional testing, inspection or approval by an entity acceptable to the Owner, and the Contractor shall give timely notice to the Architect of when and where tests and inspections are to be made so that the Architect may be present for such procedures. Such costs, except as provided in Section 13.5.3, shall be at the Owner's expense.

§ 13.5.3 If such procedures for testing, inspection or approval under Sections 13.5.1 and 13.5.2 reveal failure of the portions of the Work to comply with requirements established by the Contract Documents, all costs made necessary by such failure including those of repeated procedures and compensation for the Architect's services and expenses shall be at the Contractor's expense.

§ 13.5.4 Required certificates of testing, inspection or approval shall, unless otherwise required by the Contract Documents, be secured by the Contractor and promptly delivered to the Architect.

§ 13.5.5 If the Architect is to observe tests, inspections or approvals required by the Contract Documents, the Architect will do so promptly and, where practicable, at the normal place of testing.

§ 13.5.6 Tests or inspections conducted pursuant to the Contract Documents shall be made promptly to avoid unreasonable delay in the Work.

§ 13.6 INTEREST

Payments due and unpaid under the Contract Documents shall bear interest from the date payment is due at such rate as the parties may agree upon in writing or, in the absence thereof, at the legal rate prevailing from time to time at the place where the Project is located.

§ 13.7 TIME LIMITS ON CLAIMS

The Owner and Contractor shall commence all claims and causes of action, whether in contract, tort, breach of warranty or otherwise, against the other arising out of or related to the Contract in accordance with the requirements of the final dispute resolution method selected in the Agreement within the time period specified by applicable law, but in any case not more than 10 years after the date of Substantial Completion of the Work. The Owner and Contractor waive all claims and causes of action not commenced in accordance with this Section 13.7.

ARTICLE 14 TERMINATION OR SUSPENSION OF THE CONTRACT

§ 14.1 TERMINATION BY THE CONTRACTOR

§ 14.1.1 The Contractor may terminate the Contract if the Work is stopped for a period of 30 consecutive days through no act or fault of the Contractor or a Subcontractor, Sub-subcontractor or their agents or employees or any other persons or entities performing portions of the Work under direct or indirect contract with the Contractor, for any of the following reasons:

- **.1** Issuance of an order of a court or other public authority having jurisdiction that requires all Work to be stopped;
- **.2** An act of government, such as a declaration of national emergency that requires all Work to be stopped;

AIA Document A201™ – 2007. Copyright © 1911, 1915, 1918, 1925, 1937, 1951, 1958, 1961, 1963, 1966, 1970, 1976, 1987, 1997 and 2007 by The American Institute of Architects. **All rights reserved. WARNING: This AIA® Document is protected by U.S. Copyright Law and International Treaties. Unauthorized reproduction or distribution of this AIA® Document, or any portion of it, may result in severe civil and criminal penalties, and will be prosecuted to the maximum extent possible under the law.** This draft was produced by AIA software at 12:18:39 on 08/09/2013 under Order No.4849340381_1 which expires on 02/11/2014, and is not for resale.
User Notes: (726487366)

.3 Because the Architect has not issued a Certificate for Payment and has not notified the Contractor of the reason for withholding certification as provided in Section 9.4.1, or because the Owner has not made payment on a Certificate for Payment within the time stated in the Contract Documents; or

.4 The Owner has failed to furnish to the Contractor promptly, upon the Contractor's request, reasonable evidence as required by Section 2.2.1.

§ 14.1.2 The Contractor may terminate the Contract if, through no act or fault of the Contractor or a Subcontractor, Sub-subcontractor or their agents or employees or any other persons or entities performing portions of the Work under direct or indirect contract with the Contractor, repeated suspensions, delays or interruptions of the entire Work by the Owner as described in Section 14.3 constitute in the aggregate more than 100 percent of the total number of days scheduled for completion, or 120 days in any 365-day period, whichever is less.

§ 14.1.3 If one of the reasons described in Section 14.1.1 or 14.1.2 exists, the Contractor may, upon seven days' written notice to the Owner and Architect, terminate the Contract and recover from the Owner payment for Work executed, including reasonable overhead and profit, costs incurred by reason of such termination, and damages.

§ 14.1.4 If the Work is stopped for a period of 60 consecutive days through no act or fault of the Contractor or a Subcontractor or their agents or employees or any other persons performing portions of the Work under contract with the Contractor because the Owner has repeatedly failed to fulfill the Owner's obligations under the Contract Documents with respect to matters important to the progress of the Work, the Contractor may, upon seven additional days' written notice to the Owner and the Architect, terminate the Contract and recover from the Owner as provided in Section 14.1.3.

§ 14.2 TERMINATION BY THE OWNER FOR CAUSE

§ 14.2.1 The Owner may terminate the Contract if the Contractor

.1 repeatedly refuses or fails to supply enough properly skilled workers or proper materials;

.2 fails to make payment to Subcontractors for materials or labor in accordance with the respective agreements between the Contractor and the Subcontractors;

.3 repeatedly disregards applicable laws, statutes, ordinances, codes, rules and regulations, or lawful orders of a public authority; or

.4 otherwise is guilty of substantial breach of a provision of the Contract Documents.

§ 14.2.2 When any of the above reasons exist, the Owner, upon certification by the Initial Decision Maker that sufficient cause exists to justify such action, may without prejudice to any other rights or remedies of the Owner and after giving the Contractor and the Contractor's surety, if any, seven days' written notice, terminate employment of the Contractor and may, subject to any prior rights of the surety:

.1 Exclude the Contractor from the site and take possession of all materials, equipment, tools, and construction equipment and machinery thereon owned by the Contractor;

.2 Accept assignment of subcontracts pursuant to Section 5.4; and

.3 Finish the Work by whatever reasonable method the Owner may deem expedient. Upon written request of the Contractor, the Owner shall furnish to the Contractor a detailed accounting of the costs incurred by the Owner in finishing the Work.

§ 14.2.3 When the Owner terminates the Contract for one of the reasons stated in Section 14.2.1, the Contractor shall not be entitled to receive further payment until the Work is finished.

§ 14.2.4 If the unpaid balance of the Contract Sum exceeds costs of finishing the Work, including compensation for the Architect's services and expenses made necessary thereby, and other damages incurred by the Owner and not expressly waived, such excess shall be paid to the Contractor. If such costs and damages exceed the unpaid balance, the Contractor shall pay the difference to the Owner. The amount to be paid to the Contractor or Owner, as the case may be, shall be certified by the Initial Decision Maker, upon application, and this obligation for payment shall survive termination of the Contract.

§ 14.3 SUSPENSION BY THE OWNER FOR CONVENIENCE

§ 14.3.1 The Owner may, without cause, order the Contractor in writing to suspend, delay or interrupt the Work in whole or in part for such period of time as the Owner may determine.

AIA Document A201™ – 2007. Copyright © 1911, 1915, 1918, 1925, 1937, 1951, 1958, 1961, 1963, 1966, 1970, 1976, 1987, 1997 and 2007 by The American Institute of Architects. **All rights reserved. WARNING: This AIA® Document is protected by U.S. Copyright Law and International Treaties. Unauthorized reproduction or distribution of this AIA® Document, or any portion of it, may result in severe civil and criminal penalties, and will be prosecuted to the maximum extent possible under the law.** This draft was produced by AIA software at 12:18:39 on 08/09/2013 under Order No.4849340381_1 which expires on 02/11/2014, and is not for resale.
User Notes: (726487366)

§ 14.3.2 The Contract Sum and Contract Time shall be adjusted for increases in the cost and time caused by suspension, delay or interruption as described in Section 14.3.1. Adjustment of the Contract Sum shall include profit. No adjustment shall be made to the extent

- **.1** that performance is, was or would have been so suspended, delayed or interrupted by another cause for which the Contractor is responsible; or
- **.2** that an equitable adjustment is made or denied under another provision of the Contract.

§ 14.4 TERMINATION BY THE OWNER FOR CONVENIENCE

§ 14.4.1 The Owner may, at any time, terminate the Contract for the Owner's convenience and without cause.

§ 14.4.2 Upon receipt of written notice from the Owner of such termination for the Owner's convenience, the Contractor shall

- **.1** cease operations as directed by the Owner in the notice;
- **.2** take actions necessary, or that the Owner may direct, for the protection and preservation of the Work; and
- **.3** except for Work directed to be performed prior to the effective date of termination stated in the notice, terminate all existing subcontracts and purchase orders and enter into no further subcontracts and purchase orders.

§ 14.4.3 In case of such termination for the Owner's convenience, the Contractor shall be entitled to receive payment for Work executed, and costs incurred by reason of such termination, along with reasonable overhead and profit on the Work not executed.

ARTICLE 15 CLAIMS AND DISPUTES

§ 15.1 CLAIMS

§ 15.1.1 DEFINITION

A Claim is a demand or assertion by one of the parties seeking, as a matter of right, payment of money, or other relief with respect to the terms of the Contract. The term "Claim" also includes other disputes and matters in question between the Owner and Contractor arising out of or relating to the Contract. The responsibility to substantiate Claims shall rest with the party making the Claim.

§ 15.1.2 NOTICE OF CLAIMS

Claims by either the Owner or Contractor must be initiated by written notice to the other party and to the Initial Decision Maker with a copy sent to the Architect, if the Architect is not serving as the Initial Decision Maker. Claims by either party must be initiated within 21 days after occurrence of the event giving rise to such Claim or within 21 days after the claimant first recognizes the condition giving rise to the Claim, whichever is later.

§ 15.1.3 CONTINUING CONTRACT PERFORMANCE

Pending final resolution of a Claim, except as otherwise agreed in writing or as provided in Section 9.7 and Article 14, the Contractor shall proceed diligently with performance of the Contract and the Owner shall continue to make payments in accordance with the Contract Documents. The Architect will prepare Change Orders and issue Certificates for Payment in accordance with the decisions of the Initial Decision Maker.

§ 15.1.4 CLAIMS FOR ADDITIONAL COST

If the Contractor wishes to make a Claim for an increase in the Contract Sum, written notice as provided herein shall be given before proceeding to execute the Work. Prior notice is not required for Claims relating to an emergency endangering life or property arising under Section 10.4.

§ 15.1.5 CLAIMS FOR ADDITIONAL TIME

§ 15.1.5.1 If the Contractor wishes to make a Claim for an increase in the Contract Time, written notice as provided herein shall be given. The Contractor's Claim shall include an estimate of cost and of probable effect of delay on progress of the Work. In the case of a continuing delay, only one Claim is necessary.

§ 15.1.5.2 If adverse weather conditions are the basis for a Claim for additional time, such Claim shall be documented by data substantiating that weather conditions were abnormal for the period of time, could not have been reasonably anticipated and had an adverse effect on the scheduled construction.

AIA Document A201™ – 2007. Copyright © 1911, 1915, 1918, 1925, 1937, 1951, 1958, 1961, 1963, 1966, 1970, 1976, 1987, 1997 and 2007 by The American Institute of Architects. **All rights reserved. WARNING: This AIA® Document is protected by U.S. Copyright Law and International Treaties. Unauthorized reproduction or distribution of this AIA® Document, or any portion of it, may result in severe civil and criminal penalties, and will be prosecuted to the maximum extent possible under the law.** This draft was produced by AIA software at 12:18:39 on 08/09/2013 under Order No.4849340381_1 which expires on 02/11/2014, and is not for resale.
User Notes: (726487366)

§ 15.1.6 CLAIMS FOR CONSEQUENTIAL DAMAGES
The Contractor and Owner waive Claims against each other for consequential damages arising out of or relating to this Contract. This mutual waiver includes

- **.1** damages incurred by the Owner for rental expenses, for losses of use, income, profit, financing, business and reputation, and for loss of management or employee productivity or of the services of such persons; and
- **.2** damages incurred by the Contractor for principal office expenses including the compensation of personnel stationed there, for losses of financing, business and reputation, and for loss of profit except anticipated profit arising directly from the Work.

This mutual waiver is applicable, without limitation, to all consequential damages due to either party's termination in accordance with Article 14. Nothing contained in this Section 15.1.6 shall be deemed to preclude an award of liquidated damages, when applicable, in accordance with the requirements of the Contract Documents.

§ 15.2 INITIAL DECISION
§ 15.2.1 Claims, excluding those arising under Sections 10.3, 10.4, 11.3.9, and 11.3.10, shall be referred to the Initial Decision Maker for initial decision. The Architect will serve as the Initial Decision Maker, unless otherwise indicated in the Agreement. Except for those Claims excluded by this Section 15.2.1, an initial decision shall be required as a condition precedent to mediation of any Claim arising prior to the date final payment is due, unless 30 days have passed after the Claim has been referred to the Initial Decision Maker with no decision having been rendered. Unless the Initial Decision Maker and all affected parties agree, the Initial Decision Maker will not decide disputes between the Contractor and persons or entities other than the Owner.

§ 15.2.2 The Initial Decision Maker will review Claims and within ten days of the receipt of a Claim take one or more of the following actions: (1) request additional supporting data from the claimant or a response with supporting data from the other party, (2) reject the Claim in whole or in part, (3) approve the Claim, (4) suggest a compromise, or (5) advise the parties that the Initial Decision Maker is unable to resolve the Claim if the Initial Decision Maker lacks sufficient information to evaluate the merits of the Claim or if the Initial Decision Maker concludes that, in the Initial Decision Maker's sole discretion, it would be inappropriate for the Initial Decision Maker to resolve the Claim.

§ 15.2.3 In evaluating Claims, the Initial Decision Maker may, but shall not be obligated to, consult with or seek information from either party or from persons with special knowledge or expertise who may assist the Initial Decision Maker in rendering a decision. The Initial Decision Maker may request the Owner to authorize retention of such persons at the Owner's expense.

§ 15.2.4 If the Initial Decision Maker requests a party to provide a response to a Claim or to furnish additional supporting data, such party shall respond, within ten days after receipt of such request, and shall either (1) provide a response on the requested supporting data, (2) advise the Initial Decision Maker when the response or supporting data will be furnished or (3) advise the Initial Decision Maker that no supporting data will be furnished. Upon receipt of the response or supporting data, if any, the Initial Decision Maker will either reject or approve the Claim in whole or in part.

§ 15.2.5 The Initial Decision Maker will render an initial decision approving or rejecting the Claim, or indicating that the Initial Decision Maker is unable to resolve the Claim. This initial decision shall (1) be in writing; (2) state the reasons therefor; and (3) notify the parties and the Architect, if the Architect is not serving as the Initial Decision Maker, of any change in the Contract Sum or Contract Time or both. The initial decision shall be final and binding on the parties but subject to mediation and, if the parties fail to resolve their dispute through mediation, to binding dispute resolution.

§ 15.2.6 Either party may file for mediation of an initial decision at any time, subject to the terms of Section 15.2.6.1.

§ 15.2.6.1 Either party may, within 30 days from the date of an initial decision, demand in writing that the other party file for mediation within 60 days of the initial decision. If such a demand is made and the party receiving the demand fails to file for mediation within the time required, then both parties waive their rights to mediate or pursue binding dispute resolution proceedings with respect to the initial decision.

AIA Document A201™ – 2007. Copyright © 1911, 1915, 1918, 1925, 1937, 1951, 1958, 1961, 1963, 1966, 1970, 1976, 1987, 1997 and 2007 by The American Institute of Architects. **All rights reserved. WARNING: This AIA® Document is protected by U.S. Copyright Law and International Treaties. Unauthorized reproduction or distribution of this AIA® Document, or any portion of it, may result in severe civil and criminal penalties, and will be prosecuted to the maximum extent possible under the law.** This draft was produced by AIA software at 12:18:39 on 08/09/2013 under Order No.4849340381_1 which expires on 02/11/2014, and is not for resale.
User Notes: (726487366)

§ 15.2.7 In the event of a Claim against the Contractor, the Owner may, but is not obligated to, notify the surety, if any, of the nature and amount of the Claim. If the Claim relates to a possibility of a Contractor's default, the Owner may, but is not obligated to, notify the surety and request the surety's assistance in resolving the controversy.

§ 15.2.8 If a Claim relates to or is the subject of a mechanic's lien, the party asserting such Claim may proceed in accordance with applicable law to comply with the lien notice or filing deadlines.

§ 15.3 MEDIATION

§ 15.3.1 Claims, disputes, or other matters in controversy arising out of or related to the Contract except those waived as provided for in Sections 9.10.4, 9.10.5, and 15.1.6 shall be subject to mediation as a condition precedent to binding dispute resolution.

§ 15.3.2 The parties shall endeavor to resolve their Claims by mediation which, unless the parties mutually agree otherwise, shall be administered by the American Arbitration Association in accordance with its Construction Industry Mediation Procedures in effect on the date of the Agreement. A request for mediation shall be made in writing, delivered to the other party to the Contract, and filed with the person or entity administering the mediation. The request may be made concurrently with the filing of binding dispute resolution proceedings but, in such event, mediation shall proceed in advance of binding dispute resolution proceedings, which shall be stayed pending mediation for a period of 60 days from the date of filing, unless stayed for a longer period by agreement of the parties or court order. If an arbitration is stayed pursuant to this Section 15.3.2, the parties may nonetheless proceed to the selection of the arbitrator(s) and agree upon a schedule for later proceedings.

§ 15.3.3 The parties shall share the mediator's fee and any filing fees equally. The mediation shall be held in the place where the Project is located, unless another location is mutually agreed upon. Agreements reached in mediation shall be enforceable as settlement agreements in any court having jurisdiction thereof.

§ 15.4 ARBITRATION

§ 15.4.1 If the parties have selected arbitration as the method for binding dispute resolution in the Agreement, any Claim subject to, but not resolved by, mediation shall be subject to arbitration which, unless the parties mutually agree otherwise, shall be administered by the American Arbitration Association in accordance with its Construction Industry Arbitration Rules in effect on the date of the Agreement. A demand for arbitration shall be made in writing, delivered to the other party to the Contract, and filed with the person or entity administering the arbitration. The party filing a notice of demand for arbitration must assert in the demand all Claims then known to that party on which arbitration is permitted to be demanded.

§ 15.4.1.1 A demand for arbitration shall be made no earlier than concurrently with the filing of a request for mediation, but in no event shall it be made after the date when the institution of legal or equitable proceedings based on the Claim would be barred by the applicable statute of limitations. For statute of limitations purposes, receipt of a written demand for arbitration by the person or entity administering the arbitration shall constitute the institution of legal or equitable proceedings based on the Claim.

§ 15.4.2 The award rendered by the arbitrator or arbitrators shall be final, and judgment may be entered upon it in accordance with applicable law in any court having jurisdiction thereof.

§ 15.4.3 The foregoing agreement to arbitrate and other agreements to arbitrate with an additional person or entity duly consented to by parties to the Agreement shall be specifically enforceable under applicable law in any court having jurisdiction thereof.

§ 15.4.4 CONSOLIDATION OR JOINDER

§ 15.4.4.1 Either party, at its sole discretion, may consolidate an arbitration conducted under this Agreement with any other arbitration to which it is a party provided that (1) the arbitration agreement governing the other arbitration permits consolidation, (2) the arbitrations to be consolidated substantially involve common questions of law or fact, and (3) the arbitrations employ materially similar procedural rules and methods for selecting arbitrator(s).

§ 15.4.4.2 Either party, at its sole discretion, may include by joinder persons or entities substantially involved in a common question of law or fact whose presence is required if complete relief is to be accorded in arbitration, provided that the party sought to be joined consents in writing to such joinder. Consent to arbitration involving an

AIA Document A201™ – 2007. Copyright © 1911, 1915, 1918, 1925, 1937, 1951, 1958, 1961, 1963, 1966, 1970, 1976, 1987, 1997 and 2007 by The American Institute of Architects. **All rights reserved. WARNING: This AIA® Document is protected by U.S. Copyright Law and International Treaties. Unauthorized reproduction or distribution of this AIA® Document, or any portion of it, may result in severe civil and criminal penalties, and will be prosecuted to the maximum extent possible under the law.** This draft was produced by AIA software at 12:18:39 on 08/09/2013 under Order No.4849340381_1 which expires on 02/11/2014, and is not for resale.
User Notes: (726487366)

additional person or entity shall not constitute consent to arbitration of any claim, dispute or other matter in question not described in the written consent.

§ 15.4.4.3 The Owner and Contractor grant to any person or entity made a party to an arbitration conducted under this Section 15.4, whether by joinder or consolidation, the same rights of joinder and consolidation as the Owner and Contractor under this Agreement.

DRAFT

AIA Document A201™ – 2007. Copyright © 1911, 1915, 1918, 1925, 1937, 1951, 1958, 1961, 1963, 1966, 1970, 1976, 1987, 1997 and 2007 by The American Institute of Architects. **All rights reserved. WARNING: This AIA® Document is protected by U.S. Copyright Law and International Treaties. Unauthorized reproduction or distribution of this AIA® Document, or any portion of it, may result in severe civil and criminal penalties, and will be prosecuted to the maximum extent possible under the law.** This draft was produced by AIA software at 12:18:39 on 08/09/2013 under Order No.4849340381_1 which expires on 02/11/2014, and is not for resale.
User Notes: (726487366)

SECTION 008000 - SUPPLEMENTARY CONDITIONS

A. INTRODUCTION

The following supplements modify the "General Conditions of the Contract for Construction", AIA Document A201-2007. Where a portion of the General Conditions is modified or deleted by the Supplementary Conditions, the unaltered portions shall remain in effect.

B. OTHER CONDITIONS

Should additional conditions be required for the work of this Project, they shall be included in that portion of this Project Manual directly following these Supplementary Conditions; and with their inclusion become a part of the Contract for this work.

C. REFERENCE TO DIVISION 1

Where provisions of the General Conditions relate to project administrative or work-related requirements of the Contract, those paragraphs are deleted from General Conditions, and are specified in Division 1, "General Requirements" of the Specifications. The deleted paragraphs are:

3.4	3.8	3.12	3.15
3.6	3.10	3.13	9.2
3.7	3.11	3.14	

ARTICLE 1 - GENERAL PROVISIONS

Add the following sub-paragraphs to 1.1:

1.1.9 Miscellaneous Definitions.

1.1.9.1 The term "product" includes materials, systems and equipment.

1.1.9.2 Where "as shown", "as indicated", "as detailed", or words of similar import are used, it shall be understood that references to the drawings accompanying this specification is made, unless otherwise stated. Where "as directed", "as required", "as permitted", "approved", "acceptance", or words of similar import are used, it shall be understood that the direction, requirement, permission, approval or acceptance of the Architect is intended, unless stated otherwise. As used herein, "provide" shall be understood to mean "provide complete in place" that is, "furnish and install".

Add the following Paragraph 1.7:

1.7 AVAILABILITY OF CADD DRAWING FILES

1.7.1 After award and upon request, the electronic "Computer-Aided Drafting and Design (CADD)" drawing files will be made available to the Contractor for his/her/their use in preparation of his/her/their construction coordination and shop drawings related to the referenced contract, and subject to the following terms and conditions. Coordinate with Section 013000 - SUBMITTALS of the Project Manual. The disk(s) may contain information submitted, in part, by others. While this information is believed to be reliable, there may be occasional inconsistencies due to the transfer of electronic data from our master file to the disk(s), as well as in the transfer of disk data to your system. Thus, RGB is not responsible for its accuracy, or for errors or omissions, which may have been incorporated into the resultant documents, nor does it make any warranties, expressed or implied, of merchantability or for fitness for a particular purpose.

Files will be made available on CD-ROM, only. No documents will be e-mailed.

© THE ROBINSON GREEN BERETTA CORPORATION - 6060-9007

Data contained on these electronic files shall not be used for any purpose other than as a convenience in coordination of the work and the preparation of the shop drawings for the referenced project.
Any other use, without the express written permission of the Architect, shall be at the sole risk of the Contractor and without liability or legal exposure to the Architect.

The Contractor shall make no claim and waives to the fullest extent permitted by law, any claim or cause of action of any nature against the Architect, its agents or sub consultants that may arise out of, or in connection with, the Contractor's or his agent's use of these electronic files. By opening the files, the Contractor shall, to the fullest extent permitted by law, agrees to fully indemnify and hold the Architect and his consultants harmless against all damages, liabilities or costs, including reasonable attorney's fees and defense costs, arising out of or resulting from the use of these electronic files.

These electronic CADD drawing files are not construction documents. Differences may exist between the CADD files and the corresponding construction documents. The Architect makes no representation regarding the accuracy or completeness of the electronic CADD files, nor does it make representation to the compatibility of these files with the Contractors hardware or software.

In the event that a conflict arises between the signed and sealed construction documents prepared by the Architect and the furnished CADD files, the signed and sealed construction documents shall govern.
The Contractor is responsible for determining if any conflict exists. Use of these CADD files does not relieve the Contractor of his contractual obligations and requirement to fully comply with all the contract documents, including and without limitation, the need to check, confirm and coordinate the work of all contractors, suppliers, and agents for the project.

If the Contractor uses, duplicates and/or modifies these electronic CADD files for use in producing shop drawings, coordination drawings, and data related to this contract, all previous indication of ownership (seals, logos, signatures, initials, and dates) shall be removed.

ARTICLE 2 - OWNER

2.2 Information and Services Required of the Owner.

2.2.5 Change to read:

"Prior to the start of construction, the Contractor will be furnished, free of charge, 10 sets of Drawings and 10 Project Manuals, complete with Addendum, for his use in the execution of the Contract. Additional sets as may be required, by the Contractor, shall be furnished to the Contractor, by the Owner, upon payment by the Contractor of actual printing costs. The Contractor shall utilize one of these sets for the sole purpose of maintaining "record documents".

ARTICLE 3 - CONTRACTOR

Add the following sub-paragraphs to 3.2:

3.2.5 In case of an inconsistency between Drawings and Specifications or within either Document not clarified by addendum, provide the better quality or greater quantity of Work in accordance with the Architect's interpretation.

3.2.6 Omissions from the drawings and specifications of items obviously needed to perform the work, such as attachments, bolts, hangers, and other fastening devices shall not relieve the Contractor from furnishing and installing same. It shall be the duty of the Contractor to procure from the Architect all necessary interpretations of the designs, drawings and specifications.

3.4 Delete Paragraph 3.4, LABOR AND MATERIALS, in its entirety.

© THE ROBINSON GREEN BERETTA CORPORATION - 6060-9007

Refer to Specification Section entitled, SUMMARY OF THE WORK, for provisions on the subject. References to Section 3.4 elsewhere in the Contract Documents shall read as referring to that Section of the Specifications.

3.6 Delete Paragraph 3.6, TAXES, in its entirety.
Refer to Specification Section entitled, SUMMARY OF THE WORK, for provisions on the subject. References to Section 3.6 elsewhere in the Contract Documents shall read as referring to that Section of the Specifications.

3.7 Delete Paragraph 3.7, PERMITS, FEES AND NOTICES, in its entirety.
Refer to Specification Section entitled, SUMMARY OF THE WORK, for provisions on the subject. References to Section 3.7 elsewhere in the Contract Documents shall read as referring to that Section of the Specifications.

3.8 Delete Paragraph 3.8, ALLOWANCES, in its entirety.
Refer to Specification Section entitled, ALLOWANCES, for provisions on the subject. References to Section 3.8 elsewhere in the Contract Documents shall read as referring to that Section of the Specifications.

3.9 Add the following sub-paragraph to 3.9.2

3.9.2.1Employ a project superintendent acceptable to the Owner and Architect. Prior to the assignment or replacement of a superintendent, submit a resume to the Architect for acceptance review.

3.10 Delete Paragraph 3.10, CONTRACTOR'S CONSTRUCTION SCHEDULES, in its entirety.
Refer to Specification Section entitled, SUBMITTALS, for provisions on the subject. References to Section 3.10 elsewhere in the Contract Documents shall read as referring to that Section of the Specifications.

3.11 Delete Paragraph 3.11, DOCUMENTS AND SAMPLES AT THE SITE, in its entirety.
Refer to Specification Section entitled, SUMMARY OF THE WORK, for provisions on the subject. References to Section 3.11 elsewhere in the Contract Documents shall read as referring to that Section of the Specifications.

3.12 Delete Paragraph 3.12, SHOP DRAWINGS, PRODUCT DATA AND SAMPLES, in its entirety.
Refer to Specification Section entitled, SUBMITTALS, for provisions on the subject. References to Section 3.12 elsewhere in the Contract Documents shall read as referring to that Section of the Specifications.

3.13 Delete Paragraph 3.13, USE OF SITE, in its entirety.
Refer to Specification Section entitled, SUMMARY OF THE WORK, for provisions on the subject. References to Section 3.13 elsewhere in the Contract Documents shall read as referring to that Section of the Specifications.

3.14 Delete Paragraph 3.14, CUTTING AND PATCHING, in its entirety.
Refer to Specification Section entitled, SUMMARY OF THE WORK, for provisions on the subject. References to Section 3.14 elsewhere in the Contract Documents shall read as referring to that Section of the Specifications.

3.15 Delete Paragraph 3.15, CLEANING UP, in its entirety.
Refer to Specification Section entitled, CONTRACT CLOSEOUT, for provisions on the subject. References to Section 3.15 elsewhere in the Contract Documents shall read as referring to that Section of the Specifications.

ARTICLE 7 - CHANGES IN THE WORK

© THE ROBINSON GREEN BERETTA CORPORATION - 6060-9007

7.1 Changes.
Add new sub-paragraphs:

7.1.4 The amount of credit to be allowed by the Contractor to the Owner for any deletion or change which results in a net decrease in the Contract Sum will be the amount of the actual net cost as confirmed by the Architect. When both additions and credits covering related Work or substitutions are involved in any one change, the allowance for overhead and profit shall be figured on the basis of the net increase, if any, with respect to that change.

7.1.5 The reasonable (as stated herein) allowance for overhead and profit combined, included in the total cost to the Owner, shall be based upon the following schedule:
For the Contractor, for any work performed by his own forces, 12% of the cost;
For each Sub-Contractor involved, work performed by his own forces, 12% of the cost;
For the Contractor, for work performed by his sub-contractor, 8% of the amount due the sub-contractor.

7.1.6 Subsequent to the approval of a Change Order, whether involving a change in Contract Sum, contract time or both, no additional claim related to that matter will be considered by the Owner. A change incorporated into a Change Order is therefore, all inclusive, and includes such factors as project impact, schedule "ripple" effect or other items which may pertain to such change.

ARTICLE 8 - TIME

8.3 Delays and Extensions of Time
Add new sub-paragraphs:

8.3.4Landscape work and corresponding seasonally limited work may be scheduled for later completion, as mutually agreed upon, and completed under approved working conditions.

8.3.5 When designated by the Architect, additional time of one month will be allowed for the principal purpose of removing materials and equipment from the site and for the final cleaning up operations.

ARTICLE 9 - PAYMENTS AND COMPLETION

9.2 Delete Paragraph 9.2, SCHEDULE OF VALUES, in its entirety.
Refer to Specification Section entitled, SUBMITTALS, for provisions on the subject. References to Section 9.2 elsewhere in the Contract Documents shall read as referring to that Section of the Specifications.

9.3 Applications for Payment

9.3.1 Add the following sentence:
The form of Application for Payment shall be AIA Document G702, APPLICATION AND CERTIFICATION FOR PAYMENT, supported by AIA Document G702A, Continuation Sheet. Prior to the submission of the completed (typed) application, submit a draft copy for review by the Architect.

9.4 Certificates for Payment
Add new sub-paragraphs:

9.4.3 First Certificate for Payment - The Architect will process this Certificate, only after he has received (1) the information required of Article 7 of the Instructions to Bidders, (2) Certification that the Contractor is currently maintaining Record Drawings, (3) decisions on options indicated in Section 010100 (if any), (4) submissions required in Section 013000, and (5) is adhering to the requirements of Article 3 of the General Conditions and Supplementary Conditions.

9.4.4Second and Subsequent Certificates for Payment - The Architect will process the second certificate only after receipt of (1) Certificates that contractor is currently maintaining record drawings, (2) Release of

© THE ROBINSON GREEN BERETTA CORPORATION - 6060-9007

Liens, (3) Certification of foundation and building layout survey data if specified in Section 010100, and (4) all proposed materials and color samples have been submitted for Architect's approval and color selections. Certification as to maintenance of Record Drawings and Releases of Lien will accompany subsequent applications, otherwise the Architect will not process the respective Certificate for Payment.

9.6 Progress Payments.

9.6.1 Add the following to 9.6.1:
The Owner shall make payments on account of this Contract as provided herein as follows: On or about the 15th day of each month, 95 percent of the value, based on the Contract prices for labor and materials incorporated in the work and of materials suitably stored at the site thereof or at some other location agreed upon, in writing, by the parties up to the first day of that month, as estimated by the Architect, less the aggregate of previous payments; and upon substantial completion of the entire work, a sum sufficient to increase the total payments to 95% of the Contract Price.
Such reduction shall occur upon the Owner's approval and after receipt of AIA Document G707A (Consent of Surety to Reduction).
9.8 Substantial Completion.
9.8.1 Add the following to 9.8.1:
Prior to issuance of a Certificate of Substantial Completion, and in addition to the requirements herein, the Contractor and his sub-contractors shall submit: (1) their respective certificates of contract document compliance; (2) warranties and guarantees; (3) bonds; (4) certificates and affidavits; (5) operating manuals, report of Owner instructions and test results; (6) project record documents, including record drawings; (7) extra materials and samples (as specified) required for Owner; and (8) Occupancy Permit, if required.

9.10 FINAL COMPLETION AND FINAL PAYMENT

9.10.1 Add the following to 9.10.1:
Prior to final inspection, and in addition to the requirements herein, submit: (1) Contractor's Affidavits (AIA Document G706 and G706A); and Consent of Surety (AIA Document G707).
Add new sub-paragraphs:

9.11 Releases of Lien.

9.11.1 The Contractor shall submit Releases of Lien from all sub-contractors and material suppliers indicating payment(s) received from the previous applications. Certificates for Payment will not be processed unless these releases are included therewith.

9.11.2 Immediately satisfy any lien or encumbrance which, because of any act or default of the Contractor is filed against the premises, and indemnify and save the Owner harmless against all resulting loss and expenses, including attorney's fees. In addition, moneys due under this Contract, as may be considered necessary by the Owner, may be retained by the Owner until all such suits, claims for damages or expenses as aforesaid shall been settled and paid.

9.11.3 The statement on the Standard AIA Form G702, Certificate for Payment, which certifies that "all bills are paid for which previous certificates for payment were issued" shall be notarized by a Notary Public currently licensed to practice in the State in which the Project is located.

9.12 Liquidated Damages.

9.12.1 The Owner will suffer financial loss if the Project is not completed (Substantial and Final) on the dates set forth in the Contract Documents. The Contractor (and his Surety) shall be liable for and shall pay to the Owner the sums stipulated in the Bid Form as fixed, agreed, and liquidated damages for each calendar day of delay until the Work is Completed.

ARTICLE 11 - INSURANCE AND BONDS

© THE ROBINSON GREEN BERETTA CORPORATION - 6060-9007

11.1 Contractor's Liability Insurance

Add new sub-paragraph:

11.1.1.9 Liability insurance shall include all major divisions of coverage and be on a comprehensive general liability basis including:
Premises-Operations (including (X-C-U)
Independent contractor's protective
Blanket contractual
Owned, non-owned and hired motor vehicles
Broad form property coverage (including explosion, collapse and underground)

Add the following Clause 11.1.2.1 to 11.1.2:

11.1.2.1 The insurance required by sub-paragraph 11.1.1 shall be written for not less than the following, or greater if required by law:
Worker's Compensation:
State and Federal (where applicable) - Statutory
Employer's Liability - $500,000.
Comprehensive General Liability (including Premises-Operation; Independent Contractors' Protective; Products and Completed Operations; Broad Form Property Damages; Contractual and Personal Injury)
Bodily Injury/Property Damage:
$1,000,000. - Each Occurrence
$2,000,000. - Annual Aggregate
Products and Completed Operations to be maintained for two (2) years after final payment.
Property Damage Liability Insurance will provide X, C or U coverage as applicable.
Comprehensive Automobile Liability:
Bodily Injury/Property Damage:
$1,000,000. - Each Occurrence

Add the following Clause 11.1.3.1 to 11.1.3:

11.1.3.1 The Contractor shall furnish one copy each of Certificates of Insurance, acceptable to the Owner, herein required for each copy of the Agreement which shall be specifically set forth evidence of all coverage required by sub-paragraphs 11.1.1, 11.1.2 and 11.1.3. The form of the Certificate shall be acceptable to the Owner. The Contractor shall furnish to the Owner copies of any endorsements that are subsequently issued amending coverage or limits.

11.2 Owner's Liability Insurance.

Change sub-paragraph 11.2.1 to read:

11.2.1 The Contractor shall furnish the Owner, through the Architect, an insurance certificate providing Owner's Protective Liability extended to include the interests of the Architect, and to protect the Owner and the Architect, The Robinson Green Beretta Corporation, from any liability which might be incurred against them as result of any operation of the Contractor or his sub-contractors or their employees. Such insurance shall be written for the same limits as the Contractor's Liability Insurance, and shall include the same coverage.

11.3 Property Insurance.

Change sub-paragraph 11.3.1 to read:

11.3.1 The Contractor shall purchase and maintain property insurance upon the entire Work at the site to the full insurable value thereof. Such insurance shall be in a company or companies against which the Owner has no reasonable objection. This insurance company shall include the interests of the Owner, the

© THE ROBINSON GREEN BERETTA CORPORATION - 6060-9007

Contractor, Sub-contractors and Sub-subcontractors in the Work and shall insure against the perils of fire and extended coverage and shall include "all risk" insurance for physical loss or damage including, without duplication of coverage, theft, vandalism, and malicious mischief. If not covered under all risk insurance or otherwise provided in the Contract Documents, the Contractor shall effect and maintain similar property insurance on portions of the Work stored off the site or in transit when such portions of the Work are to be included in an application for Payment under Sub-paragraph 9.3.2.

11.3.1.1 The form of policy for this coverage shall be completed value.

11.3.1.2 If by the terms of this insurance any mandatory deductibles are required, or if the Contractor should elect, with concurrence of the Owner, to increase the mandatory deductible amounts, the Contractor shall be responsible for payment of the amount of the deductible in the event of a paid claim.

11.3.4 Delete this sub-paragraph in its entirety.

Change sub-paragraph 11.3.6 to read:

11.3.6 Before an exposure to loss may occur, the Contractor shall file with the Owner two certified copies of the policy or policies providing this Property Insurance coverage, each containing those endorsements specifically related to the Project. Each policy shall contain a provision that the policy will not be canceled or allowed to expire until at least thirty (30) days' prior written notice has been given to the Contractor.

ARTICLE 16 - EQUAL OPPORTUNITY

16.1 The Contractor shall maintain policies of employment as follows:

16.1.1 The Contractor and all Sub-contractors shall not discriminate against any employee or applicant for employment because of race, religion, color, sex, national origin or age. The Contractor shall take affirmative action to insure that applicants are employed, and that employees are treated during employment without regard to their race, religion, color, sex, national origin or age. Such action shall include, but not be limited to the following: employment, upgrading, demotion or transfer; recruitment or recruitment advertising; layoff or termination; rates of pay or other forms of compensation; and selection for training, including apprenticeship. The Contractor agrees to post in conspicuous places, available to employees and applicants for employment, notices setting forth the policies of non-discrimination.

16.1.2 The Contractor and all Sub-contractors shall, in all solicitations or advertisements for employees placed by them on their behalf, state that all qualified applicants will receive consideration for employment without regard to race, religion, color, sex, national origin or age.

END OF SECTION 008000

© THE ROBINSON GREEN BERETTA CORPORATION - 6060-9007

SECTION 010100 - SUMMARY OF THE WORK

PART 1 - GENERAL

1.1 RELATED DOCUMENTS

A. The General Conditions, Supplementary Conditions and applicable portions of Division 1 of the Specification are a part of this Section, which shall consist of all labor, materials, equipment, tools, construction equipment and machinery, water, heat, utilities, transportation and other facilities and services necessary for the proper execution and completion of the work, whether temporary or permanent and whether or not incorporated or to be incorporated in the work; and as related to the project or projects defined in the Bidding Requirements.

B. The specification format used herein is in accordance with MASTERFORMAT, CSI (2004 Format) and in no way intends to restrict this Contractor from expediting his work as he sees fit, nor is there any intention of segregating the units of work as related to specific trades involving jurisdictional problems.

1.2 WORK COVERED BY CONTRACT DOCUMENTS

A. Project Identification: RIPTA Red Line Route and Station Installations

B. Project Location: Providence and Pawtucket, Rhode Island

C. Owner: Rhode Island Public Transit Authority

D. Architect/Engineer: The Robinson Green Beretta Corporation, 50 Holden Street, Providence, RI

E. Contractor: To be determined.

1.3 SUMMARY OF THE WORK

A. The work includes but is not limited to: The receiving and safe storage of Owner purchased bus stop shelters, signage, benches, and any other bus stop equipment until installation. Work will primarily include installation of bus stop installation, concrete slab work, and tree installations.

B. Provide all pedestrian and vehicle protection devices including but not limited to, signage, flaggers, and barriers as required to ensure safe access through the and surrounding lanes during all hours.

C. Through this Invitation For Bids (IFB), the Rhode Island Public Transit Authority seeks to enter into a contract with a company for the installation/construction of the following items at up to 51 locations along the length of the R-Line:
   1. Up to Ten (10) four-post transit shelters (approximately 6’X16’) – Currently stored at RIPTA
   2. Up to Six (6) Large four-post transit shelters (approximately 6’X20’) – Currently stored at RIPTA
   3. Up to Eight (8) cantilevered transit shelters (approximately 5’X16’) – Currently stored at RIPTA
   4. Up to Two (2) Large cantilevered transit shelters (approximately 5’X20’) – Currently stored at RIPTA

5. Up to Four (4) windscreens – Currently stored at RIPTA
6. Up to Thirty-four (34) benches – Currently stored at RIPTA
7. Up to Thirty-one (31) trash cans – Currently stored at RIPTA
8. Up to Twenty-four (24) bicycle racks – Currently stored at RIPTA

9. Up to Twenty-one (21) wayfinding "totems" – To be purchased by RIPTA and received by Contractor
10. Up to Thirty-one (31) enhanced transit signs" – To be purchased by RIPTA and received by Contractor
11. Up to Twenty-six (26) name plate and identity graphics" – To be purchased by RIPTA and received by Contractor
12. Up to Fourteen (14) art panels installed directly into bus shelters" – To be purchased by RIPTA and received by Contractor
13. Up to Eight (8) art benches" – To be purchased by RIPTA and received by Contractor
14. On-street striping delineating bus stops" – To be purchased by RIPTA and received by Contractor

D. Receiving, Retrieval, and Storage

1. The Contractor will be responsible for receiving, from the artists, and storing project artwork (14 art panels and 8 art benches) and signage (21 wayfinding totems and 31 enhanced transit signs) at a secure location as defined below.

    a. Successful bidder is responsible for coordinating delivery of the artwork and signage and any associated accessories.
    b. The delivery must be received by the successful bidder within thirty (30) days of the Notice to Proceed and RIPTA's approval of the secure site.
    c. The successful bidder shall be responsible for transporting and delivery of the artwork, signage, and any associated accessories to the individual project sites at the appropriate time.
    d. Amenities for Kennedy Plaza, Providence Station, and Downtown Pawtucket will be delivered under this contract, but will not be installed under this contract. The contractor and RIPTA must coordinate delivery of these amenities to RIPTA.

2. The successful bidder is also required to retrieve all shelters and passenger amenities from RIPTA's headquarters (705 Elmwood Ave., Providence, RI 02907) upon award.

    a. All product must be retrieved at the same time. Partial retrieval is not acceptable.
    b. The contractor is responsible for coordinating the retrieval directly with RIPTA and must schedule this two (2) weeks in advance.
    c. Retrieval must be completed within thirty (30) days of the Notice to Proceed and RIPTA's approval of the secure site.
    d. The project shelters and site accessories shall be the responsibility of the successful bidder to transport and deliver the items to the individual project sites at the appropriate time.

3. Storage shall be in accordance with artist and manufacturer instructions. Items shall be stored in an interior space, off the ground or floor and be protected from the weather elements at all times prior and during installation. The method of storage shall be such as to prevent the item damage and/or warping.

4. RIPTA's Owner's Representative shall be present when all items are received by the successful bidder.

E. Secure Storage Site

1. The secure storage site location and address shall be provided to RIPTA within five (5) days following contract signing.

2. Within five (5) days of receipt of the secure storage location, RIPTA shall visit and review the site for acceptability.
3. Should the site be unacceptable, the successful bidder has another five (5) days to select another location and advice RIPTA of the location for review.
4. The secure site can be located at the successful bidders main office/storage site. The selected area must meet the criteria outlined below.
5. Should the successful bidder not have sufficient storage space at his main office/storage site, the successful bidder shall rent a secure site that is within ten (10) miles of RIPTA's offices on Elmwood Avenue.
6. Secure storage area criteria
   a. The secure storage area must have limited, securable, and controlled access.
   b. The secure storage area must be of sufficient size to properly store the items without relocating items every time a particular item is to be removed for delivery to the project work site by the successful bidder.
   c. The secure site must provide protection from the weather elements, i.e. wind, ice, etc…
7. Regardless of the secure storage location, the successful bidder shall secure, pay for, and provide proof of insurance covering all project artwork, signage, shelters, site accessories, and any associated items.

F. Construction/Installation Schedule
1. Within five (5) days following the contract signing, the successful bidder shall coordinate with the Owner's Rep and update and revise the proposed construction schedule submitted with their bid.
2. The resulting schedule shall be used to inform the artists as to when their artwork will be installed. The artists are to be present when the art is installed.

G. Site Work and Installation
1. All site and installation work shall be done in accordance with State, Federal, and Local codes and ordinances.
2. All work shall be done in accordance with the project plans, specifications, and manufacturer's instructions.
3. Should there be a conflict between the drawings and specifications and the manufacturer's instructions, the successful bidder shall immediately contact the Architect for clarification and resolution.
4. Street trees are included in the documents for information only. Installation of street trees is <u>not</u> part of this contract and should be treated as a point of reference only.
5. Successful bidder shall fully erect and install all equipment, amenities, shelters, signage, and otherwise inferred items indicated in the Contract Documents for a complete and functional installation.
6. Successful bidders shall be responsible for coordination, installation, and maintaining all safety devises, including but not limited to, signage, barriers, and police details, as required for public safety, both pedestrian and vehicular.
7. The function of each stop shall be maintained during construction. The successful bidder shall coordinate with RIPTA for each stop and develop and then execute a plan of action demonstrating how it plans to maintain safe and undisturbed function at each stop during construction.
8. The successful bidder shall coordinate with all manufacturers in attaining any potential missing or replacements for any mis-manufacturered elements to ensure a fully complete and functioning installation at each station stop.

1.4 CONTRACTOR'S DUTIES

A. The Contractor is responsible for all personnel involved in the work, including those of his direct employ, his sub-contractors and suppliers of materials and equipment and/or labor. The

© THE ROBINSON GREEN BERETTA CORPORATION - 6060-9007

Technical Specifications have been divided for convenience only to cover the scope of work, and where reference to a particular contractor is noted, it is for convenience only. The Owner and Architect only recognize one Contractor as party to this Contract.

B. As it is impractical to enumerate every piece of equipment, device and/or accessory required for proper operation of the indicated systems specified within their respective Sections or Divisions of the Project Manual; it is intended that all materials, systems, and/or equipment, required to insure proper operation of the equipment, device, and/or accessory, be provided as a part of the Work of this Project so the specified work or system functions, and/or performs as required by the specification. To infer the intent is otherwise, is to render the specified work or system less than required.

C. Except as specifically noted, provide and pay for:
   1. Labor, materials and equipment.
   2. Compete design and engineering required for complete and proper system installation and certification of the installed Life Safety Line Systems for each installation location in the existing structure.
   3. Tools, construction equipment and machinery.
   4. Water, heat and utilities required for construction.
   5. Other facilities and services necessary for proper execution and completion of the Work.

D. Owner is exempt from sales tax on products permanently incorporated in the Work.
   1. Obtain sales tax exemption certificate number from Owner.
   2. Place exemption certificate number on invoices for materials incorporated in the Work.
   3. Furnish copies of invoices to the Owner.
   4. Upon completion of the Work, file with the Owner notarized statement that all purchases made under exemption certificate were entitled to be exempt.
   5. Pay legally assessed penalties for improper use of exemption certificate number.

E. Secure and pay for, as necessary for proper execution and completion of the Work, and as applicable at time of receipt of Bids:
   1. Permits.
   2. Government fees.
   3. Licenses.

F. Give required notices.

G. Comply with codes, ordinances, rules, regulations, orders and other legal requirements of public authorities which bear on the performance of the Work.

H. Promptly submit written notice to the Architect of observed variance of Contract Documents from legal requirements.

I. Lay out all work and be responsible for all lines, elevations, measurements of the building, utilities and site work executed under the Contract. Verify the figures shown before laying out the Work and be responsible for any error resulting from failure to do so. Employ a competent registered engineer or registered land surveyor, approved by the Architect, for establishing all lines, levels and dimensions, and place at the disposal of the Architect, as required for checking purposes.

J. Enforce strict discipline and good order among employees. Do not employ persons not skilled in assigned task.

K. Notify all trades, sub-contractors and suppliers of all designated alternatives and be responsible for their coordination.

L. At your option, certain indicated materials and/or procedures are specified herein to be used in lieu of other indicated materials and/or procedures, at no change in Contract Price. Such options should be analyzed and coordinated during the bidding period, so that the selection of any may immediately be brought to the Architect's attention, once the Contract is awarded (within thirty days thereafter).

1.5 HEALTH AND SAFETY PRECAUTIONS

A. OSHA:
1. These construction documents, and the joint and several phases of construction hereby contemplated, are to be governed, at all times, by the applicable portions of the Federal Laws, including but not limited to, the latest amendments of the following:
   a. Williams-Steiger Occupational Safety and Health Act of 1970, Public Law 91-956;
   b. Part 1910 - Occupational Safety and Health Standards, Title 29, Code of Federal Regulations, as amended to date;
   c. Part 1926 - Safety and Health Regulations for Construction, Title 29, Code of Federal Regulations, as amended to date.
2. This Project, the Contractor and his sub-contractors shall, at all times, be governed by applicable Chapters of Title 29, Code of Federal Regulations, Part 1926 - Safety and Health Regulations for Construction, as amended to date.
   a. Note: Furnish the Owner and Architect copies of all accident reports.

B. Dig Safe:
1. All excavations near underground public utility facilities shall be performed in accordance with Rhode Island State law, Title 39, Amended July 1, 1984 (Chapter 39-1.2).

C. Emergencies:
1. Should tornado, hurricane, gale or heavy wind warnings be issued, take precautions to minimize the danger to persons, to the work, and to the adjacent property. Damage caused to any part of the work shall be rectified or replaced to the complete satisfaction of the Architect and at no expense to the Owner. Injury to personnel or damage to adjacent property because of the work shall be the complete responsibility of the Contractor, and he accepts exclusive responsibility for same.

D. Loading:
1. Do not load any part of the work involved in this Contract, during construction, with a load greater than it is calculated to carry with safety. Should any accidents or damage occur through any violation of this requirement, the Contractor shall be held responsible under his Contract and Bond. When, in the opinion of the Architect, portions of the structure appear to be overloaded, it shall be the Contractor's responsibility to prove otherwise, or the Contractor shall follow the instructions of the Architect in connection with reduction of the loads.

1.6 PROJECT RECORD DOCUMENTS

A. Maintain at job site, one copy of:
1. Contract Drawings.
2. Specifications.
3. Addenda.
4. Reviewed Shop Drawings.
5. Record Drawings.
6. Change Orders.
7. Other modifications to Contract.

8. Field Test Reports.
9. Approved materials, samples and colors.

B. Store documents in approved field construction office, apart from documents used for construction.

C. Provide files and racks for storage of documents.
   1. Provide permanent red pen or pencil for all marking.

D. File documents in accordance with Project Filing Format of MASTERFORMAT.

E. Maintain documents in clean, dry, legible condition.

F. Do not use record documents for construction purposes.

G. Make documents available at all times for inspection by Architect and Owner.

H. Recording changes:
   1. Keep record documents current.
   2. Do not permanently conceal any work until required information has been recorded.
   3. Contract Drawings: Legibly mark to record actual construction and the following:
      a. Record various elements of foundations in relation to lowest floor elevation.
      b. Reference horizontal and vertical location of underground utilities and appurtenances to permanent surface improvements.
      c. Reference location of internal utilities and appurtenances concealed in construction to visible and accessible features of structure.
      d. Record field changes of dimensions and details.
      e. Record changes made by Change Order or Field Order.
      f. Record details not on original Contract Drawings.
   4. Specifications and Addenda: Legibly mark up each Section to record the following:
      a. Manufacturer, trade name, catalog number, and supplier of each product and item of equipment actually installed.
      b. Changes made by Change Order and Field Order.
      c. Other matters and materials not previously specified.
   5. Shop Drawings: Maintain as record documents; legibly annotate drawings to record changes after review.

1.7 TRANSPORTATION AND HANDLING

A. Transport all materials and equipment on legally approved conveyances as required or recommended by the respective manufacturer or supplier.

B. Receive and handle all materials and equipment, at the project site, by conveyances or methods as recommended by the respective manufacturer or supplier.

C. Coordinate delivery of equipment and materials when two or more trades, contractors or suppliers are involved.

D. Remove from the site any material or item of equipment damaged during the transportation or handling process, and immediately replace at no additional cost to the Owner.

1.8 STORAGE AND PROTECTION

A. Store all materials and equipment as recommended by the respective manufacturer or supplier, including the following minimum requirements.

B. Upon receipt of such materials and equipment, check, distribute, store and safeguard in a clean, dry, ventilated location.

C. Elevate off the ground, items which can be stored in exterior locations, and completely cover with approved tarpaulins. Protect against the elements at all times.

D. Maintain all storage areas in a clean and orderly condition at all times.

E. Immediately replace any material or item of equipment damaged, due to inadequate storage protection, at no additional cost to the Owner.

1.9 CUTTING AND PATCHING

A. Execute cutting, including excavating, fitting or patching work required to:
   1. Make several parts fit properly.
   2. Uncover work to provide for installation of ill-timed work.
   3. Remove and replace defective work.
   4. Remove and replace work not conforming to the Contract Documents.
   5. Remove samples of installed work, as specified, for testing.
   6. Install specified work in existing construction.

B. In addition to the Contract requirements, upon written instructions from Architect:
   1. Uncover work to provide for Architect's observation of covered work, as required by General Conditions.
   2. Remove samples of installed materials for testing; as required by the General Conditions.

C. Do not endanger any work by cutting or altering work, or any part of it.

D. Do not cut or alter work of another Contractor without written permission of the Architect.

E. Prior to cutting which affects structural safety of Project, or work of another Contractor, submit written notice to Architect requesting consent to proceed with cutting.

F. Prior to cutting and patching, done on instruction of the Architect, submit cost estimate.

G. Should conditions of work, or schedule, indicate change of materials or methods, submit written recommendations to the Architect including:
   1. Conditions indicating change.
   2. Recommendations for alternative materials or methods.
   3. Submittals required for Substitutions.

H. Submit written notice, to the Architect, designating time work will be uncovered, to provide for observation.

I. Payment for costs caused by ill-timed or defective work, or work not conforming to the Contract Documents, including costs for additional services of Architect will be borne by the Contractor.

J. Contractor Inspection:
   1. Inspect existing conditions of work, including elements subject to movement or damage during:
      a. Cutting and patching.

b. Excavating and backfilling.
2. After uncovering work, inspect conditions affecting installation of new products.

K. Preparation: (prior to cutting)
1. Provide shoring, bracing and support as required to maintain structural integrity of the Project.
2. Provide protection for other portions of the Project.
3. Provide protection from the elements.

L. Performance: Perform all work of fitting, adjustment, cutting, patching, finishing, and restoration to perfectly match the quality as specified throughout these specifications.

1.10 OWNER-FURNISHED PRODUCTS

A. Where Owner furnished and/or Owner furnished and installed products or equipment is specified, the Contractor is responsible to verify and coordinate, with the Owner, the extent of the Work under this Contract, associated with such product or equipment.

B. Owner's duties:
1. Schedule delivery date, with supplier, in accordance with the Construction Schedule.
2. Obtain installation drawings and instructions.

C. Contractor's duties:
1. Designate required delivery date for each product in accordance with the Construction Schedule.
2. Promptly inspect delivered products, report damaged or defective products.
3. Handle on and off site, including uncrating and storage.
4. Protect from exposure to elements and from damage.
5. Repair or replace items damaged as a result of Contractor's operations.

1.11 CONTRACTOR USE OF PREMISES

A. Confine operations at site to areas permitted by:
1. Law.
2. Ordinances.
3. Permits.
4. Contract Documents.

B. Do not unreasonably encumber the site with materials and equipment.

C. Do not load structure with weight that will endanger structure.

D. Assume full responsibility for protection and safekeeping of products stored on the premises.

E. Move any stored products which interfere with operations of Owner or other Contractor.

F. Obtain and pay for use of additional storage or work areas needed for operations.

G. Limit use of site for work and storage within confines of the Project Limit Line.

PART 2 - PRODUCTS

A. Not Used

PART 3 - EXECUTION

A. Not Used

B. END OF SECTION 010100

SECTION 013000 - SUBMITTALS AND ADMINISTRATION

PART 1 - GENERAL

1.1 RELATED DOCUMENTS

A. The General Conditions, Supplementary Conditions and applicable portions of Division 1 of the specification are a part of this Section, which shall consist of all labor, equipment and materials necessary to complete all submittal work indicated on the drawings and herein specified.

1.2 RELATED REQUIREMENTS SPECIFIED ELSEWHERE

A. Certifications and Special Guarantees: Individual Specification Sections.

B. Submittals for Contract Closeout: Section 017000.

1.3 SUBMITTALS REQUIRED PRIOR TO START OF WORK

A. Bonds, as required.

B. Insurance Certificates and AIA Document G705 (Certificate of Insurance).

1.4 CONTRACTOR'S CONSTRUCTION SCHEDULES

A. Submit schedules to the Architect, within two weeks after the award of Contract, which shall include time of the start of completion of each section of the work and the anticipated monthly amount of work in each section. The schedule shall not exceed time limits current under the Contract Documents. Cause of failure to meet the time schedule on any section by one week shall be accounted for to the Architect, in writing, with a copy for the Owner. Submit two copies of this schedule to the Architect with each monthly requisition for payment. Mark with red pencil to indicate progress to date in each category. The Architect reserves the right to indicate when and where any work in any portion of this Contract shall be undertaken, suspended or completed.

B. Prepare and keep current, for Architect's approval, a schedule of submittals which is coordinated with the Contractor's Construction Schedule and allows the Architect reasonable time to review submittals.

1.5 SCHEDULE OF VALUES

A. Within two weeks of the award of the Contract, submit a detailed Schedule of Values of the Project by technical specification section, and coordinated with the Construction Schedule.
   1. Include in the Schedule, a sum for each section of the specification. Do not exclude Division 1. (In fact, incorporate General Conditions and its related items as part of Section 010100.)

B. Each item in the Schedule of Values shall include its proper share of overhead and profit. This Schedule, when approved by the Architect, shall be used only as a basis for reviewing the Contractor's Applications for Payment.

© THE ROBINSON GREEN BERETTA CORPORATION – 6060-9007

1.6 SUBMITTALS GENERAL PROVISIONS:

A. Submittals Schedule:
   1. Contractor shall submit proposed submittals schedule to Owner and Architect for review within ten calendar days following Notice of Award.

B. Make **ALL** required submissions including Samples, Color Selections, Shop Drawings, and Project Data within 30 calendar days of Notice of Award. **No substitutions** will be accepted and/or approved for submittals not received in accordance with the Instructions to Bidders and Division 1.

C. Provisions in this section are mandatory procedures for preparing and submitting Samples, Shop Drawings, and Product Data.

D. Job delays occasioned by requirement of re-submission of samples, Shop Drawings, and Product Data not in accord with Contract Documents are Contractor's responsibility and will not be considered valid justification for extension of time.

E. Schedule Purpose is to:
   1. Demonstrate that submittals, shop drawings, data, samples and mock-ups required for Work are addressed by Contractor.
   2. Assist Architect in scheduling timely review of submittals.
   3. Schedule Contents: Description of submitted item, proposed date of submittal and proposed date of requested return by Architect.
   4. Contractor shall submit accepted schedule within ten calendar days after joint review date.

1.7 SHOP DRAWINGS, PRODUCT DATA AND SAMPLES

A. Shop Drawings are drawings, diagrams, schedules and other data specially prepared for the Work by the Contractor, Sub-contractor, manufacturer, supplier or distributor to illustrate some portion of the Work.

B. Product Data is illustrations, standard schedules, performance charts, instructions, brochures, diagrams and other information furnished by the Contractor to illustrate materials or equipment for some portion of the Work.

C. Samples are physical examples which illustrate materials, equipment or workmanship and establish standards by which the Work will be judged.

D. Shop Drawings, Product Data, Samples and similar submittals are not Contract Documents. The purpose of their submittal is to demonstrate for those portions of the Work for which submittals are required the way the Contractor proposes to conform to the information given and the design concept expressed in the Contract Documents. Review by the Architect is subject to the limitations of the General Conditions.

E. Review, approve and submit to the Architect Shop Drawings, Product Data, Samples and similar submittals required by the Contract Documents with reasonable promptness and in such sequence as to cause no delay in the Work or in the activities of the Owner or of separate contractors. Submittals made which are not required by the Contract Documents may be returned without action.

© THE ROBINSON GREEN BERETTA CORPORATION – 6060-9007

F. Perform no portion of the Work requiring submittal and review of Shop Drawings, Product Data, Samples or similar submittals until the respective submittal has been approved by the Architect. Provide such Work in accordance with approved submittals.

G. By approving and submitting Shop Drawings, Product Data, Samples and similar submittals, the Contractor represents that he has determined and verified materials, field measurements and field construction criteria related thereto, or will do so, and has checked and coordinated the information contained within such submittals with the requirements of the Work and Contract Documents.

H. The Contractor shall not be relieved of responsibility for deviations from requirements of the Contract Documents by the Architect's approval of Shop Drawings, Product Data, Samples or similar submittals unless the Contractor has specifically informed the Architect in writing of such deviation at the time of submittal and the Architect has given written approval to the specific deviation. The Contractor shall not be relieved of responsibility for errors or omissions in Shop Drawings, Product Data, Samples or similar submittals by the Architect's approval thereof.

I. Direct specific attention, in writing or on resubmitted Shop Drawings, Product Data, Samples or similar submittals, to revisions other than those requested by the Architect on previous submittals.

J. Informational submittals upon which the Architect is not expected to take responsive action may be so identified in the Contract Documents.

K. When professional certification of performance criteria of materials, systems or equipment is required by the Contract Documents, the Architect shall be entitled to rely upon the accuracy and completeness of such calculations and certifications.

L. Shop drawings, product data and samples shall be dated and contain: the name of the Project; description or names of equipment, materials and items; and complete identification of locations at which the materials or equipment are to be installed.

M. Submission of shop drawings, product data and samples shall be accompanied by transmittal letter, in duplicate, containing project name, Contractor's name, number of drawings, documents and/or samples, titles and other pertinent data.

N. It is the responsibility of the Contractor to check all dimensions and details on shop drawings, before submission to the Architect, reject same if necessary and only forward to the Architect shop drawings which he is reasonably certain fulfill the requirements of Contract Documents and the Work. All shop drawings shall be checked by the Contractor, and must bear his stamp of approval; drawings submitted without this stamp of approval, will not be considered.

O. Unless otherwise indicated, submit three (3) prints of each drawing, including fabrication, erection, layout and setting drawings and such other drawings as required under various sections of the specifications until final approval is obtained. Submit copies of manufacturer's descriptive data including catalog sheets for materials, equipment and fixtures, showing dimensions, performance characteristics and capacities, wiring diagrams and controls, schedules and other pertinent information as required.

P. Contractor is responsible for obtaining and distributing prints of shop drawings as necessary after as well as before final approval. Prints of approved shop drawings shall be made from transparencies which carry the Architect's stamp of review.

Q. Within fifteen (15) calendar days after receipt of approved shop drawings, catalog cuts, equipment sheets or other material descriptive data, submit to the Architect a copy of the order

© THE ROBINSON GREEN BERETTA CORPORATION – 6060-9007

confirmation of the respective material(s), item(s) or equipment. Such confirmation must include: (1) Name of Supplier; (2) Date of Order, name, description and quantity of material(s), item(s) or equipment.

R. Maintain a complete file of all approved shop drawings, product data and samples, at the job site, until completion of the Project.

S. Submit samples of all materials, whether or not requested, for approval and color selection. Do not assume the Architect has certain color samples on file.

T. The Architect shall prepare a color schedule upon receipt of **ALL** samples and materials. No materials or products submitted for color selection shall be approved individually.

1.8 RECORD DOCUMENTS

A. Prior to the start of construction, the Architect shall deliver to the Contractor, a complete set of "Issued for Construction" drawings, and a complete project manual, including addenda, for the purpose of maintaining record documents.

B. Also, maintain a copy of all modifications and change orders.

C. Maintain the documents in a safe, dry location during the entire construction process. The Contractor, together with his Sub-contractors, shall indicate clearly and accurately, any and all changes necessitated by field conditions. In addition, accurately maintain dimensions locating all pipes, ducts, etc. built into or under concrete slabs or masonry walls, including elevations, inverts, etc.

D. With each monthly requisition, send certification, signed by the Contractor's Superintendent and Owner's Field Representative, that the documents are being maintained accurately and currently. At the completion of the Project, return the documents to the Architect, along with certification that the documents are complete in that they represent the true constructed conditions.

E. Contract Drawings: Legibly mark to record actual construction and the following:
1. Record various elements of foundations in relation to lowest floor elevation.
2. Reference horizontal and vertical location of underground utilities and appurtenances to permanent surface improvements.
3. Reference location of internal utilities and appurtenances concealed in construction to visible and accessible features of structure.
4. Record field changes of dimensions and details.
5. Record changes made by Change Order or Field Order.
6. Record details not on original Contract Drawings.

F. Specifications and Addenda: Legibly mark up each Section to record the following:
1. Manufacturer, trade name, catalog number, and supplier of each product and item of equipment actually installed.
2. Changes made by Change Order and Field Order.
3. Other matters and materials not previously specified.

G. Shop Drawings: Maintain as record documents; legibly annotate drawings to record changes after review.

1.9 ELECTRONIC FILES

© THE ROBINSON GREEN BERETTA CORPORATION – 6060-9007

A. If requested, The Robinson Green Beretta Corporation shall make electronic drawing files available to Contractor for the purpose of preparing submittals, in accordance with the following policy:
   1. Drawings shall not be e-mailed, but burned to a CD.
   2. Requester must sign Electronic File Transmittal Form.

1.10 JOB SITE ADMINISTRATION

A. The Contractor shall keep an authorized supervisory representative on site during all working hours who shall act as the agent of the Contractor.

B. The supervisory representative on the contract work shall be a competent English-speaking superintendent capable of reading and thoroughly understanding the drawings and specifications, with full authority to promptly fulfill the Contractor's duties and responsibilities on the job.

C. The Contractor's supervisory representative shall be subject to the approval of the Owner. The supervisory representative shall not be removed from the work without prior written consent of the Owner. If in the opinion of the Owner or Architect, the supervisory representative or any of his successors, proves incompetent, not conscientious or not industrious, then the Contractor shall replace him within 10 calendar days with another person approved by the Owner at no additional cost to the Owner. Approval shall not, in any way, relieve or diminish the Contractor's responsibility for supervision of the work.

D. The following will be required of all contractor personnel:
   1. No smoking, eating or drinking on site after delivery of Owner's equipment.
   2. Use of permanent toilet facilities will not be allowed.
   3. Use of audio equipment on site is prohibited for the entire duration of the project.
   4. Sexual harassment of any nature will not be tolerated.
   5. Upon partial occupancy, the following requirements shall be followed:
      a. All Construction Personnel will be required to wear I.D. badges on site at all times.
      b. Jobsite delivery access will be through one entrance. Access to alternate delivery entrances will not be permitted without prior approval of the Owner.

E. Failure to comply with the requirements outlined in above will result in immediate action by the Owner.
   1. First offense -- individual removed from premises.
   2. Second offense -- responsible subcontractor removed permanently from premises.
   3. Any infractions will adversely impact future consideration of responsible Subcontractor.

1.11 COORDINATION

A. Coordinate work of the various sections of Specifications to assure efficient and orderly sequence of installation of construction elements, with provisions for accommodating items installed later.

B. Coordinate space requirements and installation of mechanical and electrical work which are indicated diagrammatically on Drawings. Follow routing shown for pipes, ducts, and conduits, as closely as practicable; make runs parallel with lines of building. Utilize spaces efficiently to maximize accessibility for other installations, for maintenance, and for repairs.

1.12 REFERENCE STANDARDS

© THE ROBINSON GREEN BERETTA CORPORATION – 6060-9007

A. For Products specified by association or trade standards, comply with requirements of the standard, except when more rigid requirements are specified or are required by applicable codes.

B. The date of the standard is that in effect as of the Bid date, except when a specific date is specified.

C. Obtain copies of standards when required by Contract Documents. Maintain copy at job site during progress of the specific work.

1.13 CHANGE ORDER REQUESTS

A. Should the Owner request a price for contemplated changes in the work, the Contractor shall promptly advise, within 14 calendar days, the Architect, in writing, as to credit or cost proposed for the described change. The Contractor's written reply shall include a cost breakdown with appropriate back-up by Division of the proposed change in Contract Sum and extension of time required, if any.

1.14 SUBMITTALS

A. Make all submittals including Samples, Shop Drawings, and Project Data within 60 calendar days of Notice of Award.

B. Submit Shop Drawings to Owner's Insurance Carrier for approval as outlined in each section or otherwise directed by Owner's Project Representative. In general, submittals are required for Sprinkler System, Fire Suppression Systems, Roof System and Fire Alarm System.

C. Provisions in this section are mandatory procedures for preparing and submitting Samples, Shop Drawings, and Product Data. Job delays occasioned by requirement of re-submission of samples, Shop Drawings, and Product Data not in accord with Contract Documents are Contractor's responsibility and will not be considered valid justification for extension of time.

D. Submittals Schedule:
1. Contractor shall submit proposed submittals schedule to Owner and Architect for review within ten calendar days following Notice of Award.

E. Schedule Purpose is to:
1. Demonstrate that submittals, shop drawings, data, samples and mock-ups required for Work are addressed by Contractor.
2. Assist Architect in scheduling timely review of submittals.

F. Schedule Contents: Description of submitted item, proposed date of submittal and proposed date of requested return by Architect.

G. Contractor shall submit accepted schedule within ten calendar days after joint review date.

H. Product Data:
1. Contractor shall include product manufacturer's standard printed material, dated, with product description and installation instructions indicated; delete data not related to this Project or mark "VOID" as applicable.
2. Number of Copies Submitted: Number required by Contractor plus four which will be retained by Architect and Owner.

© THE ROBINSON GREEN BERETTA CORPORATION – 6060-9007

I. Shop Drawings:
1. Contractor shall conform to the following requirements:
a. Number sheets consecutively.
b. Indicate working and erection dimensions and relationships to adjacent work.
c. Indicate:
1) Arrangements and sectional views, as applicable.
2) Material, gauges, thickness, finishes, and characteristics.
3) Anchoring and fastening details; include information for making connections to adjacent work.
4) Cross-reference drawing details and specification paragraphs applicable to submitted data.
5) Contractor shall submit one sepia transparency and three black line prints of shop drawings.
6) Photocopy, autopositive, or other reproduction of Architect's Drawings are not acceptable for Subcontractors' or Vendors' Shop Drawings.

J. Samples:
1. Contractor shall prepare samples in sizes, shapes, and finishes in accord with provisions of individual specification sections.
2. Samples furnished under this section are not to be confused with full-size, on-the-site "Mock-Ups" called for in some specification sections.
3. Number of samples submitted: Number required by Subcontractor, plus two which will be retained by Architect and Owner, unless otherwise indicated. Additional samples shall be furnished as requested.

K. Quality Control Submittals: Certificates: Contractor shall submit certificates from manufacturers for each product indicating materials supplied or installed are asbestos-free.

L. Operations and Maintenance Manuals: Submit to Architect for review. All copies will be returned to contractor for final distribution to Owner. See Section 017000 - CONTRACT CLOSEOUT for more information.

M. Review:
1. Contractors:
a. Review submittals and stamp with approval action stamp containing Contractor's name, word "Approved," signed initials of approving agent, date of approval action, review notes, comments, and corrections required prior to submission to Architect. By so noting, Contractor indicates that he has reviewed and approves materials, equipment, quantities, and dimensions represented by particular submittal.
b. Contractor represents by submitting samples, Shop Drawings, and Product Data that he has complied with provisions specified. Submissions made without Contractor's approval indicated thereon will be returned without being reviewed for compliance with this requirement.
c. Date each submittal; indicate name of Project, Contractor, Subcontractor, as applicable; description or name of equipment, material, or product; and identify Work use location.
d. Accompany submittal with transmittal letter containing Project name, Contractor's name, number of samples or drawings, titles, and other pertinent data. Outline deviations, if any, in submittals from requirements of Contract Documents.
2. Architects:
a. Review submittals within fifteen calendar days of receipt from Contractor.

N. Resubmission: Contractor shall make corrections and changes indicated for rejected submissions; resubmit in same manner specified above until Architect no longer requires re-submission.

© THE ROBINSON GREEN BERETTA CORPORATION – 6060-9007

O. Distribution: Contractor is responsible for obtaining and distributing copies of submittals to his Subcontractors and Material Suppliers. Make prints of reviewed Shop Drawings from transparencies imprinted with Architect's appropriate stamp.

P. Contractor shall maintain at the present site an orderly file of all approved submittals bearing Architect's stamp for Project duration.

1.15 REQUEST FOR INFORMATION

A. Should the Contractor require additional information or clarification regarding the work, a written request, using an approved R.F.I. form, shall be submitted to the appropriate party.

PART 2 - PRODUCTS (Not Used)

PART 3 - EXECUTION (Not Used)

END OF SECTION 013000

© THE ROBINSON GREEN BERETTA CORPORATION – 6060-9007

SECTION 013100 - PROJECT MANAGEMENT AND COORDINATION

PART 4 - GENERAL

4.1 RELATED DOCUMENTS

A. Drawings and general provisions of the Contract, including General and Supplementary Conditions and other Division 01 Specification Sections, apply to this Section.

4.2 SUMMARY

A. Section includes administrative provisions for coordinating construction operations on Project including, but not limited to, the following:
   1. General coordination procedures.
   2. Coordination drawings.
   3. Requests for Information (RFIs).
   4. Project Web site.
   5. Project meetings.

B. Each contractor shall participate in coordination requirements. Certain areas of responsibility are assigned to a specific contractor.

C. Related Requirements:
   1. Division 01 Section "Closeout Procedures" for coordinating closeout of the Contract.

4.3 DEFINITIONS

A. RFI: Request from Owner, Architect, or Contractor seeking information required by or clarifications of the Contract Documents.

4.4 INFORMATIONAL SUBMITTALS

A. Subcontract List: Prepare a written summary identifying individuals or firms proposed for each portion of the Work, including those who are to furnish products or equipment fabricated to a special design. Include the following information in tabular form:
   1. Name, address, and telephone number of entity performing subcontract or supplying products.
   2. Number and title of related Specification Section(s) covered by subcontract.
   3. Drawing number and detail references, as appropriate, covered by subcontract.

B. Key Personnel Names: Within 15 days of starting construction operations, submit a list of key personnel assignments, including superintendent and other personnel in attendance at Project site. Identify individuals and their duties and responsibilities; list addresses and telephone numbers, including home, office, and cellular telephone numbers and e-mail addresses. Provide names, addresses, and telephone numbers of individuals assigned as alternates in the absence of individuals assigned to Project.
   1. Post copies of list in project meeting room, in temporary field office, on Project Web site, and by each temporary telephone. Keep list current at all times.

© THE ROBINSON GREEN BERETTA CORPORATION – 6060-9007

4.5 GENERAL COORDINATION PROCEDURES

A. Coordination: Coordinate construction operations included in different Sections of the Specifications to ensure efficient and orderly installation of each part of the Work. Coordinate construction operations, included in different Sections, that depend on each other for proper installation, connection, and operation.
   1. Schedule construction operations in sequence required to obtain the best results where installation of one part of the Work depends on installation of other components, before or after its own installation.
   2. Coordinate installation of different components to ensure maximum performance and accessibility for required maintenance, service, and repair.
   3. Make adequate provisions to accommodate items scheduled for later installation.

B. Coordination: Each contractor shall coordinate its construction operations with those of other contractors and entities to ensure efficient and orderly installation of each part of the Work. Each contractor shall coordinate its operations with operations, included in different Sections, that depend on each other for proper installation, connection, and operation.
   1. Schedule construction operations in sequence required to obtain the best results where installation of one part of the Work depends on installation of other components, before or after its own installation.
   2. Coordinate installation of different components with other contractors to ensure maximum performance and accessibility for required maintenance, service, and repair.
   3. Make adequate provisions to accommodate items scheduled for later installation.

C. Prepare memoranda for distribution to each party involved, outlining special procedures required for coordination. Include such items as required notices, reports, and list of attendees at meetings.
   1. Prepare similar memoranda for Owner and separate contractors if coordination of their Work is required.

D. Administrative Procedures: Coordinate scheduling and timing of required administrative procedures with other construction activities and activities of other contractors when appropriate and/or required, to avoid conflicts and to ensure orderly progress of the Work. Such administrative activities include, but are not limited to, the following:
   1. Preparation of Contractor's construction schedule.
   2. Preparation of the schedule of values.
   3. Installation and removal of temporary facilities and controls.
   4. Delivery and processing of submittals.
   5. Progress meetings.
   6. Preinstallation conferences.
   7. Project closeout activities.
   8. Startup and adjustment of systems.

E. Conservation: Coordinate construction activities to ensure that operations are carried out with consideration given to conservation of energy, water, and materials. Coordinate use of temporary utilities to minimize waste.
   1. Salvage materials and equipment involved in performance of, but not actually incorporated into, the Work. See other Sections for disposition of salvaged materials that are designated as Owner's property.

4.6 COORDINATION DRAWINGS

A. Coordination Drawings, General: Prepare coordination drawings, at a scale not less than 1/4” = 1’-0”, according to requirements in individual Sections, and additionally where installation is not completely shown on Shop Drawings, where limited space availability necessitates

© THE ROBINSON GREEN BERETTA CORPORATION – 6060-9007

coordination, or if coordination is required to facilitate integration of products and materials fabricated or installed by more than one entity.

1. Content: Project-specific information, drawn accurately to a scale large enough to indicate and resolve conflicts. Do not base coordination drawings on standard printed data. Include the following information, as applicable:
   a. Use applicable Drawings as a basis for preparation of coordination drawings. Prepare sections, elevations, and details as needed to describe relationship of various systems and components.
   b. Coordinate the addition of trade-specific information to the coordination drawings by multiple contractors in a sequence that best provides for coordination of the information and resolution of conflicts between installed components before submitting for review.
   c. Indicate functional and spatial relationships of components of architectural, structural, civil, mechanical, and electrical systems.
   d. Indicate space requirements for routine maintenance and for anticipated replacement of components during the life of the installation.
   e. Show location and size of access doors required for access to concealed dampers, valves, and other controls.
   f. Indicate required installation sequences.
   g. Indicate dimensions shown on the Drawings. Specifically note dimensions that appear to be in conflict with submitted equipment and minimum clearance requirements. Provide alternate sketches to Architect indicating proposed resolution of such conflicts. Minor dimension changes and difficult installations will not be considered changes to the Contract.

B. Coordination Digital Data Files: Prepare coordination digital data files according to the following requirements:
   1. File Preparation Format: Same digital data software program, version, and operating system as original Drawings.
   2. File Preparation Format: DWG, Version ACAD 2009, operating in Microsoft Windows operating system.
   3. File Submittal Format: Submit or post coordination drawing files using format same as file preparation format and Portable Data File (PDF) format.
      a. Perform three-dimensional component conflict analysis as part of preparation of coordination drawings. Resolve component conflicts prior to submittal. Indicate where conflict resolution requires modification of design requirements by Architect.
   4. Architect will furnish Contractor one set of digital data files of Drawings for use in preparing coordination digital data files.
      a. Architect makes no representations as to the accuracy or completeness of digital data files as they relate to Drawings.
      b. Digital Data Software Program: Drawings are available in AutoCAD 2009 version of digital data software program and operating system or better if used by architect and/or all consultants.
      c. Contractor shall execute a data licensing agreement in the form of AIA Document C106, Agreement included in this Project Manual.

4.7 REQUESTS FOR INFORMATION (RFIs)

A. General: Immediately on discovery of the need for additional information or interpretation of the Contract Documents, Contractor shall prepare and submit an RFI in the form specified.
   1. Architect will return RFIs submitted to Architect by other entities controlled by Contractor with no response.
   2. Coordinate and submit RFIs in a prompt manner so as to avoid delays in Contractor's work or work of subcontractors.

© THE ROBINSON GREEN BERETTA CORPORATION – 6060-9007

B. Content of the RFI: Include a detailed, legible description of item needing information or interpretation and the following:
   1. Project name.
   2. Project number.
   3. Date.
   4. Name of Contractor.
   5. Name of Architect.
   6. RFI number, numbered sequentially.
   7. RFI subject.
   8. Specification Section number and title and related paragraphs, as appropriate.
   9. Drawing number and detail references, as appropriate.
   10. Field dimensions and conditions, as appropriate.
   11. Contractor's suggested resolution. If Contractor's suggested resolution impacts the Contract Time or the Contract Sum, Contractor shall state impact in the RFI.
   12. Contractor's signature.
   13. Attachments: Include sketches, descriptions, measurements, photos, Product Data, Shop Drawings, coordination drawings, and other information necessary to fully describe items needing interpretation.
      a. Include dimensions, thicknesses, structural grid references, and details of affected materials, assemblies, and attachments on attached sketches.

C. RFI Forms: Contractors standard AIA form or AIA Document G716, Software-generated form with substantially the same content as indicated above, acceptable to Architect.
   1. Attachments shall be electronic files in Adobe Acrobat PDF format.

D. Architect's Action: Architect and Construction Manager will review each RFI, determine action required, and respond. Allow seven working days for Architect's response for each RFI. RFIs received by Architect after 1:00 p.m. will be considered as received the following working day.
   1. The following Contractor-generated RFIs will be returned without action:
      a. Requests for approval of submittals.
      b. Requests for approval of substitutions.
      c. Requests for approval of Contractor's means and methods.
      d. Requests for coordination information already indicated in the Contract Documents.
      e. Requests for adjustments in the Contract Time or the Contract Sum.
      f. Requests for interpretation of Architect's actions on submittals.
      g. Incomplete RFIs or inaccurately prepared RFIs.
   2. Architect's action may include a request for additional information, in which case Architect's time for response will date from time of receipt of additional information.
   3. Architect's action on RFIs that may result in a change to the Contract Time or the Contract Sum may be eligible for Contractor to submit Change Proposal according to Division 01 Section "Contract Modification Procedures."
      a. If Contractor believes the RFI response warrants change in the Contract Time or the Contract Sum, notify Architect in writing within 7 days of receipt of the RFI response.

E. RFI Log: Prepare, maintain, and submit a tabular log of RFIs organized by the RFI number. Submit log weekly. Use CSI Log Form 13.2B.
   1. Project name.
   2. Name and address of Contractor.
   3. Name and address of Architect
   4. RFI number including RFIs that were returned without action or withdrawn.
   5. RFI description.
   6. Date the RFI was submitted.
   7. Date Architect's response was received.

F. On receipt of Architect's action, update the RFI log and immediately distribute the RFI response to affected parties. Review response and notify Architect within 7 (Seven) days if Contractor disagrees with response.
   1. Identification of related Minor Change in the Work, Construction Change Directive, and Proposal Request, as appropriate.
   2. Identification of related Field Order, Work Change Directive, and Proposal Request, as appropriate.

4.8 PROJECT MEETINGS

A. General: Schedule and conduct meetings and conferences at Project site unless otherwise indicated.
   1. Attendees: Inform participants and others involved, and individuals whose presence is required, of date and time of each meeting. Notify Owner and Architect of scheduled meeting dates and times.
   2. Agenda: Prepare the meeting agenda. Distribute the agenda to all invited attendees.
   3. Minutes: Contractor is responsible for conducting meetings and will record significant discussions and agreements achieved. Distribute the meeting minutes to everyone concerned, including Owner and Architect, within 3 (three) days of the meeting.

B. Preconstruction Conference: Architect will schedule and conduct a preconstruction conference before starting construction, at a time convenient to Owner and Architect, but no later than 15 (Fifteen) days after execution of the Agreement.
   1. Conduct the conference to review responsibilities and personnel assignments.
   2. Attendees: Authorized representatives of Owner, Owner's Commissioning Authority, Architect, and their consultants; Contractor and its superintendent; major subcontractors; suppliers; and other concerned parties shall attend the conference. Participants at the conference shall be familiar with Project and authorized to conclude matters relating to the Work.
   3. Agenda: Discuss items of significance that could affect progress, including the following:
      a. Tentative construction schedule.
      b. Phasing.
      c. Critical work sequencing and long-lead items.
      d. Designation of key personnel and their duties.
      e. Lines of communications.
      f. Procedures for processing field decisions and Change Orders.
      g. Procedures for RFIs.
      h. Procedures for testing and inspecting.
      i. Procedures for processing Applications for Payment.
      j. Distribution of the Contract Documents.
      k. Submittal procedures.
      l. Preparation of record documents.
      m. Use of the premises and/or and existing building.
      n. Work restrictions.
      o. Working hours.
      p. Owner's occupancy requirements.
      q. Responsibility for temporary facilities and controls.
      r. Procedures for moisture and mold control.
      s. Procedures for disruptions and shutdowns.
      t. Construction waste management and recycling.
      u. Parking availability.
      v. Office, work, and storage areas.
      w. Equipment deliveries and priorities.
      x. First aid.
      y. Security.

© THE ROBINSON GREEN BERETTA CORPORATION – 6060-9007

z. Progress cleaning.

4. Minutes: Entity responsible for conducting meeting will record and distribute meeting minutes.

C. Preinstallation Conferences: Conduct a preinstallation conference at Project site before each construction activity that requires coordination with other construction.

1. Attendees: Installer and representatives of manufacturers and fabricators involved in or affected by the installation and its coordination or integration with other materials and installations that have preceded or will follow, shall attend the meeting. Advise Architect , and Owner's Commissioning Authority of scheduled meeting dates.
2. Agenda: Review progress of other construction activities and preparations for the particular activity under consideration, including requirements for the following:
   a. Contract Documents.
   b. Options.
   c. Related RFIs.
   d. Related Change Orders.
   e. Purchases.
   f. Deliveries.
   g. Submittals.
   h. Review of mockups.
   i. Possible conflicts.
   j. Compatibility requirements.
   k. Time schedules.
   l. Weather limitations.
   m. Manufacturer's written instructions.
   n. Warranty requirements.
   o. Compatibility of materials.
   p. Acceptability of substrates.
   q. Temporary facilities and controls.
   r. Space and access limitations.
   s. Regulations of authorities having jurisdiction.
   t. Testing and inspecting requirements.
   u. Installation procedures.
   v. Coordination with other work.
   w. Required performance results.
   x. Protection of adjacent work.
   y. Protection of construction and personnel.
3. Record significant conference discussions, agreements, and disagreements, including required corrective measures and actions.
4. Reporting: Distribute minutes of the meeting to each party present and to other parties requiring information.
5. Do not proceed with installation if the conference cannot be successfully concluded. Initiate whatever actions are necessary to resolve impediments to performance of the Work and reconvene the conference at earliest feasible date.

D. Project Closeout Conference: Schedule and conduct a project closeout conference, at a time convenient to Owner and Architect, but no later than 90 days prior to the scheduled date of Substantial Completion.

1. Conduct the conference to review requirements and responsibilities related to Project closeout.
2. Attendees: Authorized representatives of Owner, Owner's Commissioning Authority, Architect, and their consultants; Contractor and its superintendent; major subcontractors; suppliers; and other concerned parties shall attend the meeting. Participants at the meeting shall be familiar with Project and authorized to conclude matters relating to the Work.

© THE ROBINSON GREEN BERETTA CORPORATION – 6060-9007

3. Agenda: Discuss items of significance that could affect or delay Project closeout, including the following:
   a. Preparation of record documents.
   b. Procedures required prior to inspection for Substantial Completion and for final inspection for acceptance.
   c. Submittal of written warranties.
   d. Requirements for preparing operations and maintenance data.
   e. Requirements for delivery of material samples, attic stock, and spare parts.
   f. Requirements for demonstration and training.
   g. Preparation of Contractor's punch list.
   h. Procedures for processing Applications for Payment at Substantial Completion and for final payment.
   i. Submittal procedures.
   j. Coordination of separate contracts.
   k. Owner's partial occupancy requirements.
   l. Installation of Owner's furniture, fixtures, and equipment.
   m. Responsibility for removing temporary facilities and controls.
4. Minutes: Entity conducting meeting will record and distribute meeting minutes.

E. Progress Meetings: Conduct progress meetings at weekly and/or regular intervals.
1. Coordinate dates of meetings with preparation of payment requests.
2. Attendees: In addition to representatives of Owner and Architect, each contractor, subcontractor, supplier, and other entity concerned with current progress or involved in planning, coordination, or performance of future activities shall be represented at these meetings. All participants at the meeting shall be familiar with Project and authorized to conclude matters relating to the Work.
3. Agenda: Review and correct or approve minutes of previous progress meeting. Review other items of significance that could affect progress. Include topics for discussion as appropriate to status of Project.
   a. Contractor's Construction Schedule: Review progress since the last meeting. Determine whether each activity is on time, ahead of schedule, or behind schedule, in relation to Contractor's construction schedule. Determine how construction behind schedule will be expedited; secure commitments from parties involved to do so. Discuss whether schedule revisions are required to ensure that current and subsequent activities will be completed within the Contract Time.
      1) Review schedule for next period.
   b. Review present and future needs of each entity present, including the following:
      1) Interface requirements.
      2) Sequence of operations.
      3) Status of submittals.
      4) Deliveries.
      5) Off-site fabrication.
      6) Access.
      7) Site utilization.
      8) Temporary facilities and controls.
      9) Progress cleaning.
      10) Quality and work standards.
      11) Status of correction of deficient items.
      12) Field observations.
      13) Status of RFIs.
      14) Status of proposal requests.
      15) Pending changes.
      16) Status of Change Orders.
      17) Pending claims and disputes.
      18) Documentation of information for payment requests.

4. Minutes: Entity responsible for conducting the meeting will record and distribute the meeting minutes to each party present and to parties requiring information.
   a. Schedule Updating: Revise Contractor's construction schedule after each progress meeting where revisions to the schedule have been made or recognized. Issue revised schedule concurrently with the report of each meeting.

F. Coordination Meetings: Conduct Project coordination meetings at weekly and/or regular intervals. Project coordination meetings are in addition to specific meetings held for other purposes, such as progress meetings and preinstallation conferences.
   1. Attendees: In addition to representatives of Owner and Architect, each contractor, subcontractor, supplier, and other entity concerned with current progress or involved in planning, coordination, or performance of future activities shall be represented at these meetings. All participants at the meetings shall be familiar with Project and authorized to conclude matters relating to the Work.
   2. Agenda: Review and correct or approve minutes of the previous coordination meeting. Review other items of significance that could affect progress. Include topics for discussion as appropriate to status of Project.
      a. Combined Contractor's Construction Schedule: Review progress since the last coordination meeting. Determine whether each contract is on time, ahead of schedule, or behind schedule, in relation to combined Contractor's construction schedule. Determine how construction behind schedule will be expedited; secure commitments from parties involved to do so. Discuss whether schedule revisions are required to ensure that current and subsequent activities will be completed within the Contract Time.
      b. Schedule Updating: Revise combined Contractor's construction schedule after each coordination meeting where revisions to the schedule have been made or recognized. Issue revised schedule concurrently with report of each meeting.
      c. Review present and future needs of each contractor present, including the following:
         1) Interface requirements.
         2) Sequence of operations.
         3) Status of submittals.
         4) Deliveries.
         5) Off-site fabrication.
         6) Access.
         7) Site utilization.
         8) Temporary facilities and controls.
         9) Work hours.
         10) Hazards and risks.
         11) Progress cleaning.
         12) Quality and work standards.
         13) Change Orders.
   3. Reporting: Record meeting results and distribute copies to everyone in attendance and to others affected by decisions or actions resulting from each meeting.

PART 5 - PRODUCTS (Not Used)

PART 6 - EXECUTION (Not Used)

END OF SECTION 01 31 00

© THE ROBINSON GREEN BERETTA CORPORATION – 6060-9007

SECTION 014000 - QUALITY CONTROL

PART 7 - GENERAL

7.1 RELATED DOCUMENTS

A. Drawings and general provisions of the Contract, including General and Supplementary Conditions and other Division 01 Specification Sections, apply to this Section.

7.2 SUMMARY

A. Section includes administrative and procedural requirements for quality assurance and quality control.

B. Testing and inspecting services are required to verify compliance with requirements specified or indicated. These services do not relieve Contractor of responsibility for compliance with the Contract Document requirements.
   1. Specific quality-assurance and -control requirements for individual construction activities are specified in the Sections that specify those activities. Requirements in those Sections may also cover production of standard products.
   2. Specified tests, inspections, and related actions do not limit Contractor's other quality-assurance and -control procedures that facilitate compliance with the Contract Document requirements.
   3. Requirements for Contractor to provide quality-assurance and -control services required by Architect, Owner, Commissioning Authority and/or Construction Manager, or authorities having jurisdiction are not limited by provisions of this Section.

C. Related Requirements:
   1. Divisions 02 through 33 Sections for specific test and inspection requirements.

7.3 DEFINITIONS

A. Quality-Assurance Services: Activities, actions, and procedures performed before and during execution of the Work to guard against defects and deficiencies and substantiate that proposed construction will comply with requirements.

B. Quality-Control Services: Tests, inspections, procedures, and related actions during and after execution of the Work to evaluate that actual products incorporated into the Work and completed construction comply with requirements. Services do not include contract enforcement activities performed by Architect and/or or Construction Manager.

C. Mockups: Full-size physical assemblies that are constructed on-site. Mockups are constructed to verify selections made under Sample submittals; to demonstrate aesthetic effects and, where indicated, qualities of materials and execution; to review coordination, testing, or operation; to show interface between dissimilar materials; and to demonstrate compliance with specified installation tolerances. Mockups are not Samples. Unless otherwise indicated, approved mockups establish the standard by which the Work will be judged.
   1. Laboratory Mockups: Full-size physical assemblies constructed at testing facility to verify performance characteristics.

2. Integrated Exterior Mockups: Mockups of the exterior envelope erected separately from the building but on Project site, consisting of multiple products, assemblies, and subassemblies.
3. Room Mockups: Mockups of typical interior spaces complete with wall, floor, and ceiling finishes, doors, windows, millwork, casework, specialties, furnishings and equipment, and lighting.

D. Preconstruction Testing: Tests and inspections performed specifically for Project before products and materials are incorporated into the Work, to verify performance or compliance with specified criteria.

E. Product Testing: Tests and inspections that are performed by an NRTL, an NVLAP, or a testing agency qualified to conduct product testing and acceptable to authorities having jurisdiction, to establish product performance and compliance with specified requirements.

F. Source Quality-Control Testing: Tests and inspections that are performed at the source, e.g., plant, mill, factory, or shop.

G. Field Quality-Control Testing: Tests and inspections that are performed on-site for installation of the Work and for completed Work.

H. Testing Agency: An entity engaged to perform specific tests, inspections, or both. Testing laboratory shall mean the same as testing agency.

I. Installer/Applicator/Erector: Contractor or another entity engaged by Contractor as an employee, Subcontractor, or Sub-subcontractor, to perform a particular construction operation, including installation, erection, application, and similar operations.
1. Use of trade-specific terminology in referring to a trade or entity does not require that certain construction activities be performed by accredited or unionized individuals, or that requirements specified apply exclusively to specific trade(s).

J. Experienced: When used with an entity or individual, "experienced" means having successfully completed a minimum of five previous projects similar in nature, size, and extent to this Project; being familiar with special requirements indicated; and having complied with requirements of authorities having jurisdiction.

7.4 CONFLICTING REQUIREMENTS

A. Referenced Standards: If compliance with two or more standards is specified and the standards establish different or conflicting requirements for minimum quantities or quality levels, comply with the most stringent requirement. Refer conflicting requirements that are different, but apparently equal, to Architect for a decision before proceeding.

B. Minimum Quantity or Quality Levels: The quantity or quality level shown or specified shall be the minimum provided or performed. The actual installation may comply exactly with the minimum quantity or quality specified, or it may exceed the minimum within reasonable limits. To comply with these requirements, indicated numeric values are minimum or maximum, as appropriate, for the context of requirements. Refer uncertainties to Architect for a decision before proceeding.

7.5 ACTION SUBMITTALS

A. Shop Drawings: For integrated exterior mockups, provide plans, sections, and elevations, indicating materials and size of mockup construction.
   1. Indicate manufacturer and model number of individual components.
   2. Provide axonometric drawings for conditions difficult to illustrate in two dimensions.

7.6 INFORMATIONAL SUBMITTALS

A. Contractor's Quality-Control Plan: For quality-assurance and quality-control activities and responsibilities.

B. Qualification Data : For Contractor's quality-control personnel.

C. Contractor's Statement of Responsibility: When required by authorities having jurisdiction, submit copy of written statement of responsibility sent to authorities having jurisdiction before starting work on the following systems:
   1. Seismic-force-resisting system, designated seismic system, or component listed in the designated seismic system quality-assurance plan prepared by Architect.
   2. Main wind-force-resisting system or a wind-resisting component listed in the wind-force-resisting system quality-assurance plan prepared by Architect.

D. Testing Agency Qualifications: For testing agencies specified in "Quality Assurance" Article to demonstrate their capabilities and experience. Include proof of qualifications in the form of a recent report on the inspection of the testing agency by a recognized authority.

E. Schedule of Tests and Inspections: Prepare in tabular form and include the following:
   1. Specification Section number and title.
   2. Entity responsible for performing tests and inspections.
   3. Description of test and inspection.
   4. Identification of applicable standards.
   5. Identification of test and inspection methods.
   6. Number of tests and inspections required.
   7. Time schedule or time span for tests and inspections.
   8. Requirements for obtaining samples.
   9. Unique characteristics of each quality-control service.

7.7 CONTRACTOR'S QUALITY-CONTROL PLAN

A. Quality-Control Plan, General: Submit quality-control plan within 10 days of Notice to Proceed, and not less than five days prior to preconstruction conference. Submit in format acceptable to Architect. Identify personnel, procedures, controls, instructions, tests, records, and forms to be used to carry out Contractor's quality-assurance and quality-control responsibilities. Coordinate with Contractor's construction schedule.

B. Quality-Control Personnel Qualifications: Engage qualified full-time personnel trained and experienced in managing and executing quality-assurance and quality-control procedures similar in nature and extent to those required for Project.
   1. Project quality-control manager may also serve as Project superintendent for small or limited projects.
   2. Project quality control manager shall not have other project responsibilities for large and/or complex projects.

C. Submittal Procedure: Describe procedures for ensuring compliance with requirements through review and management of submittal process. Indicate qualifications of personnel responsible for submittal review.

D. Testing and Inspection: In quality-control plan, include a comprehensive schedule of Work requiring testing or inspection, including the following:
   1. Contractor-performed tests and inspections including subcontractor-performed tests and inspections. Include required tests and inspections and Contractor-elected tests and inspections.
   2. Special inspections required by authorities having jurisdiction and indicated on the "Statement of Special Inspections."
   3. Owner-performed tests and inspections indicated in the Contract Documents, including tests and inspections indicated to be performed by the Commissioning Authority.

E. Continuous Inspection of Workmanship: Describe process for continuous inspection during construction to identify and correct deficiencies in workmanship in addition to testing and inspection specified. Indicate types of corrective actions to be required to bring work into compliance with standards of workmanship established by Contract requirements and approved mockups.

F. Monitoring and Documentation: Maintain testing and inspection reports including log of approved and rejected results. Include work Architect has indicated as nonconforming or defective. Indicate corrective actions taken to bring nonconforming work into compliance with requirements. Comply with requirements of authorities having jurisdiction.

7.8 REPORTS AND DOCUMENTS

A. Test and Inspection Reports: Prepare and submit certified written reports specified in other Sections. Include the following:
   1. Date of issue.
   2. Project title and number.
   3. Name, address, and telephone number of testing agency.
   4. Dates and locations of samples and tests or inspections.
   5. Names of individuals making tests and inspections.
   6. Description of the Work and test and inspection method.
   7. Identification of product and Specification Section.
   8. Complete test or inspection data.
   9. Test and inspection results and an interpretation of test results.
   10. Record of temperature and weather conditions at time of sample taking and testing and inspecting.
   11. Comments or professional opinion on whether tested or inspected Work complies with the Contract Document requirements.
   12. Name and signature of laboratory inspector.
   13. Recommendations on retesting and reinspecting.

B. Manufacturer's Technical Representative's Field Reports: Prepare written information documenting manufacturer's technical representative's tests and inspections specified in other Sections. Include the following:
   1. Name, address, and telephone number of technical representative making report.
   2. Statement on condition of substrates and their acceptability for installation of product.
   3. Statement that products at Project site comply with requirements.
   4. Summary of installation procedures being followed, whether they comply with requirements and, if not, what corrective action was taken.

5. Results of operational and other tests and a statement of whether observed performance complies with requirements.
6. Statement whether conditions, products, and installation will affect warranty.
7. Other required items indicated in individual Specification Sections.

C. Factory-Authorized Service Representative's Reports: Prepare written information documenting manufacturer's factory-authorized service representative's tests and inspections specified in other Sections. Include the following:
1. Name, address, and telephone number of factory-authorized service representative making report.
2. Statement that equipment complies with requirements.
3. Results of operational and other tests and a statement of whether observed performance complies with requirements.
4. Statement whether conditions, products, and installation will affect warranty.
5. Other required items indicated in individual Specification Sections.

D. Permits, Licenses, and Certificates: For Owner's records, submit copies of permits, licenses, certifications, inspection reports, releases, jurisdictional settlements, notices, receipts for fee payments, judgments, correspondence, records, and similar documents, established for compliance with standards and regulations bearing on performance of the Work.

7.9 QUALITY ASSURANCE

A. General: Qualifications paragraphs in this article establish the minimum qualification levels required; individual Specification Sections specify additional requirements.

B. Manufacturer Qualifications: A firm experienced in manufacturing products or systems similar to those indicated for this Project and with a record of successful in-service performance, as well as sufficient production capacity to produce required units.

C. Fabricator Qualifications: A firm experienced in producing products similar to those indicated for this Project and with a record of successful in-service performance, as well as sufficient production capacity to produce required units.

D. Installer Qualifications: A firm or individual experienced in installing, erecting, or assembling work similar in material, design, and extent to that indicated for this Project, whose work has resulted in construction with a record of successful in-service performance.

E. Professional Engineer Qualifications: A professional engineer who is legally qualified to practice in jurisdiction where Project is located and who is experienced in providing engineering services of the kind indicated. Engineering services are defined as those performed for installations of the system, assembly, or product that are similar in material, design, and extent to those indicated for this Project.

F. Specialists: Certain Specification Sections require that specific construction activities shall be performed by entities who are recognized experts in those operations. Specialists shall satisfy qualification requirements indicated and shall be engaged for the activities indicated.
1. Requirements of authorities having jurisdiction shall supersede requirements for specialists.

G. Testing Agency Qualifications: An NRTL, an NVLAP, or an independent agency with the experience and capability to conduct testing and inspecting indicated, as documented according to ASTM E 329; and with additional qualifications specified in individual Sections; and, where required by authorities having jurisdiction, that is acceptable to authorities.

1. NRTL: A nationally recognized testing laboratory according to 29 CFR 1910.7.
2. NVLAP: A testing agency accredited according to NIST's National Voluntary Laboratory Accreditation Program.

H. Manufacturer's Technical Representative Qualifications: An authorized representative of manufacturer who is trained and approved by manufacturer to observe and inspect installation of manufacturer's products that are similar in material, design, and extent to those indicated for this Project.

I. Factory-Authorized Service Representative Qualifications: An authorized representative of manufacturer who is trained and approved by manufacturer to inspect installation of manufacturer's products that are similar in material, design, and extent to those indicated for this Project.

J. Preconstruction Testing: Where testing agency is indicated to perform preconstruction testing for compliance with specified requirements for performance and test methods, comply with the following:
1. Contractor responsibilities include the following:
   a. Provide test specimens representative of proposed products and construction.
   b. Submit specimens in a timely manner with sufficient time for testing and analyzing results to prevent delaying the Work.
   c. Provide sizes and configurations of test assemblies, mockups, and laboratory mockups to adequately demonstrate capability of products to comply with performance requirements.
   d. Build site-assembled test assemblies and mockups using installers who will perform same tasks for Project.
   e. Build laboratory mockups at testing facility using personnel, products, and methods of construction indicated for the completed Work.
   f. When testing is complete, remove test specimens, assemblies, and mockups, and laboratory mockups; do not reuse products on Project.
2. Testing Agency Responsibilities: Submit a certified written report of each test, inspection, and similar quality-assurance service to Architect and Commissioning Authority, with copy to Contractor. Interpret tests and inspections and state in each report whether tested and inspected work complies with or deviates from the Contract Documents.

K. Mockups: Before installing portions of the Work requiring mockups, build mockups for each form of construction and finish required to comply with the following requirements, using materials indicated for the completed Work:
1. Build mockups in location and of size indicated or, if not indicated, as directed by Architect.
2. Notify Architect seven days in advance of dates and times when mockups will be constructed.
3. Employ supervisory personnel who will oversee mockup construction. Employ workers that will be employed during the construction at Project.
4. Demonstrate the proposed range of aesthetic effects and workmanship.
5. Obtain Architect's approval of mockups before starting work, fabrication, or construction.
   a. Allow seven days for initial review and each re-review of each mockup.
6. Maintain mockups during construction in an undisturbed condition as a standard for judging the completed Work.
7. Demolish and remove mockups when directed unless otherwise indicated.

L. Integrated Exterior Mockups: Construct integrated exterior mockup according to approved Shop Drawings and/or as indicated on Drawings. Coordinate installation of exterior envelope materials and products for which mockups are required in individual Specification Sections, along with supporting materials.

1. Exterior wall assembly complete with water mitigation management components; air and vapor barrier assembly; opening returns, etc. Minimum size of 6'x6', unless noted otherwise.

M. Laboratory Mockups: Comply with requirements of preconstruction testing and those specified in individual Specification Sections in Divisions 02 through 33.

7.10 QUALITY CONTROL

A. Owner Responsibilities: Where quality-control services are indicated as Owner's responsibility, Owner will engage a qualified testing agency to perform these services.
1. Owner will furnish Contractor with names, addresses, and telephone numbers of testing agencies engaged and a description of types of testing and inspecting they are engaged to perform.
2. Payment for these services will be made from testing and inspecting allowances, as authorized by Change Orders.
3. Costs for retesting and reinspecting construction that replaces or is necessitated by work that failed to comply with the Contract Documents will be charged to Contractor, and the Contract Sum will be adjusted by Change Order.

B. Contractor Responsibilities: Tests and inspections not explicitly assigned to Owner are Contractor's responsibility. Perform additional quality-control activities required to verify that the Work complies with requirements, whether specified or not.
1. Unless otherwise indicated, provide quality-control services specified and those required by authorities having jurisdiction. Perform quality-control services required of Contractor by authorities having jurisdiction, whether specified or not.
2. Where services are indicated as Contractor's responsibility, engage a qualified testing agency to perform these quality-control services.
   a. Contractor shall not employ same entity engaged by Owner, unless agreed to in writing by Owner.
3. Notify testing agencies at least 24 hours in advance of time when Work that requires testing or inspecting will be performed.
4. Where quality-control services are indicated as Contractor's responsibility, submit a certified written report, in duplicate, of each quality-control service.
5. Testing and inspecting requested by Contractor and not required by the Contract Documents are Contractor's responsibility.
6. Submit additional copies of each written report directly to authorities having jurisdiction, when they so direct.

C. Manufacturer's Field Services: Where indicated, engage a factory-authorized service representative to inspect field-assembled components and equipment installation, including service connections. Report results in writing as specified in Division 01 Section "Submittal Procedures."

D. Manufacturer's Technical Services: Where indicated, engage a manufacturer's technical representative to observe and inspect the Work. Manufacturer's technical representative's services include participation in preinstallation conferences, examination of substrates and conditions, verification of materials, observation of Installer activities, inspection of completed portions of the Work, and submittal of written reports.

E. Retesting/Reinspecting: Regardless of whether original tests or inspections were Contractor's responsibility, provide quality-control services, including retesting and reinspecting, for construction that replaced Work that failed to comply with the Contract Documents.

F. Testing Agency Responsibilities: Cooperate with Architect and Contractor in performance of duties. Provide qualified personnel to perform required tests and inspections.
   1. Notify Architect and Contractor promptly of irregularities or deficiencies observed in the Work during performance of its services.
   2. Determine the location from which test samples will be taken and in which in-situ tests are conducted.
   3. Conduct and interpret tests and inspections and state in each report whether tested and inspected work complies with or deviates from requirements.
   4. Submit a certified written report, in duplicate, of each test, inspection, and similar quality-control service through Contractor.
   5. Do not release, revoke, alter, or increase the Contract Document requirements or approve or accept any portion of the Work.
   6. Do not perform any duties of Contractor.

G. Associated Services: Cooperate with agencies performing required tests, inspections, and similar quality-control services, and provide reasonable auxiliary services as requested. Notify agency sufficiently in advance of operations to permit assignment of personnel. Provide the following:
   1. Access to the Work.
   2. Incidental labor and facilities necessary to facilitate tests and inspections.
   3. Adequate quantities of representative samples of materials that require testing and inspecting. Assist agency in obtaining samples.
   4. Facilities for storage and field curing of test samples.
   5. Delivery of samples to testing agencies.
   6. Preliminary design mix proposed for use for material mixes that require control by testing agency.
   7. Security and protection for samples and for testing and inspecting equipment at Project site.

H. Coordination: Coordinate sequence of activities to accommodate required quality-assurance and -control services with a minimum of delay and to avoid necessity of removing and replacing construction to accommodate testing and inspecting.
   1. Schedule times for tests, inspections, obtaining samples, and similar activities.

I. Schedule of Tests and Inspections: Prepare a schedule of tests, inspections, and similar quality-control services required by the Contract Documents as a component of Contractor's quality-control plan. Coordinate and submit concurrently with Contractor's construction schedule. Update as the Work progresses.
   1. Distribution: Distribute schedule to Owner, Architect and Owner’s Representative, testing agencies, and each party involved in performance of portions of the Work where tests and inspections are required.

7.11 SPECIAL TESTS AND INSPECTIONS

A. Special Tests and Inspections: Owner will engage a qualified testing agency and/or special inspector to conduct special tests and inspections required by authorities having jurisdiction as the responsibility of Owner, as indicated in Statement of Special Inspections attached to this Section, and as follows:

B. Special Tests and Inspections: Conducted by a qualified testing agency and/or special inspector as required by authorities having jurisdiction, as indicated in individual Specification Sections and in Statement of Special Inspections attached to this Section, and as follows:
   1. Verifying that manufacturer maintains detailed fabrication and quality-control procedures and reviews the completeness and adequacy of those procedures to perform the Work.

2. Notifying Architect, Commissioning Authority, , Construction Manager, and Contractor promptly of irregularities and deficiencies observed in the Work during performance of its services.
3. Submitting a certified written report of each test, inspection, and similar quality-control service to Architect and Commissioning Authority, and Construction Manager, with copy to Contractor and to authorities having jurisdiction.
4. Submitting a final report of special tests and inspections at Substantial Completion, which includes a list of unresolved deficiencies.
5. Interpreting tests and inspections and stating in each report whether tested and inspected work complies with or deviates from the Contract Documents.
6. Retesting and reinspecting corrected work.

PART 8 - PRODUCTS (Not Used)

PART 9 - EXECUTION

9.1 ACCEPTABLE TESTING AGENCIES

A. Firms acceptable to perform designated tests and inspections are:
1. Geisser Engineering Corporation, 227 Wampanoag Trail, Riverside, RI 02915
2. Briggs Engineering & Testing, 100 Weymouth Street, Rockland, MA 02370
3. Thielsch Engineering, 195 Frances Ave, Cranston, RI 02910
4. Other firms as approved by architect

9.2 TEST AND INSPECTION LOG

A. Test and Inspection Log: Prepare a record of tests and inspections. Include the following:
1. Date test or inspection was conducted.
2. Description of the Work tested or inspected.
3. Date test or inspection results were transmitted to Architect.
4. Identification of testing agency or special inspector conducting test or inspection.

B. Maintain log at Project site. Post changes and revisions as they occur. Provide access to test and inspection log for Architect's, Commissioning Authority's, and Construction Manager's reference during normal working hours.

9.3 REPAIR AND PROTECTION

A. General: On completion of testing, inspecting, sample taking, and similar services, repair damaged construction and restore substrates and finishes.
1. Provide materials and comply with installation requirements specified in other Specification Sections or matching existing substrates and finishes. Restore patched areas and extend restoration into adjoining areas with durable seams that are as invisible as possible. Comply with the Contract Document requirements for cutting and patching in Division 01 Section "Execution."

B. Protect construction exposed by or for quality-control service activities.

C. Repair and protection are Contractor's responsibility, regardless of the assignment of responsibility for quality-control services.

END OF SECTION 014000

SECTION 015000 - TEMPORARY FACILITIES AND CONTROLS

PART 1 - GENERAL

1.1 RELATED DOCUMENTS

A. The General Conditions, Supplementary Conditions and applicable portions of Division 1 of the specification are a part of this Section, which shall consist of all labor, equipment and materials necessary to complete all temporary facilities and controls work indicated on the drawings and herein specified.

1.2 RELATED REQUIREMENTS SPECIFIED ELSEWHERE

A. Safety Requirements: Section 010100.

1.3 ACCESS

A. Provide an adequate access and/or roads to the site of all structures, if required for the prosecution of the work.

B. Provide and maintain at least one permanent or temporary access to each work area.

C. Provide all necessary scaffolding, platforms, ladders, ramps, chutes, temporary stairs, and maintain in a safe condition throughout the construction process.

D. Provide all necessary safety barriers, protections, signage etc. to allow each stop to be continuously used during construction. Prove any temporary and permanent caps and other protective measures required for safe use and passage of all stops by the public.

1.4 HOISTING FACILITIES

A. Provide hoisting facilities as required for the vertical movement of all materials.

B. Comply with OSHA and other governing codes for all hoists, conveyors, and elevators; and maintain the facilities in compliance with the law.

1.5 TRASH:

A. Provide sufficient trash receptacles on each location.

B. Collect and deposit debris in such collection facilities.

C. Remove all debris from each job site daily. Do not allow trash to accumulate or remain on site for longer than 24 hours and never overnight.

1.6 SANITATION FACILITIES

A. Provide adequate temporary toilet facilities.

B. Maintain such facilities in a clean, sanitary condition.

1.7 DRINKING WATER AND SERVICE

A. Provide potable water in convenient and accessible locations.

B. Provide all piping, fitting, valves, connections, etc., necessary for furnishing water during the construction period.

C. Pay costs of water and temporary services.

1.8 STORAGE

A. Coordinate the allocation of storage areas to the various trades and sub-contractors.

B. Such storage areas shall be approved by the Architect.

C. Maintain such areas in a clean condition at all times.

1.9 SPECIAL CONTROLS

A. Maintain premises and property free from accumulations of waste, debris, and rubbish caused by operations.

B. Hazards Control:
1. Store volatile wastes in covered metal containers, and remove from the premises daily.
2. Prevent accumulation of wastes creating hazardous conditions.
3. Provide adequate ventilation during use of volatile or noxious substances.
4. Conduct cleaning and disposal operations to comply with local ordinances and anti-pollution laws.
5. Do not burn or bury rubbish and waste materials on the project site.
6. Do not dispose of volatile wastes such as mineral spirits, oil or paint thinner in storm or sanitary drains.
7. Do not dispose of wastes into streams or waterways.
8. Remove snow and ice from access to buildings.
9. Maintain cleaning until project, or portion thereof, is occupied by the Owner.

1.10 OTHER TEMPORARY FACILITIES AND CONTROLS

A. Protection of Work-In-Place:
1. Thoroughly protect all completed work and stored materials.
2. Provide boards, cloths, planks, waterproof paper, canvas or other means of protection and use as required to prevent damage.
3. Replace or rectify work or materials damaged by workmen, by the elements or by any other cause, to the satisfaction of the Architect and at no additional expense to the Owner.
4. Do not allow workmen, including those of any sub-contractor or supplier, to mark finish surfaces with marking pens or other such devices which are not readily erasable.

1.11 SPECIAL OPENINGS:

A. Early in the work, confer with all parties providing apparatus of various kinds. Should any be of a size and character that cannot be properly taken into the building to its indicated position through openings shown, make necessary arrangements for the installation of such items in a manner satisfactory to those providing them and to the Owner. Make good on any damage that may be caused thereby.

1.12 REMOVAL OF TEMPORARY FACILITIES

A. Remove all items indicated above and other construction of a temporary nature from the site as soon as the progress of the work, in the opinion of the Architect, will permit.

B. Recondition the portions of the site so occupied and restore to a condition acceptable to the Architect.

PART 2 - PRODUCTS (Not Used)

PART 3 - EXECUTION (Not Used)

END OF SECTION 015000

© THE ROBINSON GREEN BERETTA CORPORATION – 6060-9007

SECTION 016000 - PRODUCT REQUIREMENTS

PART 4 - GENERAL

4.1 RELATED DOCUMENTS

A. Drawings and general provisions of the Contract, including General and Supplementary Conditions and other Division 01 Specification Sections, apply to this Section.

4.2 SUMMARY

A. Section includes administrative and procedural requirements for selection of products for use in Project; product delivery, storage, and handling; manufacturers' standard warranties on products; special warranties; and comparable products.

B. Related Requirements:
1. Division 01 Section "Allowances" for products selected under an allowance.
2. Division 01 Section "Alternates" for products selected under an alternate.
3. Division 01 Section "Substitution Procedures" for requests for substitutions.
4. Division 01 Section "References" for applicable industry standards for products specified.

4.3 DEFINITIONS

A. Products: Items obtained for incorporating into the Work, whether purchased for Project or taken from previously purchased stock. The term "product" includes the terms "material," "equipment," "system," and terms of similar intent.
1. Named Products: Items identified by manufacturer's product name, including make or model number or other designation shown or listed in manufacturer's published product literature, that is current as of date of the Contract Documents.
2. New Products: Items that have not previously been incorporated into another project or facility. Products salvaged or recycled from other projects are not considered new products.
3. Comparable Product: Product that is demonstrated and approved through submittal process to have the indicated qualities related to type, function, dimension, in-service performance, physical properties, appearance, and other characteristics that equal or exceed those of specified product.

B. Basis-of-Design Product Specification: A specification in which a specific manufacturer's product is named and accompanied by the words "basis-of-design product," including make or model number or other designation, to establish the significant qualities related to type, function, dimension, in-service performance, physical properties, appearance, and other characteristics for purposes of evaluating comparable products of additional manufacturers named in the specification.

4.4 ACTION SUBMITTALS

A. Comparable Product Requests: Submit request for consideration of each comparable product. Identify product or fabrication or installation method to be replaced. Include Specification Section number and title and Drawing numbers and titles.

© THE ROBINSON GREEN BERETTA CORPORATION -6060-9007

1. Include data to indicate compliance with the requirements specified in "Comparable Products" Article.
2. Architect's Action: If necessary, Architect will request additional information or documentation for evaluation within one week of receipt of a comparable product request. Architect will notify Contractor of approval or rejection of proposed comparable product request within 15 days of receipt of request, or seven days of receipt of additional information or documentation, whichever is later.
   a. Form of Approval: As specified in Division 01 Section "Submittal Procedures."
   b. Use product specified if Architect does not issue a decision on use of a comparable product request within time allocated.

B. Basis-of-Design Product Specification Submittal: Comply with requirements in Division 01 Section "Submittal Procedures." Show compliance with requirements.

4.5 QUALITY ASSURANCE

A. Compatibility of Options: If Contractor is given option of selecting between two or more products for use on Project, select product compatible with products previously selected, even if previously selected products were also options.
   1. Each contractor is responsible for providing products and construction methods compatible with products and construction methods of other contractors.
   2. If a dispute arises between contractors over concurrently selectable but incompatible products, Architect will determine which products shall be used.

4.6 PRODUCT DELIVERY, STORAGE, AND HANDLING

A. Deliver, store, and handle products using means and methods that will prevent damage, deterioration, and loss, including theft and vandalism. Comply with manufacturer's written instructions.

B. Delivery and Handling:
   1. Schedule delivery to minimize long-term storage at Project site and to prevent overcrowding of construction spaces.
   2. Coordinate delivery with installation time to ensure minimum holding time for items that are flammable, hazardous, easily damaged, or sensitive to deterioration, theft, and other losses.
   3. Deliver products to Project site in an undamaged condition in manufacturer's original sealed container or other packaging system, complete with labels and instructions for handling, storing, unpacking, protecting, and installing.
   4. Inspect products on delivery to determine compliance with the Contract Documents and to determine that products are undamaged and properly protected.

C. Storage:
   1. Store products to allow for inspection and measurement of quantity or counting of units.
   2. Store materials in a manner that will not endanger Project structure.
   3. Store products that are subject to damage by the elements, under cover in a weathertight enclosure above ground, with ventilation adequate to prevent condensation.
   4. Protect foam plastic from exposure to sunlight, except to extent necessary for period of installation and concealment.
   5. Comply with product manufacturer's written instructions for temperature, humidity, ventilation, and weather-protection requirements for storage.
   6. Protect stored products from damage and liquids from freezing.

© THE ROBINSON GREEN BERETTA CORPORATION -6060-9007

7. Provide a secure location and enclosure at Project site for storage of materials and equipment by Owner's construction forces. Coordinate location with Owner.

4.7 PRODUCT WARRANTIES

A. Warranties specified in other Sections shall be in addition to, and run concurrent with, other warranties required by the Contract Documents. Manufacturer's disclaimers and limitations on product warranties do not relieve Contractor of obligations under requirements of the Contract Documents.
   1. Manufacturer's Warranty: Written warranty furnished by individual manufacturer for a particular product and specifically endorsed by manufacturer to Owner.
   2. Special Warranty: Written warranty required by the Contract Documents to provide specific rights for Owner.

B. Special Warranties: Prepare a written document that contains appropriate terms and identification, ready for execution.
   1. Manufacturer's Standard Form: Modified to include Project-specific information and properly executed.
   2. Specified Form: When specified forms are included with the Specifications, prepare a written document using indicated form properly executed.
   3. See Divisions 02 through 33 Sections for specific content requirements and particular requirements for submitting special warranties.

C. Submittal Time: Comply with requirements in Division 01 Section "Closeout Procedures."

PART 5 - PRODUCTS

5.1 PRODUCT SELECTION PROCEDURES

A. General Product Requirements: Provide products that comply with the Contract Documents, are undamaged and, unless otherwise indicated, are new at time of installation.
   1. Provide products complete with accessories, trim, finish, fasteners, and other items needed for a complete installation and indicated use and effect.
   2. Standard Products: If available, and unless custom products or nonstandard options are specified, provide standard products of types that have been produced and used successfully in similar situations on other projects.
   3. Owner reserves the right to limit selection to products with warranties not in conflict with requirements of the Contract Documents.
   4. Where products are accompanied by the term "as selected," Architect will make selection.
   5. Descriptive, performance, and reference standard requirements in the Specifications establish salient characteristics of products.
   6. Or Equal: For products specified by name and accompanied by the term "or equal," or "or approved equal," or "or approved," comply with requirements in "Comparable Products" Article to obtain approval for use of an unnamed product.

B. Product Selection Procedures:
   1. Product: Where Specifications name a single manufacturer and product, provide the named product that complies with requirements. Comparable products or substitutions for Contractor's convenience will not be considered.
   2. Manufacturer/Source: Where Specifications name a single manufacturer or source, provide a product by the named manufacturer or source that complies with requirements.

Comparable products or substitutions for Contractor's convenience will not be considered.

3. Products:
   a. Restricted List: Where Specifications include a list of names of both manufacturers and products, provide one of the products listed that complies with requirements. Comparable products or substitutions for Contractor's convenience will not be considered unless otherwise indicated.
   b. Nonrestricted List: Where Specifications include a list of names of both available manufacturers and products, provide one of the products listed, or an unnamed product, that complies with requirements. Comply with requirements in "Comparable Products" Article for consideration of an unnamed product.
4. Manufacturers:
   a. Restricted List: Where Specifications include a list of manufacturers' names, provide a product by one of the manufacturers listed that complies with requirements. Comparable products or substitutions for Contractor's convenience may be considered unless otherwise indicated.
   b. Nonrestricted List: Where Specifications include a list of available manufacturers, provide a product by one of the manufacturers listed, or a product by an unnamed manufacturer, that complies with requirements. Comply with requirements in "Comparable Products" Article for consideration of an unnamed manufacturer's product.
5. Basis-of-Design Product: Where Specifications name a product, or refer to a product indicated on Drawings, and include a list of manufacturers, provide the specified or indicated product or a comparable product by one of the other named manufacturers. Drawings and Specifications indicate sizes, profiles, dimensions, and other characteristics that are based on the product named. Comply with requirements in "Comparable Products" Article for consideration of an unnamed product by one of the other named manufacturers.

C. Visual Matching Specification: Where Specifications require "match Architect's sample", provide a product that complies with requirements and matches Architect's sample. Architect's decision will be final on whether a proposed product matches.
   1. If no product available within specified category matches and complies with other specified requirements, comply with requirements in Division 01 Section "Substitution Procedures" for proposal of product.

D. Visual Selection Specification: Where Specifications include the phrase "as selected by Architect from manufacturer's full range" or similar phrase, select a product that complies with requirements. Architect will select color, gloss, pattern, density, or texture from manufacturer's product line that includes both standard and premium items.

5.2 COMPARABLE PRODUCTS

A. Conditions for Consideration: Architect will consider Contractor's request for comparable product when the following conditions are satisfied. If the following conditions are not satisfied, Architect may return requests without action, except to record noncompliance with these requirements:
   1. Evidence that the proposed product does not require revisions to the Contract Documents, that it is consistent with the Contract Documents and will produce the indicated results, and that it is compatible with other portions of the Work.
   2. Detailed comparison of significant qualities of proposed product with those named in the Specifications. Significant qualities include attributes such as performance, weight, size, durability, visual effect, and specific features and requirements indicated.
   3. Evidence that proposed product provides specified warranty.

© THE ROBINSON GREEN BERETTA CORPORATION -6060-9007

4. List of similar installations for completed projects with project names and addresses and names and addresses of architects and owners, if requested.
5. Samples, if requested.

PART 6 - EXECUTION (Not Used)

END OF SECTION 016000

SECTION 017000 - CONTRACT CLOSEOUT

PART 1 - GENERAL

1.1 RELATED DOCUMENTS

A. The General Conditions, Supplementary Conditions and applicable portions of Division 1 of the specification are a part of this Section, which shall consist of all labor, equipment and materials necessary to complete all contract closeout work indicated on the drawings and herein specified.

1.2 RELATED REQUIREMENTS SPECIFIED ELSEWHERE

A. Maintenance of Project Record Documents: Section 010100.

B. Submittals relating to Payments: Supplementary Conditions.

C. Cleaning for specific products or work: Individual Specification Sections.

D. Coordinate the work of this Section with Section 017700.

1.3 ITEMS REQUIRED FOR SUBSTANTIAL COMPLETION

A. The following is a minimum list of items required for Substantial Completion:
1. Compliance Certificates.
2. Warranties and Guarantees.
3. Bonds.
4. Certificates and Affidavits.
5. Operating and Maintenance Manuals (5 copies).
6. Project Record documents.
7. Extra materials and samples.
8. Tools and spare parts, as specified.
9. Requirements for insurance "change-over".
10. Change over of locks and transmit keys.
11. Complete start-up testing of all equipment and verification.
12. Equipment operating instructions of Owner's personnel.
13. Final cleaning.

1.4 ITEMS REQUIRED FOR FINAL COMPLETION (FINAL ACCEPTANCE)

A. The following is a list of items required for Final Completion:
1. Completion of all punch list items.
2. Completion of Substantial Completion requirements.
3. Submission of final payment requests and releases.
4. Submission of final meter readings and record of stored fuel.
5. Submission of Consent of Surety.

© THE ROBINSON GREEN BERETTA CORPORATION -6060-9007

1.5 PROJECT CLOSEOUT PROCEDURES (Coordinate with General and Supplementary Conditions)

A. STEP NO. 1: Substantial Completion.
1. Contractor prepares "punch list".
2. Contractor submits items specified.
3. Architect verifies punch list, at which time the "list" will be monetized at the rate of 200% of the estimated value of each item, and that amount retained until completed.
4. Architect prepares Certificate of Substantial Completion.

B. STEP NO. 2: Final Completion.

1.6 PROJECT RECORD DOCUMENTS

A. Documents are as specified in Section 010100.

B. Deliver record documents, including final record drawings, to the Architect.

1.7 OPERATION AND MAINTENANCE MANUALS

A. Instruct the Owner's personnel with regard to equipment, systems and operating specialties which are installed as part of this Work.

B. Submit brochures indicating operating instructions and maintenance schedules for all equipment, systems, operating device and specialties.

C. Submit detailed maintenance methods and schedules for all materials and equipment provided in this Project.

1.8 GUARANTEES, BONDS, AFFIDAVITS AND CERTIFICATIONS

A. In addition to the warranty and guaranty requirements of the General Conditions, provide all other guarantees, bonds, affidavits and certificates required throughout these specifications.

1.9 FINAL INSPECTION

A. In conjunction with the final payment procedure of the Supplementary Conditions, a final inspection of the entire project will be conducted, at a mutually agreeable time, by the Owner, Contractor and Architect.

PART 2 - PRODUCTS (Not Used)

PART 3 - EXECUTION (Not Used)

END OF SECTION 017000

© THE ROBINSON GREEN BERETTA CORPORATION -6060-9007

SECTION 017100 - CLEANING

PART 1 - GENERAL

1.1 REQUIREMENTS INCLUDED

A. Execute cleaning, during progress of the work, and at completion of the work, as required by General Conditions.

1.2 RELATED REQUIREMENTS

A. Conditions of the contract.

B. Each Specification Section: Cleaning for specific products or work.

1.3 DISPOSAL REQUIREMENTS

A. Conduct cleaning and disposal operations to comply with all local codes, ordinances, regulations and anti-pollution laws.

PART 2 - PRODUCTS

2.1 MATERIALS

A. Use only those cleaning materials which will not create hazards to health or property and which will not damage surfaces.

B. Use only those cleaning materials and methods recommended by manufacturer of the surface material to be cleaned.

C. Use cleaning materials only on surfaces recommended by cleaning material manufacturer.

PART 3 - EXECUTION

3.1 DURING CONSTRUCTION

A. Execute periodic cleaning, not less than weekly, to keep the work, the site and adjacent properties free from accumulations of waste materials, rubbish and windblown debris resulting from construction operations.

B. Provide on-site containers for the collection of waste materials, debris and rubbish per Section 015000.

C. Remove waste materials, debris and rubbish from the site periodically, and dispose of at legal disposal areas away from the site.

© THE ROBINSON GREEN BERETTA CORPORATION – 6060-9007

3.2 DUST CONTROL

A. Clean interior spaces prior to the start of finish painting, and continue cleaning on an as-needed basis until painting is finished.

B. Schedule operations so that dust and other contaminants resulting from cleaning process will not fall on wet or newly coated surfaces.

3.3 PROGRESSIVE CLEANING

A. Cleaning during construction is the responsibility of the Contractor. All areas shall be cleaned in a manner acceptable to Owner.

3.4 FINAL CLEANING

A. Final cleaning before final inspection. Interior and exterior areas of the building shall be cleared of all rubbish and thoroughly cleaned by the Contractor, including the following:
   1. All construction facilities, debris, and rubbish shall be removed from the Owner's property and legally disposed of.
   2. All finished surfaces including floors, walls and ceilings shall be swept, dusted, washed, waxed and polished. This includes cleaning of the work of all finished trades where needed, whether or not cleaning for such trades is included in their respective SECTIONS.
   3. All ceilings, wall surfaces, floors, metal work, enameled metals, and the like, shall be cleaned.

3.5 OTHER CLEANING

A. Broom clean exterior paved surfaces, rake clean other surfaces of the grounds disturbed by construction.

B. Prior to final completion, Contractor shall conduct an inspection of sight-exposed interior and exterior surfaces, and all work areas, to verify that the entire work is clean.

END OF SECTION 017100

© THE ROBINSON GREEN BERETTA CORPORATION – 6060-9007

SECTION 017700 - CLOSEOUT PROCEDURES

PART 1 - GENERAL

1.1 RELATED DOCUMENTS

A. Drawings and general provisions of the Contract, including General and Supplementary Conditions and other Division 01 Specification Sections, apply to this Section.

1.2 SUMMARY

A. This Section includes administrative and procedural requirements for contract closeout, including, but not limited to, the following:
   1. Inspection procedures.
   2. Warranties.
   3. Final cleaning.

1.3 SUBSTANTIAL COMPLETION

A. Preliminary Procedures: Before requesting inspection for determining date of Substantial Completion, complete the following. List items below that are incomplete in request.
   1. Prepare a list of items to be completed and corrected (punch list), the value of items on the list, and reasons why the Work is not complete.
   2. Advise Owner of pending insurance changeover requirements.
   3. Submit specific warranties, workmanship bonds, maintenance service agreements, final certifications, and similar documents.
   4. Obtain and submit releases permitting Owner unrestricted use of the Work and access to services and utilities. Include occupancy permits, operating certificates, and similar releases.
   5. Prepare and submit Project Record Documents, operation and maintenance manuals, Final Completion construction photographs, damage or settlement surveys, property surveys, and similar final record information.
   6. Deliver tools, spare parts, extra materials, and similar items to location designated by Owner. Label with manufacturer's name and model number where applicable.
   7. Make final changeover of permanent locks and deliver keys to Owner. Advise Owner's personnel of changeover in security provisions.
   8. Complete startup testing of systems.
   9. Submit test/adjust/balance records.
   10. Terminate and remove temporary facilities from Project site, along with mockups, construction tools, and similar elements.
   11. Advise Owner of changeover in heat and other utilities.
   12. Submit changeover information related to Owner's occupancy, use, operation, and maintenance.
   13. Complete final cleaning requirements, including touchup painting.
   14. Touch up and otherwise repair and restore marred exposed finishes to eliminate visual defects.

B. Inspection: Submit a written request for inspection for Substantial Completion. On receipt of request, Architect will either proceed with inspection or notify Contractor of unfulfilled requirements. Architect will prepare the Certificate of Substantial Completion after inspection or

© THE ROBINSON GREEN BERETTA CORPORATION – 6060-9007

will notify Contractor of items, either on Contractor's list or additional items identified by Architect, that must be completed or corrected before certificate will be issued.

1. Reinspection: Request reinspection when the Work identified in previous inspections as incomplete is completed or corrected.
2. Results of completed inspection will form the basis of requirements for Final Completion.

1.4 FINAL COMPLETION

A. Preliminary Procedures: Before requesting final inspection for determining date of Final Completion, complete the following:

1. Submit a final Application for Payment according to Division 01 Section "Payment Procedures."
2. Submit certified copy of Architect's Substantial Completion inspection list of items to be completed or corrected (punch list), endorsed and dated by Architect. The certified copy of the list shall state that each item has been completed or otherwise resolved for acceptance.
3. Submit evidence of final, continuing insurance coverage complying with insurance requirements.
4. Submit pest-control final inspection report and warranty.
5. Instruct Owner's personnel in operation, adjustment, and maintenance of products, equipment, and systems.

B. Inspection: Submit a written request for final inspection for acceptance. On receipt of request, Architect will either proceed with inspection or notify Contractor of unfulfilled requirements. Architect will prepare a final Certificate for Payment after inspection or will notify Contractor of construction that must be completed or corrected before certificate will be issued.

1. Reinspection: Request reinspection when the Work identified in previous inspections as incomplete is completed or corrected.

1.5 LIST OF INCOMPLETE ITEMS (PUNCH LIST)

A. Preparation: Submit three copies of list. Include name and identification of each space and area affected by construction operations for incomplete items and items needing correction including, if necessary, areas disturbed by Contractor that are outside the limits of construction.

1. Organize list of spaces in sequential order, starting with exterior areas first and proceeding from lowest floor to highest floor, unless otherwise directed.
2. Organize items applying to each space by major element, including categories for ceiling, individual walls, floors, equipment, and building systems.
3. Include the following information at the top of each page:
   a. Project name.
   b. Date.
   c. Name of Architect.
   d. Name of Contractor.
   e. Page number.

1.6 WARRANTIES

A. Submittal Time: Submit written warranties on request of Architect for designated portions of the Work where commencement of warranties other than date of Substantial Completion is indicated.

B. Organize warranty documents into an orderly sequence based on the table of contents of the Project Manual.
   1. Bind warranties and bonds in heavy-duty, 3-ring, vinyl-covered, loose-leaf binders, thickness as necessary to accommodate contents, and sized to receive 8-1/2-by-11-inch paper.
   2. Provide heavy paper dividers with plastic-covered tabs for each separate warranty. Mark tab to identify the product or installation. Provide a typed description of the product or installation, including the name of the product and the name, address, and telephone number of Installer.
   3. Identify each binder on the front and spine with the typed or printed title "WARRANTIES," Project name, and name of Contractor.

C. Provide additional copies of each warranty to include in operation and maintenance manuals.

PART 2 - PRODUCTS

2.1 MATERIALS

A. Cleaning Agents: Use cleaning materials and agents recommended by manufacturer or fabricator of the surface to be cleaned. Do not use cleaning agents that are potentially hazardous to health or property or that might damage finished surfaces.

PART 3 - EXECUTION

3.1 FINAL CLEANING

A. General: Provide final cleaning. Conduct cleaning and waste-removal operations to comply with local laws and ordinances and Federal and local environmental and antipollution regulations.

B. Cleaning: Employ experienced workers or professional cleaners for final cleaning. Clean each surface or unit to condition expected in an average commercial building cleaning and maintenance program. Comply with manufacturer's written instructions.
   1. Complete the following cleaning operations before requesting inspection for certification of Substantial Completion for entire Project or for a portion of Project:
      a. Clean Project site, yard, and grounds, in areas disturbed by construction activities, including landscape development areas, of rubbish, waste material, litter, and other foreign substances.
      b. Sweep paved areas broom clean. Remove petrochemical spills, stains, and other foreign deposits.
      c. Rake grounds that are neither planted nor paved to a smooth, even-textured surface.
      d. Remove tools, construction equipment, machinery, and surplus material from Project sites.
      e. Remove snow and ice to provide safe access to each site.
      f. Clean exposed exterior and interior hard-surfaced finishes to a dirt-free condition, free of stains, films, and similar foreign substances. Avoid disturbing natural weathering of exterior surfaces. Restore reflective surfaces to their original condition.
      g. Remove debris and surface dust from limited access spaces, including roofs, plenums, shafts, trenches, equipment vaults, manholes, attics, and similar spaces.

h. Sweep concrete floors broom clean in unoccupied spaces.

i. Vacuum carpet and similar soft surfaces, removing debris and excess nap; shampoo if visible soil or stains remain.

j. Clean transparent materials, including mirrors and glass in doors and windows. Remove glazing compounds and other noticeable, vision-obscuring materials. Replace chipped or broken glass and other damaged transparent materials. Polish mirrors and glass, taking care not to scratch surfaces.

k. Remove labels that are not permanent.

l. Touch up and otherwise repair and restore marred, exposed finishes and surfaces. Replace finishes and surfaces that cannot be satisfactorily repaired or restored or that already show evidence of repair or restoration.

1) Do not paint over "UL" and similar labels, including mechanical and electrical nameplates.

m. Wipe surfaces of mechanical and electrical equipment, elevator equipment, and similar equipment. Remove excess lubrication, paint and mortar droppings, and other foreign substances.

n. Replace parts subject to unusual operating conditions.

o. Clean plumbing fixtures to a sanitary condition, free of stains, including stains resulting from water exposure.

p. Replace disposable air filters and clean permanent air filters. Clean exposed surfaces of diffusers, registers, and grills.

q. Clean ducts, blowers, and coils if units were operated without filters during construction.

r. Clean light fixtures, lamps, globes, and reflectors to function with full efficiency. Replace burned-out bulbs, and those noticeably dimmed by hours of use, and defective and noisy starters in fluorescent and mercury vapor fixtures to comply with requirements for new fixtures.

s. Leave Project clean and ready for occupancy.

C. Comply with safety standards for cleaning. Do not burn waste materials. Do not bury debris or excess materials on Owner's property. Do not discharge volatile, harmful, or dangerous materials into drainage systems. Remove waste materials from Project site and dispose of lawfully.

END OF SECTION 017700

SECTION 017839 - PROJECT RECORD DOCUMENTS

PART 1 - GENERAL

1.1 RELATED DOCUMENTS

A. Drawings and general provisions of the Contract, including General and Supplementary Conditions and other Division 01 Specification Sections, apply to this Section.

1.2 SUMMARY

A. This Section includes administrative and procedural requirements for Project Record Documents, including the following:
   1. Record Drawings.
   2. Record Specifications.
   3. Record Product Data.

B. Related Sections include the following:
   1. Division 01 Section "Closeout Procedures" for general closeout procedures.

1.3 SUBMITTALS

A. Record Drawings: Comply with the following:
   1. Number of Copies: Submit one set of marked-up Record Prints.

B. Record Specifications: Submit one copy of Project's Specifications, including addenda and contract modifications.

C. Record Product Data: Submit one copy of each Product Data submittal.
   1. Where Record Product Data is required as part of operation and maintenance manuals, submit marked-up Product Data as an insert in manual instead of submittal as Record Product Data.

PART 2 - PRODUCTS

2.1 RECORD DRAWINGS

A. Record Prints: Maintain one set of blue- or black-line white prints of the Contract Drawings and Shop Drawings.
   1. Preparation: Mark Record Prints to show the actual installation where installation varies from that shown originally. Require individual or entity who obtained record data, whether individual or entity is Installer, subcontractor, or similar entity, to prepare the marked-up Record Prints.
      a. Give particular attention to information on concealed elements that would be difficult to identify or measure and record later.
      b. Accurately record information in an understandable drawing technique.
      c. Record data as soon as possible after obtaining it. Record and check the markup before enclosing concealed installations.
   2. Content: Types of items requiring marking include, but are not limited to, the following:

© THE ROBINSON GREEN BERETTA CORPORATION – 6060-9007

a. Dimensional changes to Drawings.
b. Revisions to details shown on Drawings.
c. Actual equipment locations.
d. Changes made by Change Order.
e. Changes made following Architect's written orders.
f. Details not on the original Contract Drawings.
g. Field records for variable and concealed conditions.
h. Record information on the Work that is shown only schematically.

3. Mark the Contract Drawings or Shop Drawings, whichever is most capable of showing actual physical conditions, completely and accurately. If Shop Drawings are marked, show cross-reference on the Contract Drawings.
4. Mark record sets with erasable, red-colored pencil. Use other colors to distinguish between changes for different categories of the Work at same location.
5. Mark important additional information that was either shown schematically or omitted from original Drawings.
6. Note Construction Change Directive numbers, alternate numbers, Change Order numbers, and similar identification, where applicable.

B. Record Transparencies: Immediately before inspection for Certificate of Substantial Completion, review marked-up Record Prints with Architect. When authorized, prepare a full set of corrected transparencies of the Contract Drawings and Shop Drawings.
1. Incorporate changes and additional information previously marked on Record Prints. Erase, redraw, and add details and notations where applicable.
2. Refer instances of uncertainty to Architect for resolution.
3. Owner will furnish Contractor one set of transparencies of the Contract Drawings for use in recording information.
4. Print the Contract Drawings and Shop Drawings for use as Record Transparencies. Architect will make the Contract Drawings available to Contractor's print shop.

C. Record CAD Drawings: Immediately before inspection for Certificate of Substantial Completion, review marked-up Record Prints with Architect. When authorized, prepare a full set of corrected CAD Drawings of the Contract Drawings, as follows:
1. Format: Same CAD program, version, and operating system as the original Contract Drawings.
2. Format: DWG, Version 2004, operating in Microsoft Windows operating system.
3. Incorporate changes and additional information previously marked on Record Prints. Delete, redraw, and add details and notations where applicable.
4. Refer instances of uncertainty to Architect for resolution.
5. Architect will furnish Contractor one set of CAD Drawings of the Contract Drawings for use in recording information.
a. Architect makes no representations as to the accuracy or completeness of CAD Drawings as they relate to the Contract Drawings.
b. CAD Software Program: The Contract Drawings are available in AutoCad 2010.

D. Format: Identify and date each Record Drawing; include the designation "PROJECT RECORD DRAWING" in a prominent location.
1. Record Prints: Organize Record Prints and newly prepared Record Drawings into manageable sets. Bind each set with durable paper cover sheets. Include identification on cover sheets.
2. Record Transparencies: Organize into unbound sets matching Record Prints. Place transparencies in durable tube-type drawing containers with end caps. Mark end cap of each container with identification. If container does not include a complete set, identify Drawings included.
3. Record CAD Drawings: Organize CAD information into separate electronic files that correspond to each sheet of the Contract Drawings. Name each file with the sheet identification. Include identification in each CAD file.

© THE ROBINSON GREEN BERETTA CORPORATION – 6060-9007

4. Identification: As follows:
   a. Project name.
   b. Date.
   c. Designation "PROJECT RECORD DRAWINGS."
   d. Name of Architect.
   e. Name of Contractor.

2.2 RECORD SPECIFICATIONS

A. Preparation: Mark Specifications to indicate the actual product installation where installation varies from that indicated in Specifications, addenda, and contract modifications.
   1. Give particular attention to information on concealed products and installations that cannot be readily identified and recorded later.
   2. For each principal product, indicate whether Record Product Data has been submitted in operation and maintenance manuals instead of submitted as Record Product Data.
   3. Note related Change Orders, Record Product Data, and Record Drawings where applicable.

2.3 RECORD PRODUCT DATA

A. Preparation: Mark Product Data to indicate the actual product installation where installation varies substantially from that indicated in Product Data submittal.
   1. Give particular attention to information on concealed products and installations that cannot be readily identified and recorded later.
   2. Include significant changes in the product delivered to Project site and changes in manufacturer's written instructions for installation.
   3. Note related Change Orders, Record Specifications, and Record Drawings where applicable.

2.4 MISCELLANEOUS RECORD SUBMITTALS

A. Assemble miscellaneous records required by other Specification Sections for miscellaneous record keeping and submittal in connection with actual performance of the Work. Bind or file miscellaneous records and identify each, ready for continued use and reference.

PART 3 - EXECUTION

3.1 RECORDING AND MAINTENANCE

A. Recording: Maintain one copy of each submittal during the construction period for Project Record Document purposes. Post changes and modifications to Project Record Documents as they occur; do not wait until the end of Project.

B. Maintenance of Record Documents and Samples: Store Record Documents and Samples in the field office apart from the Contract Documents used for construction. Do not use Project Record Documents for construction purposes. Maintain Record Documents in good order and in a clean, dry, legible condition, protected from deterioration and loss. Provide access to Project Record Documents for Architect's reference during normal working hours.

END OF SECTION 017839

© THE ROBINSON GREEN BERETTA CORPORATION – 6060-9007

SECTION 311000 - SITE CLEARING

PART 4 - GENERAL

4.1 RELATED DOCUMENTS

A. Drawings and general provisions of the Contract, including General and Supplementary Conditions and Division 01 Specification Sections, apply to this Section.

4.2 DESCRIPTION OF WORK:

A. Site clearing operations include, but are not limited to:
   1. Protection of trees indicated to remain.
   2. Removal of certain indicated trees and other vegetation.
   3. Topsoil stripping.
   4. Removing above-grade improvements.

B. RELATED WORK UNDER OTHER SECTIONS:

   1. Earthwork - Section 315000.

4.3 INFORMATIONAL SUBMITTALS

A. Existing Conditions: Documentation of existing trees and plantings, adjoining construction, and site improvements that establishes preconstruction conditions that might be misconstrued as damage caused by site clearing.
   1. Use sufficiently detailed photographs or videotape.
   2. Include plans and notations to indicate specific wounds and damage conditions of each tree or other plants designated to remain.

4.4 PROJECT CONDITIONS:

A. Traffic: Minimize interference with adjoining roads, streets, walks, and other adjacent occupied or used facilities during site-clearing operations.
   1. Do not close or obstruct streets, walks, or other adjacent occupied or used facilities without permission from Owner and authorities having jurisdiction.
   2. Provide alternate routes around closed or obstructed traffic ways if required by Owner or authorities having jurisdiction.
   3. Provide police details for traffic control, if working in or from the roadway.

B. Utility Locator Service: Notify Dig Safe and non dig-safe utilities for area where Project is located before site clearing.

C. Protection of Existing Improvements:
   1.
   2. Provide barricades, coverings, and other types of protection to prevent damage to existing improvements indicated to remain in place.
   3. Protect improvements on adjoining properties as well as those on the Owner's property.
   4. Restore any improvements damaged, to their original condition, as acceptable to the Owners or other parties or authorities having jurisdiction.

© THE ROBINSON GREEN BERETTA CORPORATION – 6060-9007

D. Protection of Existing Trees and Vegetation:

1. Protect existing trees and other vegetation indicated to remain, against unnecessary cutting, breaking or skinning of roots, skinning or bruising of bark, smothering of trees by stockpiling construction materials or excavated materials within drip line, excess foot or vehicular traffic, or parking of vehicles within drip line. Provide temporary fences, barricades or guards to protect trees and vegetation to be left standing.

2. Provide protection for roots over 1-1/2" diameter that are cut during construction operations. Coat the cut faces with an emulsified asphalt, or other acceptable coating, especially formulated for horticultural use on cut or damaged plant tissues. Temporarily cover all exposed roots with wet burlap to prevent roots from drying out; provide earth cover as soon as possible.

3. Repair or replace trees and vegetation damaged by construction operations. Tree damage repair shall be performed by a qualified tree surgeon. Replace trees which cannot be repaired and restored to full-growth status, as determined by the tree surgeon.

PART 5 - PRODUCTS

NOT APPLICABLE.

PART 6 - EXECUTION

6.1 SITE CLEARING:

A. General:

1. Remove trees, shrubs, grass, weeds and other vegetation, improvements and obstructions that interfere with installation of new construction. Also, remove such items elsewhere on the site or premises as specifically indicated. Removal includes new and old stumps of trees and their roots. Carefully and cleanly cut roots and branches of trees indicated to be left standing, where such roots and branches obstruct new construction.

B. Topsoil Removal:

1. Remove sod and grass before stripping topsoil.
2. Topsoil is defined as friable clay loam surface soil found in a depth of not less than 4". Satisfactory topsoil is reasonably free of subsoil, clay lumps, stones, and other objects over 2" in diameter and without weeds, roots, and other objectionable material.

3. Strip topsoil, subsoil and unsuitable materials to whatever depths encountered, in such manner so as to prevent intermingling with the underlying subsoil or other objectionable material. Remove heavy growths of grass from areas before stripping.

   a. Where trees are indicated or specified to be left standing, stop topsoil stripping a sufficient distance from such trees to prevent damage to the main root system.

C. Removal of Above-Grade Improvements:

1. Remove surfacing and pavements, including bases for pavements, concrete slabs, walks, posts, poles, and other work as specifically indicated.

2. Unless existing full-depth joints coincide with line of demolition, neatly saw-cut along line of existing pavement to remain before removing adjacent existing pavement. Saw-cut faces vertically.
3. Paint cut ends of steel reinforcement in concrete to remain with two coats of antirust coating, following coating manufacturer's written instructions. Keep paint off surfaces that will remain exposed.

6.2 DISPOSAL OF SURPLUS AND WASTE MATERIALS:

A. Burning on Property:

1. Burning of combustible cleared and grubbed materials is not permitted on the property.

B. Removal from Property:

1. Remove surplus soil material, unsuitable topsoil, obstructions, demolished materials, and waste materials including trash and debris, and legally dispose of them off the property.

END OF SECTION 311000

© THE ROBINSON GREEN BERETTA CORPORATION – 6060-9007

SECTION 315000 - EARTHWORK

PART 7 - GENERAL

7.1 RELATED DOCUMENTS

A. Drawings and general provisions of the Contract, including General and Supplementary Conditions and Division 01 Specification Sections, apply to this Section.

7.2 DESCRIPTION OF WORK:

A. Excavation for sidewalks, rough and fine grading. Excavation of all trades is included herein.

B. Provide additional material hereinafter specified or needed for fills. Remove from site excess material and that which is unsuitable for filling, and legally dispose of it.

C. Backfilling (including all trades).

D. Compact fills as hereinafter specified.

E. Repair any major deformations caused by the removal of large boulders, cave-ins, etc., with concrete, compacted bank run gravel or crushed stone.

F. Protection and Precautionary Measurements:

1. Protect active pipes, if encountered, and notify persons owning same. If encountered, remove inactive utilities from within building lines. Plug or cap where indicated or directed.

2. Protect persons and property from damage and discomfort caused by dust. Water as necessary to quell dust.

G. Erosion Control:

1. Employ satisfactory methods and operations to minimize erosion of soil during earthwork operations. Follow accepted standards of the RIDOT for erosion control.

H. Tree Planting:
1. Street tree supply and installation
2. Water, mulch and fertilize provisions for trees, shrubs, grass, and ground cover.
3. Provide and install grass for disturbed area, match existing grass type.
4. Saw cut for tree pits.
5. Maintain newly installed trees and vegetation for One (1) year from substantial completion.

7.3 REFERENCES

A. The City of Providence, RI, Department of Public Works, Tree Plan Requirements, Landscaping and Tree Preservation – Zoning Ordinance, Section 425 and specifications.

B. Approved Tree list from the City of Providence revised July 2011, included in this section.

7.4 RELATED WORK UNDER OTHER SECTIONS:

A. Site clearing - Section 311000.

7.5 QUALITY ASSURANCE:

A. Code and Standards: Perform excavation work in compliance with applicable requirement of governing authorities having jurisdiction.

B. All material limits shall be constructed within a vertical tolerance of 0.1 foot and a horizontal tolerance of 1 foot except where dimensions or grades are shown or specified as minimum. All grading shall be performed to maintain slopes and drainage as shown. No reverse slopes will be permitted.

7.6 REQUIREMENTS:

A. No material excavated or processed from the NBC tunnel project shall be used on this site.

B. One gradation curve and moisture-density curve for each type of material specified or proposed for use for approval. (AASHTO T-27 and AASHTO T-180)

C. All unsatisfactory work and any settlement within one (1) year of final acceptance shall be removed, replaced and retested at the Contractor's expense.

7.7 MISCELLANEOUS REQUIREMENTS:

A. Traffic: Conduct operations and the removal of debris to ensure minimum interference with roads, streets, walks and other adjacent occupied or used facilities.

1. Do not close or obstruct streets, walks or other occupied or used facilities without permission from authorities having jurisdiction. Provide alternate routes around closed or obstructed traffic ways if required by governing regulations.

2. Provide all traffic control required and pay all costs incurred.

B. Damages: Promptly repair damages caused to adjacent facilities by operations, as directed and at no additional cost.

PART 8 - PRODUCTS

PART 9 - EXECUTION

9.1 EXCAVATIONS:

A. General Open Earth Excavation:

1. Excavate as necessary for work shown or specified. Remove earth, rocks, boulders, and other obstructions as herein defined.

2. Allow ample space for form work.

3. Leave bearing surfaces undisturbed, level and true. Excavate to solid bearing at elevations no higher than those shown.

B. Excavation of Existing Pavement:

1. Remove all areas of existing pavement as indicated and as required for the construction of the work under the contract. Where excavation of existing roadway or sidewalk pavement is required, saw cut the existing pavement and remove, to the extent required by the local authorities, leaving straight vertical edges. Any existing pavements beyond these lines so established, which is damaged, or destroyed by the Contractor shall be replaced after the backfill has been placed and approved, restore the pavements to match existing pavements or as required by the local authorities and in an approved manner. All work to comply with local codes and ordinances having jurisdiction.

C. Stability of Excavations:

1. Slope sides of excavations to comply with local codes and ordinances having jurisdiction. Shore and brace where sloping is not possible either because of space restrictions or stability of material excavated.

2. Maintain sides and slopes of excavations in a safe condition until completion of backfilling.

3.

4. The Contractor shall be solely responsible for making all excavations in a safe manner. Provide appropriate measures to retain excavation side slopes and prevent earth slides to ensure that persons working in or near the excavation are protected.

D. Water and Frost:

1. Keep earth under slabs dry and free from frost.

2. Should bearing surfaces be softened by water or frost, re-excavate to solid bearing and fill with concrete or gravel as directed at no expense to Owner.

9.2 FILLING:

A. General:

1. Remove debris and organic matter before filling.

2. Use approved materials only for fills.

3. Obtain Architect's approval before filling.

4. Make fills as soon as feasible thereafter to insure maximum settlement.

5. Do not place fill on frozen ground.

6. Provide all material free from frost, roots and other vegetable matter, large rocks, rubbish, brick and other undesirable material.

7. Install fills in indicated thicknesses.

© THE ROBINSON GREEN BERETTA CORPORATION – 6060-9007

8. Provide neat, uniform side slopes (smooth and graded) to those excavations not required to be filled.

B. Fill Materials: Unless specifically shown otherwise, use the following materials:

1. "Bank Run Gravel" in pipe trenches, under concrete sidewalks, where indicated as "gravel fill", and where else shown, free from loam, recycled materials, and other specified undesirable material, and conforming to the following analysis:

Sieve Size	% Passing by Weight
3"	
1/2"	50-85
3/8"	45-80
#4	
#40	15-35
#200	0-8

a. On-site material may be used, only after satisfactory test data has been submitted, and only with the Architect's approval.

9.3 COMPACTION:

A. General:

1. Place fill in horizontal layers, beginning with the lowest areas and building up until the entire area to be filled is at a uniform elevation.

2. Compact each layer with an approved vibratory device to achieve minimum density requirements.

3. The resulting surface of the cut shall be compacted as required, to not less than 95% of maximum density.

4. Maximum density for compacted soils shall be determined by ASTM D 1557, Method C.

9.4 USE OF EXPLOSIVES:

A. The use of explosives will not be permitted.

B. Mechanical means shall be employed for rock removal.

C. Non explosives agents such as Bustar (formally called Bristar) may be used.

END OF SECTION 315000

© THE ROBINSON GREEN BERETTA CORPORATION – 6060-9007

SECTION 321313 - CONCRETE PAVING

PART 10 - GENERAL

10.1 RELATED DOCUMENTS

A. Drawings and general provisions of the Contract, including General and Supplementary Conditions and Division 01 Specification Sections, apply to this Section. All concrete paving work indicated on the drawings and herein specified.

10.2 SUMMARY

A. Section Includes:
   1. All concrete paving work (sidewalks, driveways) indicated on the drawings and herein specified.

B. Related Sections:
   1. Section 311000 – Site Clearing.
   2. Section 315000 - Earthwork for subgrade preparation, grading and subbase gravel course.
   3. Section 321723 – Pavement Markings.

10.3 REFERENCES:

A. Reference specifications and details hereinafter indicated are an integral part of this specification.

   1. State of Rhode Island Standard Specifications for Road and Bridge Construction, 2004 edition with changes, hereinafter referred to as the "State Specifications".
   2. Rhode Island Department of Transportation, Division of Public Works, Standard Details 1998 with changes, hereinafter referred to as the "Standard Details".

10.4 SUBMITTALS

A. General: Submit the following according to the Conditions of the Contract and Division 1 Specification Sections.

B. Product data for proprietary materials and items, including reinforcement and forming accessories, seeded aggregate, admixtures, joint systems, curing compounds, dry-shake finish materials, and others if requested by Engineer.

C. Design mixes for each class of concrete. Include revised mix proportions when characteristics of materials, project conditions, weather, test results, or other circumstances warrant adjustments.

D. Laboratory test reports for evaluation of concrete materials and mix design tests.

E. Material certificates in lieu of material laboratory test reports when permitted by Engineer. Material certificates shall be signed by manufacturer and Contractor certifying that each material

item complies with or exceeds requirements. Provide certification from admixture manufacturers that chloride content complies with requirements.

10.5 QUALITY ASSURANCE:

A. Qualifications: The foreman and labors shall be thoroughly trained and experienced in the skills required to complete the work, be completely familiar with the design and application of the work, be present at all times during the work and perform the work. The foreman and labors shall have no less than 5 years minimum proven experience in the required paving techniques and desired results.

B. Submit catalog cuts or shop drawings for approval.

C. Provide copies of material certificates, certifying that each material item complies with or exceeds specified requirements.

D. Concrete Standards: Comply with provisions of the following standards, except where more stringent requirements are indicated.
   1. American Concrete Institute (ACI) 301, "Specifications for Structural Concrete for Buildings."
   2. ACI 318, "Building Code Requirements for Reinforced Concrete."
   3. Concrete Reinforcing Steel Institute (CRSI) "Manual of Standard Practice."

E. Concrete Manufacturer Qualifications: Manufacturer of ready-mixed concrete products complying with ASTM C 94 requirements for production facilities and equipment.

F. Concrete Testing Service: Engage a qualified independent testing agency to perform materials evaluation tests and to design concrete mixes.

10.6 PROJECT CONDITIONS

A. Traffic Control: Maintain access for vehicular and pedestrian traffic as required for other construction activities.

PART 11 - PRODUCTS

11.1 MATERIALS:

11.2 FORMS

A. Form Materials: Plywood, metal, metal-framed plywood, or other acceptable panel-type materials to provide full-depth, continuous, straight, smooth exposed surfaces.
   1. Use flexible or curved forms for curves of a 100-foot or less radius.

B. Form Release Agent: Provide commercial formulation form-release agent with a maximum of 350 g/L volatile organic compounds (VOCs) that will not bond with, stain, or adversely affect concrete surfaces and will not impair subsequent treatments of concrete surfaces.

11.3 REINFORCING MATERIALS

A. Welded Wire Fabric: Conforming to ASTM A-185, free of scale, rust, dirt, etc.

B. Deformed-Steel Welded Wire Reinforcement: ASTM A 497/A 497M, flat sheet, free of scale, rust, dirt, etc.

C. Reinforcing Bars: 60,000psi yield point steel, conforming to ASTM A-615, Grade 60, deformed. Bend, splice and place bars in accordance with American Concrete Institute requirements. Provide all bars, free of mill scale, rust, dirt and coatings that reduce bond.

D. Dowel Bars: ASTM A 615, Grade 60 plain-steel bars; zinc coated (galvanized) after fabrication according to ASTM A 767, Class I coating. Cut bars true to length with ends square and free of burrs.

E. Hook Bolts: ASTM A 307, Grade A bolts, internally and externally threaded. Design hook bolt joint assembly to hold coupling against pavement form and in position during concreting operations, and to permit removal without damage to concrete or hook bolt.

F. Supports for Reinforcement: Chairs, bolsters, spacers, dowel bar supports and other devices for spacing, supporting, and fastening reinforcing bars, welded wire fabric, and dowels in place. Use wire bar-type supports complying with CRSI specifications.
   1. Use supports with sand plates or horizontal runners where base material will not support chair legs.

11.4 CONCRETE MATERIALS

A. Portland Cement: ASTM C 150, Type I for resistance to salt and ice melt chemicals.
   1. Use one brand of cement throughout Project unless otherwise acceptable to Engineer.

B. Concrete Paving:

   1. Concrete: Materials to conform to RIDOT. Specifications, SEC 600, Section M.02. All concrete shall be certified 4,000 PSI strength (28 days). Use 4-6% air-entrained concrete when exposed to weather. A/E agent conforming to ASTM C-260. Ready mixed concrete shall also conform to ASTM C-94. Furnish certificates from mixing plant that concrete meets above requirements.
   2.
   3. Expansion Joints: 3/8" fiber filler, ASTM D 175, with polysulfide or silicone rubber sealant. Install "Ethafoam" rod between filler and sealant. Submit sample of materials for approval.

PART 12 - EXECUTION

12.1 INSTALLATION:

A. Concrete Paving:

   1. Place concrete on firm, moist compacted subgrade, with no pools of standing water. Pour no concrete on frozen subgrade, or when atmospheric temperature is below freezing.
   2.
   3. Comply with ACI 304R requirements for measuring, mixing, transporting, placing, and consolidating concrete.

4.
5. Deposit and spread concrete in a continuous operation between transverse joints. Do not push or drag concrete into place or use vibrators to move concrete into place.
6.
7. Place tops of forms at exact finished grade. Forms: clean, true to line and firmly staked. They must resist concrete pressure without springing and be sufficiently tight to prevent concrete leakage.
8.
9. Spade concrete thoroughly along forms, separation plates and expansion joints. Tamp and screed to dense mass. Finish surface as detailed or specified. Round all edges to 1/2" radius unless otherwise detailed.
10.
11. Remove forms as promptly as practical, correct defects and rub down until surface is entirely smooth, unless otherwise detailed. Plastering not permitted.
12.
13. Walks: Expansion joint at maximum 20 ft. intervals, coinciding with pattern shown. Finish: fine broom finish. Color: light gray, consistent throughout entire walk system.
14.
15. Slabs: In mass concrete areas, pour in alternate sections of not more than 400 square feet. Provide expansion joints between pours following indicated pattern.
16.
17. Expansion Joints: form by using 3/8" fiber filler, Ethafoam rod and silicone rubber sealant. Install filler 1/4" below finished concrete.
18.
19. Control Joints: Form between expansion joints as detailed.
20.
21. Provide expansion joints at pavement junction with concrete walks, top and bottom steps, at buildings, walls and other structures.

22. At points where changes in rate of grades is more than 2 percent, introduce approved vertical curve. No abrupt changes in grade will be accepted.
23.
24. Where walks terminate at curbs, finish walk 1/4" above curb providing neat bevel.
25.
26. Permit no pedestrian traffic on concrete pavement for three days after pouring.
27.
28. Score lines and joints shall be straight or true to radius shown, cleanly executed with proper tools. Poor workmanship is just cause for rejection of concrete walks. Rejected pavement must be removed and replaced as directed at no extra cost to the Owner.

B. Cold-Weather Placement: Comply with provisions of ACI 306R and as follows. Protect concrete work from physical damage or reduced strength that could be caused by frost, freezing actions, or low temperatures.
1. When air temperature has fallen to or is expected to fall below 40 deg F (4 deg C), uniformly heat water and aggregates before mixing to obtain a concrete mixture temperature of not less than 50 deg F (10 deg C) and not more than 80 deg F (27 deg C) at point of placement.
2. Do not use frozen materials or materials containing ice or snow.
3. Do not use calcium chloride, salt, or other materials containing antifreeze agents or chemical accelerators unless otherwise accepted in mix designs.

C. Hot-Weather Placement: Place concrete complying with ACI 305R and as specified when hot weather conditions exist.
1. Cool ingredients before mixing to maintain concrete temperature at time of placement to below 90 deg F (32 deg C). Mixing water may be chilled or chopped ice may be used to

control temperature, provided water equivalent of ice is calculated to total amount of mixing water. Using liquid nitrogen to cool concrete is Contractor's option.

2. Cover reinforcing steel with water-soaked burlap if it becomes too hot, so that steel temperature will not exceed the ambient air temperature immediately before embedding in concrete.
3. Fog spray forms, reinforcing steel, and subgrade just before placing concrete. Keep subgrade moisture uniform without standing water, soft spots, or dry areas.

12.2 CONCRETE FINISHING

A. Broom Finish: Apply a broom finish to exterior concrete platforms, steps, and ramps, and elsewhere as indicated.
   1. Immediately after float finishing, slightly roughen trafficked surface by brooming with fiber-bristle broom perpendicular to main traffic route. Coordinate required final finish with Engineer before application.

B. Float Finish: Begin floating when bleed water sheen has disappeared and the concrete surface has stiffened sufficiently to permit operations. Float surface with power-driven floats, or by hand floating if area is small or inaccessible to power units. Finish surfaces to true planes within a tolerance of 1/4 inch in 10 feet as determined by a 10-foot-long straightedge placed anywhere on the surface in any direction. Cut down high spots and fill low spots. Re-float surface immediately to a uniform granular texture.

C. Tooling: Tool edges of paving, gutters, curbs, and joints formed in fresh concrete with a jointing tool to the following radius. Repeat tooling of edges and joints after applying surface finishes. Eliminate tool marks on concrete surfaces.
   1. Radius: 1/4 inch.
   2. Radius: 3/8 inch.

12.3 CONCRETE PROTECTION AND CURING

A. General: Protect freshly placed concrete from premature drying and excessive cold or hot temperatures. Comply with the recommendations of ACI 306R for cold weather protection and ACI 305R for hot weather protection during curing.

B. Evaporation Control: In hot, dry, and windy weather, protect concrete from rapid moisture loss before and during finishing operations with an evaporation-control material. Apply according to manufacturer's instructions after screeding and bull floating, but before floating.

C. Begin curing after finishing concrete but not before free water has disappeared from concrete surface.

D. When atmospheric temperature falls below 40 degrees F. maintain concrete at temperature of at least 50 degrees F. for 5 days after pouring. (3 days when High Early Strength Concrete is used.)

E. Curing Methods: Cure concrete by moisture curing, moisture-retaining-cover curing, curing compound, or a combination of these as follows:
   1. Moisture Curing: Keep surfaces continuously moist for not less than 7 days with the following materials:
      a. Water.
      b. Continuous water-fog spray.

© THE ROBINSON GREEN BERETTA CORPORATION – 6060-9007

c. Absorptive cover, water saturated, and kept continuously wet. Cover concrete surfaces and edges with a 12-inch lap over adjacent absorptive covers.

2. Moisture-Retaining-Cover Curing: Cover concrete surfaces with moisture-retaining cover for curing concrete, placed in widest practicable width, with sides and ends lapped at least 12 inches, and sealed by waterproof tape or adhesive. Immediately repair any holes or tears during curing period using cover material and waterproof tape.

3. Curing Compound: Apply uniformly in continuous operation by power spray or roller according to manufacturer's directions. Recoat areas subjected to heavy rainfall within 3 hours after initial application. Maintain continuity of coating and repair damage during curing period.

F. Protection and Cleaning:

1. Protect all finished concrete work from damage due to subsequent construction operations. Leave all concrete clean at the completion of the work.

12.4 PAVING TOLERANCES

A. Comply with tolerances in ACI 117 and as follows:

1. Elevation: 3/4 inch.
2. Thickness: Plus 3/8 inch, minus 1/4 inch.
3. Surface: Gap below 10-foot- long, unleveled straightedge not to exceed 1/2 inch.
4. Joint Spacing: 3 inches.
5. Contraction Joint Depth: Plus 1/4 inch, no minus.
6. Joint Width: Plus 1/8 inch, no minus.

12.5 REPAIRS AND PROTECTION

A. Remove and replace concrete paving that is broken, damaged, or defective or that does not comply with requirements in this Section. Remove work in complete sections from joint to joint unless otherwise approved by Engineer.

B. Protect concrete paving from damage. Exclude traffic from paving for at least 14 days after placement. When construction traffic is permitted, maintain paving as clean as possible by removing surface stains and spillage of materials as they occur.

C. Maintain concrete paving free of stains, discoloration, dirt, and other foreign material. Sweep paving not more than two days before date scheduled for Substantial Completion inspections.

END OF SECTION 321313

© THE ROBINSON GREEN BERETTA CORPORATION – 6060-9007

SECTION 321723 - PAVEMENT MARKINGS

PART 13 - GENERAL

13.1 RELATED DOCUMENTS

A. Drawings and general provisions of the Contract, including General and Supplementary Conditions and Division 01 Specification Sections, apply to this Section.

13.2 SUMMARY

A. Section includes painted markings applied to asphalt pavement.

13.3 RELATED WORK UNDER OTHER SECTIONS:

A. Concrete Paving – Section 321313.

13.4 REFERENCES:

A. Reference specifications and details hereinafter indicated are an integral part of this specification.

1. State of Rhode Island Standard Specifications for Road and Bridge Construction, 2004 edition with changes, hereinafter referred to as the "State Specifications".

2. Rhode Island Department of Transportation, Division of Public Works, Standard Details 1998 with changes, hereinafter referred to as the "Standard Details".

13.5 PRE-INSTALLATION MEETINGS

A. Pre-installation Conference: Conduct conference at Project site.
   1. Review methods and procedures related to marking pavement including, but not limited to, the following:
      a. Pavement aging period before application of pavement markings.

13.6 ACTION SUBMITTALS

A. Product Data: For each type of product.
   1. Include technical data and tested physical and performance properties.

B. Shop Drawings: For pavement markings.
   1. Indicate pavement markings, colors, lane separations, defined parking spaces, and dimensions to adjacent work.
   2.
   3. Indicate, with international symbol of accessibility, spaces allocated for people with disabilities.

C. Samples: For each exposed product and for each color and texture specified; on rigid backing, 8 inches square.

13.7 QUALITY ASSURANCE

A. For information only, submit copies of manufacturer's technical information including paint label analysis and application instructions for painted lines. Transmit a copy of each manufacturer's instructions to the paint applicator.

PART 14 - PRODUCTS

14.1 MANUFACTURERS

A. Manufacturers: Subject to compliance with requirements, available manufacturers offering products that may be incorporated into the Work include, but are not limited to, the following:
   1. Benjamin Moore & Company
   2. Pratt & Lambert
   3. Sherwin-Williams Company

14.2 PAVEMENT-MARKING PAINT

A. Traffic paint conforming to RIDOT Specification M17.02 and T.20.03.3. Submit manufacturer's specifications for approval. 4” wide lines unless noted otherwise.
   1. Color: As indicated or selected by the Engineer..

PART 15 - EXECUTION

15.1 examination

A. Verify that pavement is dry and in suitable condition to begin pavement marking according to manufacturer's written instructions.

B. Proceed with pavement marking only after unsatisfactory conditions have been corrected.

15.2 PAVEMENT MARKINGS

A. Do not apply pavement-marking paint until layout, colors, and placement have been verified with Architect.

B. On new paving, allow paving to age for a minimum of 30 days before starting pavement marking.

C. Sweep and clean surface to eliminate loose material and dust.

D. Apply paint with mechanical equipment to produce pavement markings, of dimensions indicated, with uniform, straight edges. Apply at manufacturer's recommended rates to provide a minimum wet film thickness of 15 mils (0.4 mm).

1. Apply graphic symbols and lettering with paint-resistant, die-cut stencils, firmly secured to pavement. Mask an extended area beyond edges of each stencil to prevent paint application beyond the stencil. Apply paint so that it cannot run beneath the stencil.

15.3 Protecting and Cleaning

A. Protect pavement markings from damage and wear during remainder of construction period.

B. Clean spillage and soiling from adjacent construction using cleaning agents and procedures recommended by manufacturer of affected construction

C.

END OF SECTION 321723

© THE ROBINSON GREEN BERETTA CORPORATION – 6060-9007

RI PUBLIC TRANSIT AUTHORITY

RHODE ISLAND PUBLIC TRANSIT AUTHORITY

RIPTA R - LINE STATIONS
PROVIDENCE/PAWTUCKET, RI

50 Holden Street · Providence, Rhode Island 02908
www.rgb.net

Architecture · Engineering · Interior Design

RGB

THE ROBINSON GREEN BERETTA CORPORATION — ARCHITECTURE

C.A. PRETZER ASSOCIATES, INC. — STRUCTURAL ENGINEERING

LIST OF DRAWINGS

1	BROAD AT MONTGOMERY
2	BROAD AT CARR_CALLA
3	ROGER WILLIAMS PARK
4	BROAD AT EARLY
5	BROAD AT THURBERS
6	BROAD AT ONTARIO
7	BROAD AT PUBLIC
8	BROAD AT PARKIS
9	TRINITY SQUARE
10	BROAD AT LOCKWOOD
11	DEXTER MANOR
12	EMPIRE AT WESTMINSTER
15	ROGER WILLIAMS NATIL. MEMORIAL
16	UNIVERSITY MARKET
17	CHARLESGATE
18	NORTH MAIN AT CYPRESS
19	NORTH MAIN AT ROCHAMBEAU
20	NORTH MAIN AT THIRD
21	NORTH MAIN AT NINTH
22	MAIN AT GREENVILLE
23	HOPE ARTISTE VILLAGE
24	MAIN AT SAYLES
25	MAIN AT WHITMAN
26	MAIN AT PEARL
27	COLLYER PARK
28	MAIN AT GOFF
29	DETAILS
30	FOOTING DETAILS

RIPTA - 6060-0007

ABBREVIATIONS

ABB	DESCRIPTION	ABB	DESCRIPTION
CC	EXISTING CURB CUT	OL	EXIST.OVERHEAD LINE
EC	EXISTING CURB	TYP	TYPICAL
STS	EXISTING STOP SIGN	PM	EXIST.PARKING METER
SS	EXISTING STREET SIGN	EM	EXIST.ELECTRIC METER
LP	EXISTING LIGHT POLE	SE	EXIST.SIDEWALK EDGE
SLP	EXIST.SIGNAL LIGHT POST	EXIST	EXISTING
SLC	EXIST.ST.LIGHT CONTROL	SE	EXIST.SIDEWALK EDGE
MH	EXISTING MANHOLE	G¢D	EXIST.GRATE ¢ DRAIN
WMH	EXIST.WATER MANHOLE	TC	TRASH CAN
EMH	EXIST.ELECTRIC MANHOLE	FSS	FREE STANDING SCREEN
SMH	EXIST.SIGNAL MANHOLE	B	BENCH
PMH	EXIST.CABLE MANHOLE	ETS	ENHANCED TRANSIT SIGN
FS	EXISTING FIRE SIGN	BR	BIKE RACK
FH	EXISTING FIRE HYDRANT	TVM	TICKET VENDING MACHINE
W	EXIST.WATER SHUT OFF	WFT	WAYFINDING TOTEM
TP	EXIST. TELEPHONE POST		
NPR	NO PARKING SIGN - ARROW POINTING RIGHT		
NPL	NO PARKING SIGN - ARROW POINTING LEFT		

STATUS: ISSUED FOR BID

DATE: FEBRUARY 10, 2014

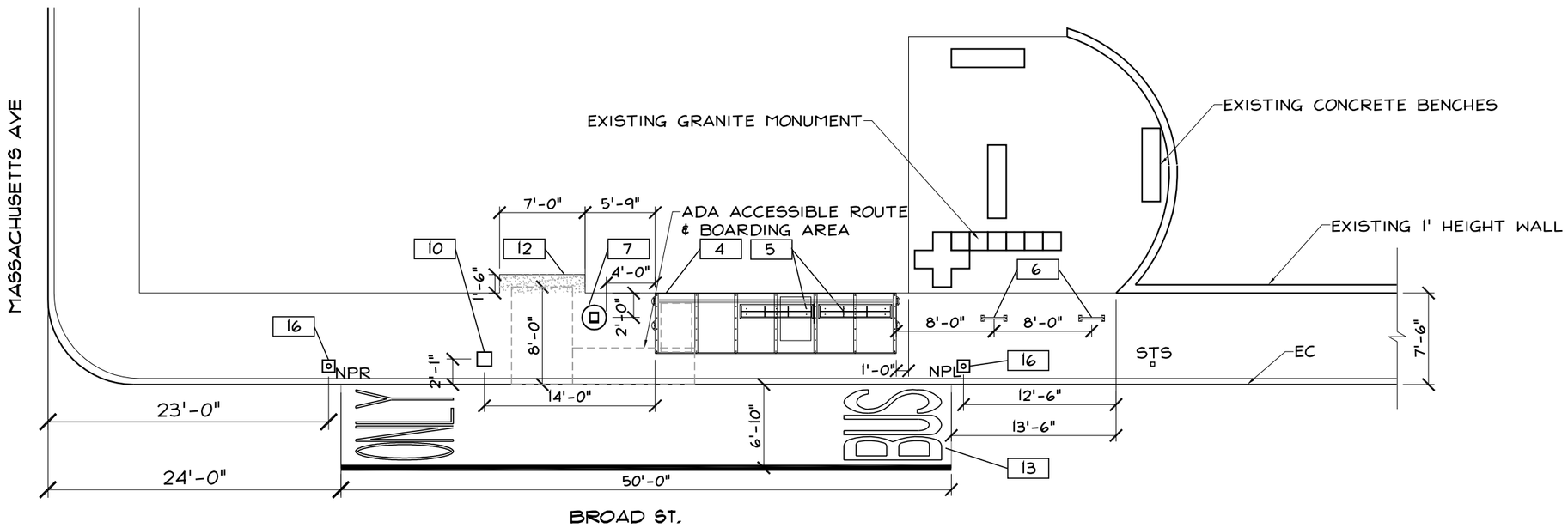

1 / 1 NORTH STOP

Scale: 3/32" = 1'-0"

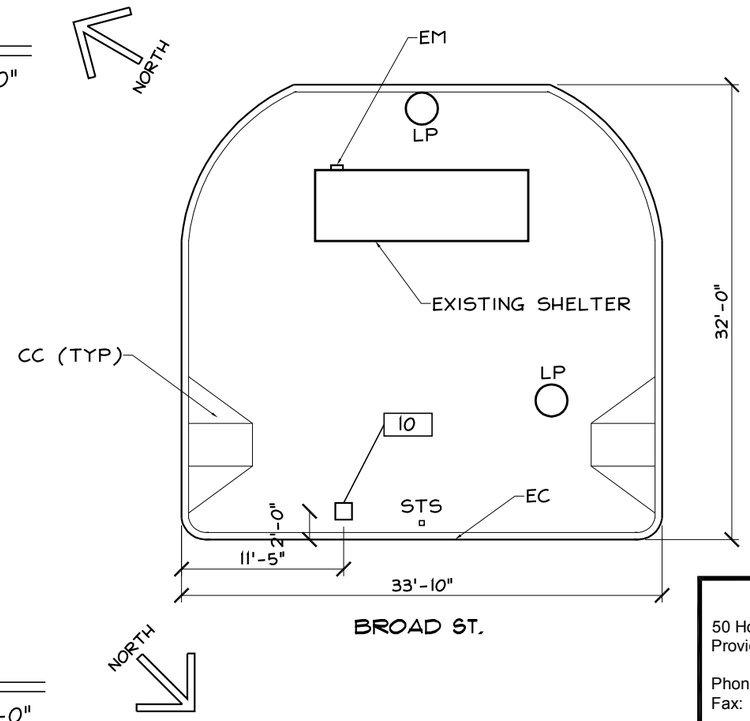

2 / 1 SOUTH STOP

Scale: 3/32" = 1'-0"

WORK NOTES

1	INSTALL NEW FOUR POST SHELTER
2	INSTALL NEW LARGE FOUR POST SHELTER
3	INSTALL NEW CANTILEVER SHELTER
4	INSTALL NEW LARGE CANTILEVER SHELTER
5	INSTALL NEW BENCH
6	INSTALL NEW BIKE RACK
7	INSTALL NEW TRASH CAN
8	INSTALL NEW ETS
9	INSTALL NEW FSS
10	INSTALL NEW WFT
11	INSTALL NEW TVM
12	PREP. & INSTALL NEW CONCRETE PAD
13	NEW STRIPING-SEE DETAIL 1/29
14	NOT IN CONTRACT - FUTURE NEW TREE AND CONC SIDEWALK WORK FOR TREE
15	EXISTING SHELTER TO BE REMOVE BY OTHERS
16	NEW NO PARKING SIGN WITH DIRECTIONAL ARROWS

NOTE: NORTH STOP IS AN ART SITE (SHELTER PANEL)

50 Holden Street
Providence, Rhode Island 02908

Phone: (401) 272-1730
Fax: (401) 273-7156

E-mail: rgbinfo@rgb.net
www.rgb.net

RGB

Architecture · Engineering · Interior Design

Project
RIPTA R-LINE STATIONS
BROAD - NORTH MAIN

RIPTA
RHODE ISLAND PUBLIC TRANSIT AUTHORITY

PROVIDENCE / PAWTUCKET, RI

Contents
BROAD AT MONTGOMERY

Project No.	6060	Drawing No.	1
Checked by	JRR		
Issued	FEB 10 2014	Sheet 1	of 28

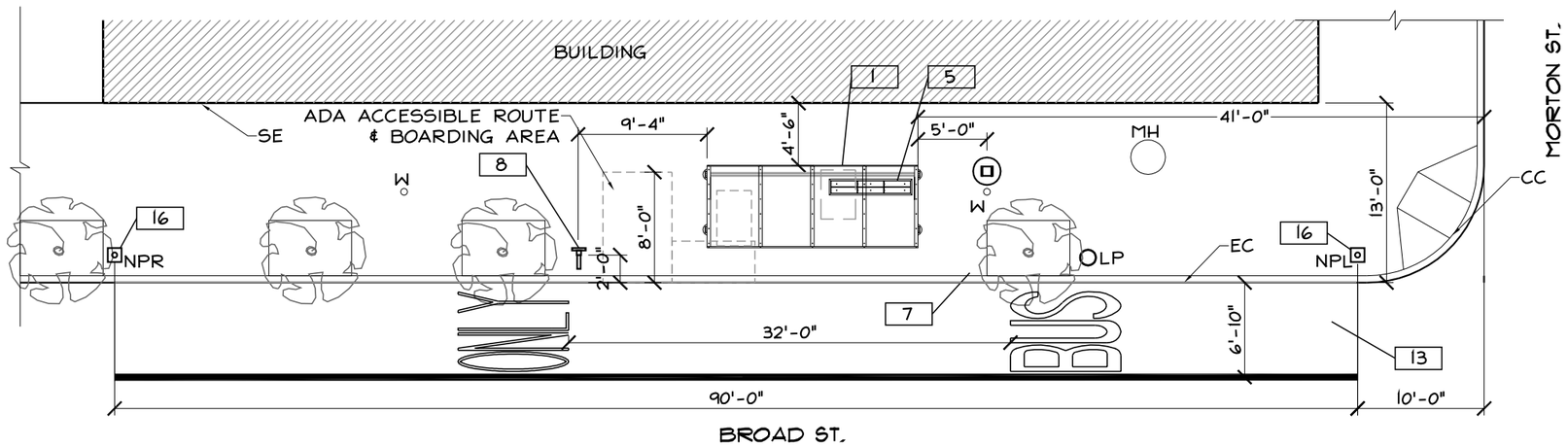

1 / 02 NORTH STOP

Scale: 3/32" = 1'-0"

WORK NOTES

1	INSTALL NEW FOUR POST SHELTER
2	INSTALL NEW LARGE FOUR POST SHELTER
3	INSTALL NEW CANTILEVER SHELTER
4	INSTALL NEW LARGE CANTILEVER SHELTER
5	INSTALL NEW BENCH
6	INSTALL NEW BIKE RACK
7	INSTALL NEW TRASH CAN
8	INSTALL NEW ETS
9	INSTALL NEW FSS
10	INSTALL NEW WFT
11	INSTALL NEW TVM
12	PREP. ℄ INSTALL NEW CONCRETE PAD
13	NEW STRIPING-SEE DETAIL 1/29
14	NOT IN CONTRACT - FUTURE NEW TREE AND CONC SIDEWALK WORK FOR TREE
15	EXISTING SHELTER TO BE REMOVE BY OTHERS
16	NEW NO PARKING SIGN WITH DIRECTIONAL ARROWS

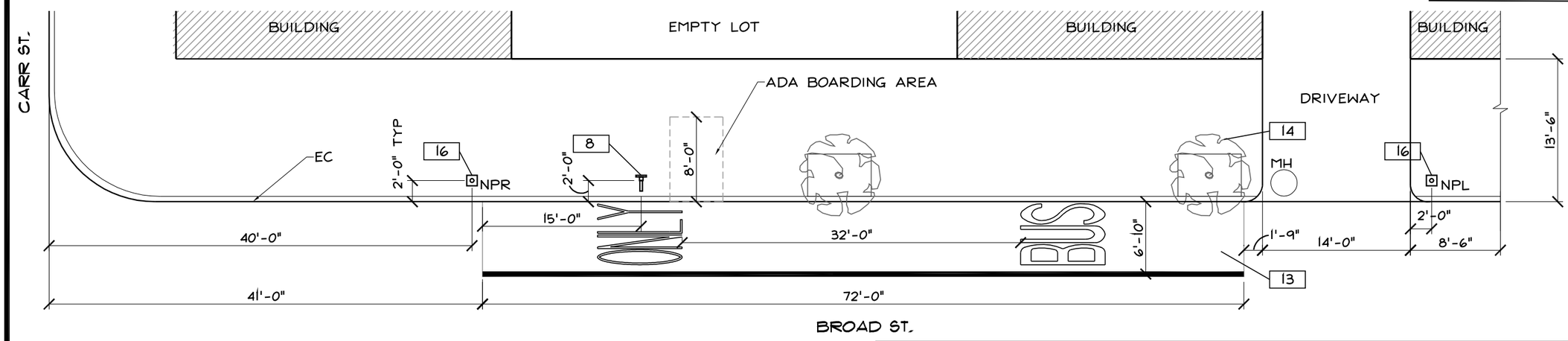

2 / 02 SOUTH STOP

Scale: 3/32" = 1'-0"

50 Holden Street
Providence, Rhode Island 02908

Phone: (401) 272-1730
Fax: (401) 273-7156

E-mail: rgbinfo@rgb.net
www.rgb.net

RGB

Architecture · Engineering · Interior Design

Project
RIPTA R-LINE STATIONS
BROAD - NORTH MAIN

RIPTA
RHODE ISLAND PUBLIC TRANSIT AUTHORITY

PROVIDENCE / PAWTUCKET, RI

Contents
BROAD AT CARR_CALLA

Project No.	6060	Drawing No.	**2**
Checked by	JRR		
Issued	FEB 10, 2014	Sheet 2	of 28

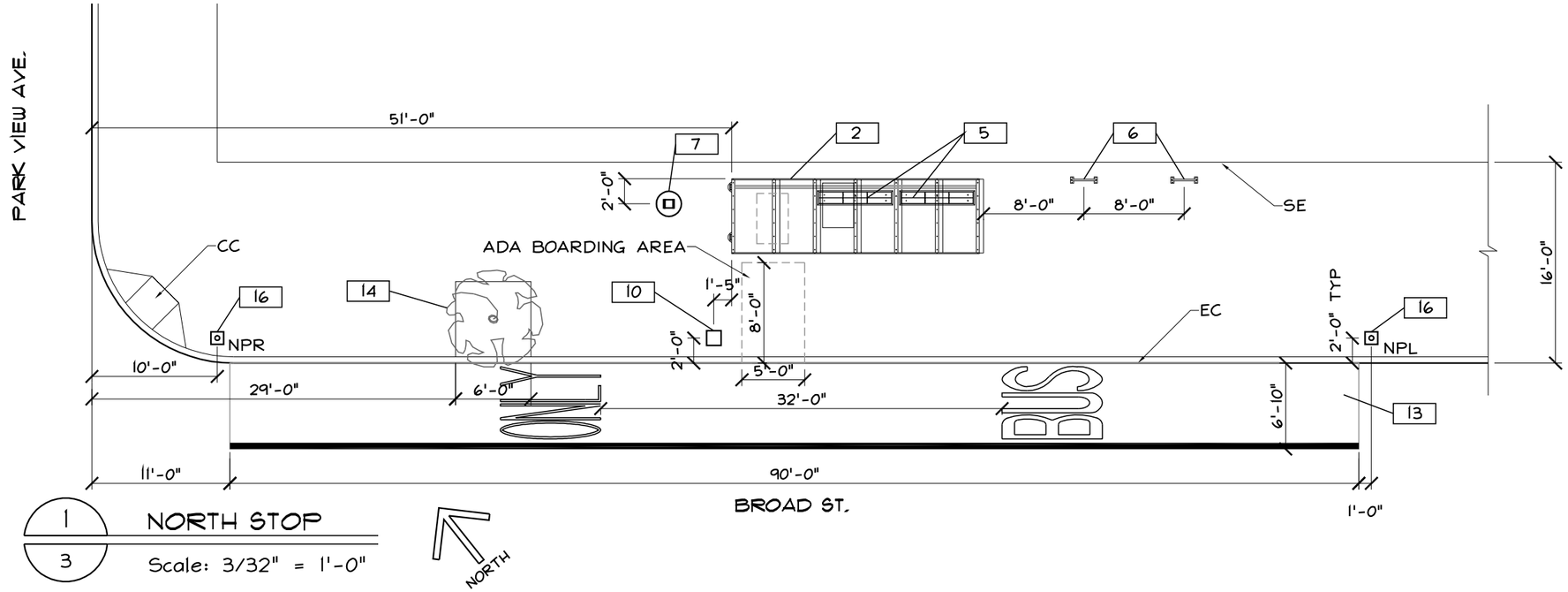

1 / 3 NORTH STOP

Scale: 3/32" = 1'-0"

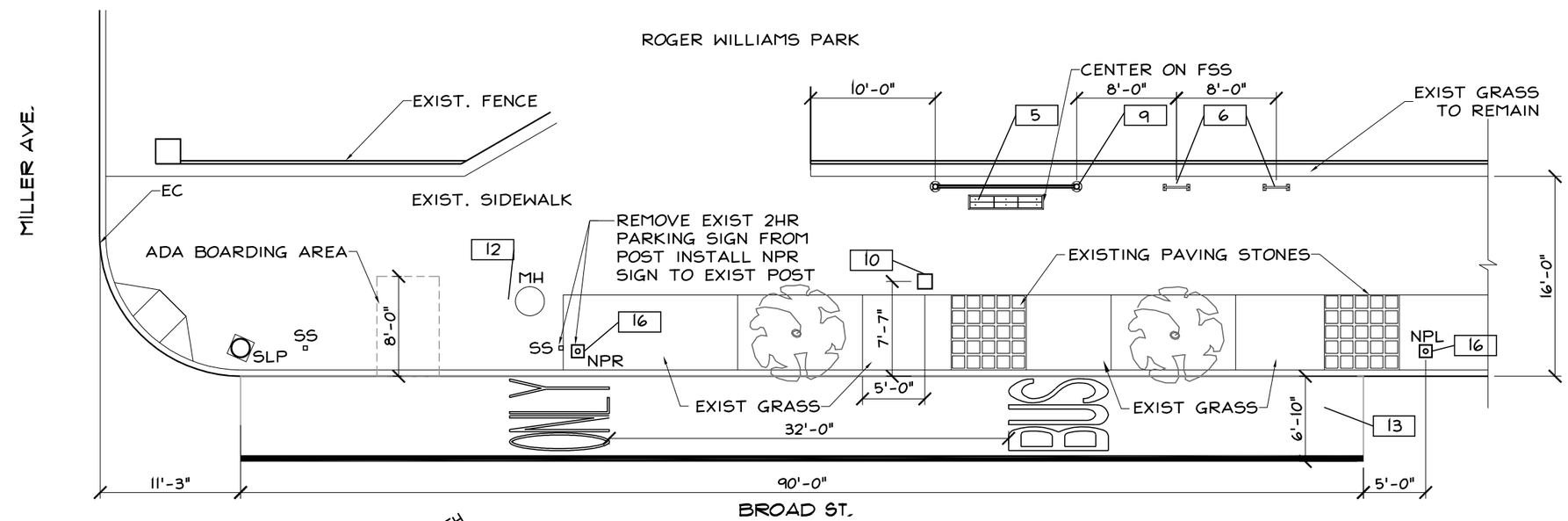

2 / 3 SOUTH STOP

Scale: 3/32" = 1'-0"

WORK NOTES

1	INSTALL NEW FOUR POST SHELTER
2	INSTALL NEW LARGE FOUR POST SHELTER
3	INSTALL NEW CANTILEVER SHELTER
4	INSTALL NEW LARGE CANTILEVER SHELTER
5	INSTALL NEW BENCH
6	INSTALL NEW BIKE RACK
7	INSTALL NEW TRASH CAN
8	INSTALL NEW ETS
9	INSTALL NEW FSS
10	INSTALL NEW WFT
11	INSTALL NEW TVM
12	PREP. & INSTALL NEW CONCRETE PAD
13	NEW STRIPING-SEE DETAIL 1/29
14	NOT IN CONTRACT - FUTURE NEW TREE AND CONC SIDEWALK WORK FOR TREE
15	EXISTING SHELTER TO BE REMOVE BY OTHERS
16	NEW NO PARKING SIGN WITH DIRECTIONAL ARROWS

NOTE: NORTH & SOUTH STOPS INCLUDE ARTWORK
- NORTH STOP IS A SHELTER PANEL
- SOUTH STOP IS A SCREEN PANEL

50 Holden Street
Providence, Rhode Island 02908

Phone: (401) 272-1730
Fax: (401) 273-7156

E-mail: rgbinfo@rgb.net
www.rgb.net

RGB

Architecture · Engineering · Interior Design

Project
RIPTA R - LINE STATIONS
BROAD - NORTH MAIN

RIPTA
RHODE ISLAND PUBLIC TRANSIT AUTHORITY

PROVIDENCE / PAWTUCKET, RI

Contents
ROGER WILLIAMS PARK

Project No.	6060	Drawing No.	3
Checked by	JRR		
Issued	FEB 10, 2014	Sheet 3	of 28

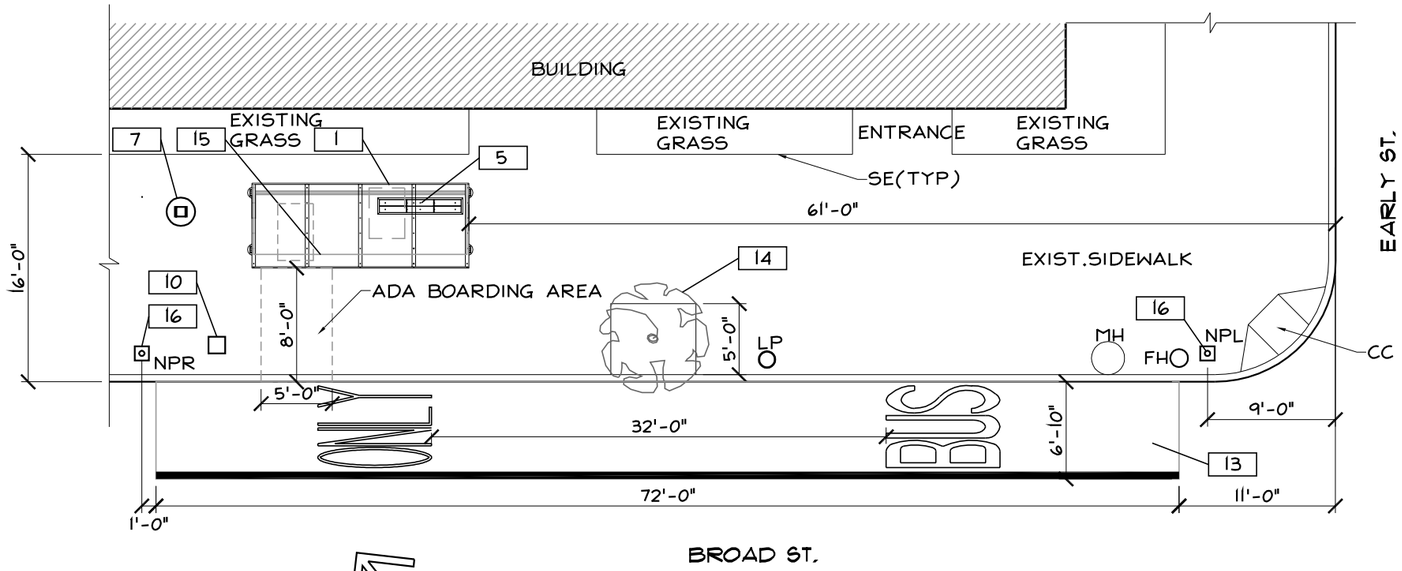

1/4 NORTH STOP

Scale: 3/32" = 1'-0"

NORTH

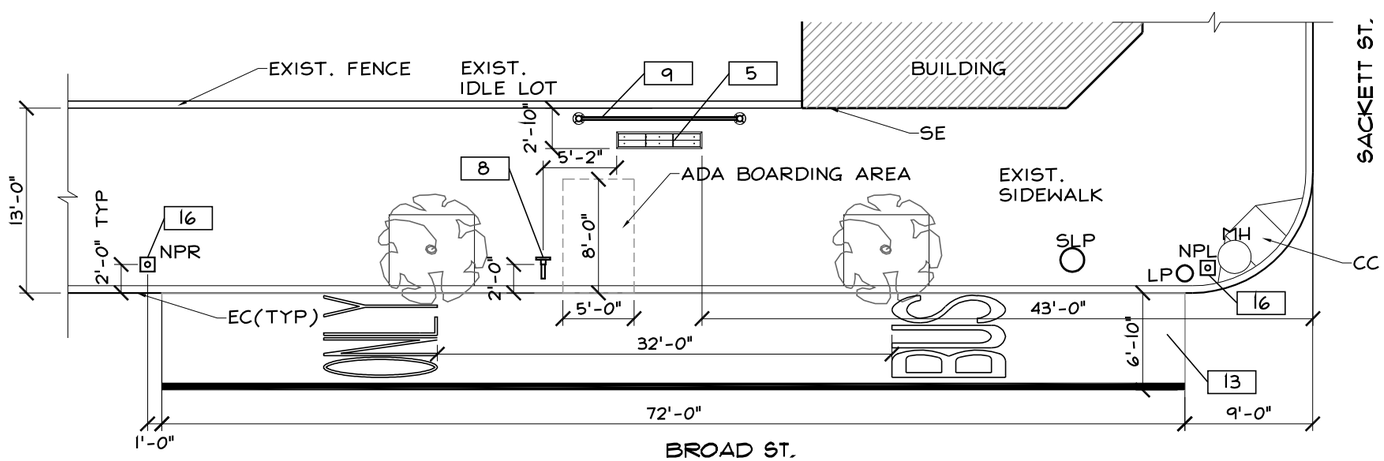

2/4 SOUTH STOP

Scale: 3/32" = 1'-0"

NORTH

WORK NOTES

1	INSTALL NEW FOUR POST SHELTER
2	INSTALL NEW LARGE FOUR POST SHELTER
3	INSTALL NEW CANTILEVER SHELTER
4	INSTALL NEW LARGE CANTILEVER SHELTER
5	INSTALL NEW BENCH
6	INSTALL NEW BIKE RACK
7	INSTALL NEW TRASH CAN
8	INSTALL NEW ETS
9	INSTALL NEW FSS
10	INSTALL NEW WFT
11	INSTALL NEW TVM
12	PREP. & INSTALL NEW CONCRETE PAD
13	NEW STRIPING-SEE DETAIL 1/29
14	NOT IN CONTRACT - FUTURE NEW TREE AND CONC SIDEWALK WORK FOR TREE
15	EXISTING SHELTER TO BE REMOVE BY OTHERS
16	NEW NO PARKING SIGN WITH DIRECTIONAL ARROWS

NOTE: SOUTH STOP INCLUDES ARTWORK (SCREEN PANEL)

50 Holden Street
Providence, Rhode Island 02908

Phone: (401) 272-1730
Fax: (401) 273-7156

E-mail: rgbinfo@rgb.net
www.rgb.net

RGB

Architecture · Engineering · Interior Design

Project
RIPTA R - LINE STATIONS
BROAD - NORTH MAIN

RIPTA
RHODE ISLAND PUBLIC TRANSIT AUTHORITY

PROVIDENCE / PAWTUCKET, RI

Contents **BROAD AT EARLY**

Project No.	6060	Drawing No.	4
Checked by	JRR		
Issued	FEB 10, 2014	Sheet 4	of 28

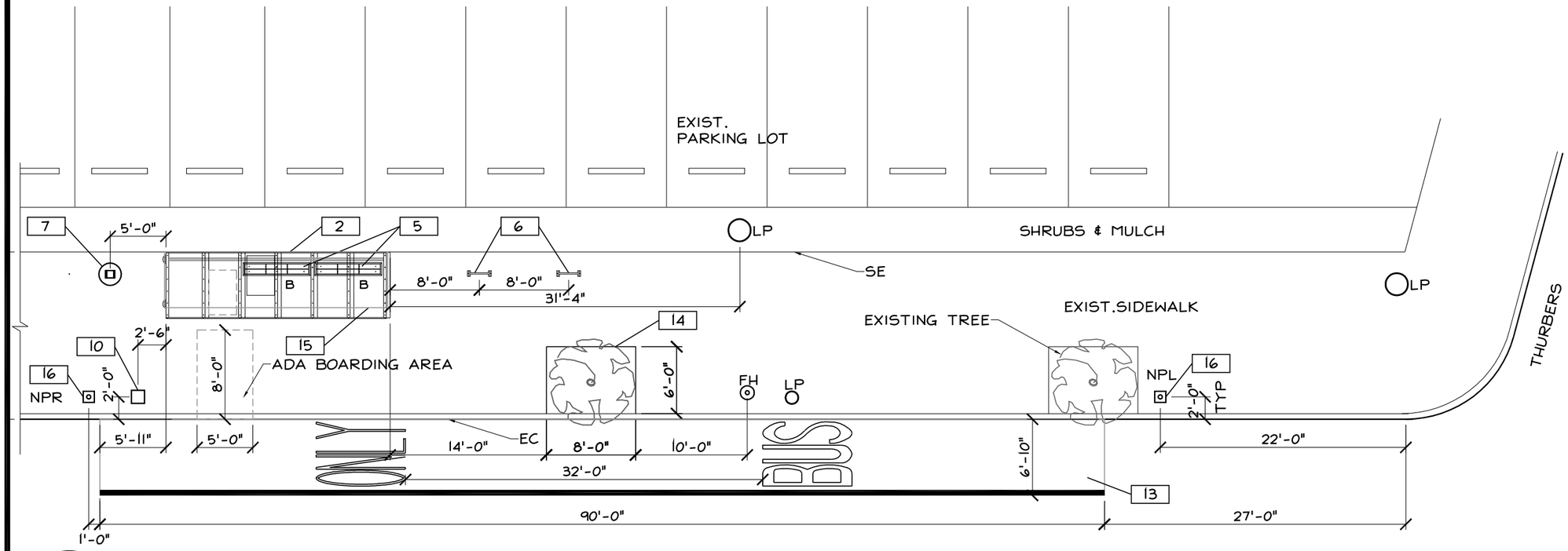

1/5 NORTH STOP

Scale: 3/32" = 1'-0"

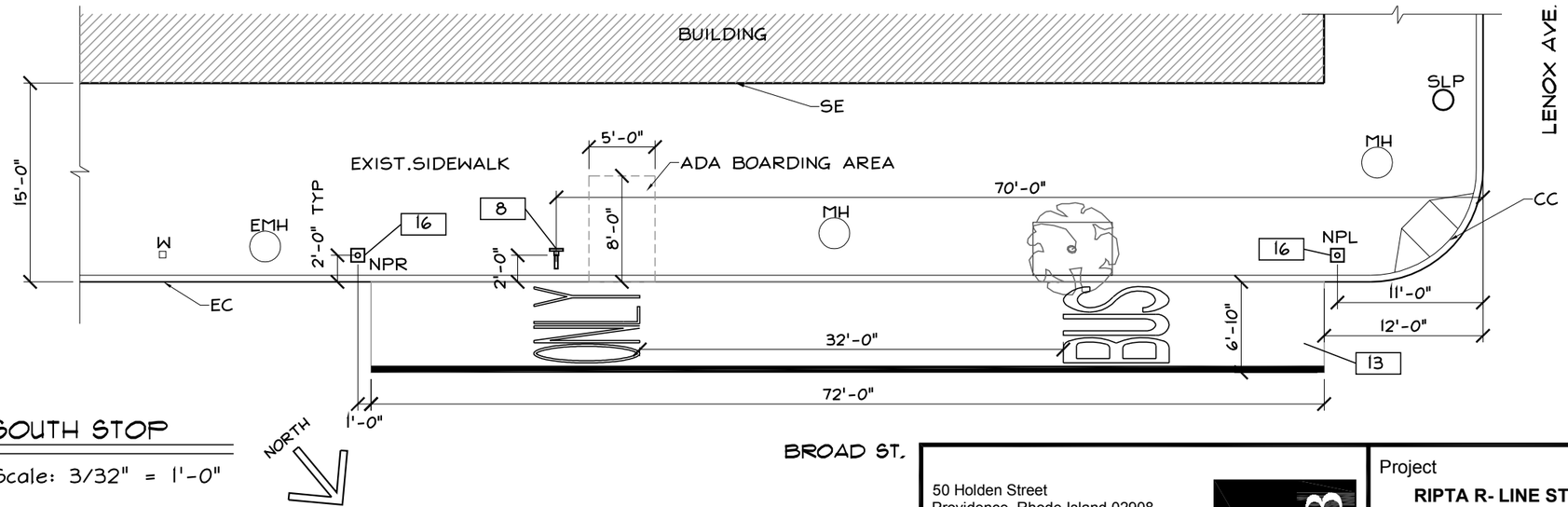

2/5 SOUTH STOP

Scale: 3/32" = 1'-0"

WORK NOTES

1. INSTALL NEW FOUR POST SHELTER
2. INSTALL NEW LARGE FOUR POST SHELTER
3. INSTALL NEW CANTILEVER SHELTER
4. INSTALL NEW LARGE CANTILEVER SHELTER
5. INSTALL NEW BENCH
6. INSTALL NEW BIKE RACK
7. INSTALL NEW TRASH CAN
8. INSTALL NEW ETS
9. INSTALL NEW FSS
10. INSTALL NEW WFT
11. INSTALL NEW TVM
12. PREP. & INSTALL NEW CONCRETE PAD
13. NEW STRIPING-SEE DETAIL 1/29
14. NOT IN CONTRACT - FUTURE NEW TREE AND CONC SIDEWALK WORK FOR TREE
15. EXISTING SHELTER TO BE REMOVE BY OTHERS
16. NEW NO PARKING SIGN WITH DIRECTIONAL ARROWS

NOTE: NORTH STOP INCLUDES ARTWORK (SHELTER PANEL)

50 Holden Street
Providence, Rhode Island 02908

Phone: (401) 272-1730
Fax: (401) 273-7156

E-mail: rgbinfo@rgb.net
www.rgb.net

RGB

Architecture · Engineering · Interior Design

Project

RIPTA R- LINE STATIONS
BROAD - NORTH MAIN

RIPTA
RHODE ISLAND PUBLIC TRANSIT AUTHORITY

PROVIDENCE / PAWTUCKET, RI

Contents **BROAD AT THURBERS**

Project No.	6060	Drawing No.	5
Checked by	JRR		
Issued	FEB 10, 2014	Sheet 5	of 28

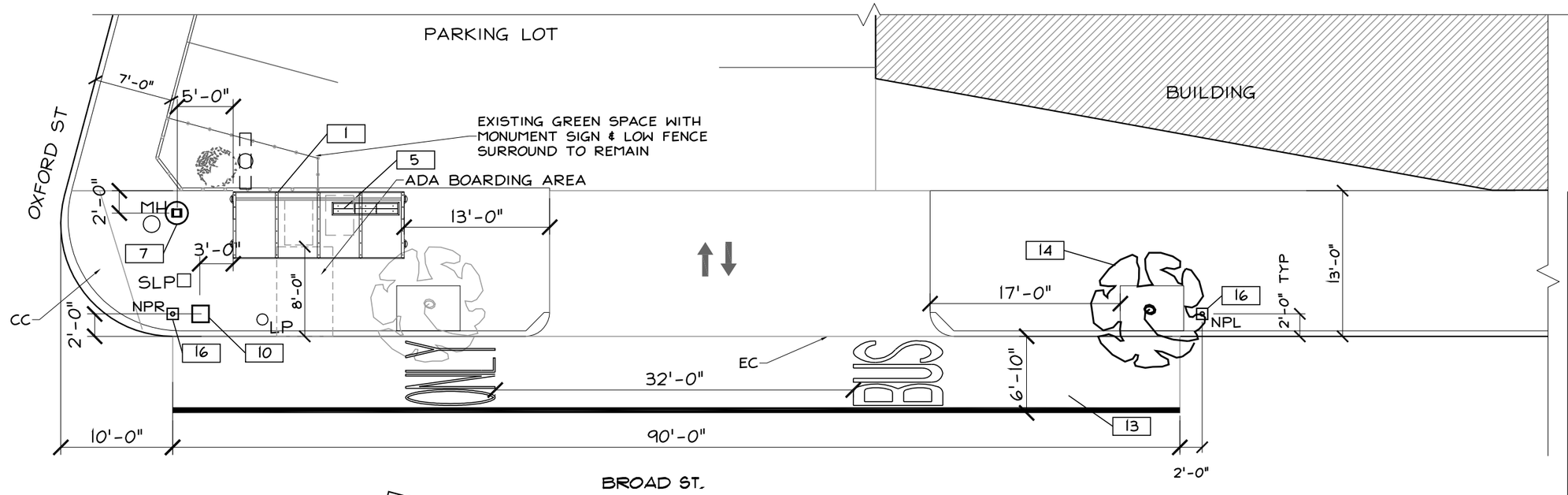

1/6 NORTH STOP

Scale: 3/32" = 1'-0"

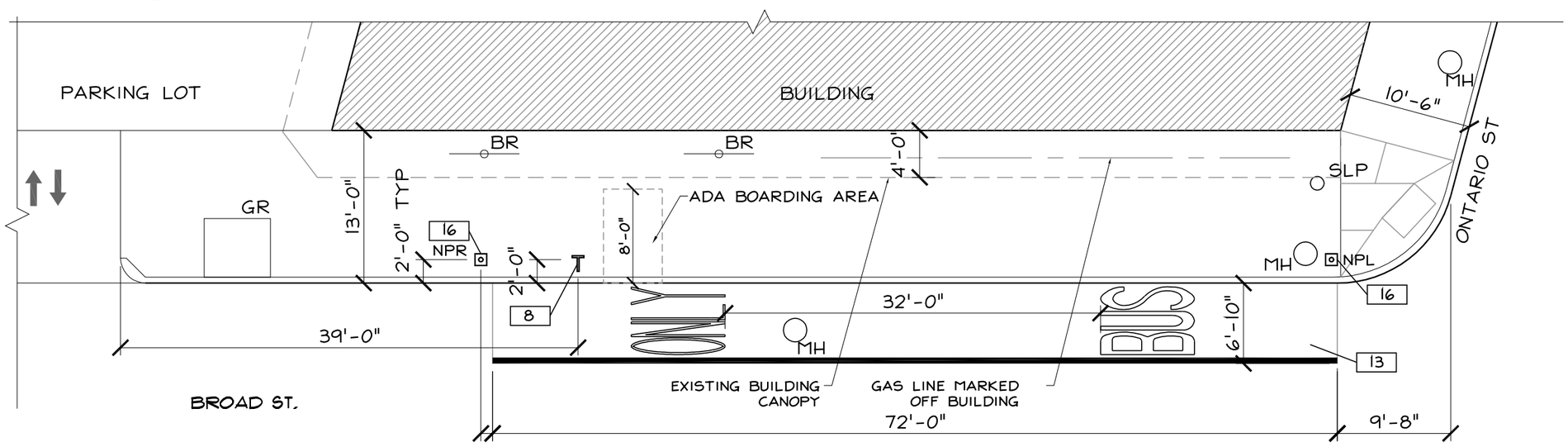

2/6 SOUTH STOP

Scale: 3/32" = 1'-0"

WORK NOTES

1	INSTALL NEW FOUR POST SHELTER
2	INSTALL NEW LARGE FOUR POST SHELTER
3	INSTALL NEW CANTILEVER SHELTER
4	INSTALL NEW LARGE CANTILEVER SHELTER
5	INSTALL NEW BENCH
6	INSTALL NEW BIKE RACK
7	INSTALL NEW TRASH CAN
8	INSTALL NEW ETS
9	INSTALL NEW FSS
10	INSTALL NEW WFT
11	INSTALL NEW TVM
12	PREP. & INSTALL NEW CONCRETE PAD
13	NEW STRIPING-SEE DETAIL 1/29
14	NOT IN CONTRACT - FUTURE NEW TREE AND CONC SIDEWALK WORK FOR TREE
15	EXISTING SHELTER TO BE REMOVE BY OTHERS
16	NEW NO PARKING SIGN WITH DIRECTIONAL ARROWS

50 Holden Street
Providence, Rhode Island 02908

Phone: (401) 272-1730
Fax: (401) 273-7156

E-mail: rgbinfo@rgb.net
www.rgb.net

RGB

Architecture · Engineering · Interior Design

Project
RIPTA R - LINE STATIONS
BROAD - NORTH MAIN

RIPTA
RHODE ISLAND PUBLIC TRANSIT AUTHORITY

PROVIDENCE / PAWTUCKET, RI

Contents **BROAD AT ONTARIO**

Project No.	6060	Drawing No.	6
Checked by	JRR		
Issued	FEB 10, 2014	Sheet 6	of 28

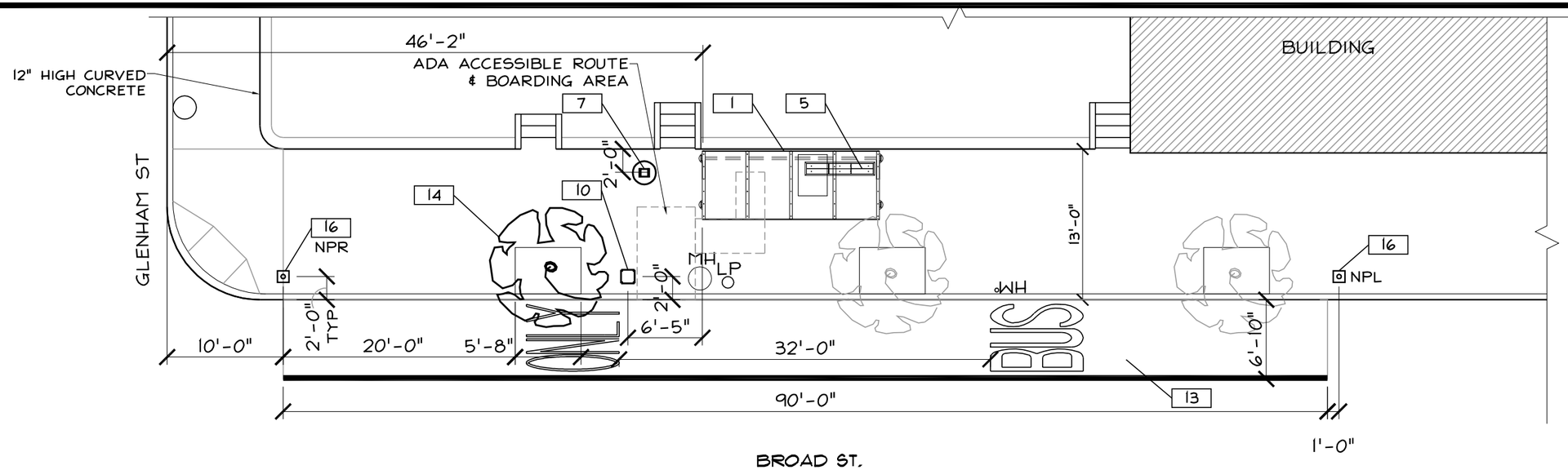

1 / 7 NORTH STOP

Scale: 3/32" = 1'-0"

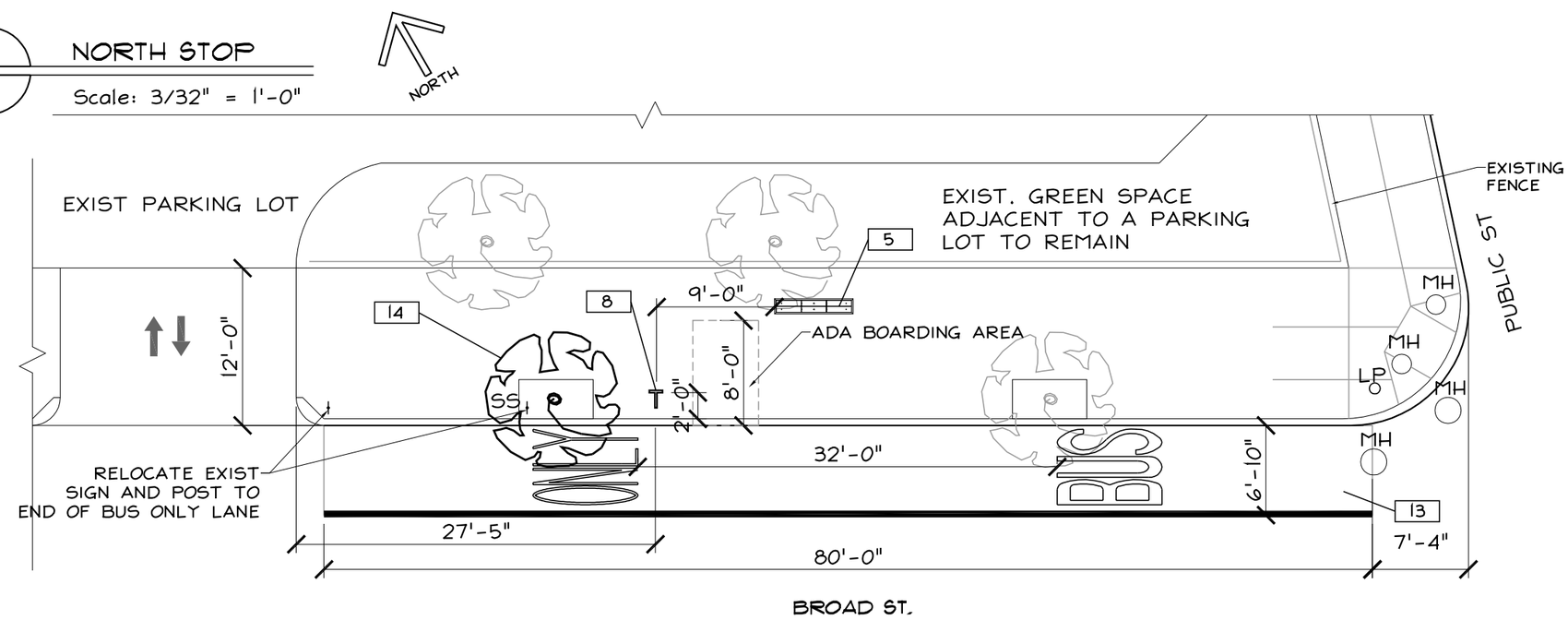

2 / 7 SOUTH STOP

Scale: 3/32" = 1'-0"

WORK NOTES

1	INSTALL NEW FOUR POST SHELTER
2	INSTALL NEW LARGE FOUR POST SHELTER
3	INSTALL NEW CANTILEVER SHELTER
4	INSTALL NEW LARGE CANTILEVER SHELTER
5	INSTALL NEW BENCH
6	INSTALL NEW BIKE RACK
7	INSTALL NEW TRASH CAN
8	INSTALL NEW ETS
9	INSTALL NEW FSS
10	INSTALL NEW WFT
11	INSTALL NEW TVM
12	PREP. & INSTALL NEW CONCRETE PAD
13	NEW STRIPING-SEE DETAIL 1/29
14	NOT IN CONTRACT - FUTURE NEW TREE AND CONC SIDEWALK WORK FOR TREE
15	EXISTING SHELTER TO BE REMOVE BY OTHERS
16	NEW NO PARKING SIGN WITH DIRECTIONAL ARROWS

NOTE: NORTH & SOUTH STOPS INCLUDE ARTWORK - NORTH STOP IS A SHELTER PANEL
- SEATING @ BOTH STOPS

50 Holden Street
Providence, Rhode Island 02908

Phone: (401) 272-1730
Fax: (401) 273-7156

E-mail: rgbinfo@rgb.net
www.rgb.net

RGB
Architecture · Engineering · Interior Design

Project
RIPTA R - LINE STATIONS
BROAD - NORTH MAIN

RIPTA
RHODE ISLAND PUBLIC TRANSIT AUTHORITY

PROVIDENCE / PAWTUCKET, RI

Contents **BROAD AT PUBLIC**

Project No.	6060	Drawing No.	7
Checked by	JRR		
Issued	FEB 10, 2014	Sheet 7	of 28

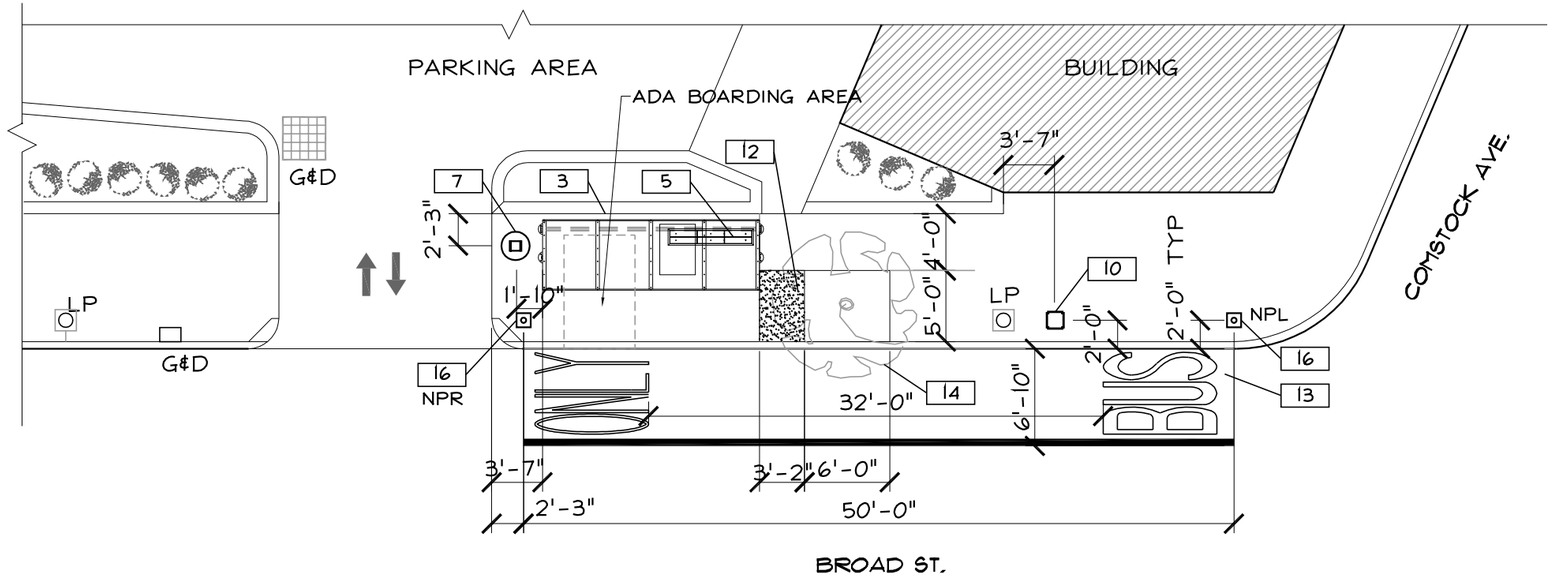

1/8 NORTH STOP

Scale: 3/32" = 1'-0"

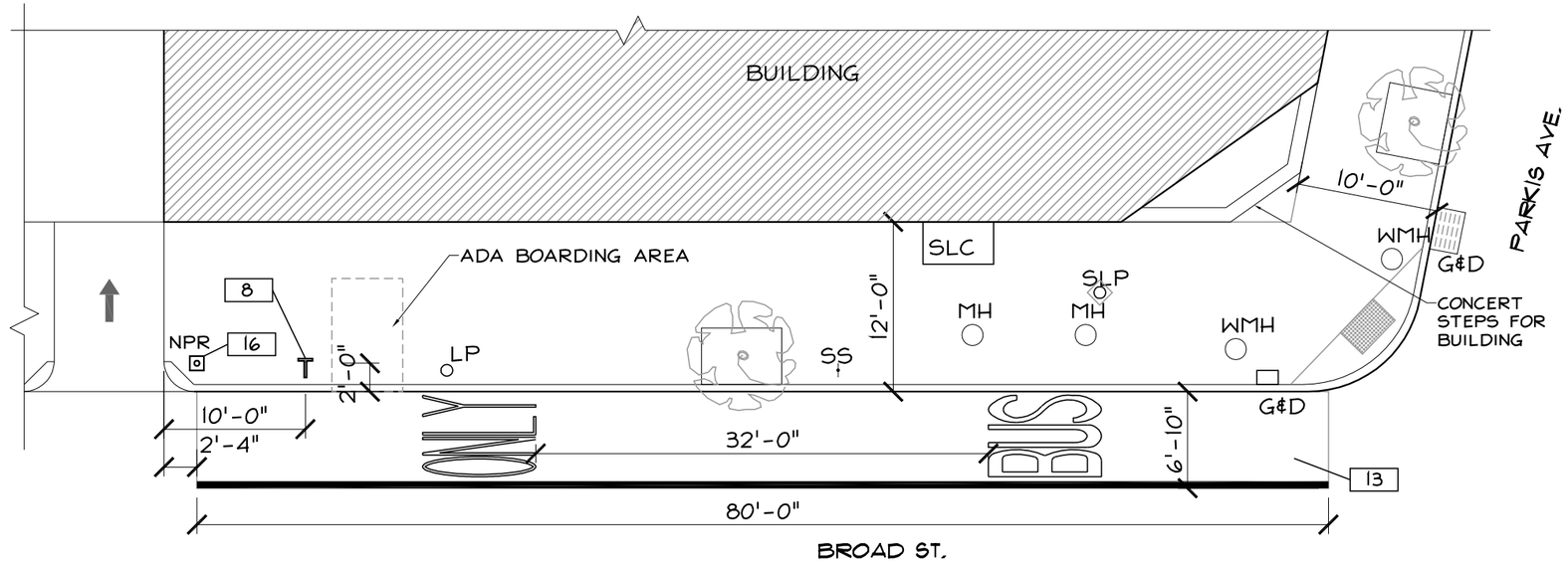

2/8 SOUTH STOP

Scale: 3/32" = 1'-0"

WORK NOTES

1	INSTALL NEW FOUR POST SHELTER
2	INSTALL NEW LARGE FOUR POST SHELTER
3	INSTALL NEW CANTILEVER SHELTER
4	INSTALL NEW LARGE CANTILEVER SHELTER
5	INSTALL NEW BENCH
6	INSTALL NEW BIKE RACK
7	INSTALL NEW TRASH CAN
8	INSTALL NEW ETS
9	INSTALL NEW FSS
10	INSTALL NEW WFT
11	INSTALL NEW TVM
12	PREP. ¢ INSTALL NEW CONCRETE PAD
13	NEW STRIPING-SEE DETAIL 1/29
14	NOT IN CONTRACT - FUTURE NEW TREE AND CONC SIDEWALK WORK FOR TREE
15	EXISTING SHELTER TO BE REMOVE BY OTHERS
16	NEW NO PARKING SIGN WITH DIRECTIONAL ARROWS

50 Holden Street
Providence, Rhode Island 02908

Phone: (401) 272-1730
Fax: (401) 273-7156

E-mail: rgbinfo@rgb.net
www.rgb.net

RGB

Architecture · Engineering · Interior Design

Project
RIPTA R - LINE STATIONS
BROAD - NORTH MAIN

RIPTA
RHODE ISLAND PUBLIC TRANSIT AUTHORITY

PROVIDENCE / PAWTUCKET, RI

Contents **BROAD AT PARKIS**

Project No. 6060	Drawing No. **8**
Checked by JRR	
Issued FEB 10, 2014	Sheet 8 of 28

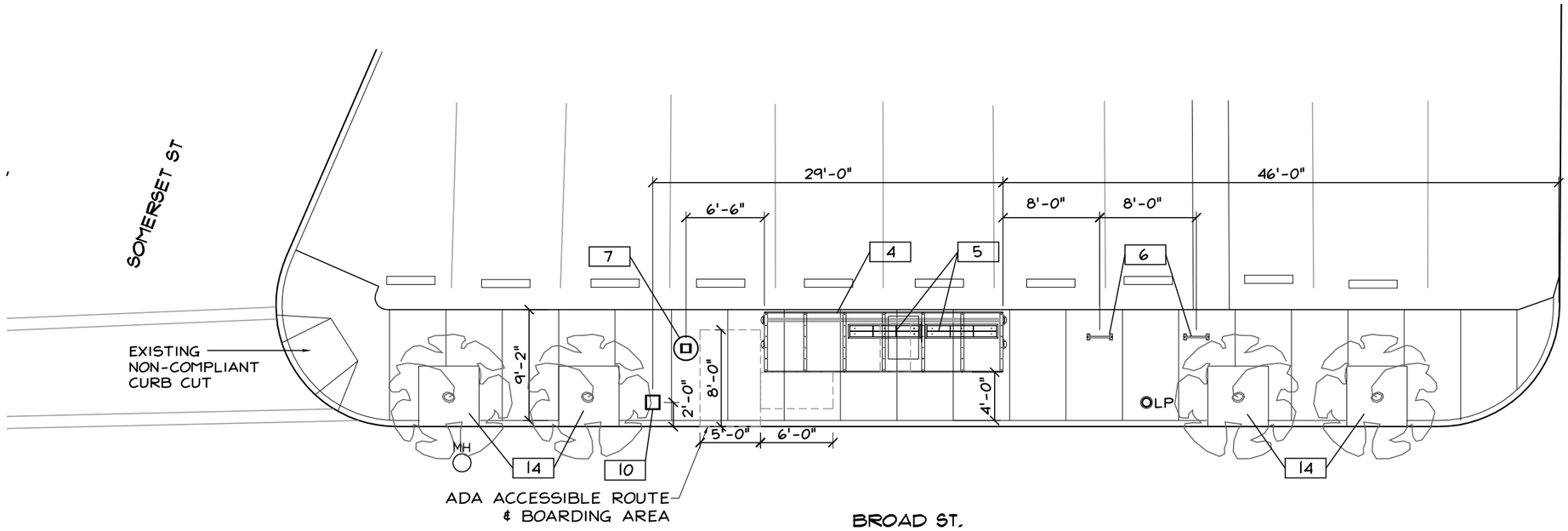

1/9 NORTH STOP

Scale: 3/32" = 1'-0"

NORTH

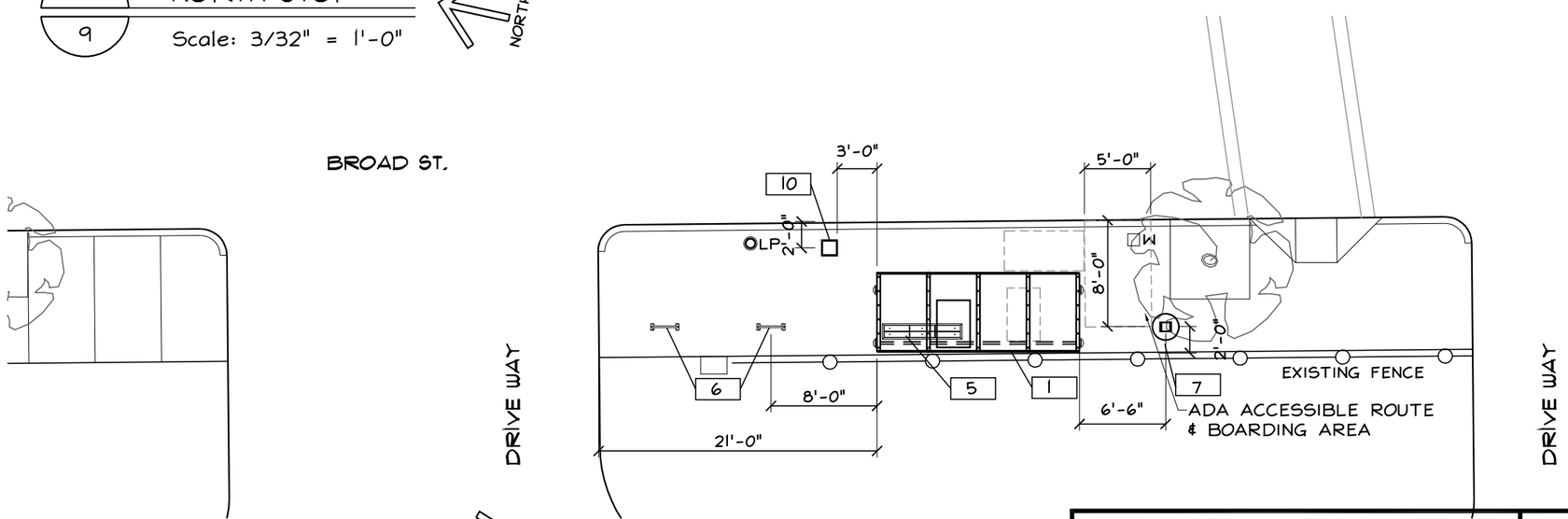

2/9 SOUTH STOP

Scale: 3/32" = 1'-0"

NORTH

WORK NOTES

1	INSTALL NEW FOUR POST SHELTER
2	INSTALL NEW LARGE FOUR POST SHELTER
3	INSTALL NEW CANTILEVER SHELTER
4	INSTALL NEW LARGE CANTILEVER SHELTER
5	INSTALL NEW BENCH
6	INSTALL NEW BIKE RACK
7	INSTALL NEW TRASH CAN
8	INSTALL NEW ETS
9	INSTALL NEW FSS
10	INSTALL NEW WFT
11	INSTALL NEW TVM
12	PREP. & INSTALL NEW CONCRETE PAD
13	NEW STRIPING-SEE DETAIL 1/29
14	NOT IN CONTRACT - FUTURE NEW TREE AND CONC SIDEWALK WORK FOR TREE
15	EXISTING SHELTER TO BE REMOVE BY OTHERS
16	NEW NO PARKING SIGN WITH DIRECTIONAL ARROWS

NOTE: NORTH & SOUTH STOPS INCLUDE ARTWORK
- SHELTER PANELS
- AND SEATING

50 Holden Street
Providence, Rhode Island 02908

Phone: (401) 272-1730
Fax: (401) 273-7156

E-mail: rgbinfo@rgb.net
www.rgb.net

RGB
Architecture · Engineering · Interior Design

Project
RIPTA R - LINE STATIONS
BROAD - NORTH MAIN

RIPTA
RHODE ISLAND PUBLIC TRANSIT AUTHORITY

PROVIDENCE / PAWTUCKET, RI

Contents
TRINITY SQUARE

Project No.	6060	Drawing No.	9
Checked by	JRR		
Issued	FEB 10, 2014	Sheet 9	of 28

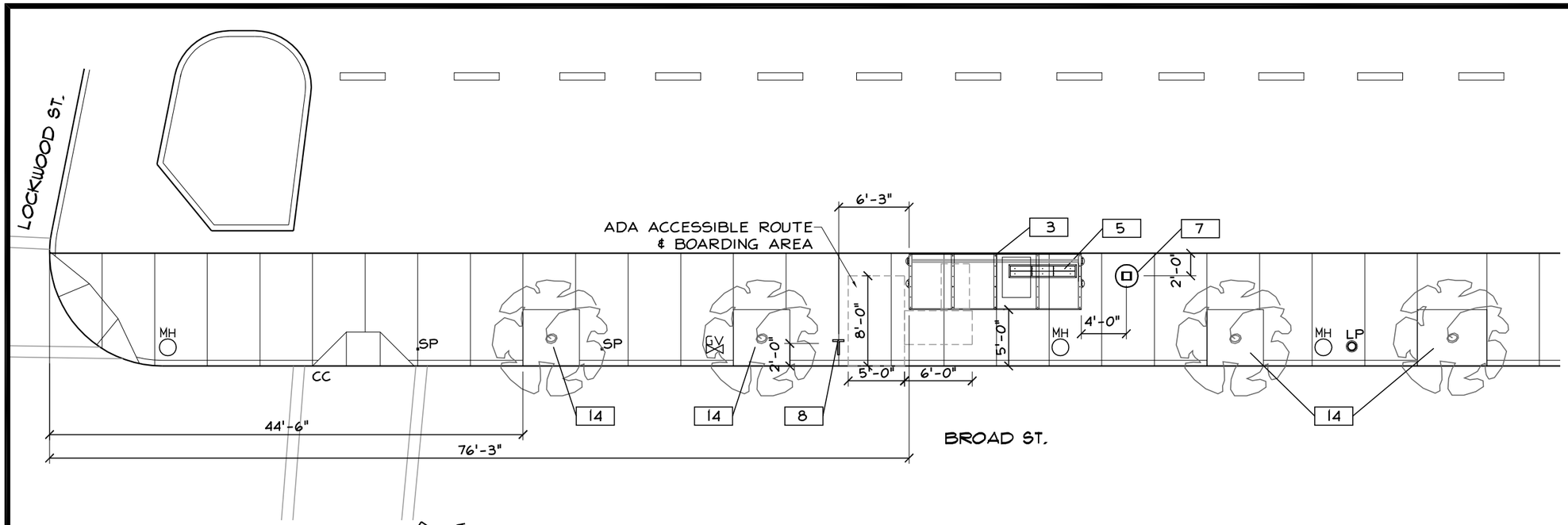

1 / 10 NORTH STOP

Scale: 3/32" = 1'-0"

NORTH

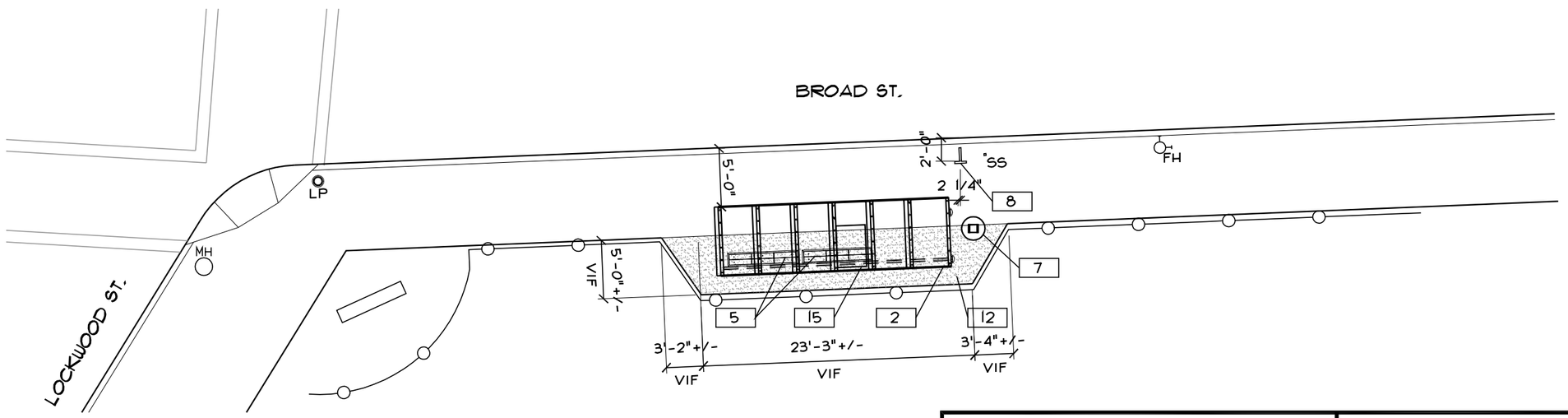

2 / 10 SOUTH STOP

Scale: 3/32" = 1'-0"

NORTH

WORK NOTES

1	INSTALL NEW FOUR POST SHELTER
2	INSTALL NEW LARGE FOUR POST SHELTER
3	INSTALL NEW CANTILEVER SHELTER
4	INSTALL NEW LARGE CANTILEVER SHELTER
5	INSTALL NEW BENCH
6	INSTALL NEW BIKE RACK
7	INSTALL NEW TRASH CAN
8	INSTALL NEW ETS
9	INSTALL NEW FSS
10	INSTALL NEW WFT
11	INSTALL NEW TVM
12	PREP. & INSTALL NEW CONCRETE PAD
13	NEW STRIPING-SEE DETAIL 1/29
14	NOT IN CONTRACT - FUTURE NEW TREE AND CONC SIDEWALK WORK FOR TREE
15	EXISTING SHELTER TO BE REMOVE BY OTHERS
16	NEW NO PARKING SIGN WITH DIRECTIONAL ARROWS

50 Holden Street
Providence, Rhode Island 02908

Phone: (401) 272-1730
Fax: (401) 273-7156

E-mail: rgbinfo@rgb.net
www.rgb.net

RGB

Architecture · Engineering · Interior Design

Project
RIPTA R - LINE STATIONS
BROAD - NORTH MAIN

RIPTA
RHODE ISLAND PUBLIC TRANSIT AUTHORITY

PROVIDENCE / PAWTUCKET, RI

Contents
BROAD AT LOCKWOOD

Project No.	6060	Drawing No.	**10**
Checked by	JRR		
Issued	FEB 10, 2014	Sheet 10 of 28	

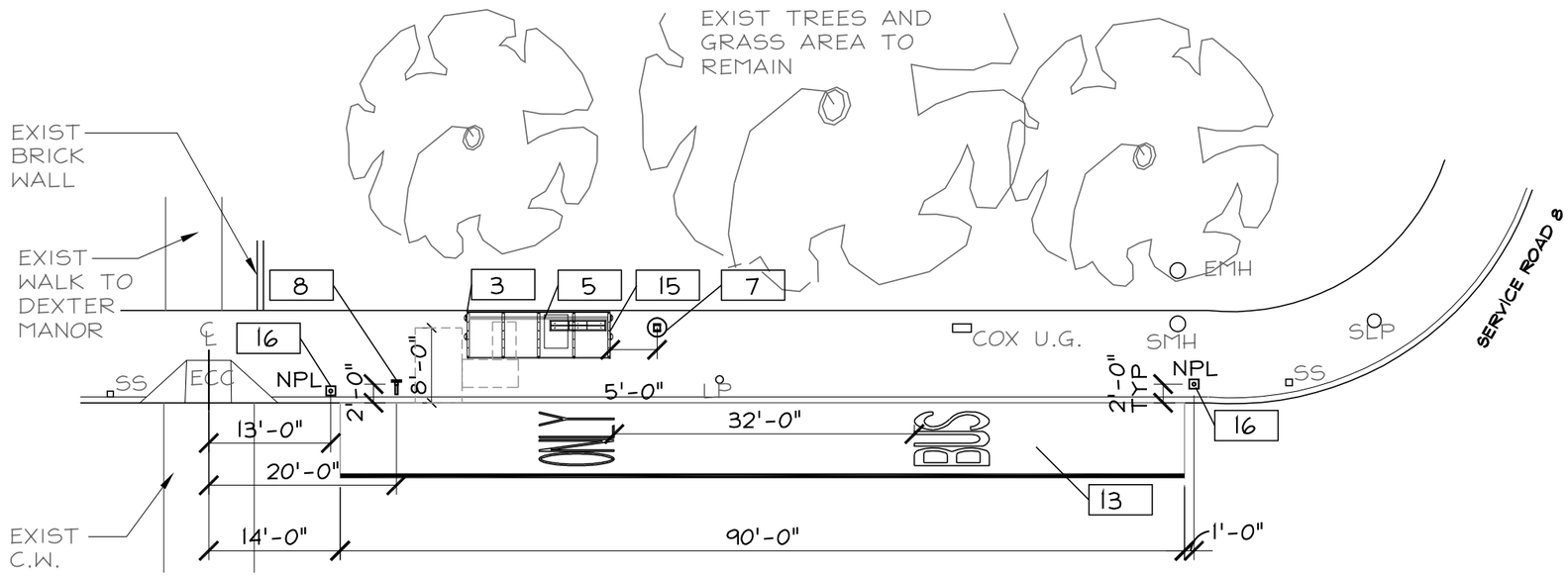

1 / 11 NORTH STOP

Scale: 1/16" = 1'-0"

N

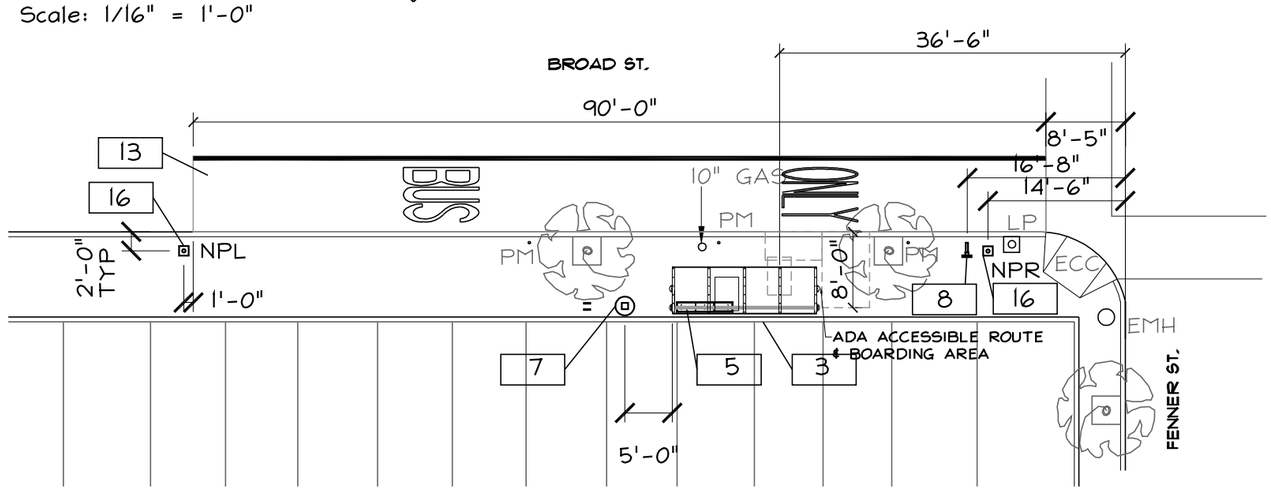

2 / 11 SOUTH STOP

Scale: 1/16" = 1'-0"

N

WORK NOTES

1	INSTALL NEW FOUR POST SHELTER
2	INSTALL NEW LARGE FOUR POST SHELTER
3	INSTALL NEW CANTILEVER SHELTER
4	INSTALL NEW LARGE CANTILEVER SHELTER
5	INSTALL NEW BENCH
6	INSTALL NEW BIKE RACK
7	INSTALL NEW TRASH CAN
8	INSTALL NEW ETS
9	INSTALL NEW FSS
10	INSTALL NEW WFT
11	INSTALL NEW TVM
12	PREP. & INSTALL NEW CONCRETE PAD
13	NEW STRIPING-SEE DETAIL 1/29
14	NOT IN CONTRACT - FUTURE NEW TREE AND CONC SIDEWALK WORK FOR TREE
15	EXISTING SHELTER TO BE REMOVE BY OTHERS
16	NEW NO PARKING SIGN WITH DIRECTIONAL ARROWS

50 Holden Street
Providence, Rhode Island 02908

Phone: (401) 272-1730
Fax: (401) 273-7156

E-mail: rgbinfo@rgb.net
www.rgb.net

RGB
Architecture · Engineering · Interior Design

Project
RIPTA R - LINE STATIONS
BROAD - NORTH MAIN

RIPTA
RHODE ISLAND PUBLIC TRANSIT AUTHORITY

PROVIDENCE / PAWTUCKET, RI

Contents **DEXTER MANOR**

Project No.	6060	Drawing No.	11
Checked by	JRR		
Issued	FEB 10, 2014	Sheet	11 of 28

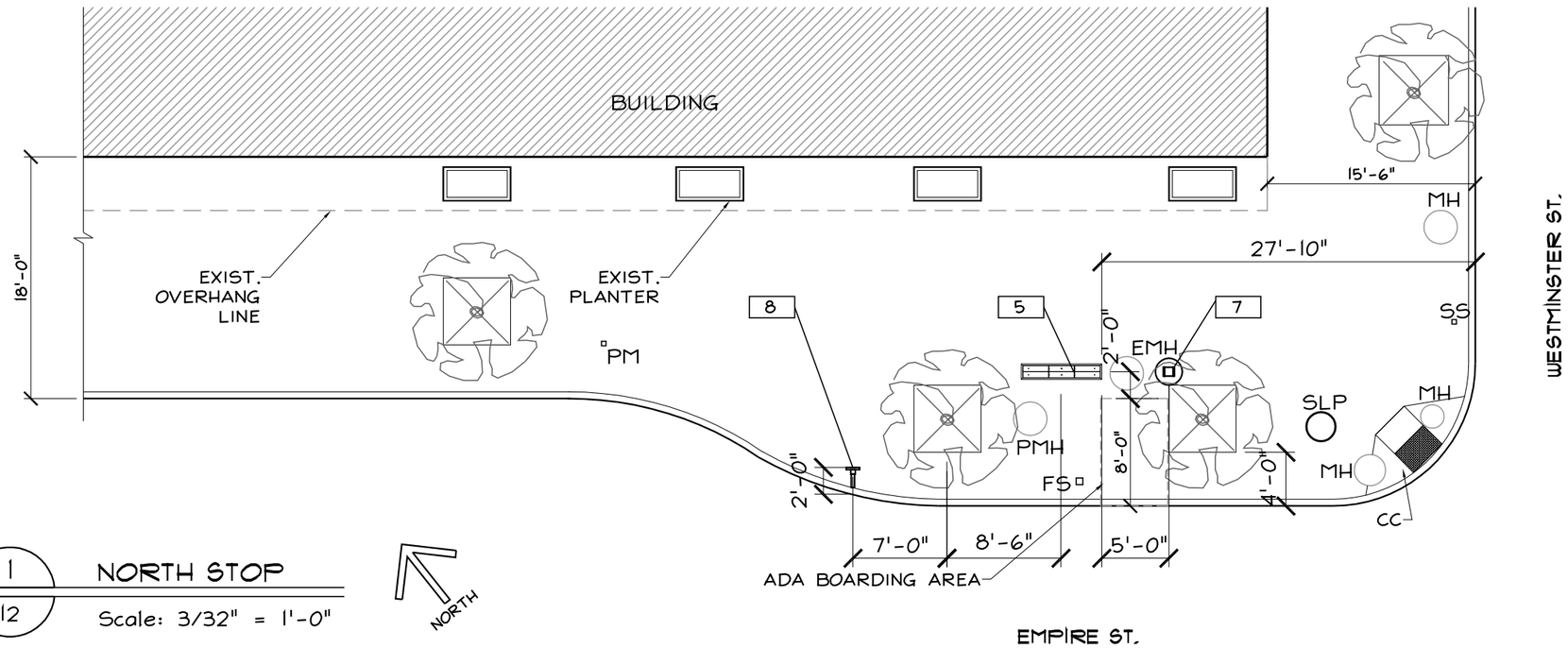

1 / 12 NORTH STOP

Scale: 3/32" = 1'-0"

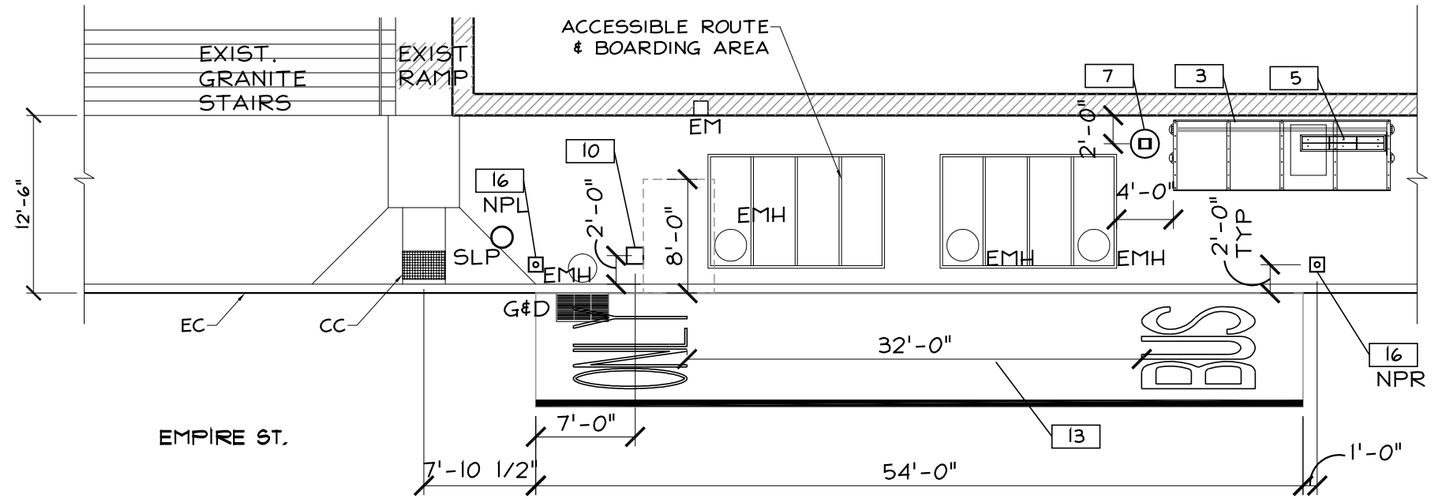

2 / 12 SOUTH STOP

Scale: 3/32" = 1'-0"

WORK NOTES

1	INSTALL NEW FOUR POST SHELTER
2	INSTALL NEW LARGE FOUR POST SHELTER
3	INSTALL NEW CANTILEVER SHELTER
4	INSTALL NEW LARGE CANTILEVER SHELTER
5	INSTALL NEW BENCH
6	INSTALL NEW BIKE RACK
7	INSTALL NEW TRASH CAN
8	INSTALL NEW ETS
9	INSTALL NEW FSS
10	INSTALL NEW WFT
11	INSTALL NEW TVM
12	PREP. & INSTALL NEW CONCRETE PAD
13	NEW STRIPING-SEE DETAIL 1/29
14	NOT IN CONTRACT - FUTURE NEW TREE AND CONC SIDEWALK WORK FOR TREE
15	EXISTING SHELTER TO BE REMOVE BY OTHERS
16	NEW NO PARKING SIGN WITH DIRECTIONAL ARROWS

50 Holden Street
Providence, Rhode Island 02908

Phone: (401) 272-1730
Fax: (401) 273-7156

E-mail: rgbinfo@rgb.net
www.rgb.net

RGB

Architecture · Engineering · Interior Design

Project
RIPTA R - LINE STATIONS
BROAD - NORTH MAIN

RIPTA
RHODE ISLAND PUBLIC TRANSIT AUTHORITY

PROVIDENCE / PAWTUCKET, RI

Contents
EMPIRE AT WESTMINSTER

Project No.	6060	Drawing No.	12
Checked by	JRR		
Issued	FEB 10, 2014	Sheet 12 of 28	

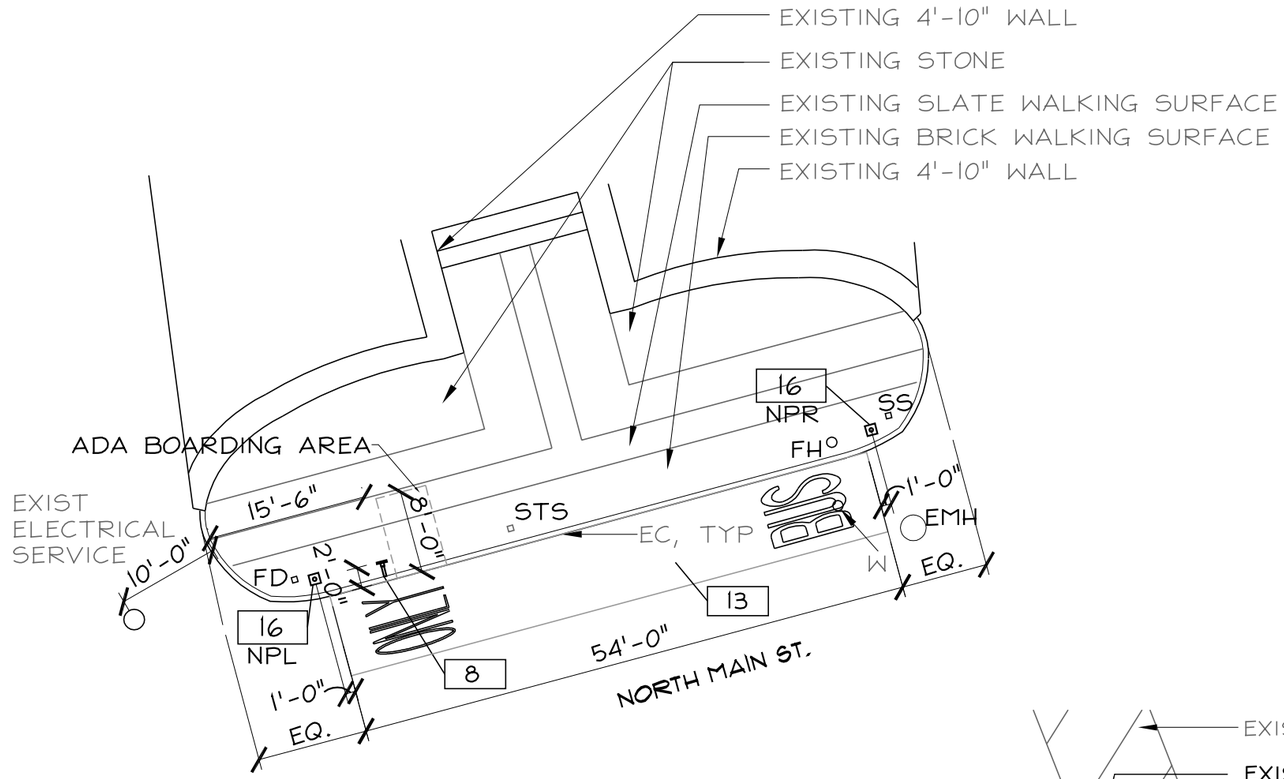

1 / 15 NORTH STOP

Scale: 1/16" = 1'-0"

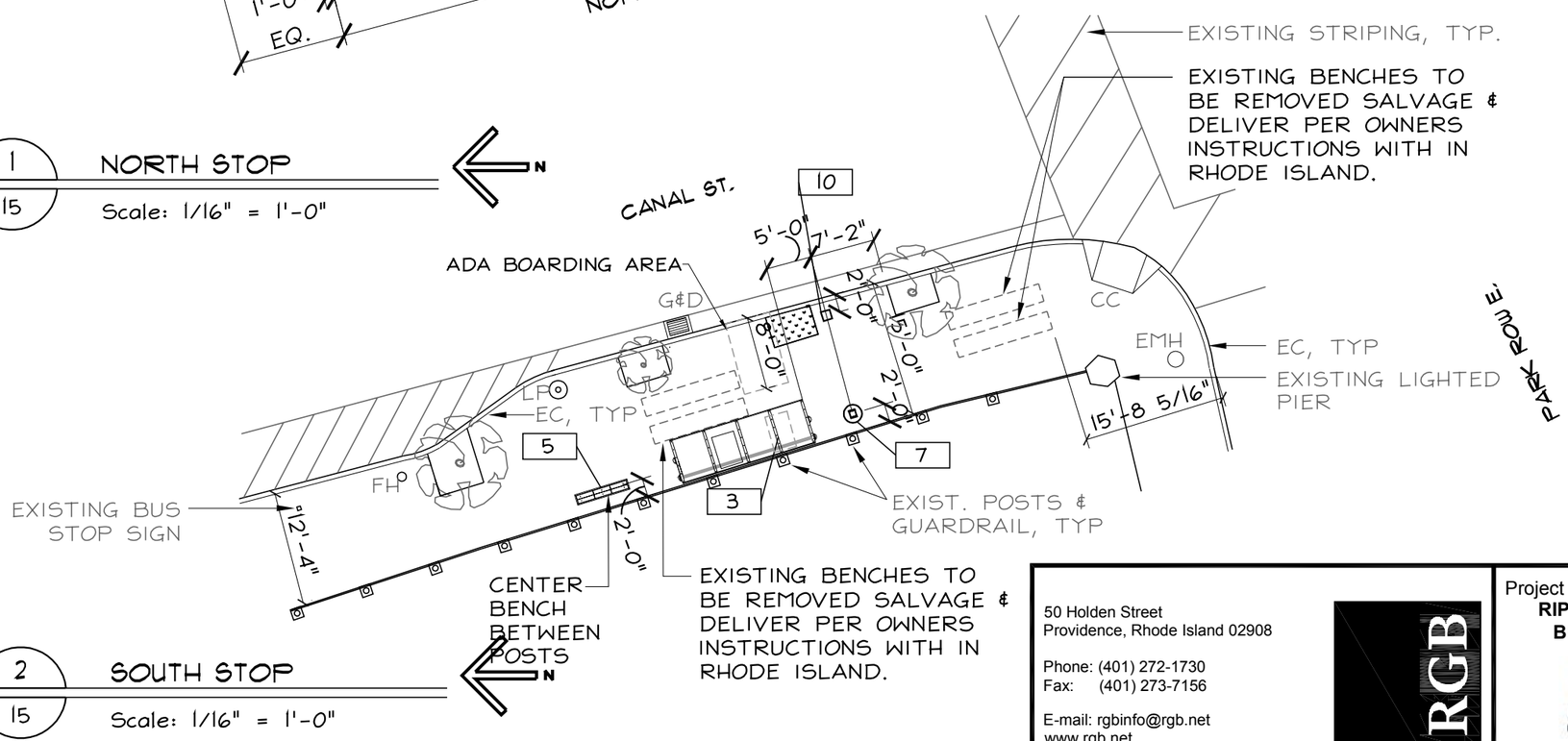

2 / 15 SOUTH STOP

Scale: 1/16" = 1'-0"

WORK NOTES

1	INSTALL NEW FOUR POST SHELTER
2	INSTALL NEW LARGE FOUR POST SHELTER
3	INSTALL NEW CANTILEVER SHELTER
4	INSTALL NEW LARGE CANTILEVER SHELTER
5	INSTALL NEW BENCH
6	INSTALL NEW BIKE RACK
7	INSTALL NEW TRASH CAN
8	INSTALL NEW ETS
9	INSTALL NEW FSS
10	INSTALL NEW WFT
11	INSTALL NEW TVM
12	PREP. & INSTALL NEW CONCRETE PAD
13	NEW STRIPING-SEE DETAIL 1/29
14	NOT IN CONTRACT - FUTURE NEW TREE AND CONC SIDEWALK WORK FOR TREE
15	EXISTING SHELTER TO BE REMOVE BY OTHERS
16	NEW NO PARKING SIGN WITH DIRECTIONAL ARROWS

NOTE: SOUTH STOP INCLUDES ARTWORK - SEATING

50 Holden Street
Providence, Rhode Island 02908

Phone: (401) 272-1730
Fax: (401) 273-7156

E-mail: rgbinfo@rgb.net
www.rgb.net

RGB
Architecture · Engineering · Interior Design

Project
RIPTA R - LINE STATIONS
BROAD - NORTH MAIN

RIPTA
RHODE ISLAND PUBLIC TRANSIT AUTHORITY

PROVIDENCE / PAWTUCKET, RI

Contents
ROGER WILLIAMS NATIONAL MEMORIAL

Project No.	6060	Drawing No.	15
Checked by	JRR		
Issued	FEB 10, 2014	Sheet 13 of 28	

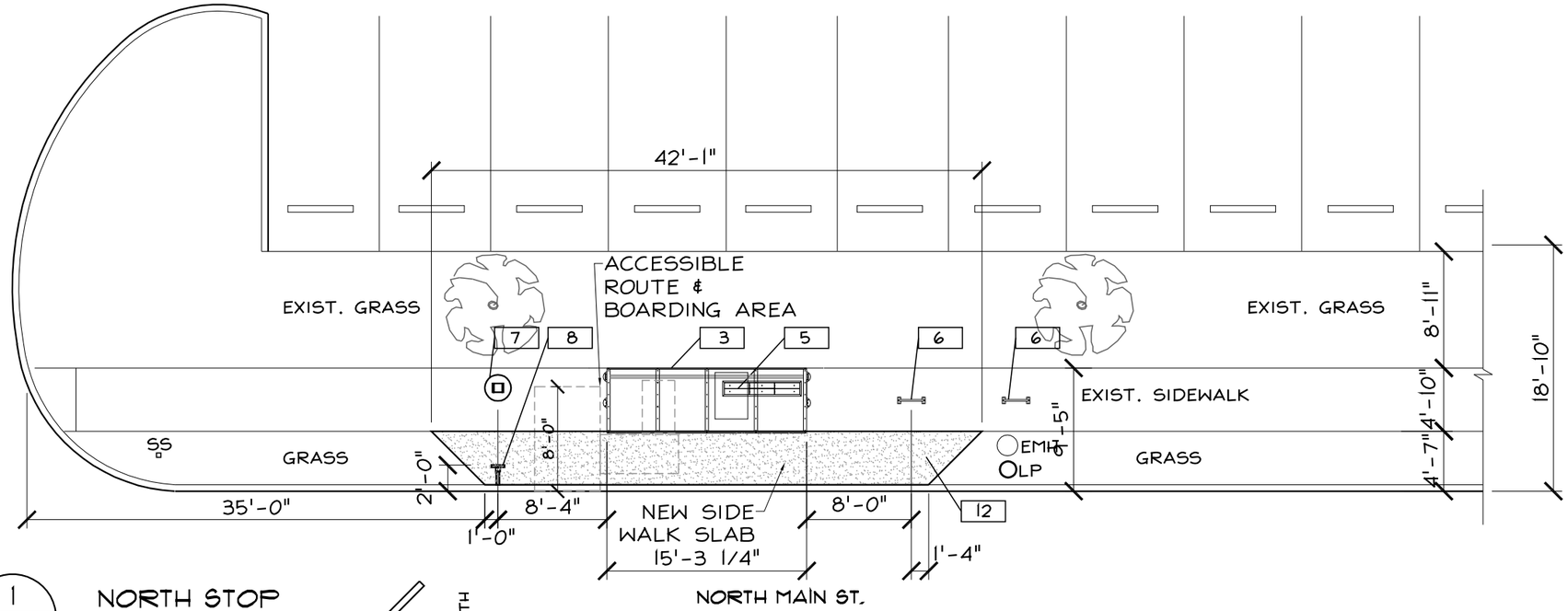

1/16 NORTH STOP

Scale: 3/32" = 1'-0"

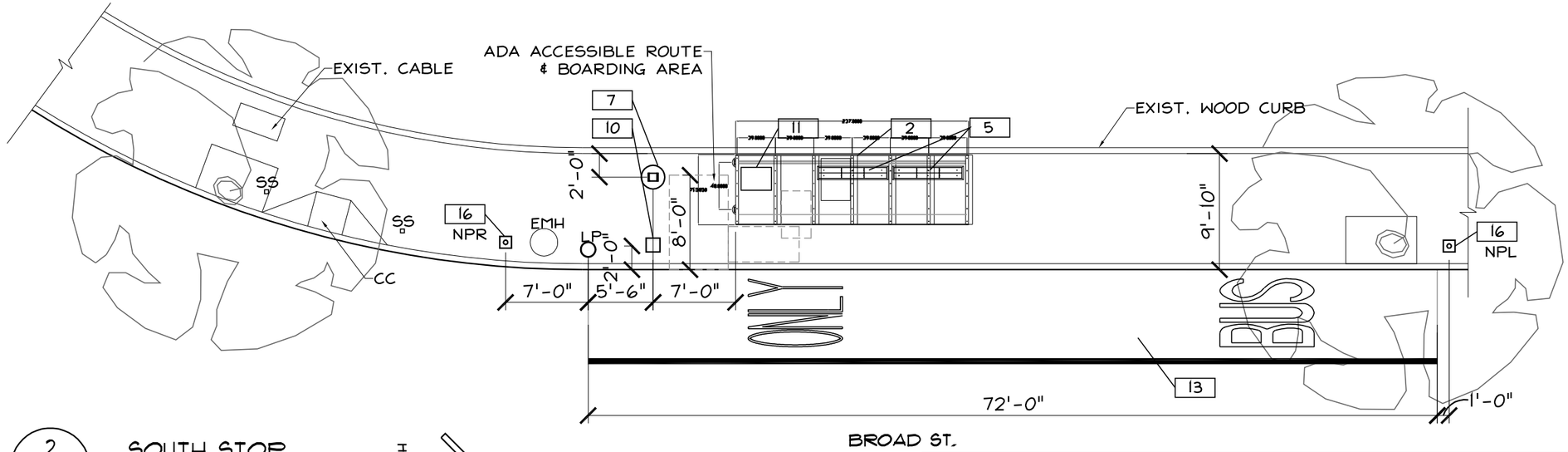

2/16 SOUTH STOP

Scale: 3/32" = 1'-0"

WORK NOTES

1	INSTALL NEW FOUR POST SHELTER
2	INSTALL NEW LARGE FOUR POST SHELTER
3	INSTALL NEW CANTILEVER SHELTER
4	INSTALL NEW LARGE CANTILEVER SHELTER
5	INSTALL NEW BENCH
6	INSTALL NEW BIKE RACK
7	INSTALL NEW TRASH CAN
8	INSTALL NEW ETS
9	INSTALL NEW FSS
10	INSTALL NEW WFT
11	INSTALL NEW TVM
12	PREP. ¢ INSTALL NEW CONCRETE PAD
13	NEW STRIPING-SEE DETAIL 1/29
14	NOT IN CONTRACT - FUTURE NEW TREE AND CONC SIDEWALK WORK FOR TREE
15	EXISTING SHELTER TO BE REMOVE BY OTHERS
16	NEW NO PARKING SIGN WITH DIRECTIONAL ARROWS

NOTE: NORTH STOP INCLUDES ARTWORK - A SHELTER PANEL

50 Holden Street
Providence, Rhode Island 02908

Phone: (401) 272-1730
Fax: (401) 273-7156

E-mail: rgbinfo@rgb.net
www.rgb.net

RGB
Architecture · Engineering · Interior Design

Project
RIPTA R - LINE STATIONS
BROAD - NORTH MAIN

RIPTA
RHODE ISLAND PUBLIC TRANSIT AUTHORITY

PROVIDENCE / PAWTUCKET, RI

Contents **UNIVERSITY HEIGHTS**

Project No. 6060	Drawing No. **16**
Checked by JRR	
Issued FEB 10, 2014	Sheet 14 of 28

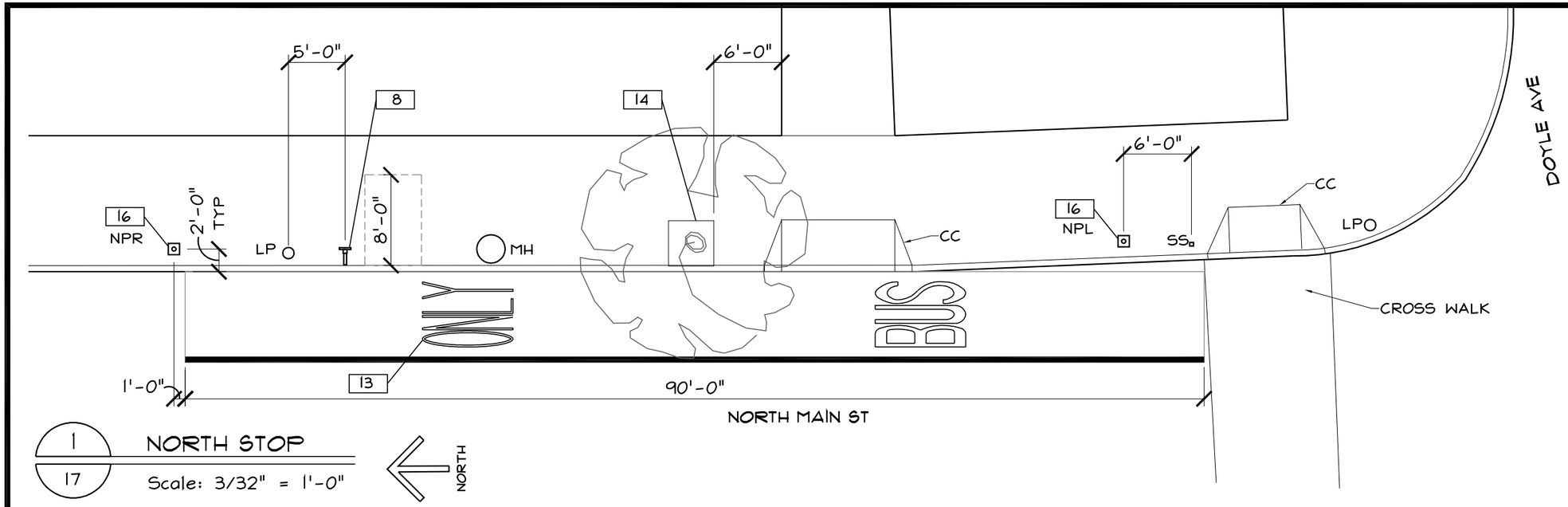

1 / 17 NORTH STOP

Scale: 3/32" = 1'-0"

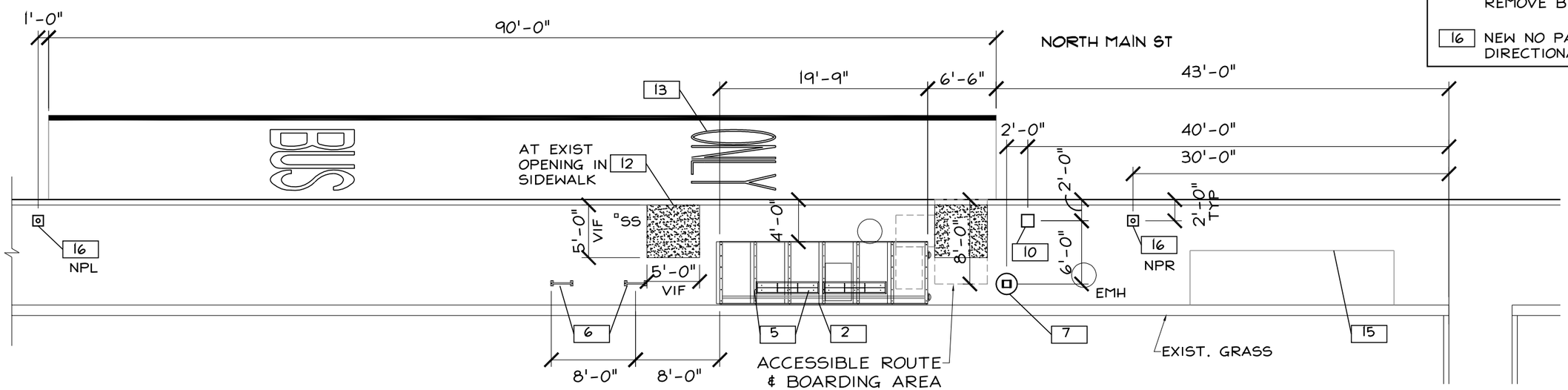

2 / 17 SOUTH STOP

Scale: 3/32" = 1'-0"

NORTH

WORK NOTES

1. INSTALL NEW FOUR POST SHELTER
2. INSTALL NEW LARGE FOUR POST SHELTER
3. INSTALL NEW CANTILEVER SHELTER
4. INSTALL NEW LARGE CANTILEVER SHELTER
5. INSTALL NEW BENCH
6. INSTALL NEW BIKE RACK
7. INSTALL NEW TRASH CAN
8. INSTALL NEW ETS
9. INSTALL NEW FSS
10. INSTALL NEW WFT
11. INSTALL NEW TVM
12. PREP. & INSTALL NEW CONCRETE PAD
13. NEW STRIPING-SEE DETAIL 1/29
14. NOT IN CONTRACT - FUTURE NEW TREE AND CONC SIDEWALK WORK FOR TREE
15. EXISTING SHELTER TO BE REMOVE BY OTHERS
16. NEW NO PARKING SIGN WITH DIRECTIONAL ARROWS

50 Holden Street
Providence, Rhode Island 02908

Phone: (401) 272-1730
Fax: (401) 273-7156

E-mail: rgbinfo@rgb.net
www.rgb.net

RGB

Architecture · Engineering · Interior Design

Project
RIPTA R - LINE STATIONS
BROAD - NORTH MAIN

RIPTA
RHODE ISLAND PUBLIC TRANSIT AUTHORITY

PROVIDENCE / PAWTUCKET, RI

Contents
CHARLESGATE

Project No.	6060	Drawing No.	17
Checked by	JRR		
Issued	FEB 10, 2014	Sheet 15 of 28	

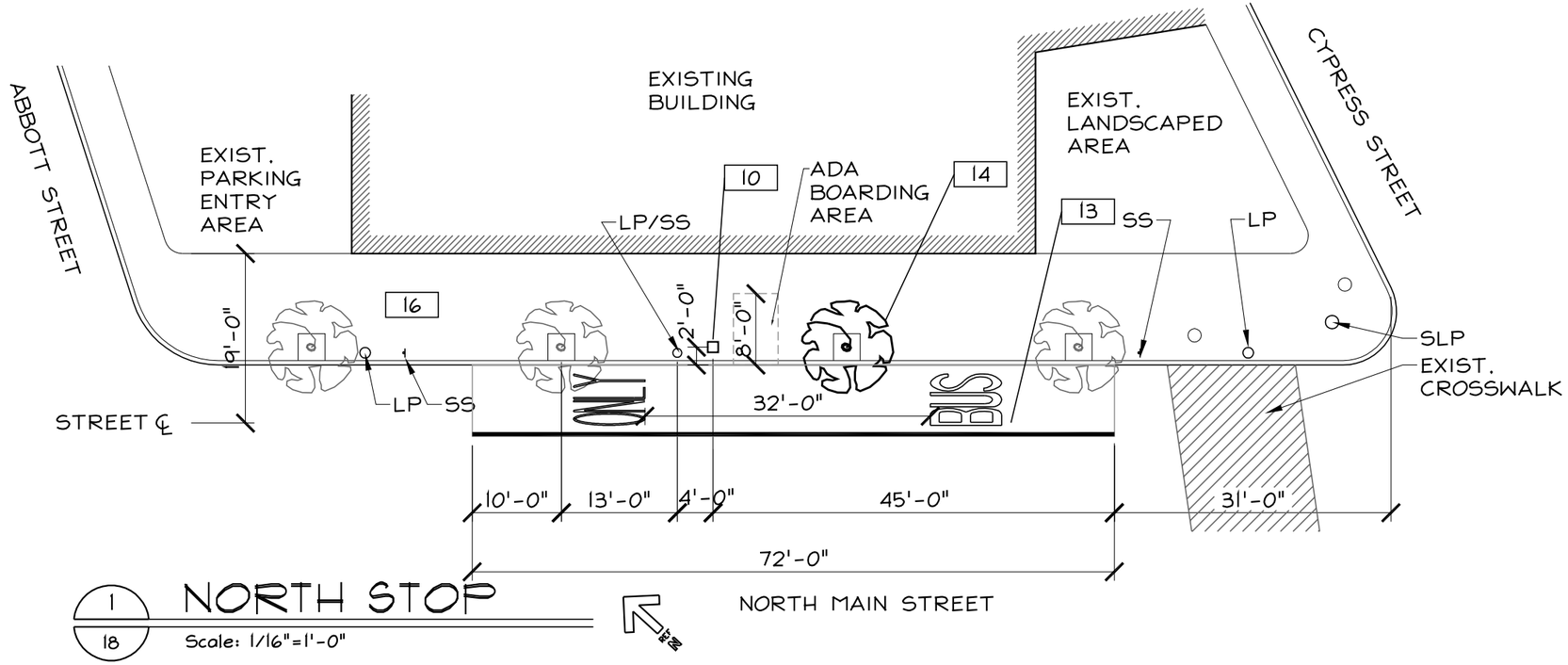

1/18 NORTH STOP

Scale: 1/16"=1'-0"

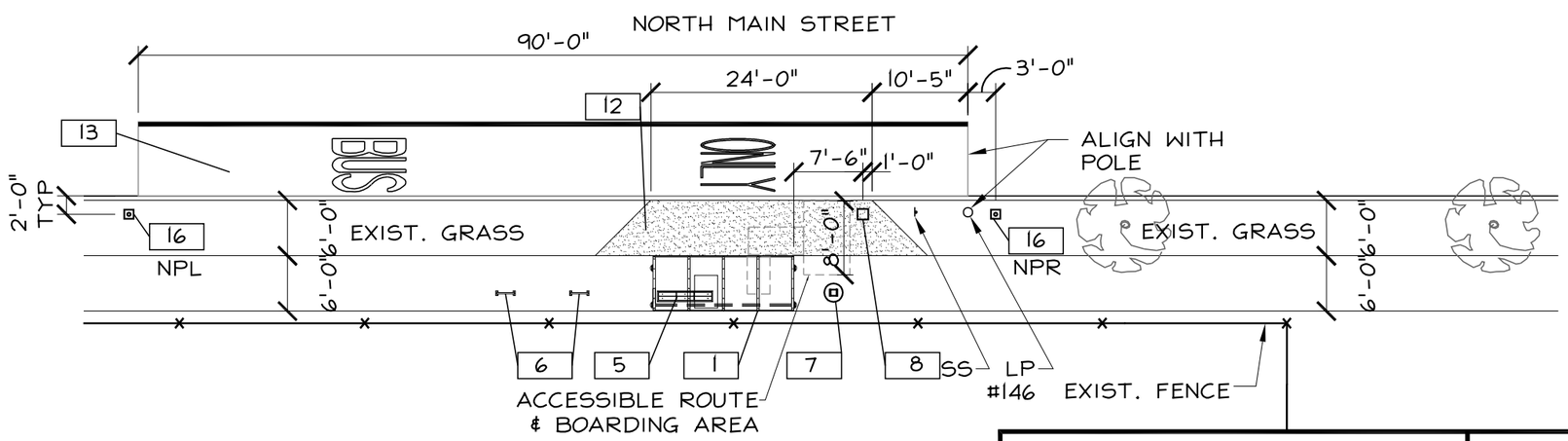

2/18 SOUTH STOP

Scale: 1/16"=1'-0"

WORK NOTES

1	INSTALL NEW FOUR POST SHELTER
2	INSTALL NEW LARGE FOUR POST SHELTER
3	INSTALL NEW CANTILEVER SHELTER
4	INSTALL NEW LARGE CANTILEVER SHELTER
5	INSTALL NEW BENCH
6	INSTALL NEW BIKE RACK
7	INSTALL NEW TRASH CAN
8	INSTALL NEW ETS
9	INSTALL NEW FSS
10	INSTALL NEW WFT
11	INSTALL NEW TVM
12	PREP. ℄ INSTALL NEW CONCRETE PAD
13	NEW STRIPING-SEE DETAIL 1/29
14	NOT IN CONTRACT - FUTURE NEW TREE AND CONC SIDEWALK WORK FOR TREE
15	EXISTING SHELTER TO BE REMOVE BY OTHERS
16	NEW NO PARKING SIGN WITH DIRECTIONAL ARROWS

NOTE: SOUTH STOP INCLUDES ARTWORK - SHELTER PANEL

50 Holden Street
Providence, Rhode Island 02908

Phone: (401) 272-1730
Fax: (401) 273-7156

E-mail: rgbinfo@rgb.net
www.rgb.net

RGB

Architecture · Engineering · Interior Design

Project
RIPTA R - LINE STATIONS
BROAD - NORTH MAIN

RIPTA
RHODE ISLAND PUBLIC TRANSIT AUTHORITY

PROVIDENCE / PAWTUCKET, RI

Contents
NORTH MAIN @ CYPRESS

Project No.	6060	Drawing No.	18
Checked by	JRR		
Issued	FEB 10, 2014	Sheet 16 of 28	

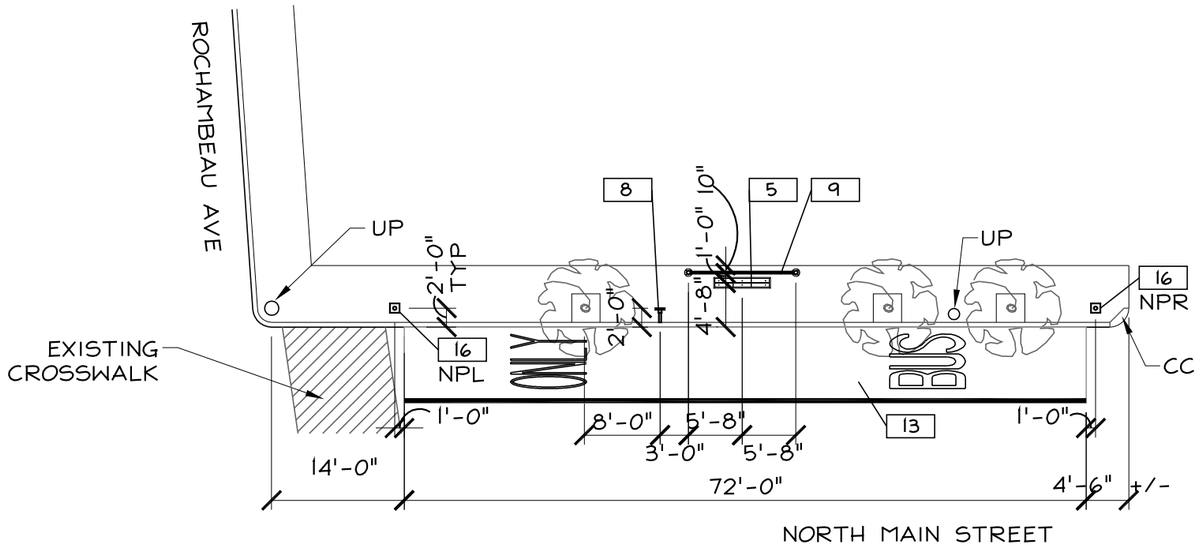

1 / 19 NORTH STOP

Scale: 1/16"=1'-0"

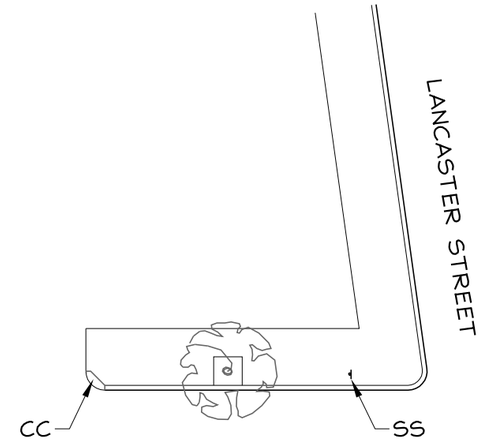

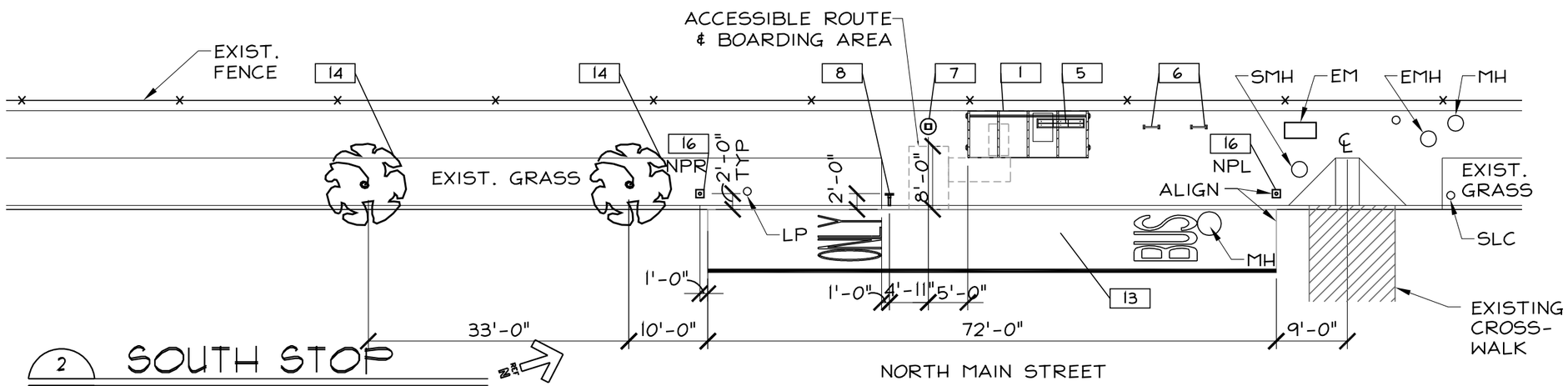

2 / 19 SOUTH STOP

Scale: 1/16"=1'-0"

WORK NOTES

1	INSTALL NEW FOUR POST SHELTER
2	INSTALL NEW LARGE FOUR POST SHELTER
3	INSTALL NEW CANTILEVER SHELTER
4	INSTALL NEW LARGE CANTILEVER SHELTER
5	INSTALL NEW BENCH
6	INSTALL NEW BIKE RACK
7	INSTALL NEW TRASH CAN
8	INSTALL NEW ETS
9	INSTALL NEW FSS
10	INSTALL NEW WFT
11	INSTALL NEW TVM
12	PREP. & INSTALL NEW CONCRETE PAD
13	NEW STRIPING-SEE DETAIL 1/29
14	NOT IN CONTRACT - FUTURE NEW TREE AND CONC SIDEWALK WORK FOR TREE
15	EXISTING SHELTER TO BE REMOVE BY OTHERS
16	NEW NO PARKING SIGN WITH DIRECTIONAL ARROWS

NOTE: NORTH & SOUTH STOPS INCLUDE ARTWORK
- NORTH STOP IS A SCREEN PANEL
- SOUTH STOP IS A SHELTER PANEL

50 Holden Street
Providence, Rhode Island 02908

Phone: (401) 272-1730
Fax: (401) 273-7156

E-mail: rgbinfo@rgb.net
www.rgb.net

RGB

Architecture · Engineering · Interior Design

Project
RIPTA R - LINE STATIONS
BROAD - NORTH MAIN

RIPTA
RHODE ISLAND PUBLIC TRANSIT AUTHORITY

PROVIDENCE / PAWTUCKET, RI

Contents
NORTH MAIN @ ROCHAMBEAU

Project No.	6060	Drawing No.	19
Checked by	JRR		
Issued	FEB 10, 2014	Sheet 17 of 28	

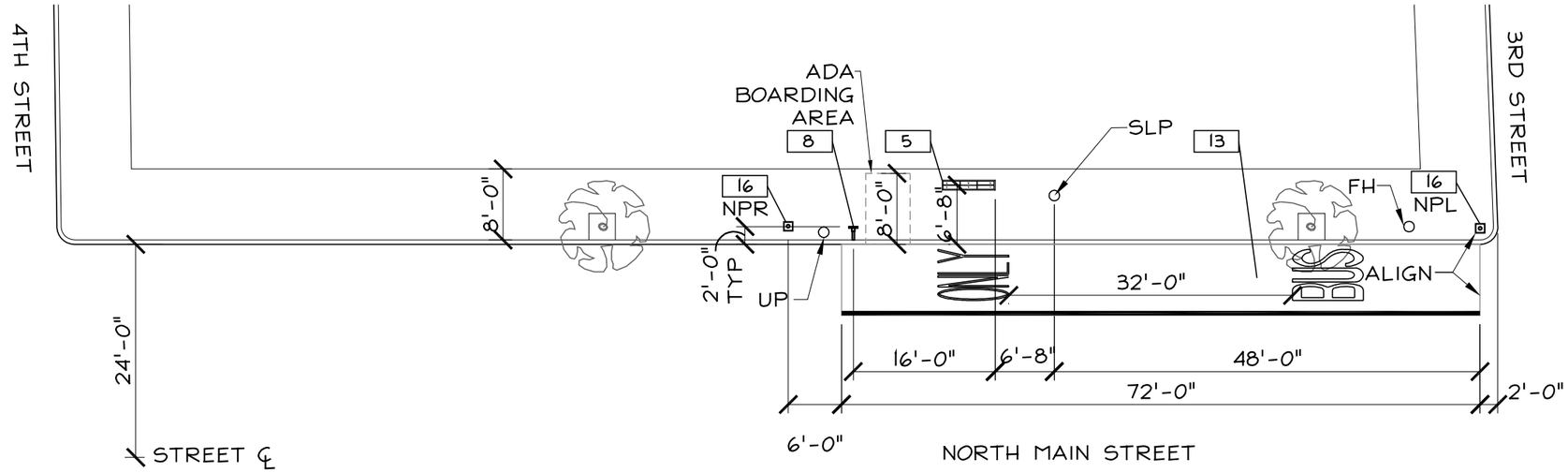

2/20 NORTH STOP

Scale: 1/16"=1'-0"

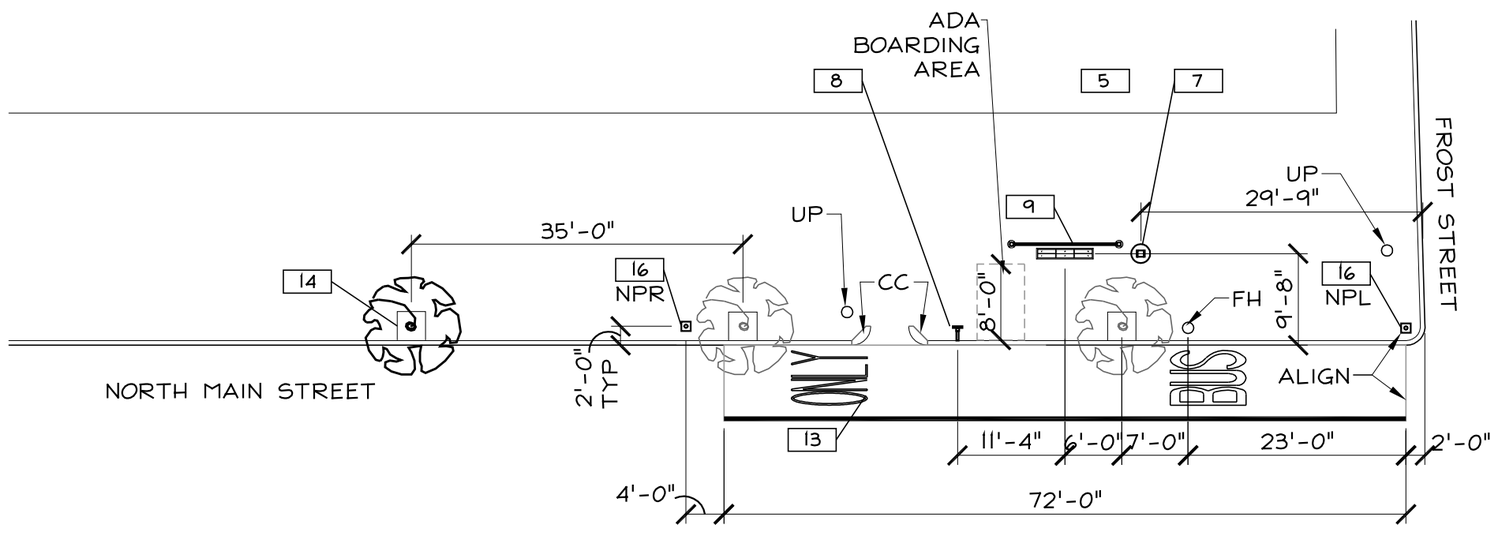

1/20 SOUTH STOP

Scale: 1/16"=1'-0"

WORK NOTES

1	INSTALL NEW FOUR POST SHELTER
2	INSTALL NEW LARGE FOUR POST SHELTER
3	INSTALL NEW CANTILEVER SHELTER
4	INSTALL NEW LARGE CANTILEVER SHELTER
5	INSTALL NEW BENCH
6	INSTALL NEW BIKE RACK
7	INSTALL NEW TRASH CAN
8	INSTALL NEW ETS
9	INSTALL NEW FSS
10	INSTALL NEW WFT
11	INSTALL NEW TVM
12	PREP. & INSTALL NEW CONCRETE PAD
13	NEW STRIPING-SEE DETAIL 1/29
14	NOT IN CONTRACT - FUTURE NEW TREE AND CONC SIDEWALK WORK FOR TREE
15	EXISTING SHELTER TO BE REMOVE BY OTHERS
16	NEW NO PARKING SIGN WITH DIRECTIONAL ARROWS

NOTE: SOUTH STOP INCLUDES ARTWORK-
NORTH STOP IS SEATING ONLY
- SOUTH STOP IS SEATING & SCREEN PANEL

50 Holden Street
Providence, Rhode Island 02908

Phone: (401) 272-1730
Fax: (401) 273-7156

E-mail: rgbinfo@rgb.net
www.rgb.net

RGB
Architecture · Engineering · Interior Design

Project
RIPTA R - LINE STATIONS
BROAD - NORTH MAIN

RIPTA
RHODE ISLAND PUBLIC TRANSIT AUTHORITY

PROVIDENCE / PAWTUCKET, RI

Contents **NORTH MAIN @ THIRD**

Project No.	6060	Drawing No.	20
Checked by	JRR		
Issued	FEB 10, 2014	Sheet 18 of 28	

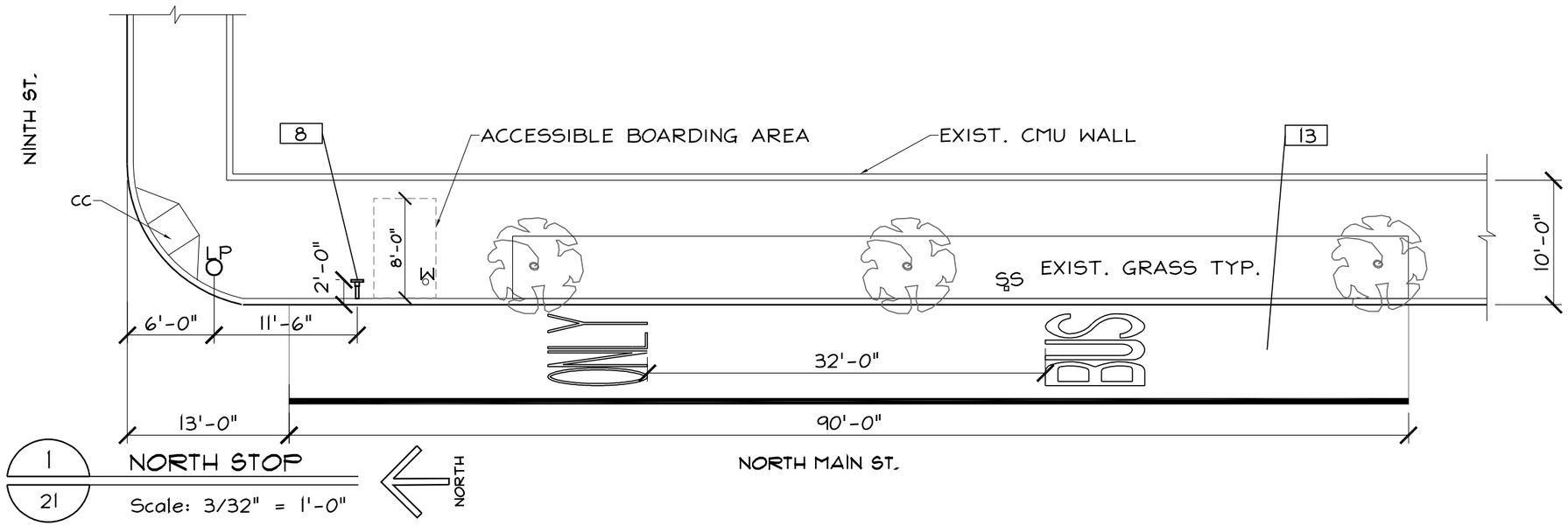

1 / 21 NORTH STOP

Scale: 3/32" = 1'-0"

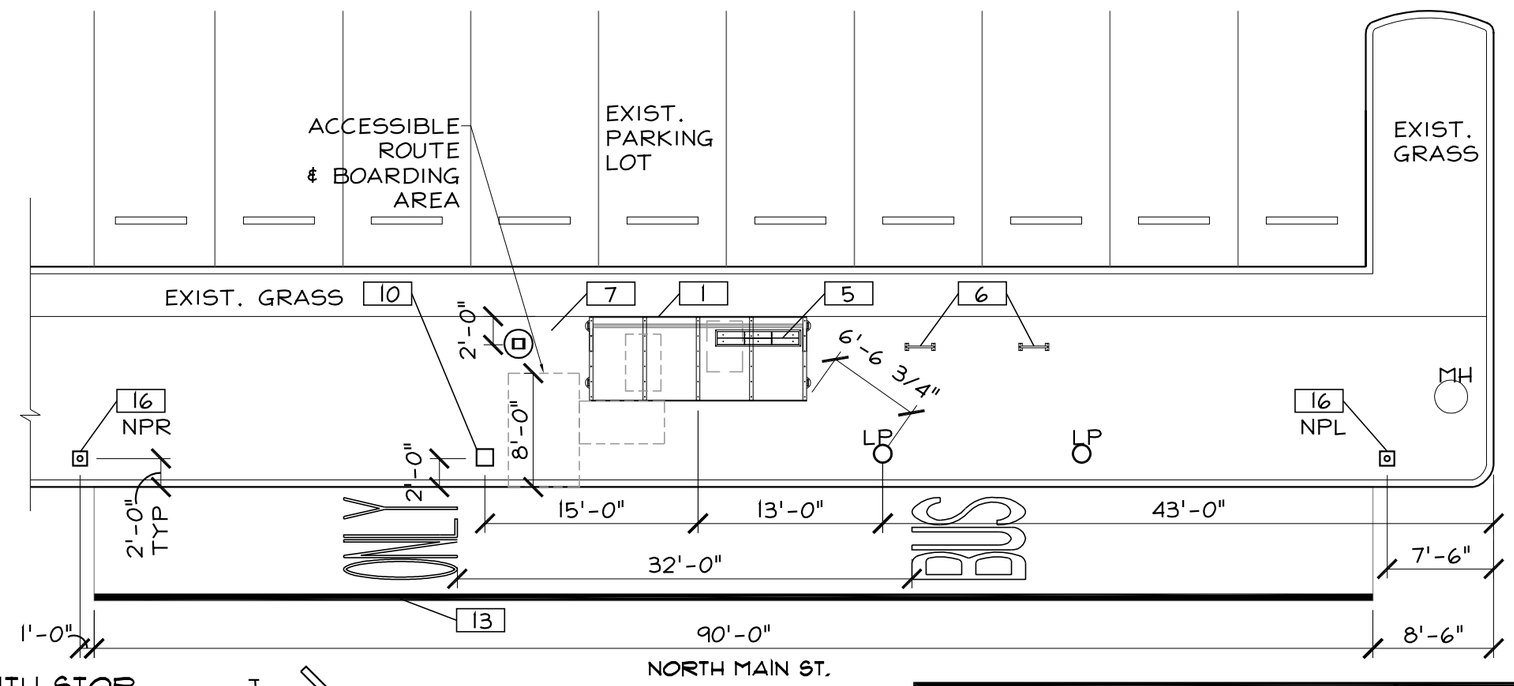

2 / 21 SOUTH STOP

Scale: 3/32" = 1'-0"

WORK NOTES

1	INSTALL NEW FOUR POST SHELTER
2	INSTALL NEW LARGE FOUR POST SHELTER
3	INSTALL NEW CANTILEVER SHELTER
4	INSTALL NEW LARGE CANTILEVER SHELTER
5	INSTALL NEW BENCH
6	INSTALL NEW BIKE RACK
7	INSTALL NEW TRASH CAN
8	INSTALL NEW ETS
9	INSTALL NEW FSS
10	INSTALL NEW WFT
11	INSTALL NEW TVM
12	PREP. & INSTALL NEW CONCRETE PAD
13	NEW STRIPING-SEE DETAIL 1/29
14	NOT IN CONTRACT - FUTURE NEW TREE AND CONC SIDEWALK WORK FOR TREE
15	EXISTING SHELTER TO BE REMOVE BY OTHERS
16	NEW NO PARKING SIGN WITH DIRECTIONAL ARROWS

NOTE: SOUTH STOP INCLUDES AETWORK-SHELTER PANEL

50 Holden Street
Providence, Rhode Island 02908

Phone: (401) 272-1730
Fax: (401) 273-7156

E-mail: rgbinfo@rgb.net
www.rgb.net

RGB

Architecture · Engineering · Interior Design

Project
RIPTA R - LINE STATIONS
BROAD - NORTH MAIN

RIPTA
RHODE ISLAND PUBLIC TRANSIT AUTHORITY

PROVIDENCE / PAWTUCKET, RI

Contents
NORTH MAIN AT NINTH

Project No. 6060	Drawing No. **21**
Checked by JRR	
Issued FEB 10, 2014	Sheet 19 of 28

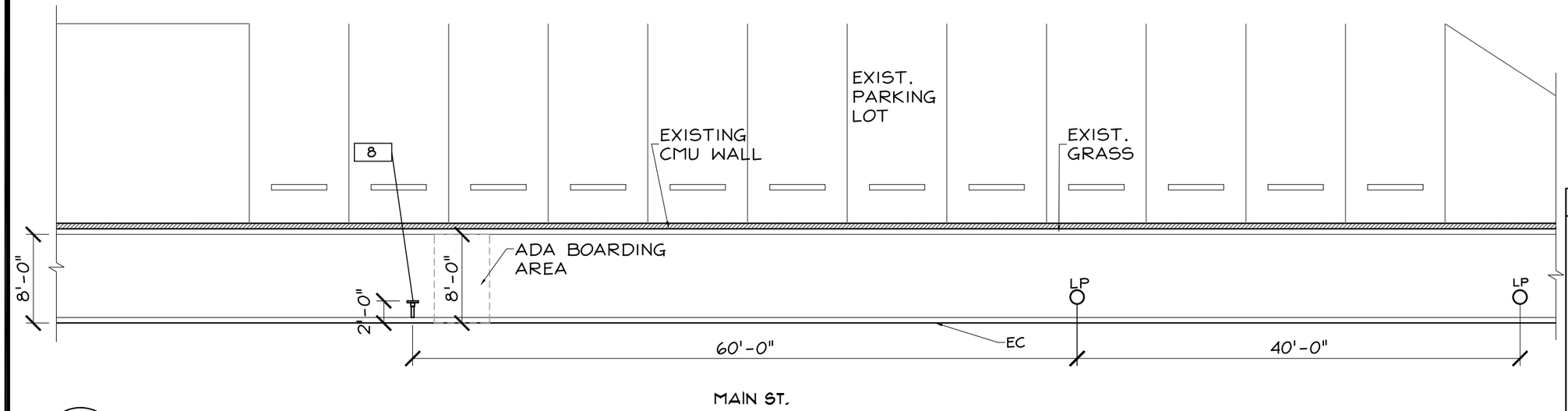

1 / 22 NORTH STOP

Scale: 3/32" = 1'-0"

NORTH

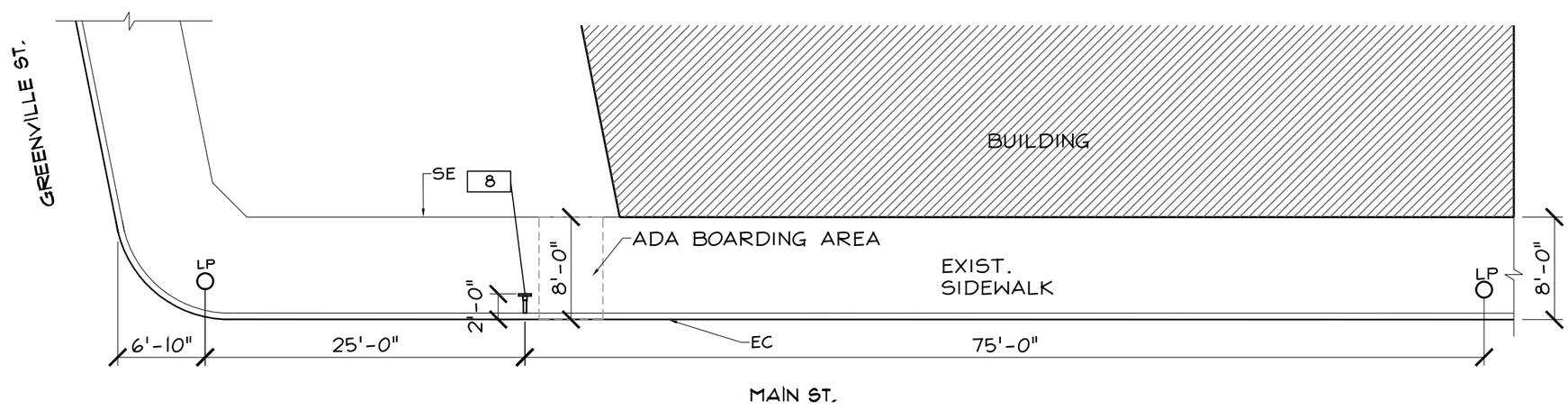

2 / 22 SOUTH STOP

Scale: 3/32" = 1'-0"

NORTH

WORK NOTES

1. INSTALL NEW FOUR POST SHELTER
2. INSTALL NEW LARGE FOUR POST SHELTER
3. INSTALL NEW CANTILEVER SHELTER
4. INSTALL NEW LARGE CANTILEVER SHELTER
5. INSTALL NEW BENCH
6. INSTALL NEW BIKE RACK
7. INSTALL NEW TRASH CAN
8. INSTALL NEW ETS
9. INSTALL NEW FSS
10. INSTALL NEW WFT
11. INSTALL NEW TVM
12. PREP. & INSTALL NEW CONCRETE PAD
13. NEW STRIPING-SEE DETAIL 1/29
14. NOT IN CONTRACT - FUTURE NEW TREE AND CONC SIDEWALK WORK FOR TREE
15. EXISTING SHELTER TO BE REMOVE BY OTHERS
16. NEW NO PARKING SIGN WITH DIRECTIONAL ARROWS

50 Holden Street
Providence, Rhode Island 02908

Phone: (401) 272-1730
Fax: (401) 273-7156

E-mail: rgbinfo@rgb.net
www.rgb.net

RGB

Architecture · Engineering · Interior Design

Project
RIPTA R - LINE STATIONS
BROAD - NORTH MAIN

RIPTA
RHODE ISLAND PUBLIC TRANSIT AUTHORITY

PROVIDENCE / PAWTUCKET, RI

Contents **MAIN AT GREENVILLE**

Project No. 6060	Drawing No. **22**
Checked by JRR	
Issued FEB 10, 2014	Sheet 20 of 28

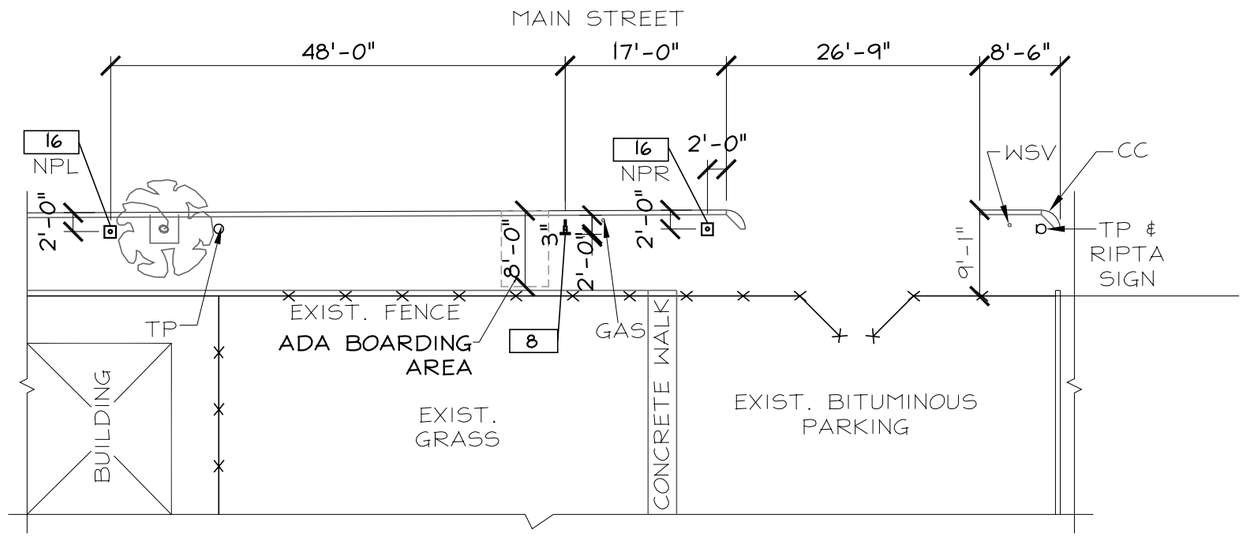

2/23 NORTH STOP

Scale: 1/16"=1'-0"

N

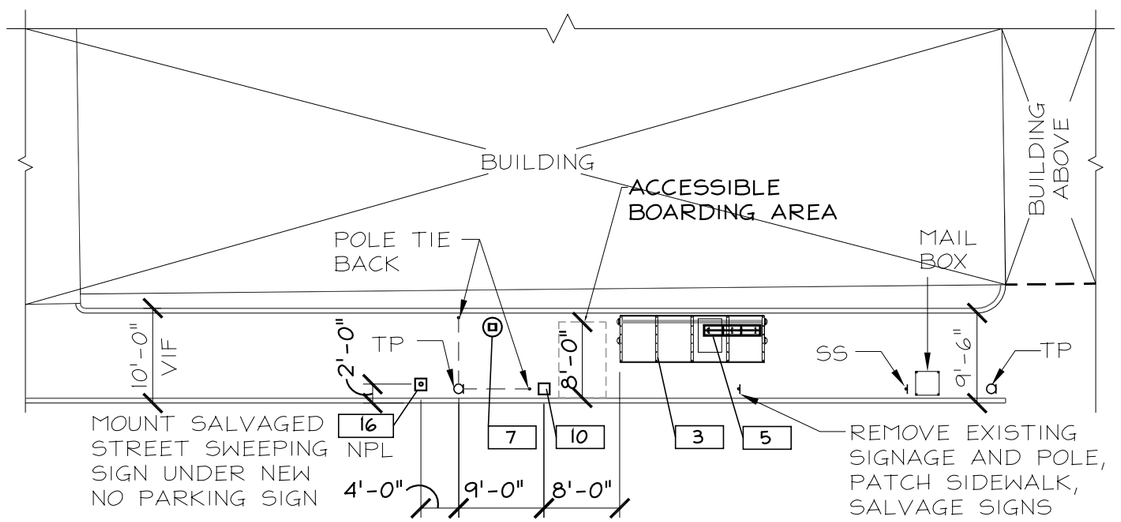

1/23 SOUTH STOP

Scale: 1/16"=1'-0"

N MAIN STREET

WORK NOTES	
1	INSTALL NEW FOUR POST SHELTER
2	INSTALL NEW LARGE FOUR POST SHELTER
3	INSTALL NEW CANTILEVER SHELTER
4	INSTALL NEW LARGE CANTILEVER SHELTER
5	INSTALL NEW BENCH
6	INSTALL NEW BIKE RACK
7	INSTALL NEW TRASH CAN
8	INSTALL NEW ETS
9	INSTALL NEW FSS
10	INSTALL NEW WFT
11	INSTALL NEW TVM
12	PREP. & INSTALL NEW CONCRETE PAD
13	NEW STRIPING-SEE DETAIL 1/29
14	NOT IN CONTRACT - FUTURE NEW TREE AND CONC SIDEWALK WORK FOR TREE
15	EXISTING SHELTER TO BE REMOVE BY OTHERS
16	NEW NO PARKING SIGN WITH DIRECTIONAL ARROWS

50 Holden Street
Providence, Rhode Island 02908

Phone: (401) 272-1730
Fax: (401) 273-7156

E-mail: rgbinfo@rgb.net
www.rgb.net

RGB

Architecture · Engineering · Interior Design

Project
RIPTA R - LINE STATIONS
BROAD - NORTH MAIN

RIPTA
RHODE ISLAND PUBLIC TRANSIT AUTHORITY

PROVIDENCE / PAWTUCKET, RI

Contents
HOPE ARTISTE VILLAGE

Project No.	6060	Drawing No.	23
Checked by	JRR		
Issued	FEB 10, 2014	Sheet 21 of 28	

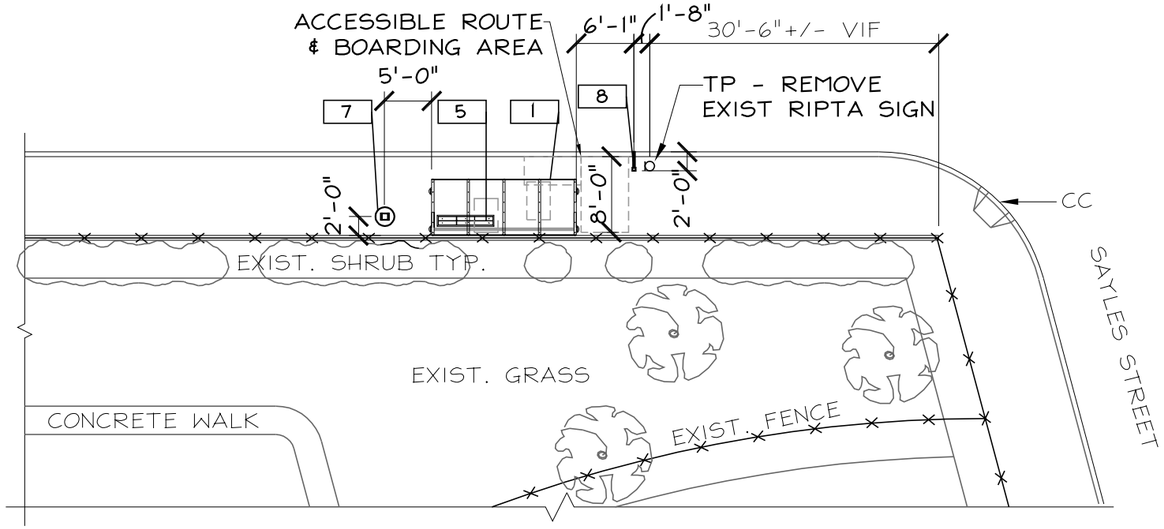

2/24 NORTH STOP

Scale: 1/16"=1'-0"

N

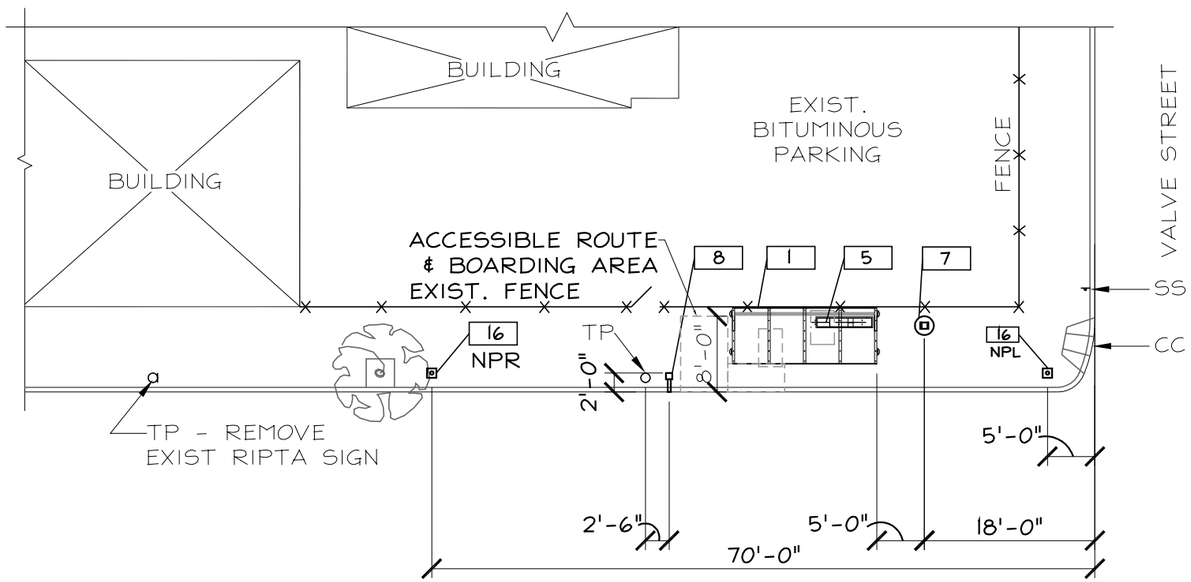

1/24 SOUTH STOP

Scale: 1/16"=1'-0"

N

WORK NOTES

1	INSTALL NEW FOUR POST SHELTER
2	INSTALL NEW LARGE FOUR POST SHELTER
3	INSTALL NEW CANTILEVER SHELTER
4	INSTALL NEW LARGE CANTILEVER SHELTER
5	INSTALL NEW BENCH
6	INSTALL NEW BIKE RACK
7	INSTALL NEW TRASH CAN
8	INSTALL NEW ETS
9	INSTALL NEW FSS
10	INSTALL NEW WFT
11	INSTALL NEW TVM
12	PREP. ℄ INSTALL NEW CONCRETE PAD
13	NEW STRIPING-SEE DETAIL 1/29
14	NOT IN CONTRACT - FUTURE NEW TREE AND CONC SIDEWALK WORK FOR TREE
15	EXISTING SHELTER TO BE REMOVE BY OTHERS
16	NEW NO PARKING SIGN WITH DIRECTIONAL ARROWS

50 Holden Street
Providence, Rhode Island 02908

Phone: (401) 272-1730
Fax: (401) 273-7156

E-mail: rgbinfo@rgb.net
www.rgb.net

RGB
Architecture · Engineering · Interior Design

Project
RIPTA R - LINE STATIONS
BROAD - NORTH MAIN

RIPTA
RHODE ISLAND PUBLIC TRANSIT AUTHORITY

PROVIDENCE / PAWTUCKET, RI

Contents
MAIN AT SAYLES

Project No.	6060	Drawing No.	**24**
Checked by	JRR		
Issued	FEB 10, 2014	Sheet 22 of 28	

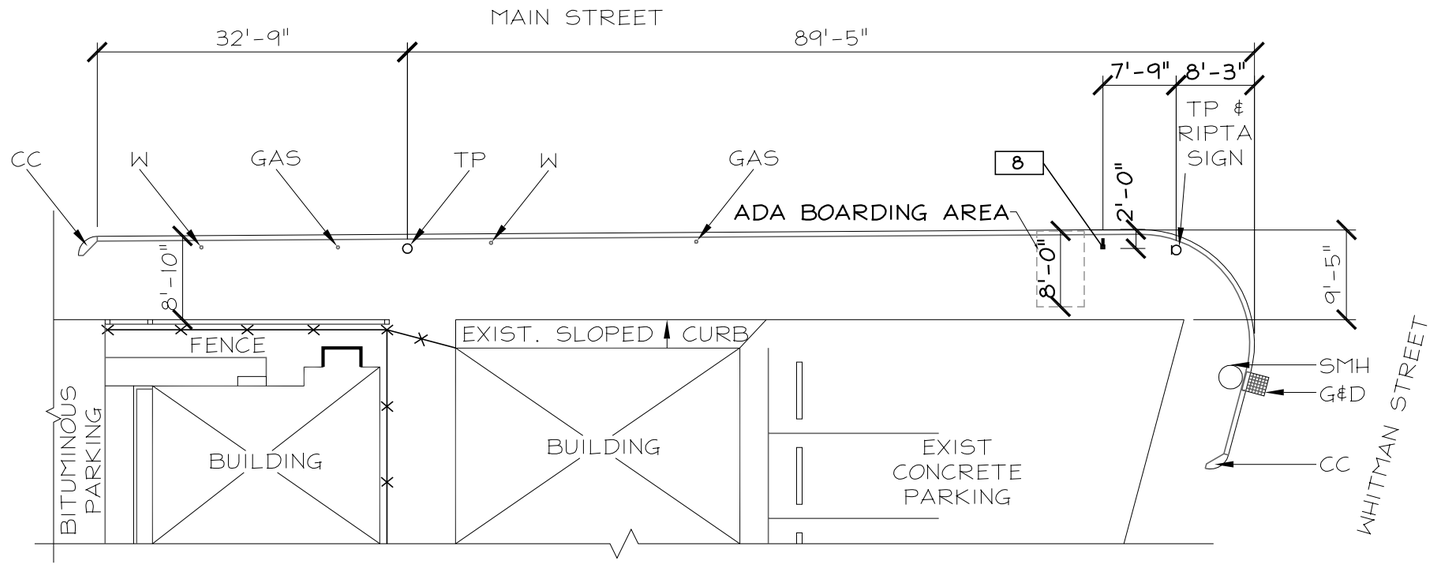

2/25 NORTH STOP

Scale: 1/16"=1'-0"

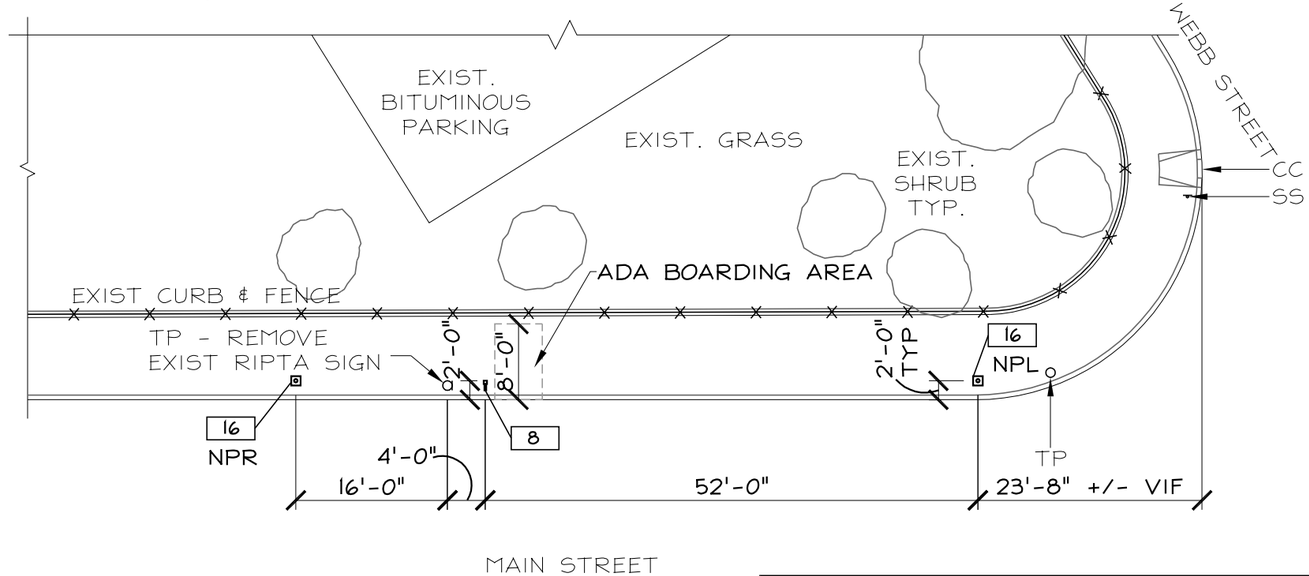

1/25 SOUTH STOP

Scale: 1/16"=1'-0"

WORK NOTES

1	INSTALL NEW FOUR POST SHELTER
2	INSTALL NEW LARGE FOUR POST SHELTER
3	INSTALL NEW CANTILEVER SHELTER
4	INSTALL NEW LARGE CANTILEVER SHELTER
5	INSTALL NEW BENCH
6	INSTALL NEW BIKE RACK
7	INSTALL NEW TRASH CAN
8	INSTALL NEW ETS
9	INSTALL NEW FSS
10	INSTALL NEW WFT
11	INSTALL NEW TVM
12	PREP. ¢ INSTALL NEW CONCRETE PAD
13	NEW STRIPING-SEE DETAIL 1/29
14	NOT IN CONTRACT - FUTURE NEW TREE AND CONC SIDEWALK WORK FOR TREE
15	EXISTING SHELTER TO BE REMOVE BY OTHERS
16	NEW NO PARKING SIGN WITH DIRECTIONAL ARROWS

50 Holden Street
Providence, Rhode Island 02908

Phone: (401) 272-1730
Fax: (401) 273-7156

E-mail: rgbinfo@rgb.net
www.rgb.net

RGB
Architecture · Engineering · Interior Design

Project
RIPTA R - LINE STATIONS
BROAD - NORTH MAIN

RIPTA
RHODE ISLAND PUBLIC TRANSIT AUTHORITY

PROVIDENCE / PAWTUCKET, RI

Contents **MAIN AT WHITMAN**

Project No. 6060	Drawing No. **25**
Checked by JRR	
Issued FEB 10, 2014	Sheet 23 of 28

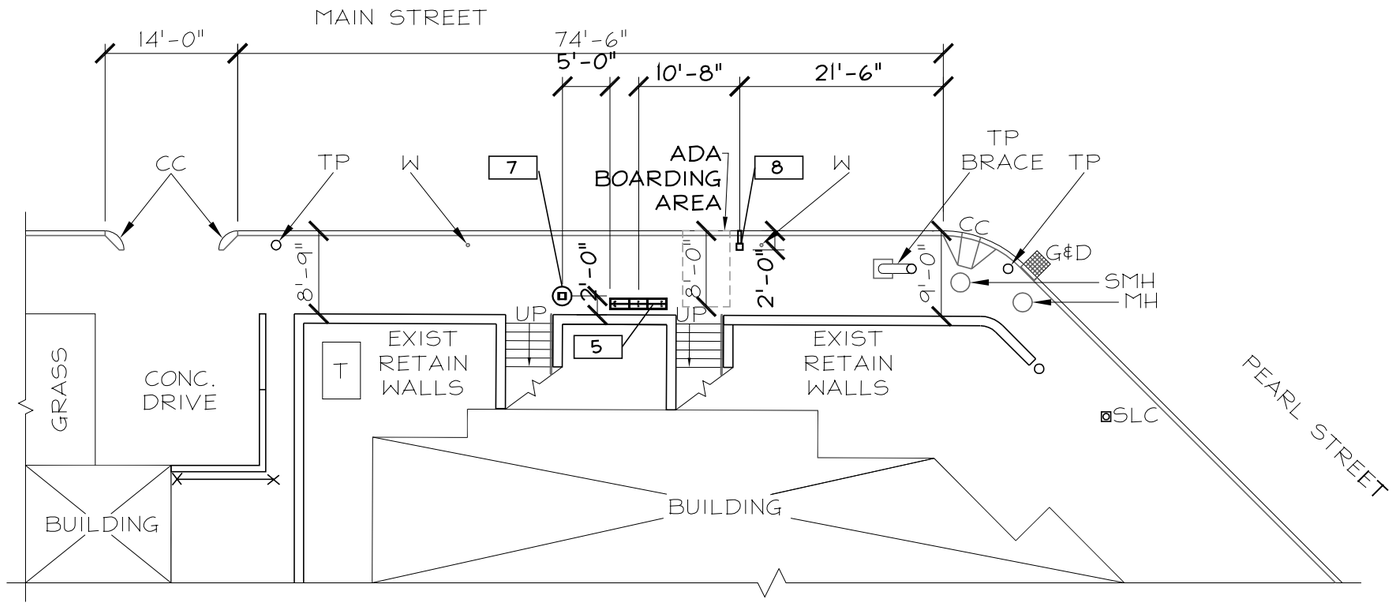

2/26 NORTH STOP

Scale: 1/16"=1'-0"

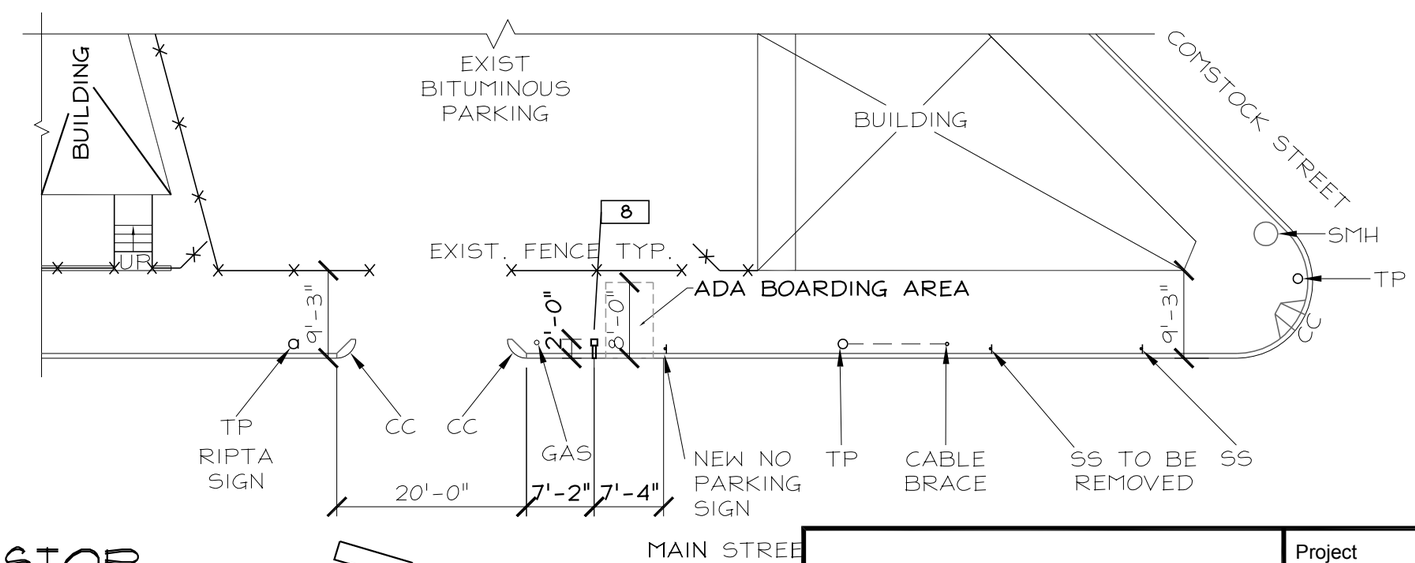

1/26 SOUTH STOP

Scale: 1/16"=1'-0"

WORK NOTES

1	INSTALL NEW FOUR POST SHELTER
2	INSTALL NEW LARGE FOUR POST SHELTER
3	INSTALL NEW CANTILEVER SHELTER
4	INSTALL NEW LARGE CANTILEVER SHELTER
5	INSTALL NEW BENCH
6	INSTALL NEW BIKE RACK
7	INSTALL NEW TRASH CAN
8	INSTALL NEW ETS
9	INSTALL NEW FSS
10	INSTALL NEW WFT
11	INSTALL NEW TVM
12	PREP. & INSTALL NEW CONCRETE PAD
13	NEW STRIPING-SEE DETAIL 1/29
14	NOT IN CONTRACT - FUTURE NEW TREE AND CONC SIDEWALK WORK FOR TREE
15	EXISTING SHELTER TO BE REMOVE BY OTHERS
16	NEW NO PARKING SIGN WITH DIRECTIONAL ARROWS

50 Holden Street
Providence, Rhode Island 02908

Phone: (401) 272-1730
Fax: (401) 273-7156

E-mail: rgbinfo@rgb.net
www.rgb.net

RGB
Architecture · Engineering · Interior Design

Project
RIPTA R - LINE STATIONS
BROAD - NORTH MAIN

RIPTA
RHODE ISLAND PUBLIC TRANSIT AUTHORITY

PROVIDENCE / PAWTUCKET, RI

Contents

MAIN AT PEARL

Project No.	6060	Drawing No.	26
Checked by	JRR		
Issued	FEB 10, 2014	Sheet 24 of 28	

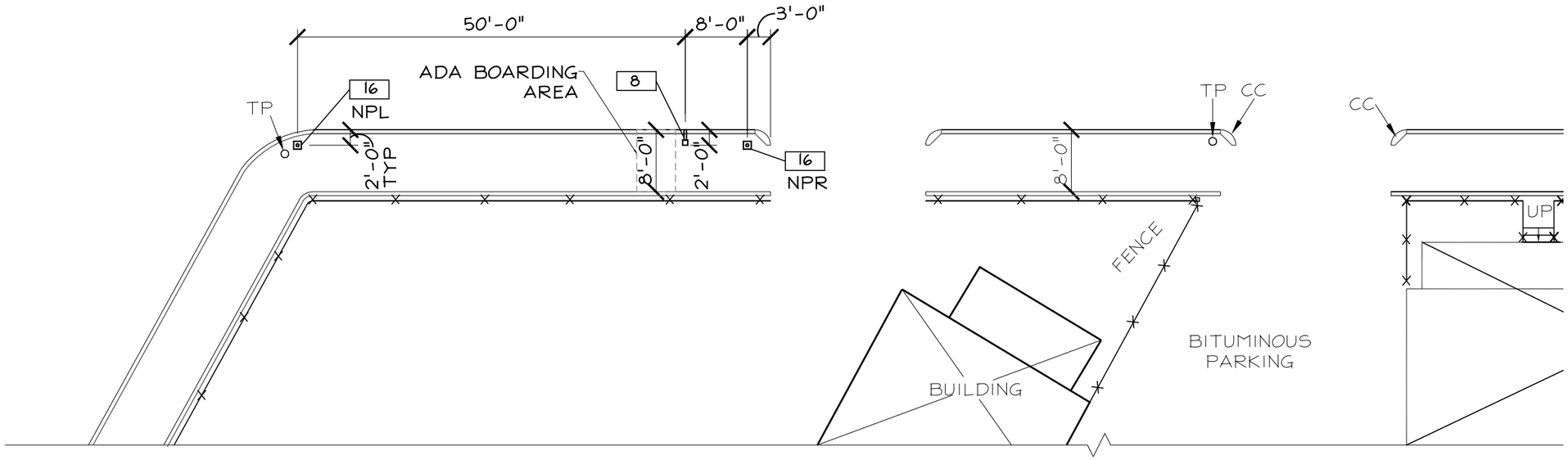

2 / 27 NORTH STOP

Scale: 1/16"=1'-0"

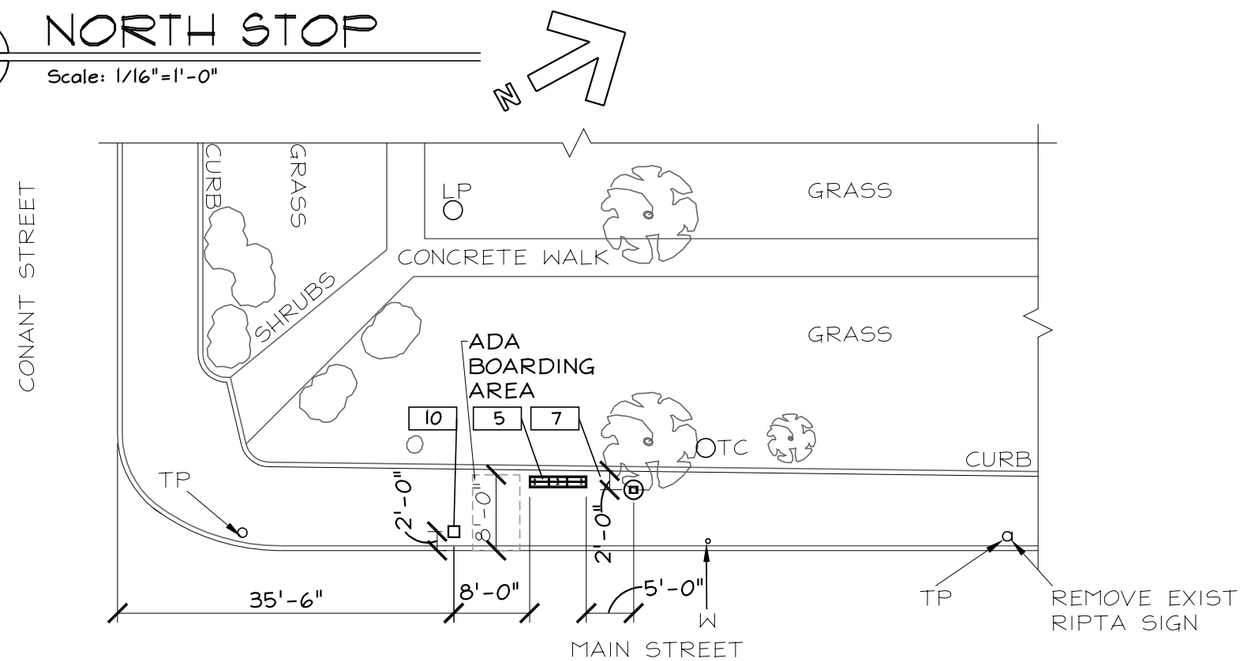

1 / 27 SOUTH STOP

Scale: 1/16"=1'-0"

WORK NOTES

1. INSTALL NEW FOUR POST SHELTER
2. INSTALL NEW LARGE FOUR POST SHELTER
3. INSTALL NEW CANTILEVER SHELTER
4. INSTALL NEW LARGE CANTILEVER SHELTER
5. INSTALL NEW BENCH
6. INSTALL NEW BIKE RACK
7. INSTALL NEW TRASH CAN
8. INSTALL NEW ETS
9. INSTALL NEW FSS
10. INSTALL NEW WFT
11. INSTALL NEW TVM
12. PREP. & INSTALL NEW CONCRETE PAD
13. NEW STRIPING-SEE DETAIL 1/29
14. NOT IN CONTRACT - FUTURE NEW TREE AND CONC SIDEWALK WORK FOR TREE
15. EXISTING SHELTER TO BE REMOVE BY OTHERS
16. NEW NO PARKING SIGN WITH DIRECTIONAL ARROWS

50 Holden Street
Providence, Rhode Island 02908

Phone: (401) 272-1730
Fax: (401) 273-7156

E-mail: rgbinfo@rgb.net
www.rgb.net

RGB

Architecture · Engineering · Interior Design

Project
RIPTA R - LINE STATIONS
BROAD - NORTH MAIN

RIPTA
RHODE ISLAND PUBLIC TRANSIT AUTHORITY

PROVIDENCE / PAWTUCKET, RI

Contents **COLLYER PARK**

Project No. 6060	Drawing No. **27**
Checked by JRR	
Issued FEB 10, 2014	Sheet 25 of 28

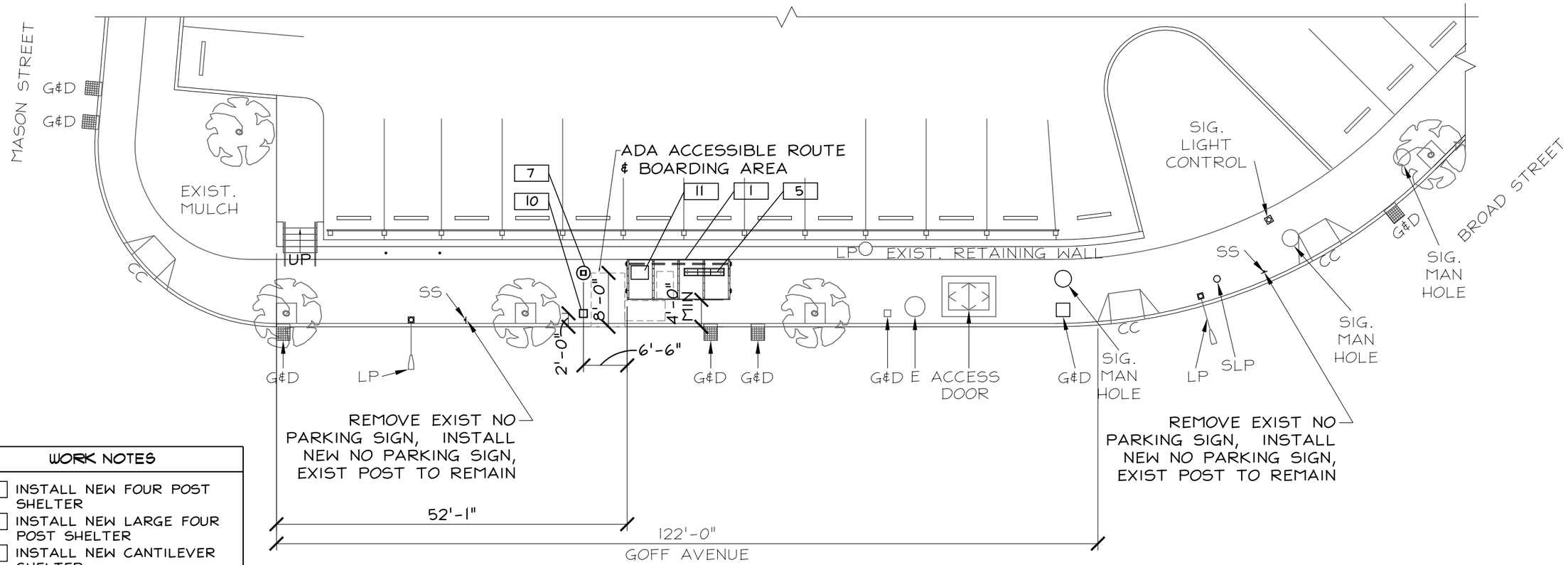

1
28
SOUTH STOP
Scale: 1/16"=1'-0"

N

WORK NOTES	
1	INSTALL NEW FOUR POST SHELTER
2	INSTALL NEW LARGE FOUR POST SHELTER
3	INSTALL NEW CANTILEVER SHELTER
4	INSTALL NEW LARGE CANTILEVER SHELTER
5	INSTALL NEW BENCH
6	INSTALL NEW BIKE RACK
7	INSTALL NEW TRASH CAN
8	INSTALL NEW ETS
9	INSTALL NEW FSS
10	INSTALL NEW WFT
11	INSTALL NEW TVM
12	PREP. ¢ INSTALL NEW CONCRETE PAD
13	NEW STRIPING-SEE DETAIL 1/29
14	NOT IN CONTRACT - FUTURE NEW TREE AND CONC SIDEWALK WORK FOR TREE
15	EXISTING SHELTER TO BE REMOVE BY OTHERS
16	NEW NO PARKING SIGN WITH DIRECTIONAL ARROWS

50 Holden Street
Providence, Rhode Island 02908

Phone: (401) 272-1730
Fax: (401) 273-7156

E-mail: rgbinfo@rgb.net
www.rgb.net

RGB
Architecture · Engineering · Interior Design

Project
RIPTA R - LINE STATIONS
BROAD - NORTH MAIN

RIPTA
RHODE ISLAND PUBLIC TRANSIT AUTHORITY

PROVIDENCE / PAWTUCKET, RI

Contents **BROAD AT GOFF**

Project No.	6060	Drawing No.	**28**
Checked by	JRR		
Issued	FEB 10, 2014	Sheet 26 of 28	

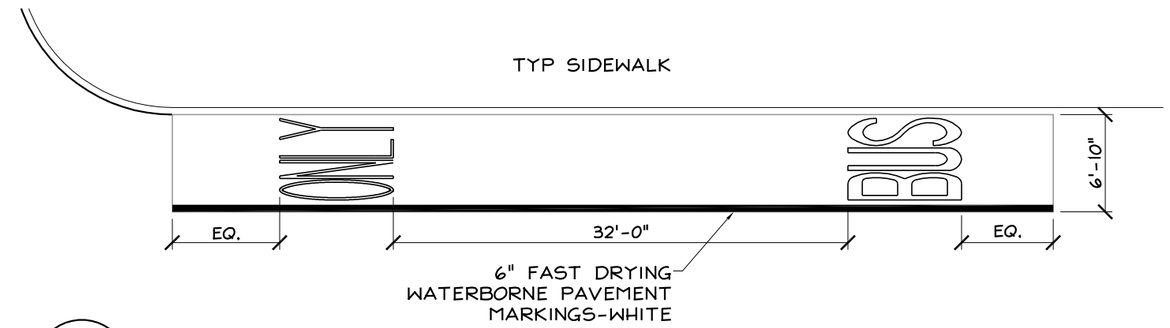

1 / 29 STRIPING DETAIL

Scale: 3/32" = 1'-0"

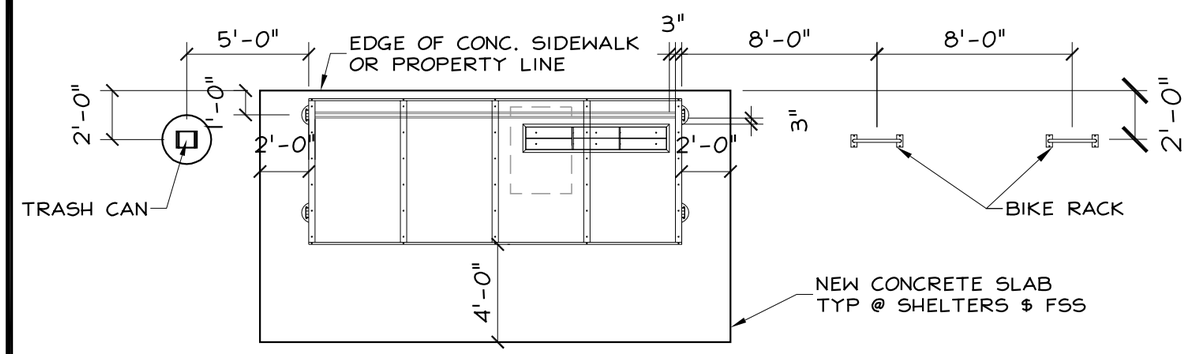

NOTES:
- DIMENSIONS ARE TO CENTER OF OBJECT
- TYPICAL LAYOUT UNLESS NOTED OTHERWISE AT BUS STOP LOCATIONS

3 / 29 TYPICAL SHELTER LAYOUT

NOT TO SCALE

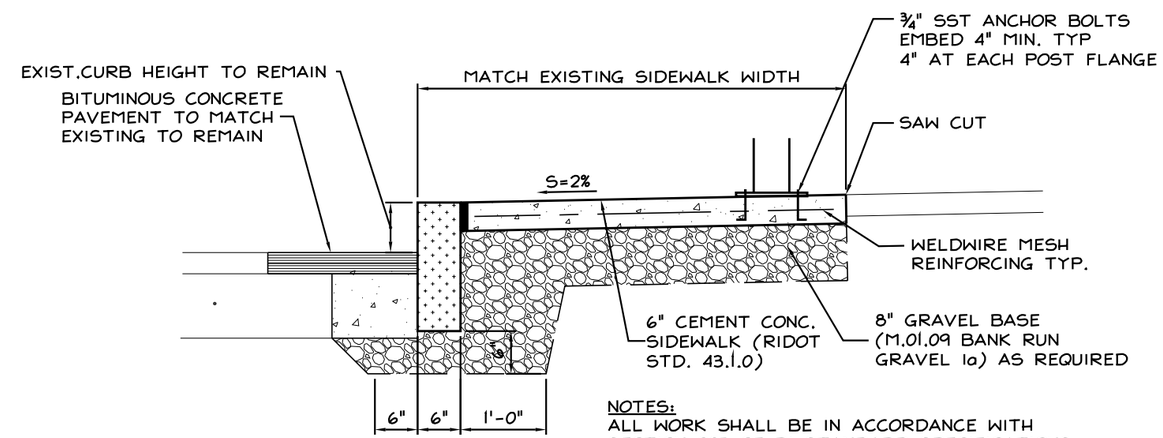

NOTES:
ALL WORK SHALL BE IN ACCORDANCE WITH SECTION 905 OF RI STANDARD SPECIFICATIONS FOR ROAD & BRIDGE CONSTRUCTION.

2 / 29 CONCRETE SIDEWALK W/ANCHOR DETAIL

NOT TO SCALE

50 Holden Street
Providence, Rhode Island 02908

Phone: (401) 272-1730
Fax: (401) 273-7156

E-mail: rgbinfo@rgb.net
www.rgb.net

RGB
Architecture · Engineering · Interior Design

Project
RIPTA R - LINE STATIONS
BROAD - NORTH MAIN

RIPTA
RHODE ISLAND PUBLIC TRANSIT AUTHORITY

PROVIDENCE / PAWTUCKET, RI

Contents
DETAILS

Project No.	6060	Drawing No.	**29**
Checked by	JRR		
Issued	FEB 10, 2014	Sheet	27 of 28

GENERAL NOTES:

1. ALL CONCRETE FOOTINGS SHALL CONTAIN AN APPROVED AIR ENTRAINING ADMIXTURE AND SHALL HAVE A COMPRESSIVE STRENGTH OF NOT LESS THAN 4000 PSI. AIR CONTENT SHALL BE 4½% - 7%.
2. ALL REINFORCING BARS SHALL BE ASTM A-615 GRADE 60.
3. COMPACT SUBGRADE TO MIN 95% MAXIMUM DRY DENSITY BEFORE FOOTINGS ARE CONSTRUCTED.
4. STRUCTURE SHALL BE PLACES AT CENTER OF REQUIRED FOOTING.
5. ALL CONCRETE FOOTINGS SHALL BE NEW CONCRETE UNLESS OTHERWISE NOTED. REFER TO SCHEDULE BELOW FOR ADDITIONAL FOOTING CRITERIA.
6. REMOVE AND DISPOSE OF EXISTING CONCRETE AND EXCAVATED SOIL WHERE NEW FOOTINGS ARE TO BE PLACED, TYPICAL.

FOOTING DIMENSIONS AND REINFORCING SCHEDULE

TYPE	FOOTING DIMENSIONS			REINFORCING		ANCHORS	NOTES
	L	B	H	C	D		
BIKE RACK	EXISTING CONCRETE SLAB			EXISTING		1/2" DIA X 2¼" EMBED HILTI HAS SS ROD W/ HILTI HIT-RE 500 EPOXY OR APPROVED EQUAL	A
BENCH	EXISTING CONCRETE SLAB			EXISTING		3/8" DIA X 1⅜" EMBED HILTI HAS SS ROD W/ HILTI HIT-RE 500 EPOXY OR APPROVED EQUAL	A
WAY FINDING TOTEM 9'-10" +/-	4'-0"	4'-0"	8"	#4 @ 12" OC	#4 @ 12" OC	1/2" DIA X 4 1/2" EMBED HILTI HAS SS ROD W/ HILTI HIT-RE 500 EPOXY OR APPROVED EQUAL	
WAY FINDING TOTEM 15'-3" +/-	5'-6"	5'-6"	8"	#5 @ 9" OC	#5 @ 9" OC	1/2" DIA X 4 1/2" EMBED HILTI HAS SS ROD W/ HILTI HIT-RE 500 EPOXY OR APPROVED EQUAL	
WINDSCREEN	4'-0"	13'-0"	8"	#6 @ 12" OC	#4 @ 12" OC	1/2" DIA X 4 1/2" EMBED HILTI HAS SS ROD W/ HILTI HIT-RE 500 EPOXY OR APPROVED EQUAL	
ENHANCED TRANSIT SIGN	3'-0"	3'-0"	8"	#4 @ 12" OC	#4 @ 12" OC	1/2" DIA X 4 1/2" EMBED HILTI HAS SS ROD W/ HILTI HIT-RE 500 EPOXY OR APPROVED EQUAL	
TRASH CAN	EXISTING CONCRETE SLAB			EXISTING		1/2" DIA X 2 1/4" EMBED HILTI HAS SS ROD W/ HILTI HIT-RE 500 EPOXY OR APPROVED EQUAL	
TICKET VENDING MACHINE	EXISTING CONCRETE SLAB			EXISTING		1/2" DIA X 2 1/4" EMBED HILTI HAS SS ROD W/ HILTI HIT-RE 500 EPOXY OR APPROVED EQUAL	A
SHELTER - CANTILEVER	4'-0"	17'-0"	8"	#6 @ 10" OC	#4 @ 12" OC	1/2" DIA X 4 1/2" EMBED HILTI HAS SS ROD W/ HILTI HIT-RE 500 EPOXY OR APPROVED EQUAL	
SHELTER - LARGE CANTILEVER	4'-0"	21'-0"	8"	#7 @ 12" OC	#4 @ 12" OC	1/2" DIA X 4 1/2" EMBED HILTI HAS SS ROD W/ HILTI HIT-RE 500 EPOXY OR APPROVED EQUAL	
SHELTER - 4-POST	5'-6"	17'-0"	8"	#6 @ 10" OC	#4 @ 12" OC	1/2" DIA X 4 1/2" EMBED HILTI HAS SS ROD W/ HILTI HIT-RE 500 EPOXY OR APPROVED EQUAL	
SHELTER - LARGE 4-POST	5'-6"	21'-0"	8"	#7 @ 12" OC	#4 @ 12" OC	1/2" DIA X 4 1/2" EMBED HILTI HAS SS ROD W/ HILTI HIT-RE 500 EPOXY OR APPROVED EQUAL	

NOTES:

A. WHEN BENCH AND TICKET VENDING MACHINE ARE LOCATED INSIDE SHELTER, ATTACH PER ANCHOR BOLT REQUIREMENTS. OTHERWISE ATTACH BENCH, TICKET VENDING MACHINE, AND BIKE RACK DIRECTLY TO EXISTING SIDEWALK. BENCH OR BIKE RACK SHALL NOT BE PLACED WITHIN 12" OF EDGE OF EXISTING SIDEWALK

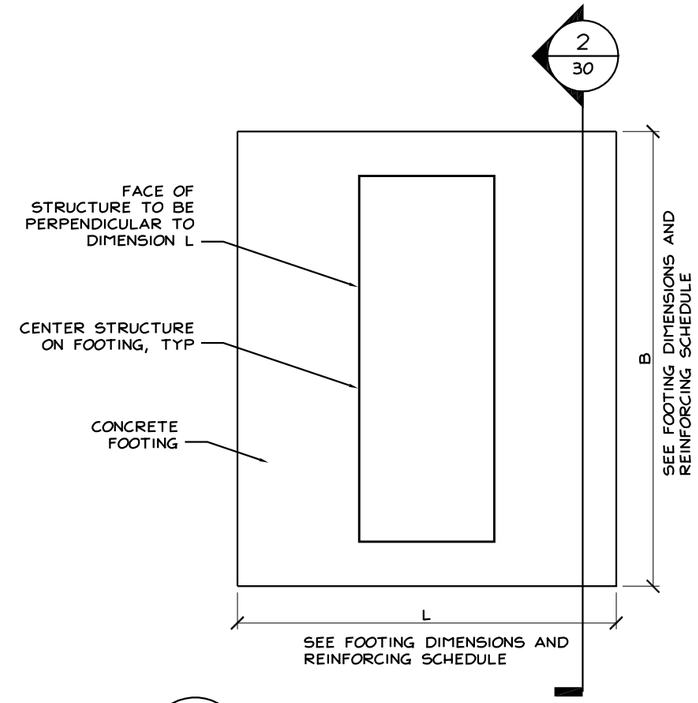

1 / 30 TYPICAL FOOTING PLAN

Scale: NOT TO SCALE

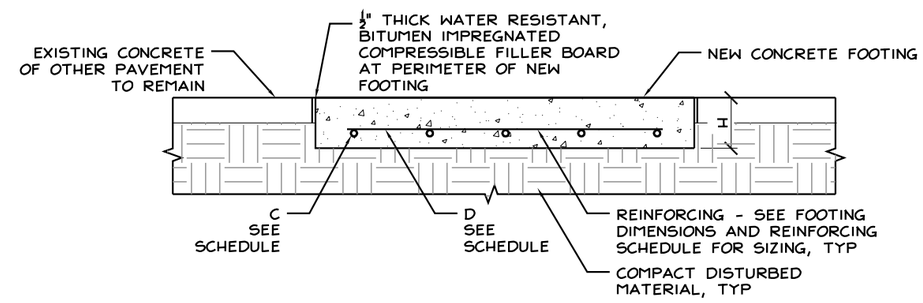

2 / 30 FOOTING SECTION DETAIL

Scale: NOT TO SCALE

50 Holden Street
Providence, Rhode Island 02908

Phone: (401) 272-1730
Fax: (401) 273-7156

E-mail: rgbinfo@rgb.net
www.rgb.net

RGB

Architecture · Engineering · Interior Design

Project
RIPTA R - LINE STATIONS
BROAD - NORTH MAIN

RIPTA
RHODE ISLAND PUBLIC TRANSIT AUTHORITY

PROVIDENCE / PAWTUCKET, RI

Contents
FOOTING DETAILS

Project No. 6060	Drawing No. **30**
Checked by JRR	
Issued FEB 10, 2014	Sheet 28 of 28