Rhode Island Airport Corporation

April 17, 2014

ADDENDUM NO. 002
INVITATION FOR BID NO. 24873
RUNWAY 16-34 IMPROVEMENT PROGRAM
PHASE #2 - RUNWAY 34 END SAFETY AREA, NAVAID IMPROVEMENTS, AND WETLAND MITIGATION
T. F. GREEN AIRPORT

Prospective Bidders and all concerned are hereby notified of the following changes in the Invitation for Bid document for the Runway 16-34 Improvement Program, Phase #2 – Runway 34 End Safety Area, NAVAID Improvements and Wetlands Mitigation, T. F. Green Airport IFB No. 24873. These changes shall be incorporated in and shall become an integral part of the contract documents.

Addendum Item No. 002

- Potential bidders are granted a one day extension of the deadline from April 21, 2014 to April 22, 2014.
  Bid Opening will be held on April 22, 2014 at 10:00AM, T.F. Green Airport Terminal, Warwick Room, 2000 Post Road, 3rd Floor, Warwick, RI.

- Attached are the responses to the questions that were submitted by deadline date identified in the Invitation for Bid No. 24873.

Jeffrey P. Goulart
Purchasing Agent

ADDENDUM NO 2.

Bidding and Contract Documents

For

CONSTRUCTION CONTRACT NO. 24873

RUNWAY 16-34 IMPROVEMENT PROGRAM
PHASE #2 - RUNWAY 34 END SAFETY AREA, NAVAID IMPROVEMENTS, AND WETLAND MITIGATION
T.F. Green Airport
Warwick, Rhode Island

RHODE ISLAND AIRPORT CORPORATION

April 16, 2014

PREPARED BY:

AECOM Technical Services, Inc.
10 Orms Street, Suite 405
Providence, Rhode Island 02904

McFarland-Johnson, Inc.
53 Regional Drive
Concord, New Hampshire 03301

JACOBS
166 Valley Street, Building 6M. Suite 101
Providence, Rhode Island 02909

Vanasse Hangen Brustlin, Inc.
101 Walnut Street
Watertown, Massachusetts 02471

NOTICE TO PROSPECTIVE BIDDERS

ADDENDUM NO. 2

Prospective Bidders and all concerned are hereby notified of the following changes in the Contract Documents for RUNWAY 16-34 IMPROVEMENT PROGRAM PHASE #2 - RUNWAY 34 END SAFETY AREA, NAVAID IMPROVEMENTS, AND WETLAND MITIGATION. These changes shall be incorporated in and shall become an integral part of the contract documents. The number (No. 2) and date (4/16/14) of this addendum must be entered into the space provided on Page 1 of 51 of the Bid Form. These changes will be incorporated into the Conformed Contract Documents to be issued to the successful bidder.

CONTRACTOR'S QUESTIONS

During the bidding phase of this project, items needing clarification have been submitted in writing. The following question, along with a response, is provided as clarification.

Q2. *Item #152.3 – Foreign Borrow; please provide the 'Gradation Requirements' of this material that will meet the approval of the engineer.*

A2. Foreign Borrow fill material shall conform the Common Borrow material using RIDOT specifications (Material M.01.01) for the top 6 feet of the subgrade embankment. This specification states the material should be gravelly in nature with the following minimum test requirements: Boulders (retained on a 3-inch sieve) up to 9 inches in diameter. The material shall also contain not more than 17 percent by weight passing the No. 200 sieve. For below the top 6 feet of subgrade embankment and fill, the maximum boulder size can be increase to 12 inches in diameter, but still contain not more than 17 percent by weight passing the No. 200 sieve.

Q3. *Item #2 – Radios; during the Pre-Bid Meeting, it was stated that radios would not be needed. Please clarify.*

A3. The contractor will not be required to have radio contact with the ATCT.

Q4. *Item #152.2 , 202-1, 203-1, 203-2, 202-3, 202-6, 202-8 – Unclassified Excavations & Structural Excavations; some borings were taken in the areas of these excavations, but has gradations been performed on the material? Also, can this material be used for embankment in the sheeted excavation area? If not, does the material get stockpiled on-site or does it have to be disposed of off-site?*

A4. Refer to Geotechnical Report prepared by GZA and Dated 6/7/2013 included as part of this Addendum for gradation of materials sampled at borings and test pits taken for Mitigation Site 2. For Mitigation Sites 1, 3, 14 & 15 gradation information is not available. If the Contractor wants to re-use existing materials then they should perform material testing as approved by the Engineer to confirm suitability of the material reuse.

Q5. *The organic material in the new wetland mitigation areas (Site 1) and in the existing wetland areas (Site 2, 3, 14, 15) being excavated; does the material contain invasive species and deemed not re-usable?*

A5. Wetland humus or organic soil material excavated in Site 3 would be suitable for reuse in Site 3. Little organic soil volume is expected to be generated or required for planting at Site 2.

Large parts of Sites 1, 14, and 15 host invasive species populations and would not be suitable for reuse without treatment. Sites 1 and 14 call for the use of a High Organic Coarse Textured Soil as topsoil. The gradation and organic content requirements for this soil are found in SECTION L01.9903 HIGH ORGANIC COARSE-TEXTURE SOIL FOR WETLAND MITIGATION AREAS (12" DEEP). The "topsoil" present in these mitigation areas, even if uninfected by invasive species, would not meet the requirements for this soil specification without substantial amendment. Attention is called to SECTION SP-08 CONTROL OF

INVASIVE PLANTS EXISTING ON SITE which requires the contractor to develop a management plan for invasive species for the mitigation areas.

Q6. *Volume II, Sheet #38 & 39 show Test Pits #1 thru #4, but I do not see the information from the test pits in the Contract documents for these test pits.*

A6. Refer to Geotechnical Report prepared by GZA and Dated 6/7/2013 included as part of Addendum 2 for gradation of materials sampled at borings and test pits taken for Mitigation Site 2.

Q7. *For contractor clarification, please list the items that RIAC will be procuring for contractor installation.*

A7. RIAC will be procuring the EMAS material for contractor installation. In addition, RIAC will also be procuring the ALCMS modification materials for contractor installation as outlined in Specification L-109.

Q8. *Sheet 80 of 129, Note 7, states that the excavation support and protection system is to be constructed in accordance with the design and special provisions. Is the support system shown in the contract documents fully and completely designed? If so who is the designer of record and confirm that no other submissions by the contractor will be required.*

A8. Yes the wall system is fully designed. AECOM is the designer of record. The contractor is to submit structural steel shop drawings – shapes, welds, etc. – for review & approval prior to ordering material. The contractor's professional engineer is to certify, sign and seal that the shoring has been installed in accordance with the design drawings prior to beginning work within the shored area. Also to be submitted are the results of the borings taken at the proposed sheetpile wall, as stated in Specification X-106. Based on these borings, the sheetpile sizes, embedment depths and bracing details may require revisions.

Q9. *Sheet 80 of 129, Note 10, please clarify and provide direction what the contractor is required to submit should "significant or minor changes" be made to the shoring system.*

A9. The contractor is to submit any changes he proposes to make to the shoring system.

Q10. *Sheet 80 of 129, Note 12, states larger member sizes may be substituted in the field without engineer approval. Does this conflict with Note number 7. Please clarify.*

A10. No, the intent of this note is that if, for example, a required sheet pile shape is unavailable (ex. long lead time), the contractor may use a larger shape if it is more readily available.

Q11. *We request that the Geotechnical Report as mentioned in Specification Section 01-4533 Paragraph 1.4E be provided to the contractor. Is this report available?*

A11. Yes, the referenced Geotechnical report has been included as part of this Addendum 2.

Q12. *Under what bid item does the 15" RCP pipe shown between DMH 1043 and CB 1061 and between CB1061 and CB 1505 (sheet 33 of 129) get paid under?*

A12. A bid item (D-701.10 Reinforced Concrete Pipe, 15") is added to Addendum 2.

Q13. *Please clarify the basis of payment for item 212-1? Should there be a write in allowance for these items to be used to bill against for any force account repair work required?*

A13. Basis of Payment has been revised to an allowance, refer to revised Specification 212 and Schedule of Prices.

Q14. *Please clarify the allowance amount for bid item L108-5.1. On page L-108-10 it is shown as $6000.00 and on sheet L-108-11 it is shown as $5000.00.*

A14. The proper allowance amount is $5,000. Refer to revised specification.

Q15. *Regarding Item P-152.1 – Please confirm that muck excavation shall be removed and disposed of on-site and is to remain property of the owner in accordance with plan sheet 28 of 129 (volume 1).*

A15. Muck Excavation will be disposed on site as designated on the plans.

Q16. *Please provide a detail and a specification for item D-701.8 - REINFORCED CONCRETE PIPE, 36", SLEEVED.*

A16. The 36" sleeved RCP will be replaced with a 36" DIP.

Q17. *Section 701-2; installation and Inspection of Water Facilities – Warwick Water Department – Overtime Work per Allowance. Please provide an amount for the Allowance.*

A17. Contractors shall use an Allowance of $4,000 for this item.

Q18. *Section 701.9901, page 7 of 16, Book 2 of 2 of the Specifications states that tapping sleeves will be used as indicated on the plans, the Site 2 General and Culvert Plan does not show tapping sleeves. Please advise.*

A18. Tapping sleeves will not be required. The new waterline shall be attached using appropriate fittings directly to the existing gate valves located in Lake Shore Drive within the Project Limits

Q19. *Volume 1 of Plans, page 14 of 129, Runway 34 and NAVID Improvements Phase A Plan, Construction Notes States; Work in Sub phase 3A includes: Install sheet piling once Wetland Sites 1 and 14 have established temporary stabilization. What is the definition of temporary stabilization? What would be the time frame for this?*

A19. Temporary soil stabilization may be achieved through establishment of temporary or permanent vegetative cover. The shrubs listed in the landscape plans do not have to be planted in order for the site to be stabilized. The site may be stabilized prior to the establishment of vegetation if the seeded areas are protected in a method consistent with RIDOT Standard Section L.05 (Seed Stabilizers) except that for Subsection L.05.03.4 Adhesive Mulch Stabilizer must be limited to the uses of chemical bonding agents in products referred to as bonded fiber matrices. The time

frame limitation for this work is that it must be complete before sheet piling work displaces floodplain storage.

Q20. *Per our conversation today, my client has 2 upcoming bids for RIAC – 1 on the 14th for Winslow Park and one that is on the 21st for Runway Improvements. Both of the bid bond forms provided call for Resident Countersignatures; however, per our discussion we do not need to have the bid bonds countersigned. Please confirm.*

A20. "Countersignatures" are not required.

Q21. *Erosion control for runway improvements is shown on plan sheet 33 and 34 in Vol. 1. Are the wattles shown on these plans to be installed in phase A1?*

A21. Yes

Q22. *Plan sheet 14 Vol. 1 has a note under phase A3 that states to remove erosion control. Are all erosion control installed under phase A1 to be removed?*

A22. Once areas are stabilized temporary erosion controls shall be removed.

Q23. *Erosion control for runway improvements is shown of plan sheet 33 and 34 in Vol. 1. Are the wattles shown of theses plans to be installed in phase B1?*

A23. Erosion control measures will be installed when required.

Q24. *Bid item #42 Temporary fence – 8ft. Barrier and fence, where is this item to be installed?*

A24. For location and alignment of Temporary AOA Security Fence, see sheet G014

Q25. *Please provide details for the precast wing walls and footings for the box culvert at site #2.*

A25. As per Plans and Specification 809, Section 809.02.1 (b) and (c) – The Contractor is responsible for the design and shop drawing preparation for the box culvert and wingwalls, including footings using design criteria as indicated on the Plans.

Q26. *Plan sheet 26 of Vol. 1 has a note to install sheeting prior to muck excavation. Does all the sheeting have to be installed before excavation of peat?*

A26. Yes, install sheet piling prior to muck excavation.

Q27. *Drainage plan #33 of Vol. 1 show 15" RCP. There is not a bid item for 15" RCP. Please add this item.*

A27. A bid item (D-701.10 Reinforced Concrete Pipe, 15") is included in Addendum 2.

Q28. *Is the removal of the existing sewer line paid under bid item#54 Pipe Removal?*

A28. The existing sewer shall be filled and abandoned in place. It is paid under Item X-108.2 CLSM

Pipe Fill.

Q29. *Does the existing sewer line need to be temporary by-passes during installation of the new sewer line? If it does how is it paid for? Also if it does please provide flow rates of the existing line for by-pass pumping.*

A29. The existing sewer must be functional at all times. Contractor shall decide best method maintaining or by passing flow. No separate payment will be made for any temporary facilities, Flow rates are unknown.

Q30. *Plan sheet 40 Vol. 1 has a detail for sewer force main connection, the detail show a tapping sleeve and valve to be used to connect to the existing force main. A tapping sleeve and valve will not prevent the flow of sewer from continuing thru the existing pipe. Please provide details on what is required?*

A30. A tapping sleeve and valve will prevent the flow of sewer from continuing through the existing pipe.

Q31. *Please provide detail for the 36" sleeved RCP.*

A31. The 36" sleeved RCP will be replaced with a 36" DIP.

Q32. *Plan sheet 38 of Vol.1 has a detail for concrete headwall. Please provide more information on the side walls, length and height of wall.*

A32. Use RIDOT standard concrete headwall for 36" pipe.

Q33. *Plan sheet 82 of Vol.1 note #1, states to use bracing if more than 6" deflection, see spec. section X-106. Spec. section X-106 does not address this. How (who?) is monitoring the sheeting? If it is the contractor please provide details of what is required.*

A33. The corrected version of Spec X-106 provides this information; see Section 106-4.1.

Q34. *Plan sheet 82 of Vol.1 show a plan view with the sheet pile wall bracing on the outside of the wall where PZC-B 69 sheeting is installed is this required to be installed?*

A34. The "Bracing Strut Plan" shows the bracing system on the inside of the sheet pile wall; i.e., within the excavation. The "Sheet Pile Transition Detail" is showing where the sheeting "shapes" transition from one to another, and no bracing is shown.

Q35. *Plan sheet 82 of Vol.1 plan view the sheet pile wall bracing is on the outside of the wall, on the same plan details show's it on the inside, please clarify which is correct.*

A35. All bracing is to be installed within the excavation; see response to #34 above.

Q36. *What flows are we responsible to bypass for sites 2, 3 and 15?*
a. This item requires a PE Design and we need to know flow rate for bypass pump sizing.

A36. It is the contractor's responsibility to develop and implement a dewatering plan that allows for the proposed work to be performed in accordance with the plans and specifications. The contractor must decide what hydrologic events need to be controlled and by what means and methods in order to construct the project as specified. It is designer's responsibility to weigh in on the viability of the contractor's water control plan once he/she has submitted it for review. Attached is supplemental information of the flow data from the wetland application.

Q37. *What is the area for invasive species control in SY?*
a. We need to know this since site work and soil/ debris removal and disposal is incidental to this item. There is no way to bid this item as a Lump Sum. This material will most likely need to go to a landfill.
b. Can this material stay onsite somewhere?

A37. No soil material may be removed from Airport for disposal and all soil material must be disposed of on the Airport in designated stockpile areas. The area in SY is not known but includes the entire area of Site 14 that is in shrub cover, more than half the area of Site 1, and some slopes in Site 15. The contractor must develop a plan to manage invasive species at the mitigation sites. For Sites 1, 14, and 15 this may involve the use of herbicides, screening to physically separate invasive species rootstock followed by processing, on-site deep burial of infected soils beneath uninfected soil material or some combination of these or other acceptable methods the contractor may propose. Fewer invasive species are present in Site 3 and spot control (pulling or herbicide application) is anticipated.

Q38. *Is the concrete base on the runway reinforced? If so please provide details.*

A38. The existing 10" thick concrete pavement under the asphalt pavement on the RW 34 End is reinforced based on record information. The record information indicates the concrete panels have expansion joints (i.e. expansion joint filler with #8 smooth dowels at 12" on-center transversely) at 180-foot longitudinal spacing with contraction joints (i.e. #8 smooth dowels with expansion caps @ 12" on-center transversely) at 60-foot longitudinal spacing and "dummy" joints (i.e. sawn only transversely) at 20-foot longitudinal spacing. The panel width transversely appears to be 12.5 feet. Based on record information, the reinforcing is #612-04 welded wire fabric (i.e. #0 wire @ 6" on-center longitudinally and #4 wire @ 12" on-center transversely) placed at approximately 3.5" from the top surface for each 180-foot length between expansion joints, but only within a single panel width.

Q39. *Item #74, X-107.1, Groundwater Detention System; what is the spacing (number of penetrations for grouting) and lengths of the 24" RCP pipe connecting the Precast Bridge Unit rows together?*

A39. Will be in accordance with manufacturers requirements.

Q40. *In lieu of the 24" RCP pipe within the Groundwater Detention System, will you accept a 24" Corlix corrugated aluminum pipe or equal? Request being made since all the bells of the RCP would have to be cut off to allow the pipe to sit level on the concrete slabs of the Groundwater Detention System adding additional labor & handling. (See attached Corlix Aluminum Pipe information)*

A40. Aluminum pipe will not be accepted.

Q41. *What Item Number is the 24" RCP pipe between the Precast Bridge Units being paid under?*

A41. No separate payment will be made.

Q42. *What diameter is the sleeve on the 36" RCP pipe and what type pipe is specified?*

A42. The 36" sleeved RCP will be replaced with a 36" DIP.

Q43. *On Sheet 36, Volume 1, Groundwater Detention System details are provided and noted 'Not to Scale'. Section A-A & Section B-B which are sections from the 'Plan View' at the outfall are missing various dimensions (height, width, what happens at the top) and details to figure the work. Section A-A also shows a 5" diameter outlet behind the 2'x2'x2" trash rack, please give more detail. The trash rack as shown doesn't seem to work.*

A43. The trash rack is 2'x2'x2'.

Q44. *Groundwater Detention System; please provide details of the Access Manholes and frame & cover specification.*

A44. Will be in accordance with manufacturers requirements

Q45. *Sheet 38, Volume 1; please provide more dimensions for the wingwalls of the concrete headwall at Relocated Outfall #006A.*

A45. Use RIDOT standard concrete headwall for 36" pipe.

Q46. *The 10" ductile iron sewer pipe noted to be removed; does it get paid for under Item #54, D-701.9, Pipe Removal?*

A46. The existing sewer shall be filled and abandoned in place. It is paid under Item X-108..2 CLSM Pipe Fill.

Q47. *Item #76, X-108.2, CLSM Pipe Fill; what diameter is the pipe?*

A47. 10 inches

Q48. *Item #77, X-108.3, Sewer Structure Removal; please indicate where these 2 structures are on the drawings to be removed.*

A48. There is only one structure to remove.

Q49. *Item #20, P-156.6, Timber Mat; please state the size of the timber mat required.*

A49. Item #20, P-156.6, Timber Mat will be removed from the bid items. Item is incidental to construction.

Q50. *Can the bid opening time be moved to 2:00 PM on 4/21/14 since Monday is the day following a holiday weekend?*

A50. The bid date is moved to April 22, 2014. The opening time will not change.

Q51. *Bid items 212-1 & 212-2 Cleaning and maintenance of erosion controls, Spec. section 212 page 5 Basis of payment states that this will be paid by force account. Please make this bid item an allowance.*

A51. Basis of Payment has been revised to an allowance, refer to revised Specification 212 and Schedule of Prices.

Q52. *Please provide detail of the PVC Manholes at Site 1.*

A52. PVC Underdrain system including all associated work items have been removed from the Contract. Refer to applicable revised drawings included as part of this Addendum.

Q53. *Please provide the location for the engineer's field office.*

A53. It will be located in the staging area

Q54. *Please provide a specification on what type of material is to be used for the Foreign Borrow, Bid Item P-152.3.*

A54. Foreign Borrow fill material shall conform the Common Borrow material using RIDOT specifications (Material M.01.01) for the top 6 feet of the subgrade embankment. This specification states the material should be gravelly in nature with the following minimum test requirements: Boulders (retained on a 3-inch sieve) up to 9 inches in diameter. The material shall also contain not more than 17 percent by weight passing the No. 200 sieve. For below the top 6 feet of subgrade embankment and fill, the maximum boulder size can be increase to 12 inches in diameter, but still contain not more than 17 percent by weight passing the No. 200 sieve.

Q55. *Please provide a detail for the Rock Filter Berm, Bid Item #P-156.7.*

A55. The rock filter berm has been removed.

Q56. *Site 3 Plan #41 of Vol.2 has a new riprap channel to be installed. Please add a pay item for this work.*

A56. New Pay Items 920-4, 920-5 and 920-6 have been added, refer to Revised Section 920 and Schedule of Prices.

Q57. *Site 3 Bid Item #202-5 Gravel Borrow, there is no gravel borrow work shown on the drawings, where is the gravel borrow required?*

A57. This item is to be used as a subgrade to the 12-inch Cobble-Gravel-Sand streambed layer if unsuitable substrate has to be over excavated before the streambed layer is installed.

Q58. *Item 12: Volume 2 Unit of Measure is SY on Bid Form and CY in Specs?*

A58. SY is the correct unit of measure.

Q59. *Item 13: Volume 2 Bid form is a Wetland Seed Mix L02-1 but L02-1 is the Aviation Seed Mix per specs. Should this be L02-5? Please verify the application rate of 80 lbs/ acre (typical application rate is 18 lbs/ acre)*

A59. Add new Pay Item L02-8 under Specification L02 SEEDING for Wetland Seed Mix (Type 5) – Site 1. The quantity of 12,000 SY for Item 13 is correct.

Q60. *Item 15: Volume 2 Verify quantity of 2.91 acres. This appears to include the new wetland area of 12,000 SY. The specs say re-fertilization of this area is NOT required.*

A60. Revised Quantity for Item 15 is 0.25 Acre

Q61. *Item 71: Volume 2 Onsite Wetland Fill. Where is this item in the specs? Is this an excavation item or an embankment fill/borrow item?*

A61. Refer to Revised Section 202 Specification which is part of this addendum. This existing onsite material that is to be used to fill the abandon stream channel as the new channel is being constructed.

Q62. *Item 74: Volume 2 Temp Stream Diversion- What are the anticipated flows the contractor is responsible for in designing and constructing the diversion system?*

A62. It is the contractor's responsibility to develop and implement a dewatering plan that allows for the proposed work to be performed in accordance with the plans and specifications. The contractor must decide what hydrologic events need to be controlled and by what means and methods in order to construct the project as specified. It is designer's responsibility to weigh in on the viability of the contractor's water control plan once he/she has submitted it for review.

Q63. *Item 82: Volume 2 Same as Item 15, verify area of 2.58 acres.*

A63. Revised Quantity for Item 82 is 0.22 Acre

Q64. *Item 102: Volume 2 Verify quantity (seems high). 2900 CY should cover 1.8 Acres. Site 14 appears to be approx. 0.6 Acres.*

A64. The unit of measure should be SY and not CY as indicated on Schedule of Prices. The quantity is correct.

Q65. *Can an Item be added to the bid for the full time flagperson required at the Tower Parking Lot entrance/exit?*

A65. No separate payment will be made for the full time flag person. The flag person is considered incidental to Item 001-4.1 MOBILIZATION/DEMOBILIZATION.

Q66. *The precast box culvert at the road crossing at Lake Shore Road; can the Contech O Series precast concrete culvert be considered as an Approved Alternate to the box culvert specified? The Contech system (information attached) can give the same hydraulic opening and meet the grading of the Low Flow Channel elevations. The culvert can be erected in phases too. Please advise!*

A66. Based on the layer of peat underlining the culvert location it has been deemed that a strip footing would impose loadings that would compress the peat and could result in significant settlement issues in the long term. Therefore the Contractor must utilize the precast box culvert configuration as per the plans.

Q67. *Bid Item #202-4 Onsite wetland fill, I can't find a specification for this work, please provide what is required to be done to the existing soil before placement.*

A67. Refer to Revised Section 202 Specification which is part of this addendum. This existing onsite material that is to be used to fill the abandon stream channel as the new channel is being constructed.

Q68. *In Site 3 in the area where the existing 24" sewer main is located the cross sections for Site 3(pages 47-51 Vol. 1) do not indicate any new material to be placed. The typical sections (pages 55-56, Vol. 1) indicate 12"Wetland soil under Zone 2 & 3, is this also in the area over the 24" sewer main. Is there any Wetland soil or 12" Organic Course Texture Soil to be placed in this area?*

A68. The finished grade for all cut and fill areas as indicated in the cross sections for site 3 shall be accomplished by placing 12-inches of native wetland soil excavated from the new stream channel or high organic coarse textured soil as specified, except for the perimeter road with the sewer force main and the access to the relocated concrete block fish grate structure. These equipment access routes will have the in-situ soil (exposed after excavation to finish grade) prepared as a seed bed, seeded and protected as shown on the plans.

Q69. *In Site 3 in the area where the existing path is to be removed the cross sections for Site 3(pages 47-51 Vol. 1) do not indicate any new material to be placed. The typical sections(pages 55-56, Vol. 1) indicate 12"Wetland soil under Zone 2 & 3, is this also in the area that the existing path that is being removed? Is there any Wetland soil or 12" Organic Course Texture Soil to be placed in this area?*

A69. Please refer to the Question 68 response.

PROJECT MANUAL

DIVISION 00 – BIDDING REQUIREMENTS AND CONTRACT DOCUMENTS

<u>ADDENDUM ITEM NO. 1:</u>

MODIFY Section 00 0010 Advertisement for Bid, Page 1 of 4, First Paragraph

REMOVE

Sealed bids will be received by the Rhode Island Airport Corporation (RIAC) (the Owner) at ***T. F. Green State Airport, 2000 Post Road, Warwick, RI 02886*** until 10:00 AM, Local Time, April 21, 2014 at which time and place all bids will be publicly opened and read for the following project:

REPLACE

Sealed bids will be received by the Rhode Island Airport Corporation (RIAC) (the Owner) at ***T. F. Green State Airport, 2000 Post Road, Warwick, RI 02886*** until 10:00 AM, Local Time, April 22, 2014 at which time and place all bids will be publicly opened and read for the following project:

Clarification Note: Bid Date has been extended by one day to April 22, 2014 at 10::00 AM.

ADDENDUM ITEM NO. 2:

DELETE Section 00 0320 Bid Form, Pages 1 thru 51 of 51 **AND**

REPLACE Section 00 0320 Bid Form, Pages 1 thru 51 – Addendum No.2 dated April 16, 2014.

Clarification Note: Primary modifications were quantity revisions and units of measurements

DIVISION 02A – TECHNICAL SPECIFICATIONS – VOLUME I

ADDENDUM ITEM NO. 3:

DELETE Entire Section P-152 Excavation and Embankment dated March 2014 **AND**

REPLACE Entire Section P-152 Excavation and Embankment – Addendum No.2 dated April 16, 2014.

Clarification Note: Modifications were related to the addition of 152-1.2d Foreign Borrow

ADDENDUM ITEM NO. 4:

DELETE Entire Section P-156 Temporary Pollution Control dated March 2014 **AND**

REPLACE Entire Section P-156 Temporary Pollution Control – Addendum No.2 dated April 16, 2014.

Clarification Note: Modifications were related to the removal of Item P-156.6, Timber Mat.

ADDENDUM ITEM NO. 5:

DELETE Entire Section D-701 Pipe for Storm Drains & Culverts dated March 2014 **AND**

REPLACE Entire Section D-701 Pipe for Storm Drains & Culverts – Addendum No.2 dated April 16, 2014.

Clarification Note: Modifications were related to the revision of Item No. 53 D-701.9 from RCP to DIP and the addition of Item 55A D-701.10 Reinforced Concrete Pipe – 15-Inch.

ADDENDUM ITEM NO. 6:

DELETE Entire Section M-004 Sand Filters dated March 2014 **AND**

REPLACE Entire Section M-004 Sand Filters – Addendum No.2 dated April 16, 2014.

Clarification Note: Modifications were related to Section 004-2.4 Topsoil Cover.

ADDENDUM ITEM NO. 7:

DELETE Entire Section X-106 Sheet Piling dated May 2013 **AND**

REPLACE Entire Section X-106 Sheet Piling – Addendum No.2 dated April 16, 2014.

ADDENDUM ITEM NO. 8:

DELETE Entire Section X-108 Force Main Pipe dated May 2013 **AND**

REPLACE Entire Section X-108 Force Main Pipe– Addendum No.2 dated April 16, 2014.

ADDENDUM ITEM NO. 9:

DELETE Entire Section L-100 Lighting and Electrical Work dated February 2014 **AND**

REPLACE Entire Section L-100 Lighting and Electrical Work – Addendum No.2 dated April 16, 2014.

ADDENDUM ITEM NO. 10:

DELETE Entire Section L-108 Underground Power Cable for Airports dated February 2014 **AND**

REPLACE Entire Section L-108 Underground Power Cable for Airports – Addendum No.2 dated April 16, 2014.

ADDENDUM ITEM NO. 11:

DELETE Entire Section L-109 Installation of Airport Vault Equipment dated February 2014 **AND**

REPLACE Entire Section L-109 Installation of Airport Vault Equipment – Addendum No.2 dated April 16, 2014.

ADDENDUM ITEM NO. 12:

DELETE Entire Section L-110 Airport Underground Electrical Duct Banks and Conduits dated February 2014 **AND**

REPLACE Entire Section L-110 Airport Underground Electrical Duct Banks and Conduits – Addendum No.2 dated April 16, 2014.

ADDENDUM ITEM NO. 13:

DELETE Entire Section L-125 Installation of Airport Lighting Systems dated February 2014 **AND**

REPLACE Entire Section L-125 Installation of Airport Lighting Systems – Addendum No.2 dated April 16, 2014.

ADDENDUM ITEM NO. 14:

DELETE Entire Section L-127 Precision Approach Path Indicators (PAPI) dated February 2014 **AND**

REPLACE Entire Section L-127 Precision Approach Path Indicators (PAPI) – Addendum No.2 dated April 16, 2014.

ADDENDUM ITEM NO. 15:

DELETE Entire Section L-853 Retroreflective Edge Markers dated February 2014 **AND**

REPLACE Entire Section L-853 Retroreflective Edge Markers – Addendum No.2 dated April 16, 2014.

DIVISION 02B – TECHNICAL SPECIFICATIONS – VOLUME II

ADDENDUM ITEM NO. 16:

DELETE Entire Section 202 Excavation and Embankment dated March 2014 **AND**

REPLACE Entire Section 202 Excavation and Embankment and On-Site Wetlands Fill – Addendum No.2 dated April 16, 2014.

ADDENDUM ITEM NO. 17:

DELETE Entire Section 212 Maintenance and Cleaning of Erosion and Pollution Controls dated March 2014 **AND**

REPLACE Entire Section212 Maintenance and Cleaning of Erosion and Pollution Controls – Addendum No.2 dated April 16, 2014.

ADDENDUM ITEM NO. 18:

DELETE Entire Section 701 Installation and Inspection of Water Facilities – Warwick Water Department dated March 2014 **AND**

REPLACE Entire Section 701 Installation and Inspection of Water Facilities – Warwick Water Department Controls – Addendum No.2 dated April 16, 2014.

ADDENDUM ITEM NO. 19:

DELETE Entire Section 920 RipRap dated March 2014 **AND**

REPLACE Entire Section 920 RipRap – Addendum No.2 dated April 16, 2014.

ADDENDUM ITEM NO. 20:

DELETE Entire Section L02 Seeding dated March 2014 **AND**

REPLACE Entire Section L02 Seeding – Addendum No.2 dated April 16, 2014.

DIVISION 03D– RIDEM PERMITS

ADDENDUM ITEM NO. 21:

ADD Entire document entitled "Permit to Alter Freshwater Wetlands" dated April 16, 2014.

DIVISION 03E– U.S. ARMY CORPS OF ENGINEERS – SECTION 404 INDIVIDUAL PERMIT

ADDENDUM ITEM NO. 22:

DELETE Entire Section and all references.

CONTRACT DRAWINGS

ADDENDUM ITEM NO. 23:

DELETE From Volume 1 Sheet 3 – Drawing No. G003 entitled "Quantities – Volume I" dated March, 2014 **AND**

REPLACE Entire Volume 1 Sheet 3 – Drawing No. G003 entitled "Quantities – Volume I" with Addendum No.2 revision dated April 16, 2014.

ADDENDUM ITEM NO. 24:

DELETE From Volume 1 Sheet 24 – Drawing No. C102 entitled "Existing Conditions and Demolition Plan – Sheet 3" dated March, 2014 **AND**

REPLACE Entire Volume 1 Sheet 24 – Drawing No. C102 entitled "Existing Conditions and Demolition Plan – Sheet 3" with Addendum No.2 revision dated April 16, 2014.

ADDENDUM ITEM NO. 25:

DELETE From Volume 1 Sheet 34 – Drawing No. C401 entitled "Grading and Drainage Plan – Sheet 2" dated March, 2014 **AND**

REPLACE Entire Volume 1 Sheet 34 – Drawing No. C401 entitled "Grading and Drainage Plan – Sheet 2" with Addendum No.2 revision dated April 16, 2014.

ADDENDUM ITEM NO. 26:

DELETE From Volume 1 Sheet 35 – Drawing No. C402 entitled "Drainage Schedule" dated March, 2014 **AND**

REPLACE Entire Volume 1 Sheet 35 – Drawing No. C402 entitled "Drainage Schedule" with Addendum No.2 revision dated April 16, 2014.

ADDENDUM ITEM NO. 27:

DELETE From Volume 1 Sheet 36 – Drawing No. C403 entitled "Drainage Details – Sheet 1" dated March, 2014 **AND**

REPLACE Entire Volume 1 Sheet 36 – Drawing No. C403 entitled "Drainage Details – Sheet 1" with Addendum No.2 revision dated April 16, 2014.

ADDENDUM ITEM NO. 28:

DELETE From Volume 1 Sheet 78 – Drawing No. ES001 entitled "Erosion Control Notes" dated March, 2014 **AND**

REPLACE Entire Volume 1 Sheet 78 – Drawing No. ES001 entitled "Erosion Control Notes" with Addendum No.2 revision dated April 16, 2014.

ADDENDUM ITEM NO. 29:

DELETE From Volume 2 Sheet 9 entitled "Site 1 Grading and Geometry Plan" dated March, 2014 **AND**

REPLACE Entire Volume 2 Sheet 9 entitled "Site 1 Grading and Geometry Plan" with Revision #1 dated March 31, 2014.

Clarification Note: The under drain system proposed for Site was removed at RIDEM request.

ADDENDUM ITEM NO. 30:

DELETE From Volume 2 Sheet 10 entitled "Site 1 Cross Sections" dated March, 2014 **AND**

REPLACE Entire Volume 2 Sheet 10 entitled "Site 1 Cross Sections" with Revision #1 dated March 31, 2014.

Clarification Note: The under drain system proposed for Site was removed at RIDEM request.

ADDENDUM ITEM NO. 31:

DELETE From Volume 2 Sheet 12 entitled "Site 1 Planting Plan" dated March, 2014 **AND**

REPLACE Entire Volume 2 Sheet 12 entitled "Site 1 Planting Plan" with Revision #1 dated March 31, 2014.

Clarification Note: The under drain system proposed for Site was removed..

ADDENDUM ITEM NO. 32:

DELETE From Volume 2 Sheet 71 entitled "Drainage Details" dated March, 2014 **AND**

REPLACE Entire Volume 2 Sheet 71 entitled "Drainage Details" with Revision #1 dated March 31, 2014.

Clarification Note: The under drain system proposed for Site was removed.

ADDENDUM ITEM NO. 33:

MODIFY Volume 2 Sheet 41 entitled "Site 3 Grading and Geometry Plan 1" so that all work associated with the removal of the twin 36 inch culverts at Airport Road is at the discretion of the owner.

Clarification Note: The culvert removal may be removed from this project but should be included in the Contractor's Bid.

This Addendum No. 2 consists of 19 pages and the following 34 attachments:

1. Appendix A – Flow Data, Addendum No.2 dated 04/16/14 (1 page)
2. Permit to Alter Freshwater Wetlands, dated April 16, 2014 (8 Pages)
3. Geotechnical Report T.F. Green Wetland Mitigation Project Lakeshore Drive Culvert Replacement Warwick, Rhode Island (59 Pages)
4. Section 00 0320 Bid Form, Pages 1 thru 51 – Addendum No.2 dated 04/16/2014 (51 pages)
5. Section P-152 Excavation and Embankment – Addendum No.2 dated 04/16/2014 (8 pages)
6. Section P-156 Temporary Pollution Control – Addendum No.2 dated 04/16/2014 (4 pages)
7. Section D-701 Pipe for Storm Drains & Culverts – Addendum No.2 dated 04/16/2014 (8 pages)
8. Section M-004 Sand Filters – Addendum No.2 dated 04/16/2014 (4 pages)
9. Section X-106 Sheet Piling – Addendum No.2 dated 04/16/2014 (4 pages)
10. Section X-108 Force Main Pipe– Addendum No.2 dated April 16, 2014. (6 pages)
11. Section L-100 Lighting and Electrical Work – Addendum No.2 dated 04/16/2014 (10 pages)
12. Section L-108 Underground Power Cable for Airports – Addendum No.2 dated 04/16/2014 (12 pages)
13. Section L-109 Installation of Airport Vault Equipment – Addendum No.2 dated 04/16/2014 (8 pages)
14. Section L-110 Airport Underground Electrical Duct Banks and Conduits – Addendum No.2 dated 04/16/2014 (10 pages)
15. Section L-125 Installation of Airport Lighting Systems – Addendum No.2 dated 04/16/2014 (8 pages)
16. Section L-127 Precision Approach Path Indicators (PAPI) – Addendum No.2 dated 04/16/2014 (6 pages)
17. Section L-853 Retroreflective Edge Markers – Addendum No.2 dated 04/16/2014 (2 pages)
18. Section 202 Excavation and Embankment and On-Site Wetlands Fill - Addendum No.2 dated 04/16/2014 (10 pages)
19. Section 212 Maintenance and Cleaning of Erosion and Pollution Controls - Addendum No.2 dated 04/16/2014 (6 pages)
20. Section 701 Installation and Inspection of Water Facilities – Warwick Water Department Controls- Addendum No.2 dated 04/16/14 (16 pages)
21. Section 920 Riprap - Addendum No.2 dated 04/16/2014 (4 pages)
22. Section L02 Seeding - Addendum No.2 dated 04/16/2014 (8 pages)
23. Vol. 1 Sheet 3 – Dwg. G003 entitled “Quantities – Volume I” with Revision date 04/16/2014 (1 Sheet)
24. Vol 1 Sheet 4 - Dwg. G004 entitled “Quantities – Volume II” with Revision date 04/16/2014 (1 Sheet)
25. Vol. 1 Sheet 24 – Dwg. C102 entitled “Existing Conditions and Demolition Plan – Sheet 3” with Revision date 04/16/2014 (1 Sheet)
26. Vol. 1 Sheet 34 – Dwg. C401 entitled “Grading and Drainage Plan – Sheet 2” with Revision date 04/16/2014 (1 Sheet)
27. Vol. 1 Sheet 35 – Dwg. C402 entitled “Drainage Schedule” with Revision date 04/16/2014 (1 Sheet)
28. Vol. 1 Sheet 36 – Dwg. C403 entitled “Drainage Details – Sheet 1” with Revision date 04/16/2014 (1 Sheet)
29. Vol. 1 Sheet 38 – Dwg. C405 entitled “Drainage Details – Sheet 3” with Revision date 04/16/2014 (1 Sheet)

30. Vol. 1 Sheet 78 – Dwg. ES001 entitled "Erosion Control Notes" with Revision date 04/16/2014 (1 Sheet)
31. Vol. 2 Sheet 9 entitled "Site 1 Grading and Geometry Plan" with Revision date 03/31/2014 (1 Sheet)
32. Vol. 2 Sheet 10 entitled "Site 1 Cross Sections" with Revision date 03/31/2014 (1 Sheet)
33. Vol. 2 Sheet 12 entitled "Site 1 Planting Plan" with Revision date 03/31/2014 (1 Sheet)
34. Vol. 2 Sheet 71 entitled "Drainage Details" with Revision date 03/31/2014 (1 Sheet)

APPROVED BY: _____Date: _____
RIAC Signature

END OF ADDENDUM NO. 2

Appendix A

FLOW DATA

(from current Wetland Application)

	HEC-RAS Station	1-yr	10-yr	100-yr
Outfall 8 (Site 15)	4041	56.2	106.9	159.3
Buckeye Brook downstream of Airport Road discharge	8046	103.1	291.2	686.5
Buckeye Brook at Pinch Point in middle of reach	6833	75.6	213.4	490.3
Buckeye Brook upstream of Lakeshore confluence	6452	153.6	337.4	673.4
Buckeye Brook downstream of Lakeshore confluence (ie in Lakeshore Drive culvert)	6326	151.6	299.6	636.8

RHODE ISLAND
DEPARTMENT OF ENVIRONMENTAL MANAGEMENT
235 Promenade Street, Providence, RI 02908-5767 TDD 401-222-4462

RECEIVED
APR 16 2014
BY:

HAND DELIVERED

April 16, 2014

Rhode Island Airport Corporation
Kelly Fredericks, President and CEO
2000 Post Road
Warwick, RI 02886

PERMIT TO ALTER FRESHWATER WETLANDS

Re: Freshwater Wetlands Program Application No. 13-0109, GWD/UIC file# 001566, RIPDES file #RIR101063, and Water Quality Certification file# 13-0126 in reference to the location below:

> Approximately 3,000 feet south of Airport Road and approximately 3,500 feet southeast of its intersection with Post Road, as well as at and north of Lake Shore Drive, approximately 580 feet west of its intersection with Hoxsie Avenue, Assessor's Plat 321, Lot 004 and portions of Assessor's Plat 325, Lot 24, Assessor's Plat 327, Lot 250, and Assessor's Plat 328 Lot 486,Warwick, RI.

Dear Mr. Fredericks:

The Department of Environmental Management's ("DEM") Freshwater Wetlands Program ("Program") has completed its review of your **Application to Alter a Freshwater Wetland** regarding the proposed reconstruction of a portion of Runway 34 and Taxiway C at its terminus for FAA mandated runway safety area improvements including the installation of engineered material arresting system (EMAS), relocation of the vehicle service road, new drainage and other associated improvements and/or modifications to airport operations (e.g. lighting and navigational systems) with proposed mitigation including at least replacement of culverts under Lake Shore Drive, stream restoration and bank stabilization projects, wetland replication, habitat enhancement and floodplain compensation with associated landscaping as described and detailed in the material and information submitted in support of your application and on site plans received by the DEM on January 3, 2014 and April 9, 2014.

These site plans describing the project were made available for public comment as part of the forty-five (45) day public notice period required in accordance with the Freshwater Wetlands Act (R.I. General Laws (R.I.G.L.) Section 2-1-18 et seq.) and the procedures set forth in Rule 10.00 of the Rules and Regulations Governing the Administration and Enforcement of the Freshwater Wetlands Act (Rules). Subsequent revisions were made at the request of the Program to clarify portions of the project and address several minor items. These revisions did not result in any substantial modification of the project and did not require a re-Notice.

This Program received twelve (12) letters relating to your application, which were submitted during the public notice period. Some of the letters expressed both support for the projects while others expressed concern regarding your project's impacts to freshwater wetland values. This Program reviewed these letters together with any supporting documents and evaluated the potential impacts from the project upon the values mentioned in the letters. The Program has determined that the comments contained within these letters do not constitute objections of a substantive nature as defined in Rule 10.04(C)(3). Therefore, a public hearing pursuant to R.I.G.L. Section 2-1-22 is not required.

Pursuant to the Program's review and evaluation of your application including all supporting information and material, as well as the record to date, the Program has determined that this project does not represent a random, unnecessary or undesirable alteration of freshwater wetlands. Therefore, this Program hereby issues this permit to alter freshwater wetlands **subject to all controlling Rules and the Terms and Conditions set forth herein.**

Permit Terms and Conditions for Application No. 13-0109, and Water Quality Certification file# 13-0126:

1. This letter is the DEM's permit for this project under the R.I. Fresh Water Wetlands Act, Rhode Island General Laws (RIGL) Section 2-1-18 et seq. This application review has also included review related to the RIPDES "General Permit for Storm Water Discharge Associated with Construction Activity" as well as review of any stormwater infiltration system subject to the RI DEM "Rules for the Discharge of Non-Sanitary Wastewater and Other Fluid To or Below the Ground Surface". This Permit also serves as a Water Quality Certification by the State under Section 401 of the Clean Water Act and pursuant to the RI Water Quality Regulations.

2. This permit is specifically limited to the project, site alterations and limits of disturbance as detailed on the site plans submitted with your application and received by the DEM on January 3, 2014 and April 9, 2014. A copy of the site plans stamped approved by the DEM is enclosed. Changes or revisions to the project which would alter freshwater wetlands are not authorized without a permit from the DEM.

3. Where the terms and conditions of the permit conflict with the approved site plans, these terms and conditions shall be deemed to supersede the site plans.

4. A copy of the stamped approved site plans and a copy of this permit must be kept at the site at all times during site preparation, construction, and final stabilization. Copies of this permit and the stamped approved plans must be made available for review by any DEM representative upon request.

5. Within ten (10) days of the receipt of this permit, you must record this permit in the land evidence records of the City of Warwick and supply this Program with written documentation obtained from the City showing this permit was recorded.

6. The effective date of this permit is the date this letter was issued. This permit expires **July 1, 2016** unless renewed pursuant to Rule 11.02.

7. Any material utilized in this project must be clean and free of matter which could pollute any freshwater wetland.

8. Prior to commencement of site alterations, you shall erect or post signs resistant to the weather and at least twelve (12) inches wide and eighteen (18) inches long, which boldly identifies the initials "DEM" and the application number of this permit, at a minimum of three locations as follows: 1) Lake Shore Drive in the vicinity of Mitigation Sites No. 2 & 3; 2) at the terminus of Lake Shore Drive near the entrance to the subject property, and 3) at the northwest terminus of Cedar Swamp Road. These signs must be maintained at the site in a conspicuous location until such time that the project is complete and the DEM issues a Notice of Completion of Work for the project.

9. Temporary erosion and sediment controls detailed or described on the approved site plans and as identified in the Stormwater Pollution Prevention Plan ("SWPPP") prepared for this project shall be properly installed at the site prior to or commensurate with site alterations. Such controls shall be properly maintained, replaced, supplemented, or modified as necessary throughout the life of this project to minimize soil erosion and to prevent sediment from being deposited in any wetlands not subject to disturbance under this permit.

10. You are obligated to install, utilize and follow all best management practices detailed or described on the approved site plans, or as specified in the SWPPP, in the construction of the project to minimize or prevent adverse impacts to any adjacent freshwater wetlands and the functions and values provided by such wetlands.

11. In the event dewatering activities are necessary to dewater the area of unsuitable material excavated from the proposed runway safety area, and since no specific measures for dewatering control were depicted on the site plans, you must provide this Program with details of any dewatering equipment, filter bags, and/or dewatering basins anticipated to be used to control any silt-laden waters pumped from the excavated area and prevent discharge of silt-laden waters to wetland areas. Any revisions to the project SWPPP in this regards are also to be submitted to the Program at the same time. Any dewatering BMP's, including settling basins, are to be located in existing cleared upland areas within the approved limits of disturbance.

4. You are responsible for the proper installation, operation, maintenance and stability of any mitigative features, stormwater management facilities, and systems of treatment and control which are installed or used in compliance with this permit to prevent harm to adjacent wetlands.

13. Upon permanent stabilization of all disturbed soils, temporary erosion and/or sediment controls consisting of silt fence, compost filled filter socks and other stabilization measures utilized must be removed.

14. Excavation to compensate for loss in flood storage as shown on the approved site plans (Mitigation Sites 1 and 14) is mandatory and must be excavated and graded to final grade prior to placement of the proposed temporary sheet piling within the subject freshwater wetlands. Graded areas must at least be temporarily stabilized as soon as possible after grading to prevent erosion and sedimentation into adjacent freshwater wetlands. Written certification must be provided to this Program by a registered land surveyor or registered professional engineer that such excavation and grading has been accomplished as permitted. Such certification shall be submitted within twenty (20) days of completion of the required excavation and grading.

15. All construction activities involving soil disturbances within watercourses as part of work associated with Mitigation Sites 2 and 3 must be limited to the low flow period **between July 1 and September 15** to avoid migration of adult and juvenile river herring. Other work associated with this project, including specifically installation of temporary sheeting and removal or cutting it below existing grade (post-project), and stream stabilization improvements at Mitigation Site 15, must be limited to the low flow period of July 1 through October 31 of any calendar year. Work at these sites must temporarily cease in the event of any abnormally high stormwater runoff event during the low flow period. The channel reconfiguration and culvert replacements proposed in Mitigation Sites 2 and 3 are to be collectively completed in one season. In the event of a large storm event occurring during work at Mitigation Sites 2 and 3, the channel is to be stabilized, diversion pipes and pumping apparatus removed and coffer dams removed to let the stream flow throughout the entire channel.

16. A minimum final channel depth is to be obtained in the restored tributary to Buckeye Brook and culverts in Mitigation Sites 2 and 3 sufficient to accommodate adult fish passage during spawning migration.

17. All stream diversion bypass pipe intakes must utilize one-quarter inch (¼") screens and be placed in a manner to prevent entrainment of fish. Any pumping or in-stream work that may cause entrainment or impingement to out-migrating juvenile herring should be avoided and minimized.

18. Stream flow diversion in Mitigation Site 3 must be incremental and work segment length is not to exceed that which can be accomplished in one day. At the end of each day, the channel is to be stabilized, diversion pipes and pumping apparatus removed and coffer dams removed to let the stream flow through an open channel. Pump-around practices are to be substantially similar to that depicted in the "Typical Pump-Around Practice (Site 2, 3 and 15)" as depicted on Sheet 47 of 47 of Volume 2 of the approved site plans, also known as "Drawing 8.3". You must submit your Engineer's approved Contractor's plan for water management to this Program prior to construction.

19. All plantings of shrubs, trees or other forms of vegetation as shown or detailed on the approved plans, or detailed in this permit, must be installed as soon as possible after completion of final grading; weather and season permitting. Any plantings which fail to survive one full growing season shall be replaced in-kind. Replacement plantings shall be similarly guaranteed for one full growing season.

20. All plantings of trees and shrubs accomplished in compliance with this Permit, except for necessary replacement, must be allowed to develop naturally without being subjected to cutting or mowing, except as is consistent with the Vegetation Management Plan for removing any encroachments into Object Free Zones in line with runways.

21. An environmental consultant, experienced in site assessments and measures necessary to protect sensitive aquatic environments or sensitive ecosystems, must be employed prior to the commencement of site alterations to monitor this project and to ensure compliance with the terms and conditions of this permit. This Program must be notified in writing of the consultant chosen to comply with this condition and must receive monthly written progress reports during active construction, including any stabilization activities until disturbed soils are stabilized, from the consultant regarding compliance with this permit until such time that the project is complete or this Program issues a Notice of Completion of Work. A specialized consultant is required to monitor work in the following circumstances:

    - For Mitigation Sites 2, 3, and 15, a stream restoration expert-and, for Mitigation Sites 2 and 3, a fisheries expert- must be present or otherwise available in an oversight capacity for the work conducted during construction.

    - An environmental compliance monitor with experience in identifying soil and groundwater contamination must be on-site during both the excavation of Mitigation Area #1 and removal of unsuitable material associated with construction of the new runway safety area. (See related Permit Condition No. 22)

22. If at any time during this project there is evidence of a "Recognized Environmental Concern" as defined in ASTM E-1527-13, soils must be sampled to determine if they exceed the soil objectives in Rule 8.02.B of the "*Rules and Regulations for the Investigation and Remediation of Hazardous Material Releases*" as amended November 2011 ("Remediation Regulations"). If the soil sampling exceeds Table 1 or Table 2 of the Remediation Regulations, the RIDEM Office of Water Resources and Office of Waste Management must be notified.

23. Upon completion of each mitigation site, defined as completion of final grading, stabilization and replanting, the sites must be monitored for each of the first five full growing seasons following construction of the mitigation sites. Observations will occur at least two times during the growing season – in late spring/early summer and again in late summer/early fall- and are to include documentation of satisfaction of all "Success Standards" outlined in Section 5.2.3 of the "Volume 2-Wetland Mitigation Supplement" provided as part of your application documentation.

24. In addition to the monthly reports required by Permit Condition No. 21 above, or notification of exceedences of soil criteria as outlined in Permit Condition No. 22, you are required to provide the following written reports, notifications or certifications:

a) Notification of the overall commencement of the project, defined as installation of erosion controls or access preparatory to clearing and construction activities.

b) Individual written notification of commencement of construction for the following individual portions of the overall project: (1) Excavation activities associated with Mitigation Site 1; (2) Installation of temporary sheet piling to isolate the work area for the runway safety improvements; (3) Excavation activities associated with removal of unsuitable wetland peat materials for construction of runway safety improvements; (4) Construction activities associated with Mitigation Sites No. 2 and 3 (5) Construction activities associated with stream stabilization activities associated with Mitigation Site No. 15.

c) Immediate notification in the event an early migration of juvenile river herring is observed as a result of a large summer rainfall event during the allowable work window.

d) Immediate notification of any unauthorized alterations to freshwater wetlands resulting from either non-compliance with this Permit or from unanticipated failure of construction management measures (e.g. erosion controls, temporary sheeting, dewatering measures), together with a written description of any corrective action taken.

e) Notification of the completion of any mitigation site.

f) An annual monitoring report for each of the first five growing seasons of the Mitigation Sites is to be submitted no later than December 15 of the year being monitored. A copy of the monitoring reports required by the U.S. Army Corps of Engineers will suffice to satisfy this condition.

g) Written certification from a registered land surveyor or registered professional engineer that the stormwater drainage system including any and all subsurface detention basins, piping systems, catch basins, culverts, swales, sand filters and any other stormwater management control features have been constructed/installed in accordance with the site plans approved by this permit. This written certification must be submitted to this Program within twenty (20) days of its request or upon completion of the project.

h) Written notification upon completion of all elements of the proposed project and associated mitigation elements once it is ready for a final inspection towards issuance of a Notice of Completion of Work.

25. The Operations and Maintenance Plan outlining maintenance requirements for the stormwater management system is to be amended to require removal of sediment from the underground storage system when the sediment volume exceeds 10% of the total vault volume and shall be disposed of accordingly to an approved upland location.

26. This Program has made specific revisions to the approved site plans. These revisions are clearly marked in red on the approved plans. Specifically, a) clarification is made on sheet 29 of 47 regarding the proposed flow diversion system, and b) the proposed culvert removal at Site 3 designated as "Phase 3B" is not authorized by this permit, and is crossed off the approved site plans. Note that with respect to these culverts, the Department encourages a future Application for Permit Modification which improves the hydraulic capacity of these culverts for fish passage while maintaining necessary access to the nearby sewer line. This project must take place in compliance with these revisions.

27. The approved plans include the elimination or relocation of stormwater outfalls currently permitted by Rhode Island Pollution Discharge Elimination System ("RIPDES) permit number RI0021598. Based upon a review of the application material provided, the Department has determined that Pursuant to Rule 23 of the Regulations for the Rhode Island Pollution Discharge Elimination System ("RIPDES Regulations"), RIAC must update its application and submit a request for a modification of RIPDES Permit Number RI0021598. Within thirty (30) days from the date of this permit, RIAC shall submit an amended application that includes but is not limited to amendments to the site-wide Storm Water Pollution Prevention Plan (SWPPP) and drainage master plan.

Additionally, the Program has reviewed this project in accordance with the standards of the RIPDES General Permit for Storm Water Discharge Associated with Construction Activity ("CGP"). Construction Activities which disturb one (1) or more acres of land and where storm water runoff is directed, via a point source, into a separate storm sewer system or into the waters of the State, are required to seek coverage under the Rhode Island Pollutant Discharge Elimination System (RIPDES) storm water permit. Our review has determined that the project has been designed to meet the requirements of the 2013 GP. This determination therefore includes your final authorization to discharge storm water associated with construction activity under the CGP. For future references and inquiry, your permit authorization number is RIPDES No. RIR101063.

Both the owner and the contractor retained to undertake the construction activity are required to comply with all terms and conditions of the CGP. This includes maintaining the Soil Erosion and Sediment Control (SESC) Plan, performing the required inspections and maintenance of the selected Best Management Practices (BMPs), and retaining inspection records. Further information on the requirements of the CGP is available at:

http://www.dem.ri.gov/pubs/regs/regs/water/ripdesca.pdf .

Please be aware that the RIDEM's Rules and Regulations Governing the Establishment of Various Fees require that RIPDES CGP permit holders to pay an Annual Fee of $100.00. An invoice will be sent to the owner on record in May/June of each year if the construction was still active as of December 31st of the previous year. The owner will be responsible for the Annual Fee until the construction activity has been completed, the site has been properly stabilized, and a completed Notice of Termination (NOT) has been received by the RIPDES Program. A copy of the NOT can be found attached to the CGP on the web page referenced above.

You are required to comply with the terms and conditions of this permit and to carry out this project in compliance with the Rules at all times. Failure to do so may result in an enforcement action against you by the DEM.

In permitting the proposed alterations, the Program assumes no responsibility for damages resulting from faulty design or construction. This permit does not remove your obligation to obtain any local, state, or federal approvals or permits required by ordinance or law and does not relieve you from any duties owed to adjacent landowners with specific reference to any changes in drainage.

If you are aggrieved by this decision, you may, within thirty (30) days of the receipt of this letter, request an adjudicatory hearing in writing. This request must be sent directly to the Office of Administrative Adjudication ("OAA"), One Capitol Hill, Second Floor, Providence, RI 02903. Copies of the request should also be forwarded to both this Program and to the Office of Legal Services at 235 Promenade Street, Providence, RI 02908. Your written request for an adjudicatory hearing must be timely filed and should conform to the requirements of Rule 7.00(b) of the "Administrative Rules of Practice and Procedure for the Department of Environmental Management Administrative Adjudication Division for Environmental Matters", (AAD Rules). AAD Rule 7.00(b) provides:

> "The request for hearing shall state clearly and concisely the specific issues which are in dispute and the facts in support thereof, the relief sought if any, the license or permit sought or involved and any additional information required by applicable statues and regulations."

The written request must be accompanied by a fee of two thousand dollars ($2,000.00) in the form of a certified bank check or money order made payable to the Rhode Island General Treasurer; however, in the event that the cost of the hearing exceeds the fee paid, the Program through the AAD will require an additional fee which the applicant must submit prior to the DEM's issuance of any final decision regarding this application. The adjudicatory hearing will be held before a Hearing Officer from the AAD. Such hearing will be held in compliance with the AAD Rules, Chapter 42-35-1 et seq. of the R.I.G.L., and other governing laws, rules, and regulations adopted by the DEM. Please note that you have the right to be represented by legal counsel in any proceeding which may be held in this matter.

If you have any questions regarding this matter, you may contact me at this office (telephone: 401-222-6820, ext. 7402) or Nancy Freeman of my staff (ext. 7408).

Sincerely,

Charles A. Horbert

Charles A. Horbert, Program Supervisor
Office of Water Resources
Freshwater Wetlands Program
CAH/NLF/nlf

Enclosure: Approved Site Plans

xc: Mayor Scott Avedisian, City of Warwick
Wassim and Khloud Khiamia
Michael D. Zarum, Vice President and Chairman, Buckeye Brook Coalition
Richard Langseth, Greenwich Bay Watershed Group
Marcel A. Valois, RI Commerce Corp.
Laurie White, Greater Providence Chamber of Commerce
Philip Dercole
Lauren E. I. Slocum, Central Rhode Island Chamber of Commerce
Steven J. King, P.E., Quonset Development Corporation
Gregory A. Mancini, BuildRI
Michael F. Sabitoni, President, Rhode Island Building and Construction Trades Council
William J. DePasquale, Jr., Planning Director, City of Warwick
Edward Sanderson, Executive Director, RI Historical Preservation & Heritage Commission

ec: Michael P. Lewis, Director, RIDOT
Janet Coit, Director, RIDEM
Brian Moore, Chief of Groundwater & Wetlands Protection
Ronald Gagnon, Chief, Office of Customer and Technical Assistance
Leo Hellested, Chief, Office of Waste Management
Bonnie Stewart Administrative Adjudication Division

Marisa Desautel, Esq., RIDEM Office of Legal Services
Harold K. Ellis, Office of Compliance and Inspection
Eric Beck, P.E. RIPDES Program
Ernie Panciera, RIDEM UIC Program
Alisa Richardson, RIDEM Water Quality Program
Christopher Walusiak, RIDEM Office of Customer & Technical Assistance
Phillip Edwards, RIDEM Division of Fish & Wildlife
Michael Elliott, U.S. Army Corps of Engineers
Jeffrey Peterson, VHB, Inc.
Carl Tortolano, P.E., AECOM
Jay Brolin, RIAC
Kendra Beaver, Esq. RIAC

GEOTECHNICAL REPORT
T.F. GREEN WETLAND MITIGATION PROJECT
LAKESHORE DRIVE CULVERT REPLACEMENT
WARWICK, RHODE ISLAND

PREPARED FOR:
Jacobs Engineering Group, Inc.
Boston, Massachusetts

PREPARED BY:
GZA GeoEnvironmental, Inc.
Providence, Rhode Island

June 2013
File No. 33868.00

Copyright© 2013 GZA GeoEnvironmental, Inc.

GZA
GeoEnvironmental, Inc.

Engineers and Scientists

June 7, 2013
File No. 33868.00

530 Broadway
Providence
Rhode Island
02909
401-421-4140
Fax: 401-751-8613
http://www.gza.com

Mr. Eric LeGuelaff
Jacobs Engineering Group, Inc.
343 Congress Street
Boston, Massachusetts 02210

Re: Geotechnical Report
T.F. Green Wetland Mitigation Project
Lakeshore Drive Culvert Replacement
Warwick, Rhode Island

Dear Mr. LeGuelaff:

GZA GeoEnvironmental, Inc. (GZA) is pleased to provide you with our geotechnical report for the proposed Wetland Mitigation Project at T.F. Green Airport in Warwick, Rhode Island. This report was prepared in accordance with our subconsultant agreement dated November 28, 2012.

BACKGROUND

Jacobs Engineering Group, Inc. (Jacobs) is a subconsultant to Vanasse Hangen Brustlin, Inc. (VHB) for the development of wetland mitigation design for five sites at T.F. Green airport in Warwick, Rhode Island. An existing triple 30-inch reinforced concrete pipe (RCP) culvert under Lakeshore Drive, referred to as "Site 2", is planned to be replaced with box culverts as part of this project. Additionally, existing filled gravel roads located in the wetlands adjacent to the proposed culvert and within the airport fenced enclosure, referred to as "Site 3", is planned to be removed to original grades. The project site is bounded to the east and west by Lake Shore Drive, to the south by undeveloped wetland and to the north by Airport Road (see Figure 1***, Locus Plan***).

Electronic files of the existing site conditions were provided to GZA by Jacobs Engineering Group, Inc. (Jacobs). These files were used to develop the attached Figure 2, ***Boring Location Plan*** and Figure 3, ***Test Pit Location Plan***. Elevations provided in this report are in feet and correspond to the topographic contours on the plans provided, and are referenced to the NGVD 1929 (MSL) datum.

Based on preliminary design information provided by Jacobs, it is anticipated the three existing 30-inch diameter culvert pipes will be replaced with three larger pre-cast concrete box culverts. The existing grade of the roadway is approximately elevation 15 to 16 feet, while the invert of the stream bed is approximately elevation 11.2 feet. A 10-foot wide by

Copyright© 2013 GZA GeoEnvironmental, Inc.

4-foot deep box culvert will be installed between two 4-foot wide by 3-foot high box culverts. The larger middle culvert will be filled with approximately one foot of soil to the stream invert to provide a natural channel bottom, while the smaller culverts on either side will be installed with the concrete invert at the bottom of the stream bed elevation. It is anticipated the top of the culverts will be approximately one foot below the road surface. It is also anticipated that the existing roadway will be reconstructed to the existing lines and grades.

The primary objectives of our study were to obtain subsurface information at the site of a proposed culvert replacement on Lakeshore Drive, and to develop geotechnical design and construction recommendations for the new culvert. Additionally, test pits were excavated into several gravel road areas located within the existing wetlands adjacent to the proposed culvert in order to assess the consistency of the roadway fill material with respect to potential re-use. This report and the recommendations are subject to the Limitations in Appendix A.

GEOLOGIC SETTING

Available United States Geological Survey (USGS) publications were reviewed in order to obtain an understanding of the area geology. According to the Surficial Geology Map of the East Greenwich Quadrangle, Rhode Island, dated 1955, the surficial soils in the vicinity of the site are comprised of swamp deposits over glacial outwash plain deposits. The glacial outwash is described as primarily well sorted sand, with local deposits of coarse gravel.

The corresponding map of Bedrock geology in the East Greenwich quadrangle published in 1952 shows bedrock underlying the site is of the Rhode Island Formation. This unit is characterized by gray to dark gray, fine to coarse-grained sandstone, shale and conglomerate, with minor beds of meta-anthracite.

SUBSURFACE EXPLORATIONS

Four test borings and four test pits were completed between December 10 and 14, 2012. The locations of the explorations are shown on ***Figure 2, Exploration Location Plan.*** Soil classifications and nomenclature used in this report are in accordance with the Burmister soil classification system. Test boring logs, test pit logs, and a complete description of the Burmister classification system are included in Appendix B. All explorations were observed and logged by GZA personnel.

Test Borings

The test borings, designated GZ-1 through GZ-4, were drilled by New Hampshire Boring of Brockton Massachusetts and were advanced to depths ranging between 21 and 100 feet below existing grade using a track-mounted bombardier drill rig. All of the borings were drilled within the proposed box culvert footprint and borings were advanced by driving HW (4-inch inside diameter) casing. Split-spoon soil samples were obtained at five-foot intervals or less in conformance with ASTM D-1586, the Standard Penetration Test (SPT), to obtain an indication of the relative density and consistency of the underlying soils. The test consists of driving a 1-3/8-inch inside diameter standard split-spoon sampler at least 18

inches with a 140-pound hammer dropping from a height of 30 inches. The SPT N-value is the number of blows required to drive the sampler from the 6 to 18 inch penetration interval.

Test Pits

Test pits TP-1 through TP-4 were excavated on December 14, 2012 by RIAC of Warwick, Rhode Island. A track-mounted excavator was utilized to advance the excavations to depths ranging from 3 to 4 feet below the existing ground surface. All test pits were terminated when the excavator encountered natural soil material or groundwater.

SUBSURFACE CONDITIONS

The following paragraphs describe the subsurface conditions encountered in the test borings conducted at the Lakeshore Drive culvert replacement site (Site 2), and in the test pits conducted along the gravel roads within the wetland mitigation area (Site 3). Refer to the exploration logs in Appendix B for specific details.

Lakeshore Drive Culvert Replacement (Site 2)

The generalized soil conditions observed in the test borings at the Lakeshore Drive culvert site (Site 2) consisted of a layer of asphalt, underlain by granular fill, organic soils, and deposits of stratified silts, fine to coarse sands and gravel. Bedrock was not encountered. Groundwater was observed within 2 to 3 feet of the ground surface. The subsurface conditions are discussed in more detail in the following sections.

Asphalt

A 2- to 5-inch thick layer of asphalt was encountered at the ground surface at all test boring locations performed at the Lakeshore Drive culvert location

Granular Fill

Granular fill was encountered at all boring locations below the asphalt extending to depths between approximately 7 and 14.3 feet below grade. The fill was generally thicker on the north side of the roadway. The fill consisted of sand and gravel with relatively low amounts of silt. In borings GZ-2, GZ-3 and GZ-4 slight to strong petroleum/tar odors were detected from samples taken between depths of 4 to 6 feet below grade. The relative density of the fill ranged from loose to dense (typically medium dense).

Peat and Organic Silt

Organic soils were encountered in all the borings at depths between approximately 7 and 14.3 feet below the ground surface. The thickness of the organic soils ranged between approximately 10 and 15.5 feet, and the depths to the bottom of the organic soils ranged between 18 and 27.5 feet below grade. The organic soils consisted typically of a thick layer of fibrous peat, with interbedded seams of sand and organic clayey silt at the

bottom of the layer. Standard penetration test N-values through these soils ranged between 3 and 8 indicating relative densities of soft to medium stiff.

Glacial Outwash Deposits

The organic soils were underlain by a thick deposit of stratified sands and silts (Glacial Outwash) consisting of sand, with occasional intervals of more gravelly material or silts and clays, was encountered at all boring locations. The outwash material was encountered at depths ranging between 18 and 24 feet below ground surface, and extended to the bottom of the explorations at depths ranging from 21 to 100 feet below ground surface. SPT N-values in the outwash material ranged between 6 and 53 indicating relative densities of loose to very dense.

Groundwater

Groundwater was encountered at all the boring explorations. Based on observations during drilling, the groundwater levels were inferred at elevations ranging from 13.0 to 14.5 feet. It is assumed that the groundwater levels across this portion of the site are at or above the water level in the adjacent wetlands and Buckeye Brook. Fluctuations of the groundwater levels are anticipated to occur due to variations in rainfall and other factors different than those prevailing at the time of the readings.

Wetland Area Gravel Road Test Pits (Site 3)

The soil conditions encountered in the test pits excavated through the gravel roadways in the wetland area generally consisted of approximately 2.5 to 3.5 feet of granular fill over a buried topsoil layer at the original ground surface.

Topsoil

A 3 to 6 inch thick layer of topsoil was encountered at the ground surface at TP-3 and TP-4 locations.

Granular Fill

Granular Fill was encountered below the topsoil layer at test pit locations TP-3 and TP-4, and at the ground surface at TP-1 and TP-2. The fill extended to depths between approximately 2.5 to 3.5 feet below grade. The fill generally consisted of sand and gravel with relatively low amounts of silt.

Buried Topsoil

A 6-inch thick layer of buried topsoil was encountered below the fill layer in test pits TP-1, -3, and -4. The buried topsoil consisted of silt and sand with trace amounts of vegetation and roots.

Granular Soil

Granular soil, consisting typically of fine sand with varying amounts of silt and gravel, was encountered below the buried topsoil layer at TP-1, TP-2 and TP-4. The granular soil was encountered at depths ranging from 2.5 to 4 feet below the ground surface and extended to the bottom of the explorations at depths ranging from 3 to 4.5 feet.

LABORATORY TESTING

Mechanical grain-size distribution sieve analyses were conducted on seven soil samples selected from the test pits, in general accordance with ASTM D-422. The results of the tests are summarized below, and the results are included in Appendix C.

Boring / Test Pit	Sample	Depth (ft)	Burmister Classification	Percent Silt/Clay	Percent Sand	Percent Gravel
TP-1	S-1	0-2	Brown, f-c SAND and f-c GRAVEL, little silt	13.3	51.7	35
TP-1	S-2	1-3.5	Brown f-c SAND, some f-c Gravel. trace Silt	7.5	70.8	21.7
TP-2	S-1	0-1	Brown, f-c SAND, trace fine Gravel, trace Silt	8.5	82.6	8.9
TP-2	S-2	1-3.5	Brown, f-c SAND, little f-c Gravel, trace Silt	7.1	82	10.9
TP-3	S-1	0.3-1	Brown, f-c SAND, trace Silt, trace Gravel	9.3	81.8	8.9
TP-3	S-2	1-2.5	Dark brown, f-c SAND, some f-c Gravel, little Silt	13.4	52.6	34
TP-4	S-1	0.5-3.5	Light brown, f-c SAND, little f-c Gravel, trace Silt	5.8	79	15.2

Note that the above results do not reflect the amount of cobbles and boulders present at the sample depth. For this information, refer to the exploration logs in Appendix B or in the description of the subsurface conditions, above.

Environmental testing was also performed on four samples from the borings, at the request of the Rhode Island Airport Corporation, due to petroleum-like odors that were noted in the samples of fill below the roadway. The four samples (one from each test boring at a depth of 4 to 6 feet) were submitted to Rhode Island Analytical Laboratories of Warwick, Rhode Island for Total Petroleum Hydrocarbons (TPH) and Volatile Organic Compounds (VOC's). Environmental recommendations regarding this material are beyond the scope of this report. The laboratory test results are included in Appendix D. Evaluation of environmental contamination is beyond the scope of this study.

CONCLUSIONS AND RECOMMENDATIONS

The following sections present geotechnical recommendations for the proposed Lakeshore Drive culvert design and construction. The recommendations have been developed based on subsurface exploration data and preliminary design information provided to GZA by Jacobs.

Culvert Foundations

The organic soils encountered at the culvert location are highly compressible and are not considered suitable for support of shallow foundations due to the potential for excessive settlement of the ground surface and/or culvert.

Given the presence of the thick layer of peat at the site, the use of driven piles is considered the best foundation option to support the culverts and to avoid excessive settlement. Excavation of the peat and replacement with compacted structural fill is not considered practical due to the depth of the unsuitable soils and the presence of shallow groundwater. It is anticipated, however, that the proposed box culverts will displace a significant volume of soil, and the net increase in the bearing stress on the underlying peat layer may actually be less than the existing effective stress. If this is the case, then it may be feasible to install the culverts to bear on the existing soils without the use of piles. This option would be significantly lower in cost than the pile option, but has the risk of some long term creep settlement occurring. The pile foundation and shallow bearing options are discussed in more detail in the following sections.

Pile Foundations

The proposed culverts may be founded on driven piles deriving support through a combination of friction and end bearing in the underlying glacial outwash deposits which extend to a depth greater than 100 feet. Given the large footprint of the culverts, it is recommended that the piles be installed and a reinforced concrete relieving platform be constructed, on which the pre-cast culverts may be placed. The relieving platform should be designed for the culvert loads, as well as any backfill placed above and the roadway traffic surcharge load.

Treated timber piles are considered a suitable pile type for this application. Based upon a preliminary analysis, it is anticipated that an approximately 60-foot long timber pile could develop an allowable design capacity of approximately 20 tons. Timber piles should be pressure treated southern yellow pine. Other pile types that may also be considered are pre-cast, pre-stressed concrete piles and concrete filled steel pipe piles. As there are not anticipated to be any raise in the site grades by filling, downdrag forces from settlement of the peat do not need to be included in the pile capacity.

Shallow Foundations

As previously discussed, it is anticipated that the new culvert structures may possibly result in no net increase in the vertical effective stress on the peat layer. It is also anticipated that there will be no filling to raise the existing site grades. If this is the case, then

it may be possible to construct the culverts to bear on the existing soils without inducing long term primary consolidation settlement in the peat layer.

It should be noted, however, that organic soils will experience long-term secondary consolidation, or creep, after primary consolidation is complete. It is therefore anticipated that the existing roadway embankment is currently experiencing creep settlement at a slow rate, and that the newly constructed culverts would also settle uniformly with the embankment fill. The risk and impact of this settlement must be evaluated in the decision process if this approach is selected.

If the culverts will bear on the existing soils, the bottom of the excavation should be excavated carefully to avoid disturbance of the subgrade, and should then be covered with a layer of woven geotextile filter fabric, followed by a 12-inch thick layer of crushed stone. As this work will be performed below the groundwater level, a dewatering system will need to be installed to allow the excavation to be performed under dry conditions.

Construction Dewatering, Control of Water, and Drainage

The groundwater elevation at Site 2 was approximately 13 feet upon completion of the borings, ranging from approximately 2 to 3 feet below the ground surface. Groundwater will likely be encountered during construction. It is anticipated that dewatering can be accomplished using localized sump pumps, however it should be noted that the level of effort required for proper dewatering may vary depending on the groundwater conditions encountered at the time of construction. If localized sumping is not effective, groundwater cutoff through the use of temporary sheeting or the installation of well points may be necessary. Discharge of groundwater must be in accordance with local and state regulations.

As the culverts are located at an existing brook, the construction will need to be performed in a manner that will allow the stream flows to pass through the work area, such as the use of temporary bypass culverts or sheeting.

Temporary Earth Support for Excavations

Due to the anticipated excavations extending below the water table, it is recommended that steel sheet piling be utilized for support of the excavations. The use of steel sheet pile cofferdams will also facilitate the dewatering efforts, and may also be utilized to phase the construction to allow traffic to pass through the work area and to bypass the stream flows during construction.

Utilities

Buried utilities including water and sewer lines are located across the site and within the proposed new culvert footprint. Relocation of these buried utilities will therefore be necessary. The utilities should be installed on the proper bedding materials in accordance with the manufacturer's recommendations or specifications, and should be backfilled as described below.

Backfill and Compaction

Subsequent to the culvert installation, the excavations should be backfilled with "Granular Fill" placed in controlled horizontal lifts compacted with vibratory compaction equipment. A maximum loose lift thickness of 12-inches is recommended for vibratory rollers; this thickness should be reduced to 6-inches for hand operated equipment. All backfill material should be compacted to at least 95% of the maximum dry density as determined by ASTM D-1557 (modified Proctor test).

Soil Design Parameters

The following table presents the recommended soil design parameters for use on this project:

Soil Type	Total Unit Weight (γ total)	Internal Friction Angle (φ)	Cohesion (psf)
Existing Fill/ Structural Backfill	125 pcf	32°	0
Peat	70 pcf	0°	500 psf
Glacial Outwash	115 pcf	32°	0
Outwash	125 pcf	34°	0

Lateral Earth Pressures

The concrete box culverts and head walls or wingwalls will need to be designed for lateral earth pressures. It is recommended that the walls be backfilled with free draining Granular Fill compacted to at least 95% of the maximum dry density (ASTM D1557). The walls should be designed for any surcharge loading that may occur, including construction traffic. For walls that are unrestrained at the top, an active soil pressure coefficient of 0.3 is recommended. For retaining walls that are restrained at the top, an at-rest soil pressure coefficient of 0.5 is recommended.

Contract Documents and Construction Monitoring

It is recommended that GZA be considered to develop earthwork construction plans and specifications, as well as construction observation and testing services. Services may include observation of excavated subgrades, placement and compaction of fill, performance of field density tests, and general observation for compliance with recommendations in this report and the contract documents.

We trust that this report addresses the pertinent geotechnical issues for this project. Please do not hesitate to contact the undersigned if there are any questions.

Very truly yours,

GZA GEOENVIRONMENTAL, INC.

William L. Ladd, P.E.
Senior Project Manager

Thomas E. Billups, P.E.
Project Reviewer

David R. Carchedi, Ph.D., P.E.
Senior Principal

WLL/DRC:jm

Attachments: Figures
Appendix A: Limitations
Appendix B: Subsurface Exploration Logs
Appendix C: Geotechnical Laboratory Test Results
Appendix D: Environmental Laboratory Test Results

j:\geo\33868.wll\report\33868 - report-final.docx

FIGURES

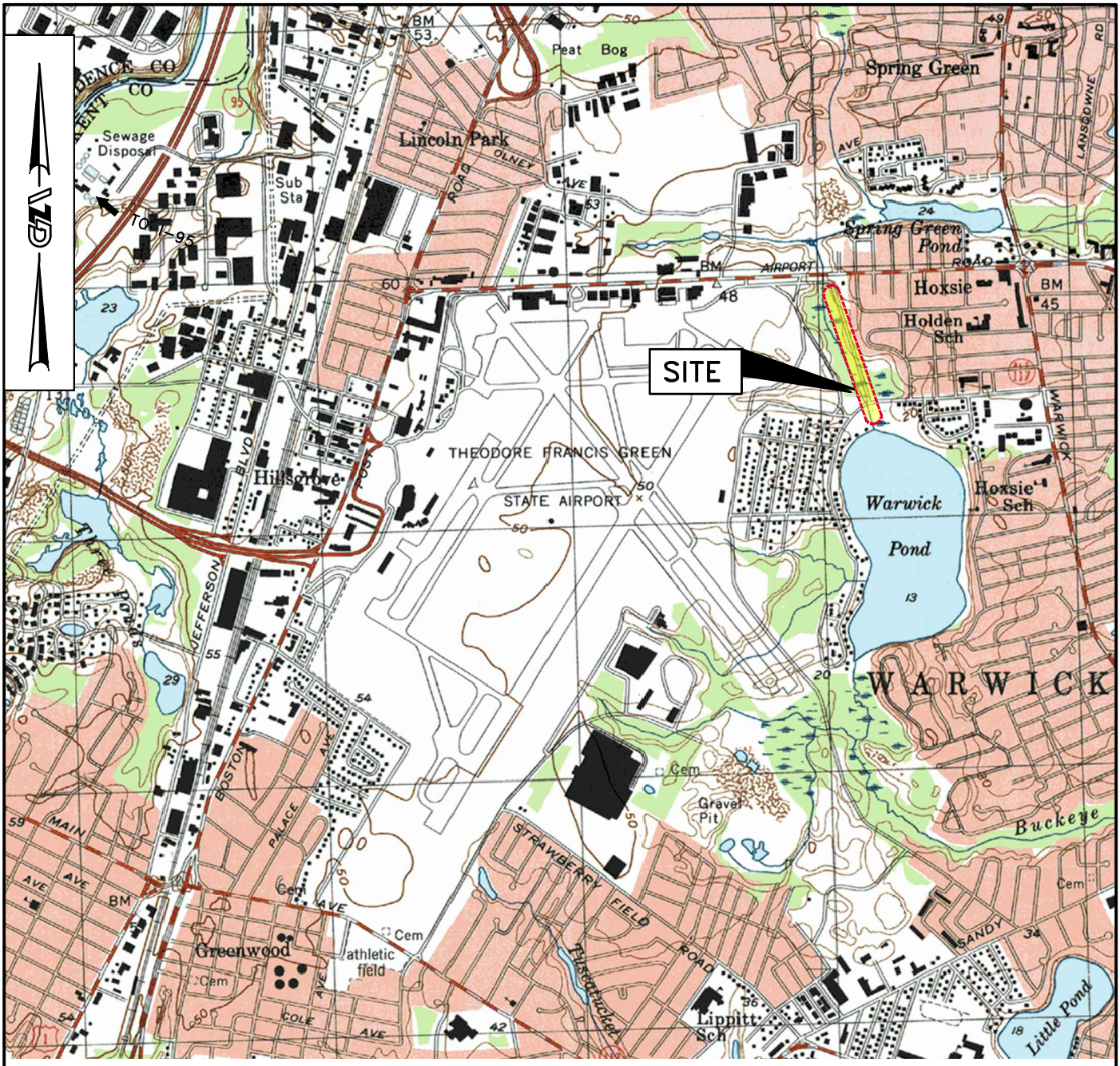

0 1000' 2000' 4000' 6000'

APPROX. SCALE IN FEET (1"=2000')

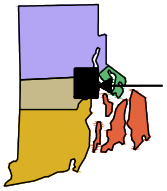

QUADRANGLE LOCATION

SOURCE:

BASE MAP FROM THE FOLLOWING USGS QUADRANGLE MAP:
EAST GREENWICH, RHODE ISLAND (1996)

DIGITAL TOPOGRAPHIC MAPS PROVIDED MY MAPTECH. INC.

COUNTOUR ELEVATIONS REFERENCE NGVD 29,
CONTOURS ARE SHOWN IN FEET AT 10 FOOT INTERVALS

N
W E
S

UNLESS SPECIFICALLY STATED BY WRITTEN AGREEMENT, THIS DRAWING IS THE SOLE PROPERTY OF GZA GEOENVIRONMENTAL, INC. (GZA). THE INFORMATION SHOWN ON THE DRAWING IS SOLELY FOR USE BY GZA'S CLIENT OR THE CLIENT'S DESIGNATED REPRESENTATIVE FOR THE SPECIFIC PROJECT AND LOCATION IDENTIFIED ON THE DRAWING. THE DRAWING SHALL NOT BE TRANSFERRED, REUSED, COPIED, OR ALTERED IN ANY MANNER FOR USE AT ANY OTHER LOCATION OR FOR ANY OTHER PURPOSE WITHOUT THE PRIOR WRITTEN CONSENT OF GZA. ANY TRANSFER, REUSE, OR MODIFICATION TO THE DRAWING BY THE CLIENT OR OTHERS, WITHOUT THE PRIOR WRITTEN EXPRESS CONSENT OF GZA, WILL BE AT THE USER'S SOLE RISK AND WITHOUT ANY RISK OR LIABILITY TO GZA.

T.F. GREEN WETLAND MITIGATION
WARWICK, RHODE ISLAND

PREPARED BY:
GZA GeoEnvironmental, Inc.
Engineers and Scientists
www.gza.com

PREPARED FOR:
JACOBS ENGINEERING GROUP, INC.
PROVIDENCE, RI

LOCUS PLAN

PROJ MGR: WLL	REVIEWED BY: WLL	CHECKED BY: TEB	FIGURE 1
DESIGNED BY: WLL	DRAWN BY: CRB	SCALE: 1"=2000'	
DATE: JANUARY, 2013	PROJECT NO. 33868.00	REVISION NO.	SHEET NO. 1 OF 4

© 2013 – GZA GeoEnvironmental, Inc. GZA-J:\Geo\33868.wil\Figures\33868.00_F1-3.dwg [LOCUS] January 25, 2013 – 2:56pm carl.bergden

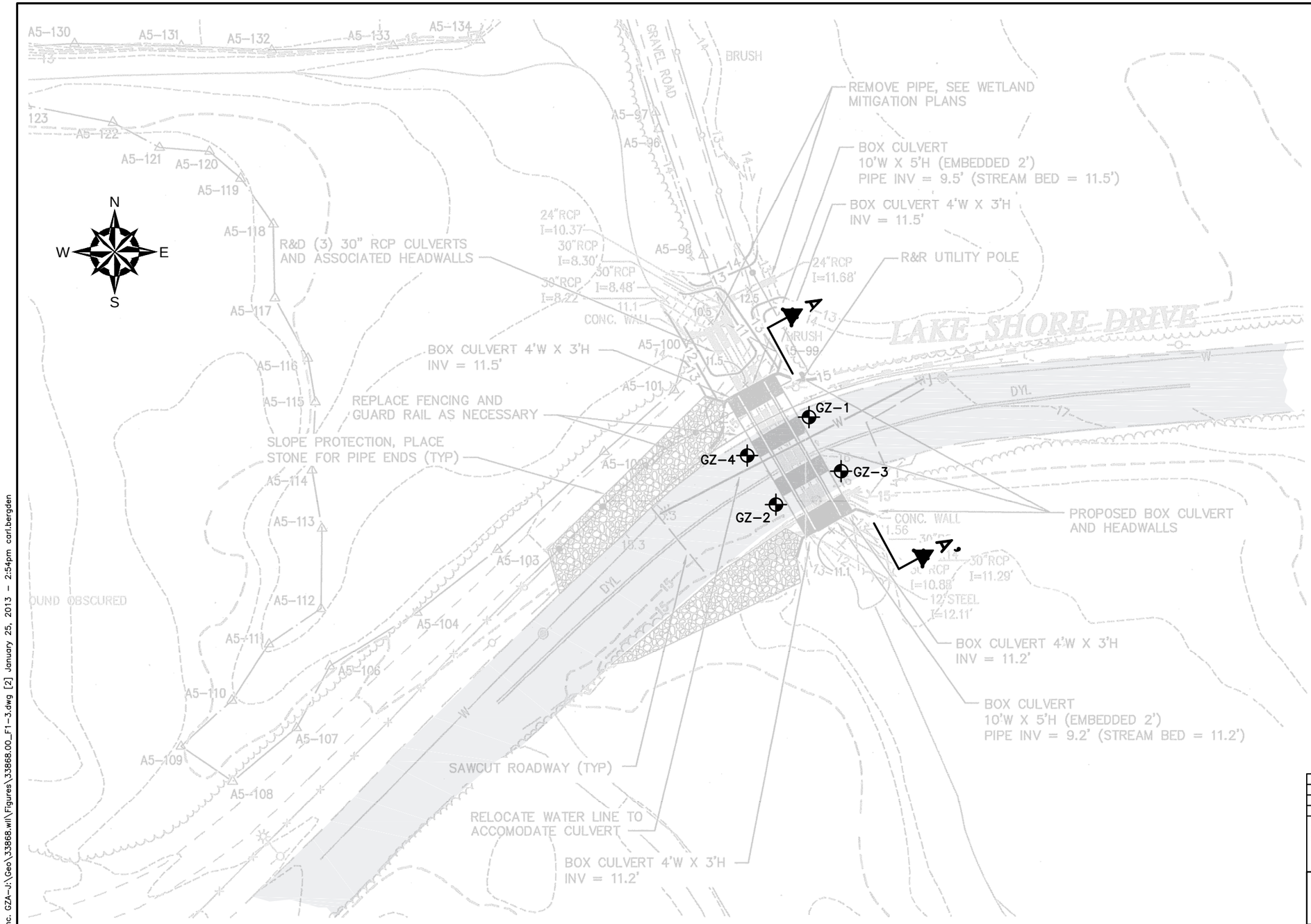

NOTES:

1) BASE MAP DEVELOPED FROM PLAN PROVIDED BY JACOBS ENGINEERING GROUP, INC. AND PREPARED BY VANASSE HANGEN BRUSTLIN, INC., ENTITLED "CONCEPTUAL CULVERT ANALYSIS," DATED JANUARY 2011, ORIGINAL SCALE 1"=40'.

2) THE LOCATIONS OF THE EXPLORATIONS WERE APPROXIMATELY DETERMINED BY LINE OF SIGHT AND TAPE MEASUREMENTS FROM EXISTING TOPOGRAPHIC FEATURES. THESE DATA SHOULD BE CONSIDERED ACCURATE ONLY TO THE DEGREE IMPLIED BY THE METHOD USED.

LEGEND:

GZ-1 — INDICATES TEST BORINGS PERFORMED BY NEW HAMPSHIRE BORING, INC. BETWEEN DECEMBER 10 AND 12, 2012 AND OBSERVED BY GZA PERSONNEL.

A A' — INDICATES SUBSURFACE PROFILE LOCATION (SEE FIGURE 4)

0 20 40 80
SCALE IN FEET

NO.	ISSUE/DESCRIPTION	BY	DATE

UNLESS SPECIFICALLY STATED BY WRITTEN AGREEMENT, THIS DRAWING IS THE SOLE PROPERTY OF GZA GEOENVIRONMENTAL, INC. (GZA). THE INFORMATION SHOWN ON THE DRAWING IS SOLELY FOR USE BY GZA'S CLIENT OR THE CLIENT'S DESIGNATED REPRESENTATIVE FOR THE SPECIFIC PROJECT AND LOCATION IDENTIFIED ON THE DRAWING. THE DRAWING SHALL NOT BE TRANSFERRED, REUSED, COPIED, OR ALTERED IN ANY MANNER FOR USE AT ANY OTHER LOCATION OR FOR ANY OTHER PURPOSE WITHOUT THE PRIOR WRITTEN CONSENT OF GZA. ANY TRANSFER, REUSE, OR MODIFICATION TO THE DRAWING BY THE CLIENT OR OTHERS, WITHOUT THE PRIOR WRITTEN EXPRESS CONSENT OF GZA, WILL BE AT THE USER'S SOLE RISK AND WITHOUT ANY RISK OR LIABILITY TO GZA.

T.F. GREEN WETLAND MITIGATION
WARWICK, RHODE ISLAND

BORING LOCATION PLAN

PREPARED BY:
GZA GeoEnvironmental, Inc.
Engineers and Scientists
www.gza.com

PREPARED FOR:
JACOBS ENGINEERING GROUP, INC.
PROVIDENCE, RI

PROJ MGR: WLL	REVIEWED BY: WLL	CHECKED BY: TEB	FIGURE 2
DESIGNED BY: WLL	DRAWN BY: CRB	SCALE: AS NOTED	
DATE: JANUARY, 2013	PROJECT NO. 33868.00	REVISION NO.	SHEET NO. 2 OF 4

© 2013 – GZA GeoEnvironmental, Inc. GZA-L:\Geo\33868.wll\Figures\33868.00_F1-3.dwg [2] January 25, 2013 – 2:54pm carl.bergden

0 50 100 200

SCALE IN FEET

NOTES:

1) BASE MAP DEVELOPED FROM PLAN PROVIDED BY JACOBS ENGINEERING GROUP, INC., ENTITLED "WETLANDS MITIGATIONS SITE 3 TEST PIT LOCATION REQUEST", FOR RHODE ISLAND AIRPORT CORPORATION, ORIGINAL SCALE 1"=250'.

2) THE LOCATIONS OF THE TEST PITS WERE APPROXIMATELY DETERMINED BY LINE OF SIGHT FROM EXISTING TOPOGRAPHIC FEATURES. THESE DATA SHOULD BE CONSIDERED ACCURATE ONLY TO THE DEGREE IMPLIED BY THE METHOD USED.

LEGEND:

TP-4 — INDICATES TEST PITS EXCAVATED BY RHODE ISLAND AIRPORT CORPORATION ON DECEMBER 13, 2012 AND OBSERVED BY GZA PERSONNEL.

NO.	ISSUE/DESCRIPTION	BY	DATE

UNLESS SPECIFICALLY STATED BY WRITTEN AGREEMENT, THIS DRAWING IS THE SOLE PROPERTY OF GZA GEOENVIRONMENTAL, INC. (GZA). THE INFORMATION SHOWN ON THE DRAWING IS SOLELY FOR USE BY GZA'S CLIENT OR THE CLIENT'S DESIGNATED REPRESENTATIVE FOR THE SPECIFIC PROJECT AND LOCATION IDENTIFIED ON THE DRAWING. THE DRAWING SHALL NOT BE TRANSFERRED, REUSED, COPIED, OR ALTERED IN ANY MANNER FOR USE AT ANY OTHER LOCATION OR FOR ANY OTHER PURPOSE WITHOUT THE PRIOR WRITTEN CONSENT OF GZA. ANY TRANSFER, REUSE, OR MODIFICATION TO THE DRAWING BY THE CLIENT OR OTHERS, WITHOUT THE PRIOR WRITTEN EXPRESS CONSENT OF GZA, WILL BE AT THE USER'S SOLE RISK AND WITHOUT ANY RISK OR LIABILITY TO GZA.

T.F. GREEN WETLAND MITIGATION
WARWICK, RHODE ISLAND

TEST PIT LOCATION PLAN

PREPARED BY:
GZA GeoEnvironmental, Inc.
Engineers and Scientists
www.gza.com

PREPARED FOR:
JACOBS ENGINEERING GROUP, INC.
PROVIDENCE, RI

PROJ MGR: WLL	REVIEWED BY: WLL	CHECKED BY: TEB	FIGURE 3
DESIGNED BY: WLL	DRAWN BY: CRB	SCALE: AS NOTED	
DATE: JANUARY, 2013	PROJECT NO. 33868.00	REVISION NO.	SHEET NO. 3 OF 4

© 2013 – GZA GeoEnvironmental, Inc. GZA-J:\Geo\33868.wll\Figures\33868.00_F1-3.dwg [3] January 25, 2013 – 2:55pm carl.bergden

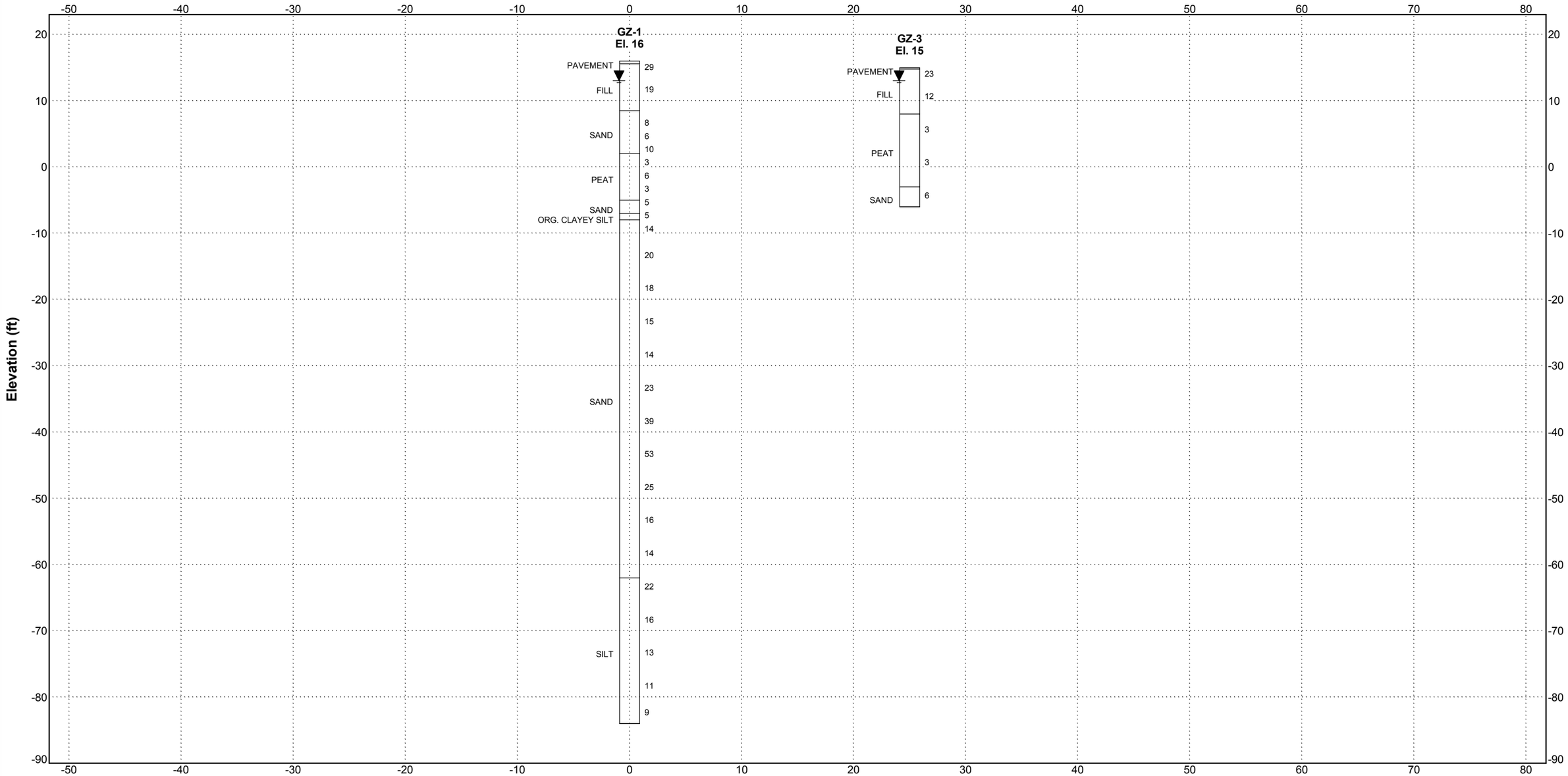

Prepared By:

GZA GeoEnvironmental, Inc.
Engineers and Scientists
440 Ninth Avenue, 18th Floor
New York, NY 10001
(212) 594-8140
www.gza.com

TF Green Wetland Mitigation
Lakeshore Drive Culvert
Warwick, Rhode Island

Project No.: 33868.00

File Name: <<DrawingFile>>

Project Mgr.:
Designed By:
Reviewed By:
Drawn By:

Revision No.:
Date/Time: 1/30/2013/5:03:25 PM

Title: SUBSURFACE PROFILE A-A'

Figure No.: **4**

<<DrawingFileSpec>>

APPENDIX A

LIMITATIONS

GEOTECHNICAL LIMITATIONS

Use of Report

1. GZA GeoEnvironmental, Inc. (GZA) prepared this report on behalf of, and for the exclusive use of our Client for the stated purpose(s) and location(s) identified in the Proposal for Services and/or Report. Use of this report, in whole or in part, at other locations, or for other purposes, may lead to inappropriate conclusions; and we do not accept any responsibility for the consequences of such use(s). Further, reliance by any party not expressly identified in the agreement, for any use, without our prior written permission, shall be at that party's sole risk, and without any liability to GZA.

Standard of Care

2. GZA's findings and conclusions are based on the work conducted as part of the Scope of Services set forth in Proposal for Services and/or Report, and reflect our professional judgment. These findings and conclusions must be considered not as scientific or engineering certainties, but rather as our professional opinions concerning the limited data gathered during the course of our work. If conditions other than those described in this report are found at the subject location(s), or the design has been altered in any way, GZA shall be so notified and afforded the opportunity to revise the report,as appropriate, to reflect the unanticipated changed conditions .

3. GZA's services were performed using the degree of skill and care ordinarily exercised by qualified professionals performing the same type of services, at the same time, under similar conditions, at the same or a similar property. No warranty, expressed or implied, is made.

Subsurface Conditions

4. The generalized soil profile(s) provided in our Report are based on widely-spaced subsurface explorations and are intended only to convey trends in subsurface conditions. The boundaries between strata are approximate and idealized, and were based on our assessment of subsurface conditions. The composition of strata, and the transitions between strata, may be more variable and more complex than indicated. For more specific information on soil conditions at a specific location refer to the exploration logs.

5. In preparing this report, GZA relied on certain information provided by the Client, state and local officials, and other parties referenced therein which were made available to GZA at the time of our evaluation. GZA did not attempt to independently verify the accuracy or completeness of all information reviewed or received during the course of this evaluation.

6. Water level readings have been made in test holes (as described in the Report) and monitoring wells at the specified times and under the stated conditions. These data have been reviewed and interpretations have been made in this Report. Fluctuations in the level of the groundwater however occur due to temporal or spatial variations in areal recharge rates, soil heterogeneities, the presence of subsurface utilities, and/or natural or artificially induced perturbations. The water table encountered in the course of the work may differ from that indicated in the Report.

7. GZA's services did not include an assessment of the presence of oil or hazardous materials at the property. Consequently, we did not consider the potential impacts (if any) that contaminants in soil or groundwater may have on construction activities, or the use of structures on the property.

8. Recommendations for foundation drainage, waterproofing, and moisture control address the conventional geotechnical engineering aspects of seepage control. These recommendations may not preclude an environment that allows the infestation of mold or other biological pollutants.

Compliance with Codes and Regulations

9. We used reasonable care in identifying and interpreting applicable codes and regulations. These codes and regulations are subject to various, and possibly contradictory, interpretations. Compliance with codes and regulations by other parties is beyond our control.

Cost Estimates

10. Unless otherwise stated, our cost estimates are only for comparative and general planning purposes. These estimates may involve approximate quantity evaluations. Note that these quantity estimates are not intended to be sufficiently accurate to develop construction bids, or to predict the actual cost of work addressed in this Report. Further, since we have no control over either when the work will take place or the labor and material costs required to plan and execute the anticipated work, our cost estimates were made by relying on our experience, the experience of others, and other sources of readily available information. Actual costs may vary over time and could be significantly more, or less, than stated in the Report.

Additional Services

11. GZA recommends that we be retained to provide services during any future: site observations, design, implementation activities, construction and/or property development/redevelopment. This will allow us the opportunity to: i) observe conditions and compliance with our design concepts and opinions; ii) allow for changes in the event that conditions are other than anticipated; iii) provide modifications to our design; and iv) assess the consequences of changes in technologies and/or regulations.

APPENDIX B

SUBSRUFACE EXPLORATION LOGS

TEST BORINGS

LOG KEY

GZA
Geo Environmental, Inc.
Engineers and Scientists

BURMISTER SOIL CLASSIFICATION

COMPONENT	NAME	PROPORTIONAL TERM	PERCENT BY WEIGHT
MAJOR	GRAVEL, SAND, FINES*		>50
Minor	Gravel, Sand, Fines*	and	35 - 50
		some	20-35
		little	10-20
		trace	0-10

*See identification of fines table.

IDENTIFICATION OF FINES

Material	PI	Atterberg Thread Dia.
SILT	0	Cannot Roll
Clayey SILT	1-5	1/4"
SILT & CLAY	5-10	1/8"
CLAY & SILT	10-20	1/16"
Silty CLAY	20-40	1/32"
CLAY	>40	1/64"

GRADATION DESIGNATION	PROPORTION OF COMPONENT
Fine to coarse	All fractions > 10%
Medium to coarse	<10% fine
Fine to medium	<10% coarse
Coarse	<10% fine and medium
Medium	<10% coarse and fine
Fine	<10% coarse and medium

PLASTIC SOILS

Consistency	Blows/Ft. SPT N-Value
Very Soft	< 2
Soft	2 - 4
Medium Stiff	4 - 8
Stiff	8 - 15
Very Stiff	15 - 30
Hard	>30

GRAVEL & SAND

Density	Blows/Ft. SPT N-Value
Very Loose	< 4
Loose	4 - 10
Medium Dense	10 - 30
Dense	30 - 50
Very Dense	> 50

UNIFIED SOIL CLASSIFICATION SYSTEM (USCS) (ASTM D 2487)

MAJOR DIVISIONS			Group Symbols
Coarse Grained Soils More than 50% of material larger than No. 200 sieve.	Gravel More than 50% larger than No. 4 sieve.	Clean Gravels (Little or no fines)	GW GP
		Gravels with Fines (Appreciable amount of fines)	GM GC
	Sand More than 50% smaller than No. 4 sieve.	Clean Sands (Little or no fines)	SW SP
		Sands with Fines (Appreciable amount of fines)	SM SC
Fine Grained Soils More than 50% of material smaller than No. 200 sieve.		Silts and Clays Liquid Limit <50	ML CL
		Silts and CLays Liquid Limit >50	OL MH CH OH
		Highly Organic Soils	Pt

ORGANIC SOIL CLASSIFICATION

Fibrous PEAT (Pt) - Lightweight, spongy, mostly visible organic matter, water squeezes readily from sample. Typically near top of deposit.
Fine Grained PEAT (Pt) - Lightweight, spongy, little visible organic matter, water squeezes readily from sample. Typically below fibrous peat.
Organic Silt (OL) - Typically gray to dark gray, often has strong H2S odor. Typically contains shells or shell fragments. Lightweight. Usually found near coastal regions. May contain wide range of sand fractions.
Organic Clay (OH) - Typically gray to dark gray, high plasticity. Usually found near coastal regions. May contain wide range of sand fractions. Need organic content test for final identification.

ABBREVIATIONS

MR = Mud Rotary
HSA = Hollow Stem Auger
SSA = Solid Stem Auger
SS = Split Spoon Sampler
U = Undisturbed Sample (Shelby Tube)
MC = Modified California Sampler
V = Vibracore
M = Macrocore

USCS = Unified Soil Classification System (ASTM D2487)
NYCBC = New York City Building Code
WOR = Weight of Rods
WOH= Weight of Hammer
SPT = Standard Penetration Test (ASTM D1586)

Tv = Field Vane Shear Test (Torvane) Shear Strength
PP = Pocket Penetrometer Shear Strength
PI = Plasticity Index
Wn = Moisture Content
CO = Consolidation
UC = Unconfined Compression Test
UU = Unconsolidated Undrained (Triaxial) Test
SI = Sieve Analysis
DS = Direct Shear
PID = Photoionization Detector
ppm = Parts Per Million
REC = Recovery
RQD = Rock Quality Designation
▼ = Measured Water Level

N-Value = Cumulative number of uncorrected blows for the middle two six-inch intervals (blows/foot).

TEST BORING LOG

GZA GeoEnvironmental, Inc.
Engineers and Scientists

Jacobs Engineering Group, Inc.
TF Green Wetland Mitigation
Lakeshore Drive Culvert
Warwick, Rhode Island

EXPLORATION NO.: GZ-1
SHEET: 1 of 3
PROJECT NO: 33868.00
REVIEWED BY: William Ladd

Logged By: Adam Michonski
Drilling Co.: New Hampshire Boring
Foreman: Todd Penticost

Type of Rig: ATV
Rig Model: Dietrich D-50
Drilling Method: Cased

Boring Location: See Plan
Ground Surface Elev. (ft.): 16
Final Boring Depth (ft.): 100
Date Start - Finish: 12/10/2012 - 12/11/2012

H. Datum:
V. Datum:

Hammer Type: Safety Hammer
Hammer Weight (lb.): 140
Hammer Fall (in.): 30
Auger or Casing O.D./I.D Dia (in.): 4.5"/4.0"

Sampler Type: SS
Sampler O.D. (in.): 2.0
Sampler Length (in.): 24
Rock Core Size:

Groundwater Depth (ft.)

Date	Time	Water Depth	Stab. Time
12/10/2012	08:00am	3	

Depth (ft)	Casing Blows/ Core Rate	Sample No.	Sample Depth (ft.)	Pen. (in)	Rec. (in)	Blows (per 6 in.)	SPT Value	Sample Description and Identification (Modified Burmister Procedure)	Remark	Field Test Data	Stratum Description Depth (ft.)	Elev. (ft.)
		S-1	0.5-2.5	24	10	15 15 14 14	29	S-1 : 5" PAVEMENT Medium dense, yellow/brown, fine to coarse SAND and fine to coarse GRAVEL, little Silt	1 2		0.4 PAVEMENT	15.6
5		S-2	4-6	24	16	10 10 9 12	19	S-2 : Medium dense, dark brown/black, fine to coarse SAND and fine to coarse GRAVEL, little Silt	3		FILL 7.5	8.5
10		S-3	9-11	24	0	6 4 4 4	8	S-3 : No Recovery			SAND	
		S-4	11-13	24	2	3 3 3 2	6	S-4 : Loose, light gray, fine SAND, trace Silt, trace Wood				
15		S-5	13-15	24	14	4 5 5 5	10	S-5 : Top 4": Light gray, fine SAND, trace Silt Bottom 10": Dark brown, FIBROUS PEAT, trace Wood			14	2.0
		S-6	15-17	24	18	1 1 2 2	3	S-6 : Soft, dark brown, FIBROUS PEAT			PEAT	
		S-7	17-19	24	24	3 3 3 3	6	S-7 : Medium stiff, dark brown, FIBROUS PEAT				
20		S-8	19-21	24	24	1 1 2 3	3	S-8 : Soft, dark brown, FIBROUS PEAT			21	-5.0
		S-9	21-23	24	16	2 2 3 3	5	S-9 : Loose, gray, fine SAND, trace Silt, occasional 1/4-1/2" thick organic clayey silt layers			SAND 23	-7.0
25		S-10	23-25	24	24	1 2 3 2	5	S-10 : Top 12": Dark brown, organic CLAYEY SILT, trace fine Sand Bottom 12': Dark brown, fine to medium SAND, trace Silt			24 ORG. CLAYEY SILT	-8.0
		S-11	25-27	24	20	3 4 10 10	14	S-11 : Medium dense, gray/brown, fine to coarse SAND, little Silt			SAND	
30		S-12	29-31	24	16	8 9 11 12	20	S-12 : Medium dense, light gray, fine to medium SAND, trace Silt				

REMARKS

1 - Ground surface elevation estimated from a plan entitled "Wetland Mitigations Site 2 Boring Location Request" prepared by Jacobs Engineering, Inc.
2 - Borehole advanced with 4 inch casing and rotary wash techniques from 0 to 60 feet below grade. Drilling fluid introduced to borehole at 60 feet below grade. Borehole advanced with open hole from 60 feet below grade to bottom of borehole.
3 - Slight petroleum odor detected in sample S-2.

See Log Key for explanation of sample description and identification procedures. Stratification lines represent approximate boundaries between soil and bedrock types. Actual transitions may be gradual. Water level readings have been made at the times and under the conditions stated. Fluctuations of groundwater may occur due to other factors than those present at the times the measurements were made.

Exploration No.: GZ-1

GZA TEMPLATE TEST BORING W/O EQUIP 2PG; 12/18/2012; 2:40:13 PM

TEST BORING LOG

GZA GeoEnvironmental, Inc.
Engineers and Scientists

Jacobs Engineering Group, Inc.
TF Green Wetland Mitigation
Lakeshore Drive Culvert
Warwick, Rhode Island

EXPLORATION NO.: GZ-1
SHEET: 2 of 3
PROJECT NO: 33868.00
REVIEWED BY: William Ladd

Depth (ft)	Casing Blows/ Core Rate	Sample No.	Sample Depth (ft.)	Sample Pen. (in)	Sample Rec. (in)	Sample Blows (per 6 in.)	Sample SPT Value	Sample Description and Identification (Modified Burmister Procedure)	Remark	Field Test Data	Depth (ft.)	Stratum Description	Elev. (ft.)
35		S-13	34-36	24	18	6 8 10 10	18	S-13 : Medium dense, gray, fine to coarse SAND, little fine to coarse Gravel, trace Silt					
40		S-14	39-41	24	20	8 8 7 8	15	S-14 : Medium dense, gray, fine to coarse SAND, little fine to coarse Gravel, trace Silt					
45		S-15	44-46	24	12	5 6 8 9	14	S-15 : Medium dense, gray, fine to coarse SAND, trace Silt					
50		S-16	49-51	24	4	10 11 12 11	23	S-16 : Medium dense, gray, fine SAND, little Silt				SAND	
55		S-17	54-56	24	18	18 18 21 25	39	S-17 : Dense, gray, fine SAND, little Silt					
60		S-18	59-61	24	14	31 25 28 35	53	S-18 : Very dense, gray, fine SAND, little Silt	4				
65		S-19	64-66	24	12	10 15 10 15	25	S-19 : Dense, light gray/brown, fine SAND, trace Silt					
70		S-20	69-71	24	20	8 8 8 8	16	S-20 : Medium dense, light gray/brown, fine SAND, trace Silt					

REMARKS

4 - Driller indicated approximately 15 feet of sand blow-in inside casing at start of drilling on 12/11/12. Driller washed out and advanced to next sample depth.

See Log Key for explanation of sample description and identification procedures. Stratification lines represent approximate boundaries between soil and bedrock types. Actual transitions may be gradual. Water level readings have been made at the times and under the conditions stated. Fluctuations of groundwater may occur due to other factors than those present at the times the measurements were made.

Exploration No.: GZ-1

GZA TEMPLATE TEST BORING W/O EQUIP 2PG; 12/18/2012; 2:40:13 PM

TEST BORING LOG

GZA GeoEnvironmental, Inc.
Engineers and Scientists

Jacobs Engineering Group, Inc.
TF Green Wetland Mitigation
Lakeshore Drive Culvert
Warwick, Rhode Island

EXPLORATION NO.: GZ-1
SHEET: 3 of 3
PROJECT NO: 33868.00
REVIEWED BY: William Ladd

Depth (ft)	Casing Blows/ Core Rate	Sample No.	Sample Depth (ft.)	Sample Pen. (in)	Sample Rec. (in)	Sample Blows (per 6 in.)	Sample SPT Value	Sample Description and Identification (Modified Burmister Procedure)	Remark	Field Test Data	Stratum Depth (ft.)	Stratum Description	Stratum Elev. (ft.)
75		S-21	74-76	24	16	6 7 7 7	14	S-21 : Medium dense, light gray/brown, fine to medium SAND, trace Silt				SAND	
											78		-62.0
80		S-22	79-81	24	18	12 12 10 11	22	S-22 : Very stiff, gray/dark gray CLAYEY SILT					
85		S-23	84-86	24	16	6 8 8 8	16	S-23 : Very stiff, gray/dark gray CLAYEY SILT					
90		S-24	89-91	24	20	6 7 6 7	13	S-24 : Stiff, dark gray SILT and CLAY				SILT	
95		S-25	94-96	24	20	6 6 5 6	11	S-25 : Stiff, dark gray, SILT and CLAY					
100		S-26	98-100	24	18	5 4 5 4	9	S-26 : Stiff, dark gray, SILT and CLAY					
											100		-84.0
								End of exploration at 100 feet.					
105													
110													

REMARKS

See Log Key for explanation of sample description and identification procedures. Stratification lines represent approximate boundaries between soil and bedrock types. Actual transitions may be gradual. Water level readings have been made at the times and under the conditions stated. Fluctuations of groundwater may occur due to other factors than those present at the times the measurements were made.

Exploration No.: GZ-1

GZA TEMPLATE TEST BORING W/O EQUIP 2PG; 12/18/2012; 2:40:13 PM

TEST BORING LOG

GZA GeoEnvironmental, Inc.
Engineers and Scientists

Jacobs Engineering Group, Inc.
TF Green Wetland Mitigation
Lakeshore Drive Culvert
Warwick, Rhode Island

EXPLORATION NO.: GZ-2
SHEET: 1 of 1
PROJECT NO: 33868.00
REVIEWED BY: William Ladd

Logged By: Adam Michonski
Drilling Co.: New Hampshire Boring
Foreman: Todd Penticost

Type of Rig: ATV
Rig Model: Dietrich D-50
Drilling Method: Cased

Boring Location: See Plan
Ground Surface Elev. (ft.): 15
Final Boring Depth (ft.): 26
Date Start - Finish: 12/12/2012 - 12/12/2012

H. Datum:
V. Datum:

Hammer Type: Safety Hammer
Hammer Weight (lb.): 140
Hammer Fall (in.): 30
Auger or Casing O.D./I.D Dia (in.): 4.5"/4.0"

Sampler Type: SS
Sampler O.D. (in.): 2.0
Sampler Length (in.): 24
Rock Core Size:

Groundwater Depth (ft.)

Date	Time	Water Depth	Stab. Time
12/12/2012	09:30am	2	20 Mins.

Depth (ft)	Casing Blows/ Core Rate	Sample No.	Sample Depth (ft.)	Pen. (in)	Rec. (in)	Blows (per 6 in.)	SPT Value	Sample Description and Identification (Modified Burmister Procedure)	Remark	Field Test Data	Stratum Description	Depth (ft.)	Elev. (ft.)
											PAVEMENT	0.2	14.8
		S-1	0.5-2.5	24	6	14 14 15 28	29	S-1 : 2" PAVEMENT Medium dense, yellow/brown, fine to coarse SAND and fine to coarse GRAVEL, little Silt	1 2		FILL		
5		S-2	4-6	24	2	9 5 7 6	12	S-2 : Medium dense, black/dark brown, fine to coarse SAND and fine GRAVEL, little Silt (large pieces of gravel at tip of spoon) (slight petroleum odor)	3			7	8.0
10		S-3	9-11	24	18	5 3 3 4	6	S-3 : Stiff, dark brown FIBROUS PEAT, trace fine Gravel			PEAT		
15		S-4	14-16	24	24	2 2 2 2	4	S-4 : Soft/medium stiff, dark brown FIBROUS PEAT					
20		S-5	19-21	24	18	4 4 4 4	8	S-5 : Medium stiff/stiff, brown PEAT, trace Organic Fibers (1 inch thick fine sand seam at bottom of spoon)				22.5	-7.5
25		S-6	24-26	24	15	4 5 5 6	10	S-6 : Loose/medium dense, olive/gray, fine SAND, some Silt			SILTY SAND	26	-11.0
								End of exploration at 26 feet.	4				
30													

REMARKS

1 - Ground surface elevation estimated from a plan entitled "Wetland Mitigations Site 2 Boring Location Request" prepared by Jacobs Engineering, Inc.
2 - Borehole advanced using 4 inch casing and rotary wash techniques from 0 to 24 feet below grade.
3 - Change in stratum estimated at depth of approximately 7 feet below grade due to change in wash water.
4 - Borehole backfilled upon completion with soil cuttings and finished with cold patch asphalt at ground surface.

See Log Key for explanation of sample description and identification procedures. Stratification lines represent approximate boundaries between soil and bedrock types. Actual transitions may be gradual. Water level readings have been made at the times and under the conditions stated. Fluctuations of groundwater may occur due to other factors than those present at the times the measurements were made.

Exploration No.: GZ-2

GZA TEMPLATE TEST BORING W/O EQUIP 2PG; 12/18/2012; 2:40:16 PM

TEST BORING LOG

GZA GeoEnvironmental, Inc.
Engineers and Scientists

Jacobs Engineering Group, Inc.
TF Green Wetland Mitigation
Lakeshore Drive Culvert
Warwick, Rhode Island

EXPLORATION NO.: GZ-3
SHEET: 1 of 1
PROJECT NO: 33868.00
REVIEWED BY: William Ladd

Logged By: Adam Michonski
Drilling Co.: New Hampshire Boring
Foreman: Todd Penticost

Type of Rig: ATV
Rig Model: Dietrich D-50
Drilling Method: Cased

Boring Location: See Plan
Ground Surface Elev. (ft.): 15
Final Boring Depth (ft.): 21
Date Start - Finish: 12/12/2012 - 12/12/2012

H. Datum:
V. Datum:

Hammer Type: Safety Hammer
Hammer Weight (lb.): 140
Hammer Fall (in.): 30
Auger or Casing O.D./I.D Dia (in.): 4.5"/4.0"

Sampler Type: SS
Sampler O.D. (in.): 2.0
Sampler Length (in.): 24
Rock Core Size:

Groundwater Depth (ft.)			
Date	Time	Water Depth	Stab. Time
12/12/2012	12:15pm	2	15 Mins.

Depth (ft)	Casing Blows/ Core Rate	Sample No.	Sample Depth (ft.)	Pen. (in)	Rec. (in)	Blows (per 6 in.)	SPT Value	Sample Description and Identification (Modified Burmister Procedure)	Remark	Field Test Data	Stratum Description	Depth (ft.)	Elev. (ft.)
		S-1	0.5-2.5	24	12	10 12 11 10	23	S-1 : 2" PAVEMENT Medium dense, yellow/brown, fine to coarse SAND and fine to coarse GRAVEL, trace Silt	1 2		PAVEMENT	0.2	14.8
5		S-2	4-6	24	14	8 6 6 7	12	S-2 : Medium dense, dark brown/gray, fine to coarse SAND and fine to coarse GRAVEL, little Silt (slight organic/tar odor)	3 4		FILL	7	8.0
10		S-3	9-11	24	16	2 2 1 2	3	S-3 : Soft, dark brown, FIBROUS PEAT (2" thick layer of white/light gray fine SAND at bottom of spoon)			PEAT		
15		S-4	14-16	24	20	1 1 2 1	3	S-4 : Soft, dark brown, FIBROUS PEAT				18	-3.0
20		S-5	19-21	24	10	2 3 3 3	6	S-5 : Loose, brown, fine to medium SAND, little Silt (slight organic odor)	5		SAND	21	-6.0
								End of exploration at 21 feet.					
25													
30													

REMARKS

1 - Ground surface elevation estimated from a plan entitled "Wetland Mitigations Site 2 Boring Location Request" prepared by Jacobs Engineering, Inc.
2 - Borehole advanced using 4 inch casing and rotary wash techniques from 0 to 19 feet below grade.
3 - Roller bit grinding on obstruction (possible cobbles) from approximately 2.5 to 7.5 feet below grade.
4 - Change in stratum estimated at depth of approximately 7 feet below grade due to change in color of wash water.
5 - Borehole backfilled upon completion with soil cuttings and finished with cold patch asphalt at ground surface.

See Log Key for explanation of sample description and identification procedures. Stratification lines represent approximate boundaries between soil and bedrock types. Actual transitions may be gradual. Water level readings have been made at the times and under the conditions stated. Fluctuations of groundwater may occur due to other factors than those present at the times the measurements were made.

Exploration No.: GZ-3

GZA TEMPLATE TEST BORING W/O EQUIP 2PG; 12/18/2012; 2:40:18 PM

TEST BORING LOG

GZA GeoEnvironmental, Inc.
Engineers and Scientists

Jacobs Engineering Group, Inc.
TF Green Wetland Mitigation
Lakeshore Drive Culvert
Warwick, Rhode Island

EXPLORATION NO.: GZ-4
SHEET: 1 of 1
PROJECT NO: 33868.00
REVIEWED BY: William Ladd

Logged By: Adam Michonski
Drilling Co.: New Hampshire Boring
Foreman: Todd Penticost

Type of Rig: ATV
Rig Model: Dietrich D-50
Drilling Method: Cased

Boring Location: See Plan
Ground Surface Elev. (ft.): 16
Final Boring Depth (ft.): 31
Date Start - Finish: 12/12/2012 - 12/12/2012

H. Datum:
V. Datum:

Hammer Type: Safety Hammer
Hammer Weight (lb.): 140
Hammer Fall (in.): 30
Auger or Casing O.D./I.D Dia (in.): 4.5"/4.0"

Sampler Type: SS
Sampler O.D. (in.): 2.0
Sampler Length (in.): 24
Rock Core Size:

Groundwater Depth (ft.)			
Date	Time	Water Depth	Stab. Time
12/12/2012	14:00pm	2.5	15 Mins.

Depth (ft)	Casing Blows/ Core Rate	Sample No.	Sample Depth (ft.)	Pen. (in)	Rec. (in)	Blows (per 6 in.)	SPT Value	Sample Description and Identification (Modified Burmister Procedure)	Remark	Field Test Data	Stratum Description	Depth (ft.)	Elev. (ft.)
		S-1	0.5-2.5	24	12	10 19 21 19	40	S-1 : 5" PAVEMENT Dense, Yellow/brown, fine to coarse SAND and fine to coarse GRAVEL, trace Silt	1 2		PAVEMENT	0.4	15.6
5		S-2	4-6	24	14	10 10 11 19	21	S-2 : Medium dense, dark gray/black, fine to coarse SAND and fine to coarse GRAVEL, little Silt (strong tar odor)	3		FILL	7.5	8.5
10		S-3	9-11	24	16	9 19 22 16	41	S-3 : Dense, dark gray/olive, fine to coarse SAND and fine to coarse GRAVEL, little Silt	4		SAND AND GRAVEL	14.3	1.7
15		S-4	14-16	24	24	2 1 3 3	4	S-4 : Top 4": Gray/brown, fine to medium SAND, trace Organic Fibers Bottom 20": Dark brown, FIBROUS PEAT			PEAT	25.7	-9.7
20		S-5	19-21	24	24	2 2 2 3	4	S-5 : Soft/medium stiff, brown, FIBROUS PEAT					
25		S-6	24-26	24	24	1 2 2 2	4	S-6 : Top 20": Soft/medium stiff, brown, FIBROUS PEAT Bottom 4": Dark brown/dark gray, ORGANIC CLAYEY SILT			ORG. CLAYEY SILT	27.5	-11.5
30		S-7	29-31	24	12	3 3		S-7 : Loose, dark brown/gray, fine to medium SAND, trace Silt (slight organic odor)	5		SAND	31	-15.0
								End of exploration at 31 feet.					

REMARKS

1 - Ground surface elevation estimated from a plan entitled "Wetland Mitigations Site 2 Boring Location Request" prepared by Jacobs Engineering, Inc.
2 - Borehole advanced using 4 inch casing and rotary wash techniques from 0 to 29 feet below grade.
3 - Oily sheen observed in wash water from approximately 4 to 7 feet below grade.
4 - Roller bit grinding from 6 to 12 feet below grade.
5 - Borehole backfilled upon completion with soil cuttings and finished with cold patch asphalt at ground surface.

See Log Key for explanation of sample description and identification procedures. Stratification lines represent approximate boundaries between soil and bedrock types. Actual transitions may be gradual. Water level readings have been made at the times and under the conditions stated. Fluctuations of groundwater may occur due to other factors than those present at the times the measurements were made.

Exploration No.: GZ-4

GZA TEMPLATE TEST BORING W/O EQUIP 2PG; 12/18/2012; 2:40:20 PM

TEST PITS

GZA GeoEnvironmental, Inc.		Test Pit No.	. TP-1
Engineers/Scientists	TF Green Wetland Mitigation Project	Page No.	1 of 1
	Warwick, RI	File No.	33868
530 Broadway		Checked By:	WLL
Providence, Rhode Island 02909			

Excavation Equipment

GZA Rep.	Adam Michonski	Contractor	RIAC			Date	12/13/2012
		Operator	Stephen			Ground Elev.	161'
Weather	Cool, Clear, 40's	Make	JCB	Model	215S	Time Started	1040
		Capacity		Reach	ft.	Time Completed	1115

Depth	Soil Description	Sample No.	PID Reading (ppm)	Excav. Effort	Boulders: Count/ Class	Note No.
0	Dark gray/brown, fine to course SAND and fine to coarse GRAVEL, little Silt (FILL)	S-1		M	0	
1'		S-2				
2'	2.0'+ Dark-brown fine to medium SAND and SILT, trace roots/organics (Buried Topsoil)			M	0	
	2.5'± Brown, fine SAND, trace Silt (East Face of Test Pit)			M	0	1
3'	Gray-brown, fine to coarse SAND, some fine to coarse Gravel, trace Silt, trace wood/organics (FILL)					
	3.5'± Dark-brown fine to medium SAND and SILT, trace roots/organics (Buried Topsoil) (West Face of Test Pit)			M	0	2
4'						
5'						
6'	Bottom of Test Pit at 4.0 feet.					
7'						
8'						
9'						
10'						
11'						
12'						
13'						
14'						
15'						
16'						

Notes:

1. Slight groundwater seepage encounterd at approximatly 2.5 feet below grade.
2. Test pit backfilled upon completion.

Test Pit Plan

6'

3'

NORTH

Volume = 2.3 cu. yd.

Boulder Class

Letter Designation	Size Range Classification
A	6" - 17"
B	18" - 36"
C	36" and Larger

Excavation Effort
E-----Easy
M-----Moderate
D-----Difficult

Proportions Used

TRACE (TR.)	0 - 10%
LITTLE (LI.)	10 - 20%
SOME (SO.)	20 - 35%
AND	35 - 50%

Abbreviations
F = Fine
M = Medium
C = Coarse
V = Very
F/M = Fine to medium
F/C = Fine to coarse
GR = Gray
BN = Brown
YEL = Yellow

GROUNDWATER
(X) Encountered
( ) Not Encountered

Elapsed Time to Reading (Hours)	Depth to Ground-water

GZA GeoEnvironmental, Inc.

GZA GeoEnvironmental, Inc.		Test Pit No.	. TP-2
Engineers/Scientists	TF Green Wetland Mitigation Project	Page No.	1 of 1
	Warwick, RI	File No.	33868
530 Broadway		Checked By:	WLL
Providence, Rhode Island 02909			

Excavation Equipment

GZA Rep.	Adam Michonski	Contractor	RIAC	Date	12/13/2012
		Operator	Stephen	Ground Elev.	17'
Weather	Cool, Clear, 40's	Make	JCB	Model	215S	Time Started	1022
		Capacity		Reach	ft.	Time Completed	1035

Depth	Soil Description	Sample No.	PID Reading (ppm)	Excav. Effort	Boulders: Count/ Class	Note No.
0	Gray-brown, fine to coarse SAND and fine to coarse GRAVEL, little Silt, trace roots/organics (FILL)	S-1		M	0	
1.0'±						
1'				E	0	
2'	Brown-gray, fine to coarse SAND, some fine to coarse Gravel, trace silt (FILL)	S-2		E	0	1
3'				E	0	2
3.5'±						
4'	Bottom of Test Pit at 3.5 feet.					
5'						
6'						
7'						
8'						
9'						
10'						
11'						
12'						
13'						
14'						
15'						
16'						

Notes:

1. Slight groundwater seepage encounterd at approximatly 3 feet below grade.
2. Test pit backfilled upon completion.

Test Pit Plan

5'

3'

NORTH

Volume = 1.9 cu. yd.

Boulder Class

Letter Designation	Size Range Classification
A	6" - 17"
B	18" - 36"
C	36" and Larger

Excavation Effort
E-----Easy
M-----Moderate
D-----Difficult

Proportions Used

TRACE (TR.)	0 - 10%
LITTLE (LI.)	10 - 20%
SOME (SO.)	20 - 35%
AND	35 - 50%

Abbreviations
F = Fine
M = Medium
C = Coarse
V = Very
F/M = Fine to medium
F/C = Fine to coarse
GR = Gray
BN = Brown
YEL = Yellow

GROUNDWATER
(X) Encountered
( ) Not Encountered

Elapsed Time to Reading (Hours)	Depth to Ground-water

GZA GeoEnvironmental, Inc.

GZA GeoEnvironmental, Inc.		Test Pit No.	. TP-3
Engineers/Scientists	TF Green Wetland Mitigation Project	Page No.	1 of 1
	Warwick, RI	File No.	33868
530 Broadway		Checked By:	WLL
Providence, Rhode Island 02909			

Excavation Equipment

GZA Rep.	Adam Michonski	Contractor	RIAC	Date	12/13/2012
		Operator	Stephen	Ground Elev.	16'
Weather	Cool, Clear, 40's	Make	JCB	Model	215S	Time Started	955
		Capacity		Reach	ft.	Time Completed	1008

Depth	Soil Description	Sample No.	PID Reading (ppm)	Excav. Effort	Boulders: Count/ Class	Note No.
0	0.3'± Dark brown, fine to medium SAND, some Silt, trace roots/organic matter (Topsoil)					
	1.0'± Gray-brown, fine to coarse SAND, some fine to coarse GRAVEL, little Silt (FILL)	S-1		E	0	
1'	Dark gray, fine to coarse SAND and fine to coarse GRAVEL, some Silt (FILL)	S-2		M	0	
2'	2.5'±					
	3.0'± Dark-brown fine to medium SAND and SILT, trace roots/organics (Buried Topsoil)			M	0	1
3'	Brown, fine to medium Sand, some Silt, little fine to medium Gravel					
	4.0'±			E	0	2
4'						
5'						
6'	Bottom of Test Pit at 4 feet.					
7'						
8'						
9'						
10'						
11'						
12'						
13'						
14'						
15'						
16'						

Notes:

1. Slight groundwater seepage encounterd at approximatly 2.5 feet below grade.
2. Test pit backfilled upon completion.

Test Pit Plan

5'

3'

NORTH

Volume = 2.2 cu. yd.

Boulder Class

Letter Designation	Size Range Classification
A	6" - 17"
B	18" - 36"
C	36" and Larger

Excavation Effort
E-----Easy
M-----Moderate
D-----Difficult

Proportions Used

TRACE (TR.)	0 - 10%
LITTLE (LI.)	10 - 20%
SOME (SO.)	20 - 35%
AND	35 - 50%

Abbreviations
F = Fine
M = Medium
C = Coarse
V = Very
F/M = Fine to medium
F/C = Fine to coarse
GR = Gray
BN = Brown
YEL = Yellow

GROUNDWATER
(X) Encountered
( ) Not Encountered

Elapsed Time to Reading (Hours)	Depth to Ground-water

GZA GeoEnvironmental, Inc.

GZA GeoEnvironmental, Inc.		Test Pit No.	. TP-4
Engineers/Scientists	TF Green Wetland Mitigation Project	Page No.	1 of 1
	Warwick, RI	File No.	33868
530 Broadway		Checked By:	WLL
Providence, Rhode Island 02909			

Excavation Equipment

GZA Rep.	Adam Michonski	Contractor	RIAC			Date	12/13/2012
		Operator	Stephen			Ground Elev.	18'
Weather	Cool, Clear, 40's	Make	JCB	Model	215S	Time Started	928
		Capacity		Reach	ft.	Time Completed	945

Depth	Soil Description	Sample No.	PID Reading (ppm)	Excav. Effort	Boulders: Count/ Class	Note No.
0	0.5'± Dark brown, fine to medium SAND, some Silt, trace roots/organic matter (Topsoil/Forest Mat)			E	0	
1'				E	0	
2'	Gray-brown, fine to coarse SAND, some fine to coarse GRAVEL, trace Silt (FILL)	S-1		E	0	
3'	3.5'±			E	0	1
4'	4.0'± Dark-brown fine to medium SAND and SILT, trace roots/organics (Buried Topsoil)					
	Brown, fine to medium Sand, some Silt, little fine to medium Gravel					2
5'						
6'	Bottom of Test Pit at 4.5 feet.					
7'						
8'						
9'						
10'						
11'						
12'						
13'						
14'						
15'						
16'						

Notes:

1. Slight groundwater seepage encounterd at approximatly 3.5 feet below grade.
2. Test pit backfilled upon completion.

Test Pit Plan

5'

3'

NORTH

Volume = 2.5 cu. yd.

Boulder Class

Letter Designation	Size Range Classification
A	6" - 17"
B	18" - 36"
C	36" and Larger

Excavation Effort
E-----Easy
M-----Moderate
D-----Difficult

Proportions Used

TRACE (TR.)	0 - 10%
LITTLE (LI.)	10 - 20%
SOME (SO.)	20 - 35%
AND	35 - 50%

Abbreviations
F = Fine
M = Medium
C = Coarse
V = Very
F/M = Fine to medium
F/C = Fine to coarse
GR = Gray
BN = Brown
YEL = Yellow

GROUNDWATER
(X) Encountered
( ) Not Encountered

Elapsed Time to Reading (Hours)	Depth to Ground-water

GZA GeoEnvironmental, Inc.

APPENDIX C

GEOTECHNICAL LABORATORY TEST RESULTS

LABORATORY TESTING DATA SHEET

Project Name	T.F. Green Wetland Mitigation	Project Location	Warwick, RI
Project No.	03.0033868.00	Report Date	12/20/2012
Project Engineer	William Ladd	Date Reviewed	12/20/2012
Assigned By	William Ladd	Reviewed By	

Boring/ Test Pit No.	Sample No.	Depth ft.	Lab No.	Identification Tests							Laboratory Log and Soil Description
				Water Content %	LL %	PL %	Sieve -200 %	Hyd -2µ %	Gs	ORG %	
TP-1	S-1	0-2	1				13				Brown f-c SAND and f-c GRAVEL, little Silt
TP-1	S-2	1-3.5	2				8				Brown f-c SAND, some f-c Gravel, trace Silt
TP-2	S-1	0-1	3				9				Brown f-c SAND, trace fine Gravel, trace Silt
TP-2	S-2	1-3.5	4				7				Brown f-c SAND, little f-c Gravel, trace Silt
TP-3	S-1	0.3-1	5				9				Brown f-c SAND, trace Silt, trace Gravel
TP-3	S-2	1-2.5	6				13				Dark brown f-c SAND, some f-c Gravel, little Silt
TP-4	S-1	0.5-3.5	7				6				Light brown f-c SAND, little f-c Gravel, trace Silt

THIELSCH ENGINEERING

195 Frances Avenue
Cranston, RI 02901

U.S. STANDARD SIEVE AND HYDROMETER

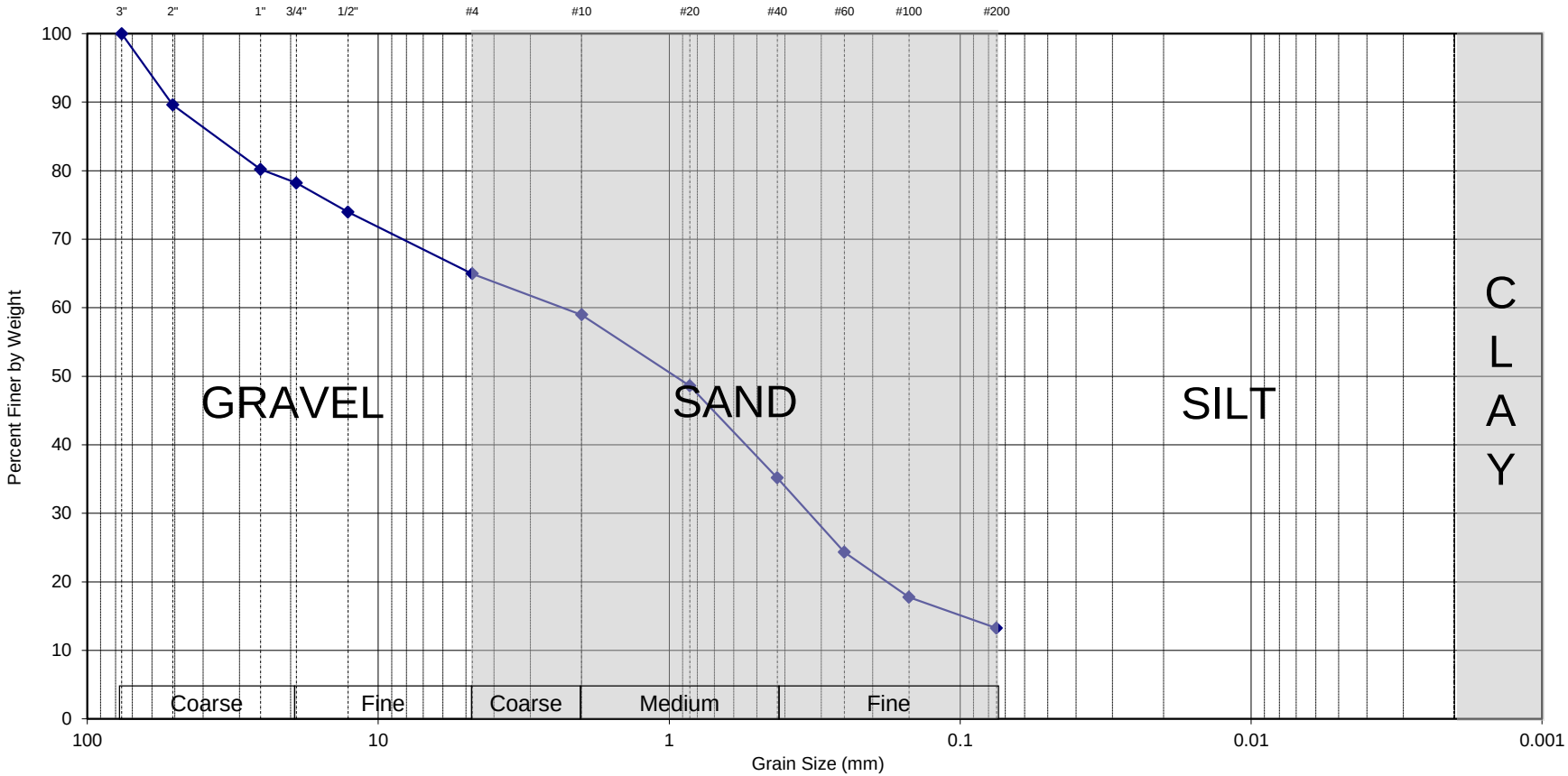

Gravel	Sand	Fines
35.0%	51.7%	13.3%

Lab #	Exploration	Sample	Depth	Description	WC	LL	PL	PI
1	TP-1	S-1	0-2'	Brown f-c SAND and f-c GRAVEL, little Silt				

Sieve Size	% Passing
¾"	78.2
½"	74.0
#4	65.0
#10	59.0
#20	48.6
#40	35.2
#60	24.4
#100	17.8
#200	13.3

THIELSCH ENGINEERING

CTS-74-12-0003.05
T.F. Green Wetland Mitigation
Warwick, RI
Project # 03.0033868.00

Tested by: GG/MS Date: 12/19/12
Reviewed by: MBP Date: 12/20/12

U.S. STANDARD SIEVE AND HYDROMETER

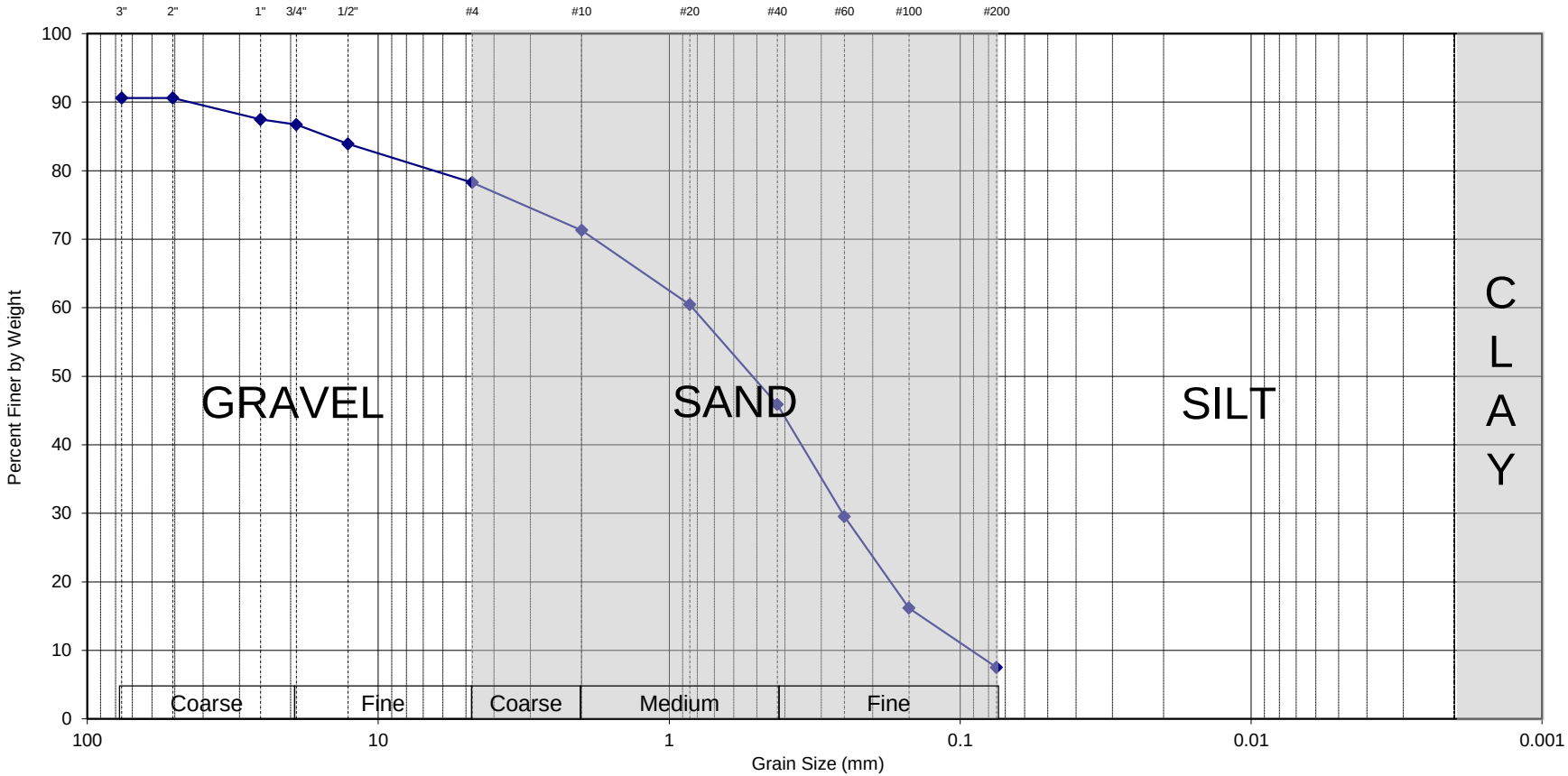

Gravel	Sand	Fines
21.7%	70.8%	7.5%

Lab #	Exploration	Sample	Depth	Description	WC	LL	PL	PI
2	TP-1	S-2	1-3.5'	Brown f-c SAND, some f-c Gravel, trace Silt				

Sieve Size	% Passing
¾"	86.7
½"	83.9
#4	78.3
#10	71.3
#20	60.4
#40	45.9
#60	29.5
#100	16.2
#200	7.5

THIELSCH ENGINEERING

CTS-74-12-0003.05
T.F. Green Wetland Mitigation
Warwick, RI
Project # 03.0033868.00

Tested by: GG/MS Date: 12/19/12
Reviewed by: MBP Date: 12/20/12

U.S. STANDARD SIEVE AND HYDROMETER

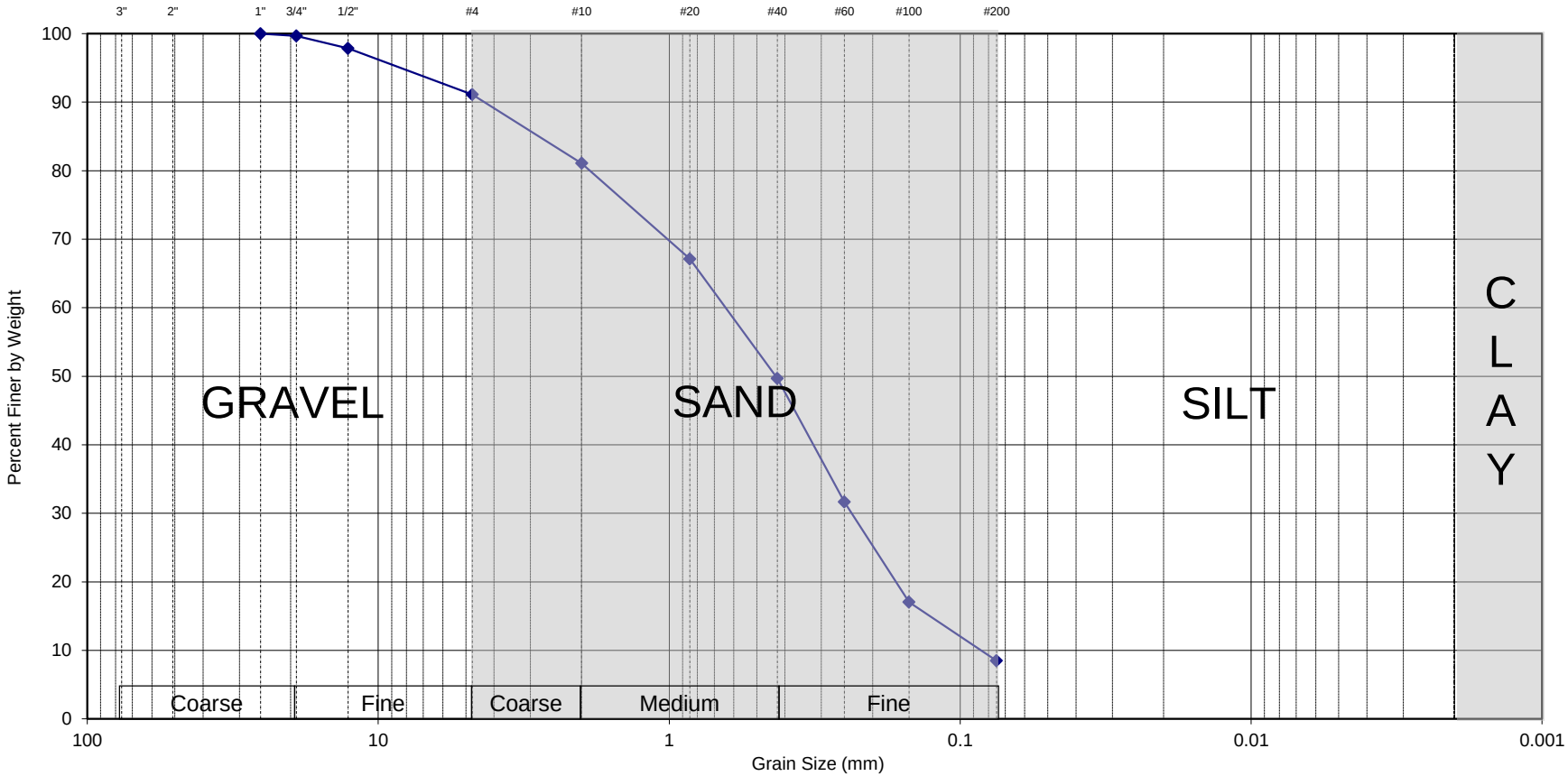

Gravel	Sand	Fines
8.9%	82.7%	8.5%

Lab #	Exploration	Sample	Depth	Description	WC	LL	PL	PI
3	TP-2	S-1	0-1'	Brown f-c SAND, trace fine Gravel, trace Silt				

Sieve Size	% Passing
¾"	99.7
½"	97.9
#4	91.1
#10	81.1
#20	67.1
#40	49.7
#60	31.7
#100	17.0
#200	8.5

THIELSCH ENGINEERING

CTS-74-12-0003.05
T.F. Green Wetland Mitigation
Warwick, RI
Project # 03.0033868.00

Tested by: GG/MS Date: 12/19/12
Reviewed by: MBP Date: 12/20/12

U.S. STANDARD SIEVE AND HYDROMETER

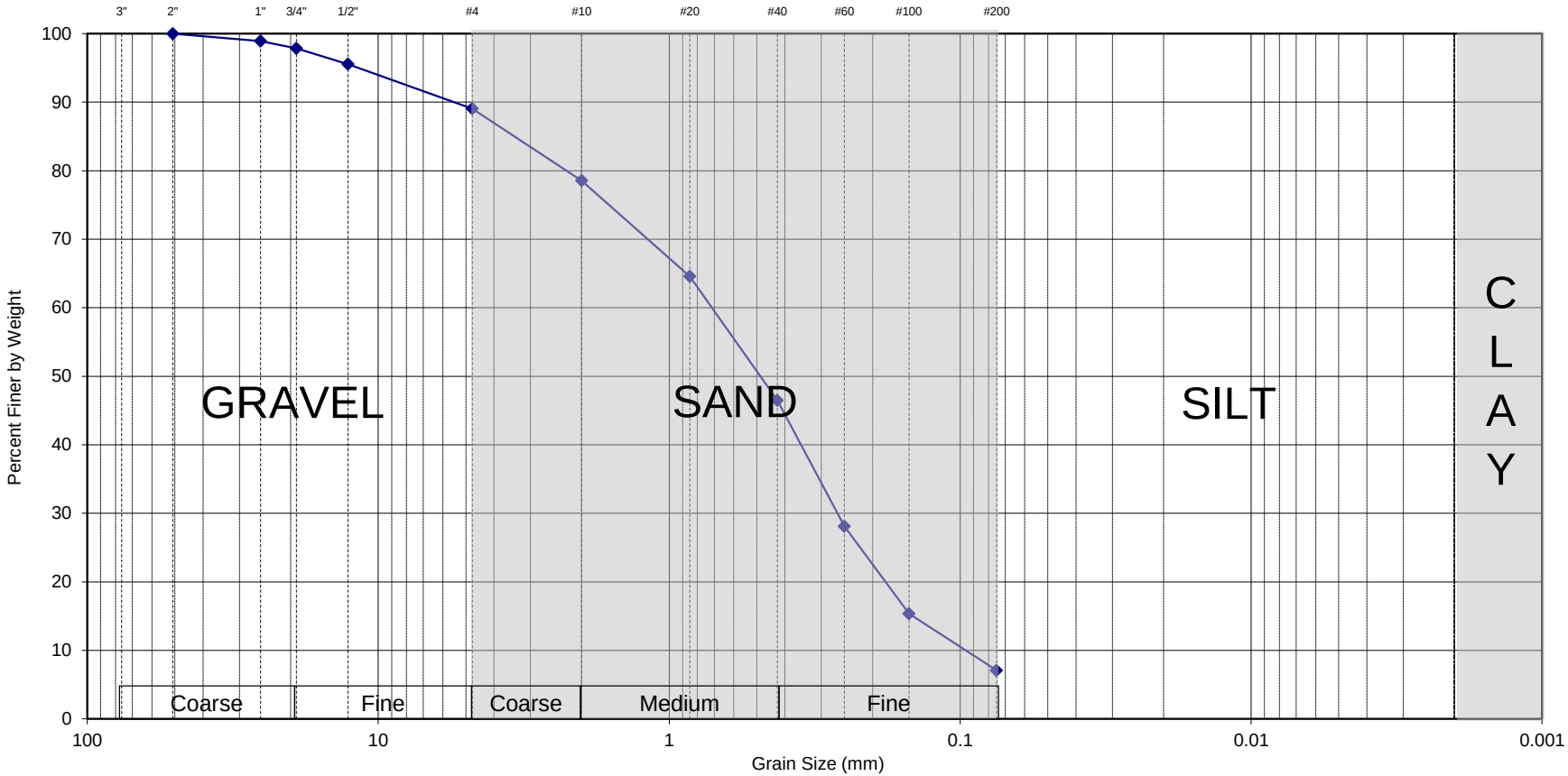

Gravel	Sand	Fines
10.9%	82.0%	7.1%

Lab #	Exploration	Sample	Depth	Description	WC	LL	PL	PI
4	TP-2	S-2	1-3.5'	Brown f-c SAND, little f-c Gravel, trace Silt				

Sieve Size	% Passing
¾"	97.9
½"	95.5
#4	89.1
#10	78.6
#20	64.6
#40	46.5
#60	28.1
#100	15.3
#200	7.1

THIELSCH ENGINEERING

CTS-74-12-0003.05
T.F. Green Wetland Mitigation
Warwick, RI
Project # 03.0033868.00

Tested by: GG/MS Date: 12/19/12
Reviewed by: MBP Date: 12/20/12

U.S. STANDARD SIEVE AND HYDROMETER

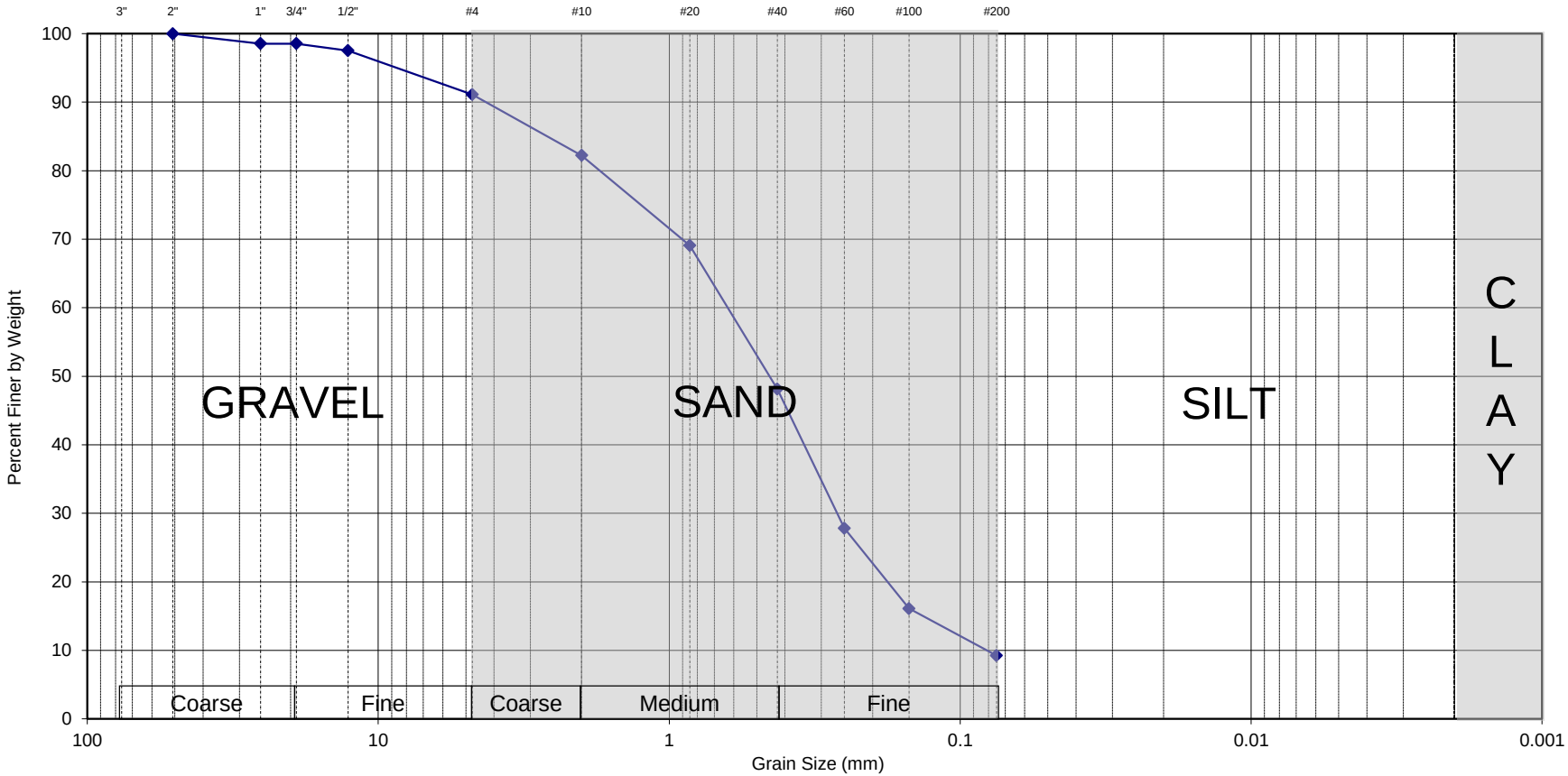

Gravel	Sand	Fines
8.9%	81.9%	9.3%

Lab #	Exploration	Sample	Depth	Description	WC	LL	PL	PI
5	TP-3	S-1	0.3-1'	Brown f-c SAND, trace Silt, trace Gravel				

Sieve Size	% Passing
¾"	98.5
½"	97.5
#4	91.1
#10	82.2
#20	69.1
#40	48.2
#60	27.8
#100	16.1
#200	9.3

THIELSCH ENGINEERING

CTS-74-12-0003.05
T.F. Green Wetland Mitigation
Warwick, RI
Project # 03.0033868.00

Tested by: GG/MS Date: 12/19/12
Reviewed by: MBP Date: 12/20/12

U.S. STANDARD SIEVE AND HYDROMETER

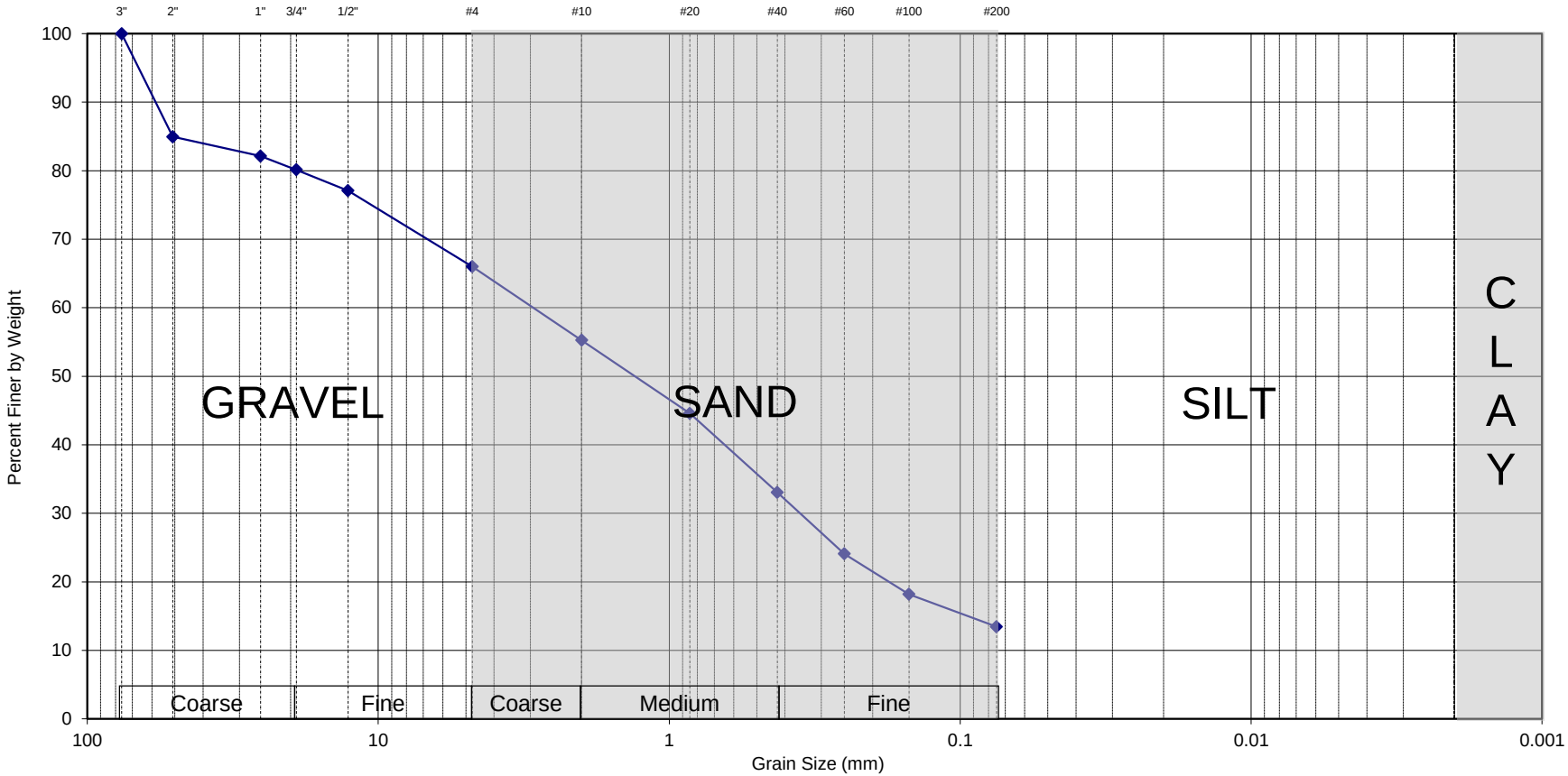

Gravel	Sand	Fines
34.0%	52.5%	13.4%

Lab #	Exploration	Sample	Depth	Description	WC	LL	PL	PI
6	TP-3	S-2	1-2.5'	Dark brown f-c SAND, some f-c Gravel, little Silt				

Sieve Size	% Passing
¾"	80.1
½"	77.1
#4	66.0
#10	55.3
#20	44.6
#40	33.0
#60	24.1
#100	18.2
#200	13.4

THIELSCH ENGINEERING

CTS-74-12-0003.05
T.F. Green Wetland Mitigation
Warwick, RI
Project # 03.0033868.00

Tested by: GG/MS Date: 12/19/12
Reviewed by: MBP Date: 12/20/12

U.S. STANDARD SIEVE AND HYDROMETER

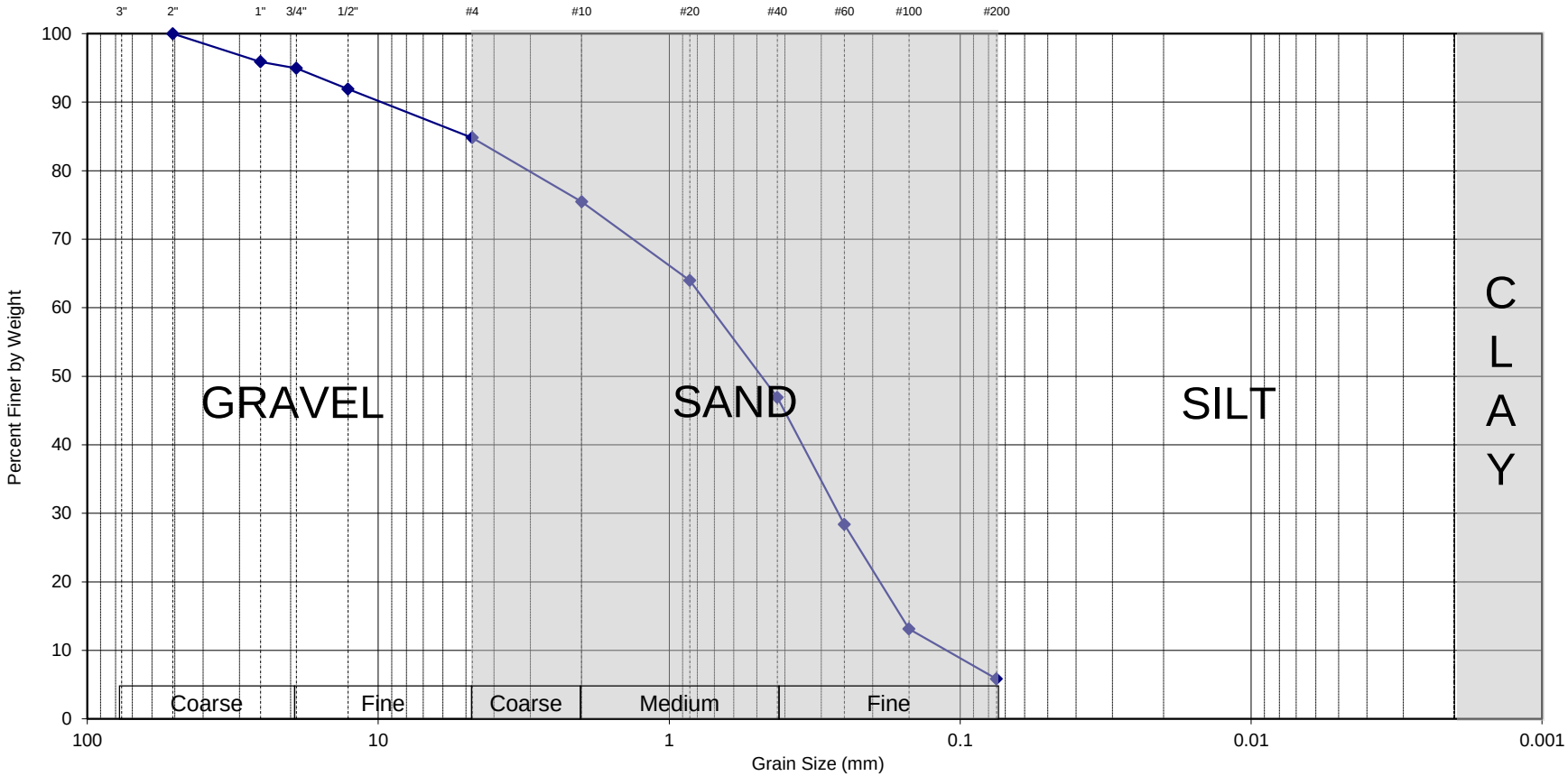

Gravel	Sand	Fines
15.2%	79.0%	5.8%

Lab #	Exploration	Sample	Depth	Description	WC	LL	PL	PI
7	TP-4	S-1	0.5-3.5'	Light brown f-c SAND, little f-c Gravel, trace Silt				

Sieve Size	% Passing
¾"	95.0
½"	91.9
#4	84.8
#10	75.5
#20	64.0
#40	46.9
#60	28.4
#100	13.1
#200	5.8

THIELSCH ENGINEERING

CTS-74-12-0003.05
T.F. Green Wetland Mitigation
Warwick, RI
Project # 03.0033868.00

Tested by: GG/MS Date: 12/19/12
Reviewed by: MBP Date: 12/20/12

APPENDIX D

ENVIRONMENTAL LABORATORY TEST RESULTS

R.I. ANALYTICAL
Specialists in Environmental Services

CERTIFICATE OF ANALYSIS

GZA / Geoenvironmental, Inc.
Attn: Mr. William Ladd
530 Broadway
Providence, RI 02909

Date Received: 12/13/12
Date Reported: 12/21/12
P.O. #:
Work Order #: 1212-26108

DESCRIPTION: GZA FILE# 33868 TF GREEN WETLAND MITIGATION WARWICK, RI

Subject sample(s) has/have been analyzed by our Warwick, R.I. laboratory with the attached results.

Reference: All parameters were analyzed by U.S. EPA approved methodologies.
The specific methodologies are listed in the methods column of the Certificate Of Analysis.

Data qualifiers (if present) are explained in full at the end of a given sample's analytical results.
The Certificate of Analysis shall not be reproduced except in full, without written approval of R. I. Analytical.
Results relate only to samples submitted to the laboratory for analysis.
Test results are not blank corrected.

Certification #: RI-033, MA-RI015, CT-PH-0508, ME-RI015
NH-253700 A & B, USDA S-41844

This Certificate represents all data associated with the referenced work order and is paginated for completeness. The complete Certificate includes one attachment; the original Chain of Custody.

If you have any questions regarding this work, or if we may be of further assistance, please contact our customer service department.

Approved by:

Sharon Baker
MIS / Data Reporting Manager

enc: Chain of Custody

R.I. Analytical Laboratories, Inc.
CERTIFICATE OF ANALYSIS

GZA / Geoenvironmental, Inc.

Date Received: 12/13/12
Work Order #: 1212-26108
GZA FILE# 33868 TF GREEN WETLAND MITIGATION WARWICK, RI

Sample # 001
SAMPLE DESCRIPTION: GZ-1, S-2, 4-6'
SAMPLE TYPE: GRAB **SAMPLE DATE/TIME:** 12/10/2012 @ 09:00

PARAMETER	SAMPLE RESULTS	DET. LIMIT	UNITS	METHOD	DATE ANALYZED	ANALYST
TPH						
TPH GC/FID	47	11	mg/kg dry	SW846 8100M	12/20/12	TCL
Moisture	10		%	SM2540 G.	12/14/12	KD
Volatile Organic Compounds						
Benzene	<0.06	0.06	mg/kg dry	5035/8260B	12/14/12	KAC
Bromobenzene	<0.06	0.06	mg/kg dry	5035/8260B	12/14/12	KAC
Bromochloromethane	<0.06	0.06	mg/kg dry	5035/8260B	12/14/12	KAC
Bromodichloromethane	<0.06	0.06	mg/kg dry	5035/8260B	12/14/12	KAC
Bromoform	<0.06	0.06	mg/kg dry	5035/8260B	12/14/12	KAC
Bromomethane	<0.28	0.28	mg/kg dry	5035/8260B	12/14/12	KAC
n-Butylbenzene	<0.06	0.06	mg/kg dry	5035/8260B	12/14/12	KAC
Sec-butylbenzene	<0.06	0.06	mg/kg dry	5035/8260B	12/14/12	KAC
tert-Butylbenzene	<0.06	0.06	mg/kg dry	5035/8260B	12/14/12	KAC
Carbon Tetrachloride	<0.06	0.06	mg/kg dry	5035/8260B	12/14/12	KAC
Chlorobenzene	<0.06	0.06	mg/kg dry	5035/8260B	12/14/12	KAC
Chloroethane	<0.28	0.28	mg/kg dry	5035/8260B	12/14/12	KAC
Chloroform	<0.06	0.06	mg/kg dry	5035/8260B	12/14/12	KAC
Chloromethane	<0.28	0.28	mg/kg dry	5035/8260B	12/14/12	KAC
2-Chlorotoluene	<0.06	0.06	mg/kg dry	5035/8260B	12/14/12	KAC
4-Chlorotoluene	<0.06	0.06	mg/kg dry	5035/8260B	12/14/12	KAC
Dibromochloromethane	<0.06	0.06	mg/kg dry	5035/8260B	12/14/12	KAC
1,2-Dibromo-3-Chloropropane	<0.11	0.11	mg/kg dry	5035/8260B	12/14/12	KAC
1,2-Dibromoethane(EDB)	<0.06	0.06	mg/kg dry	5035/8260B	12/14/12	KAC
Dibromomethane	<0.11	0.11	mg/kg dry	5035/8260B	12/14/12	KAC
1,2-Dichlorobenzene	<0.06	0.06	mg/kg dry	5035/8260B	12/14/12	KAC
1,3-Dichlorobenzene	<0.06	0.06	mg/kg dry	5035/8260B	12/14/12	KAC
1,4-Dichlorobenzene	<0.06	0.06	mg/kg dry	5035/8260B	12/14/12	KAC
Dichlorodifluoromethane	<0.28	0.28	mg/kg dry	5035/8260B	12/14/12	KAC
1,1-Dichloroethane	<0.06	0.06	mg/kg dry	5035/8260B	12/14/12	KAC
1,2-Dichloroethane	<0.06	0.06	mg/kg dry	5035/8260B	12/14/12	KAC
1,1-Dichloroethene	<0.06	0.06	mg/kg dry	5035/8260B	12/14/12	KAC
cis-1,2-Dichloroethene	<0.06	0.06	mg/kg dry	5035/8260B	12/14/12	KAC
trans-1,2-Dichloroethylene	<0.06	0.06	mg/kg dry	5035/8260B	12/14/12	KAC
1,2-Dichloropropane	<0.06	0.06	mg/kg dry	5035/8260B	12/14/12	KAC
1,3-Dichloropropane	<0.06	0.06	mg/kg dry	5035/8260B	12/14/12	KAC

R.I. Analytical Laboratories, Inc.
CERTIFICATE OF ANALYSIS

GZA / Geoenvironmental, Inc.

Date Received: 12/13/12
Work Order #: 1212-26108
GZA FILE# 33868 TF GREEN WETLAND MITIGATION WARWICK, RI

Sample # 001
SAMPLE DESCRIPTION: GZ-1, S-2, 4-6'
SAMPLE TYPE: GRAB **SAMPLE DATE/TIME:** 12/10/2012 @ 09:00

PARAMETER	SAMPLE RESULTS	DET. LIMIT	UNITS	METHOD	DATE ANALYZED	ANALYST
2,2-Dichloropropane	<0.06	0.06	mg/kg dry	5035/8260B	12/14/12	KAC
1,1-Dichloropropene	<0.06	0.06	mg/kg dry	5035/8260B	12/14/12	KAC
Ethylbenzene	<0.06	0.06	mg/kg dry	5035/8260B	12/14/12	KAC
Hexachlorobutadiene	<0.06	0.06	mg/kg dry	5035/8260B	12/14/12	KAC
Isopropylbenzene	<0.06	0.06	mg/kg dry	5035/8260B	12/14/12	KAC
p-Isopropyltoluene	<0.06	0.06	mg/kg dry	5035/8260B	12/14/12	KAC
Methylene Chloride	<0.06	0.06	mg/kg dry	5035/8260B	12/14/12	KAC
n-Propylbenzene	<0.06	0.06	mg/kg dry	5035/8260B	12/14/12	KAC
Naphthalene	<0.06	0.06	mg/kg dry	5035/8260B	12/14/12	KAC
Styrene	<0.06	0.06	mg/kg dry	5035/8260B	12/14/12	KAC
1,1,1,2-Tetrachloroethane	<0.06	0.06	mg/kg dry	5035/8260B	12/14/12	KAC
1,1,2,2-Tetrachloroethane	<0.06	0.06	mg/kg dry	5035/8260B	12/14/12	KAC
Tetrachloroethene	<0.06	0.06	mg/kg dry	5035/8260B	12/14/12	KAC
Toluene	<0.06	0.06	mg/kg dry	5035/8260B	12/14/12	KAC
1,2,3-Trichlorobenzene	<0.06	0.06	mg/kg dry	5035/8260B	12/14/12	KAC
1,2,4-Trichlorobenzene	<0.06	0.06	mg/kg dry	5035/8260B	12/14/12	KAC
1,1,1-Trichloroethane	<0.06	0.06	mg/kg dry	5035/8260B	12/14/12	KAC
1,1,2-Trichloroethane	<0.06	0.06	mg/kg dry	5035/8260B	12/14/12	KAC
Trichloroethene	<0.06	0.06	mg/kg dry	5035/8260B	12/14/12	KAC
Trichlorofluoromethane	<0.06	0.06	mg/kg dry	5035/8260B	12/14/12	KAC
1,2,3-Trichloropropane	<0.06	0.06	mg/kg dry	5035/8260B	12/14/12	KAC
1,2,4-Trimethylbenzene	<0.06	0.06	mg/kg dry	5035/8260B	12/14/12	KAC
1,3,5-Trimethylbenzene	<0.06	0.06	mg/kg dry	5035/8260B	12/14/12	KAC
Vinyl Chloride	<0.06	0.06	mg/kg dry	5035/8260B	12/14/12	KAC
o-Xylene	<0.06	0.06	mg/kg dry	5035/8260B	12/14/12	KAC
m,p-Xylene	<0.06	0.06	mg/kg dry	5035/8260B	12/14/12	KAC
Methyl Tertiary Butyl Ether (MTBE)	<0.06	0.06	mg/kg dry	5035/8260B	12/14/12	KAC
2-Butanone(MEK)	<0.57	0.57	mg/kg dry	5035/8260B	12/14/12	KAC
Surrogates			RANGE	5035/8260B	12/14/12	KAC
Dibromofluoromethane	99		70-130%	5035/8260B	12/14/12	KAC
Toluene-d8	95		70-130%	5035/8260B	12/14/12	KAC
4-Bromofluorobenzene	96		70-130%	5035/8260B	12/14/12	KAC
1,2 Dichloroethane-d4	100		70-130%	5035/8260B	12/14/12	KAC

R.I. Analytical Laboratories, Inc.
CERTIFICATE OF ANALYSIS

GZA / Geoenvironmental, Inc.

Date Received: 12/13/12
Work Order #: 1212-26108
GZA FILE# 33868 TF GREEN WETLAND MITIGATION WARWICK, RI

Sample # 002
SAMPLE DESCRIPTION: GZ-2, S-2, 4-6'
SAMPLE TYPE: GRAB **SAMPLE DATE/TIME:** 12/12/2012 @ 09:00

PARAMETER	SAMPLE RESULTS	DET. LIMIT	UNITS	METHOD	DATE ANALYZED	ANALYST
TPH						
TPH GC/FID	79	12	mg/kg dry	SW846 8100M	12/20/12	TCL
Moisture	14		%	SM2540 G.	12/14/12	KD
Volatile Organic Compounds						
Benzene	<0.06	0.06	mg/kg dry	5035/8260B	12/14/12	KAC
Bromobenzene	<0.06	0.06	mg/kg dry	5035/8260B	12/14/12	KAC
Bromochloromethane	<0.06	0.06	mg/kg dry	5035/8260B	12/14/12	KAC
Bromodichloromethane	<0.06	0.06	mg/kg dry	5035/8260B	12/14/12	KAC
Bromoform	<0.06	0.06	mg/kg dry	5035/8260B	12/14/12	KAC
Bromomethane	<0.32	0.32	mg/kg dry	5035/8260B	12/14/12	KAC
n-Butylbenzene	<0.06	0.06	mg/kg dry	5035/8260B	12/14/12	KAC
Sec-butylbenzene	<0.06	0.06	mg/kg dry	5035/8260B	12/14/12	KAC
tert-Butylbenzene	<0.06	0.06	mg/kg dry	5035/8260B	12/14/12	KAC
Carbon Tetrachloride	<0.06	0.06	mg/kg dry	5035/8260B	12/14/12	KAC
Chlorobenzene	<0.06	0.06	mg/kg dry	5035/8260B	12/14/12	KAC
Chloroethane	<0.32	0.32	mg/kg dry	5035/8260B	12/14/12	KAC
Chloroform	<0.06	0.06	mg/kg dry	5035/8260B	12/14/12	KAC
Chloromethane	<0.32	0.32	mg/kg dry	5035/8260B	12/14/12	KAC
2-Chlorotoluene	<0.06	0.06	mg/kg dry	5035/8260B	12/14/12	KAC
4-Chlorotoluene	<0.06	0.06	mg/kg dry	5035/8260B	12/14/12	KAC
Dibromochloromethane	<0.06	0.06	mg/kg dry	5035/8260B	12/14/12	KAC
1,2-Dibromo-3-Chloropropane	<0.13	0.13	mg/kg dry	5035/8260B	12/14/12	KAC
1,2-Dibromoethane(EDB)	<0.06	0.06	mg/kg dry	5035/8260B	12/14/12	KAC
Dibromomethane	<0.13	0.13	mg/kg dry	5035/8260B	12/14/12	KAC
1,2-Dichlorobenzene	<0.06	0.06	mg/kg dry	5035/8260B	12/14/12	KAC
1,3-Dichlorobenzene	<0.06	0.06	mg/kg dry	5035/8260B	12/14/12	KAC
1,4-Dichlorobenzene	<0.06	0.06	mg/kg dry	5035/8260B	12/14/12	KAC
Dichlorodifluoromethane	<0.32	0.32	mg/kg dry	5035/8260B	12/14/12	KAC
1,1-Dichloroethane	<0.06	0.06	mg/kg dry	5035/8260B	12/14/12	KAC
1,2-Dichloroethane	<0.06	0.06	mg/kg dry	5035/8260B	12/14/12	KAC
1,1-Dichloroethene	<0.06	0.06	mg/kg dry	5035/8260B	12/14/12	KAC
cis-1,2-Dichloroethene	<0.06	0.06	mg/kg dry	5035/8260B	12/14/12	KAC
trans-1,2-Dichloroethylene	<0.06	0.06	mg/kg dry	5035/8260B	12/14/12	KAC
1,2-Dichloropropane	<0.06	0.06	mg/kg dry	5035/8260B	12/14/12	KAC
1,3-Dichloropropane	<0.06	0.06	mg/kg dry	5035/8260B	12/14/12	KAC

R.I. Analytical Laboratories, Inc.
CERTIFICATE OF ANALYSIS

GZA / Geoenvironmental, Inc.

Date Received: 12/13/12

Work Order #: 1212-26108

GZA FILE# 33868 TF GREEN WETLAND MITIGATION WARWICK, RI

Sample # 002
SAMPLE DESCRIPTION: GZ-2, S-2, 4-6'
SAMPLE TYPE: GRAB **SAMPLE DATE/TIME:** 12/12/2012 @ 09:00

PARAMETER	SAMPLE RESULTS	DET. LIMIT	UNITS	METHOD	DATE ANALYZED	ANALYST
2,2-Dichloropropane	<0.06	0.06	mg/kg dry	5035/8260B	12/14/12	KAC
1,1-Dichloropropene	<0.06	0.06	mg/kg dry	5035/8260B	12/14/12	KAC
Ethylbenzene	<0.06	0.06	mg/kg dry	5035/8260B	12/14/12	KAC
Hexachlorobutadiene	<0.06	0.06	mg/kg dry	5035/8260B	12/14/12	KAC
Isopropylbenzene	<0.06	0.06	mg/kg dry	5035/8260B	12/14/12	KAC
p-Isopropyltoluene	<0.06	0.06	mg/kg dry	5035/8260B	12/14/12	KAC
Methylene Chloride	<0.06	0.06	mg/kg dry	5035/8260B	12/14/12	KAC
n-Propylbenzene	<0.06	0.06	mg/kg dry	5035/8260B	12/14/12	KAC
Naphthalene	<0.06	0.06	mg/kg dry	5035/8260B	12/14/12	KAC
Styrene	<0.06	0.06	mg/kg dry	5035/8260B	12/14/12	KAC
1,1,1,2-Tetrachloroethane	<0.06	0.06	mg/kg dry	5035/8260B	12/14/12	KAC
1,1,2,2-Tetrachloroethane	<0.06	0.06	mg/kg dry	5035/8260B	12/14/12	KAC
Tetrachloroethene	<0.06	0.06	mg/kg dry	5035/8260B	12/14/12	KAC
Toluene	<0.06	0.06	mg/kg dry	5035/8260B	12/14/12	KAC
1,2,3-Trichlorobenzene	<0.06	0.06	mg/kg dry	5035/8260B	12/14/12	KAC
1,2,4-Trichlorobenzene	<0.06	0.06	mg/kg dry	5035/8260B	12/14/12	KAC
1,1,1-Trichloroethane	<0.06	0.06	mg/kg dry	5035/8260B	12/14/12	KAC
1,1,2-Trichloroethane	<0.06	0.06	mg/kg dry	5035/8260B	12/14/12	KAC
Trichloroethene	<0.06	0.06	mg/kg dry	5035/8260B	12/14/12	KAC
Trichlorofluoromethane	<0.06	0.06	mg/kg dry	5035/8260B	12/14/12	KAC
1,2,3-Trichloropropane	<0.06	0.06	mg/kg dry	5035/8260B	12/14/12	KAC
1,2,4-Trimethylbenzene	<0.06	0.06	mg/kg dry	5035/8260B	12/14/12	KAC
1,3,5-Trimethylbenzene	<0.06	0.06	mg/kg dry	5035/8260B	12/14/12	KAC
Vinyl Chloride	<0.06	0.06	mg/kg dry	5035/8260B	12/14/12	KAC
o-Xylene	<0.06	0.06	mg/kg dry	5035/8260B	12/14/12	KAC
m,p-Xylene	<0.06	0.06	mg/kg dry	5035/8260B	12/14/12	KAC
Methyl Tertiary Butyl Ether (MTBE)	<0.06	0.06	mg/kg dry	5035/8260B	12/14/12	KAC
2-Butanone(MEK)	<0.64	0.64	mg/kg dry	5035/8260B	12/14/12	KAC
Surrogates			RANGE	5035/8260B	12/14/12	KAC
Dibromofluoromethane	98		70-130%	5035/8260B	12/14/12	KAC
Toluene-d8	95		70-130%	5035/8260B	12/14/12	KAC
4-Bromofluorobenzene	99		70-130%	5035/8260B	12/14/12	KAC
1,2 Dichloroethane-d4	97		70-130%	5035/8260B	12/14/12	KAC

R.I. Analytical Laboratories, Inc.
CERTIFICATE OF ANALYSIS

GZA / Geoenvironmental, Inc.

Date Received: 12/13/12
Work Order #: 1212-26108
GZA FILE# 33868 TF GREEN WETLAND MITIGATION WARWICK, RI

Sample # 003
SAMPLE DESCRIPTION: GZ-3, S-2, 4-6'
SAMPLE TYPE: GRAB **SAMPLE DATE/TIME:** 12/12/2012 @ 10:30

PARAMETER	SAMPLE RESULTS	DET. LIMIT	UNITS	METHOD	DATE ANALYZED	ANALYST
TPH						
TPH GC/FID	71	11	mg/kg dry	SW846 8100M	12/20/12	TCL
Moisture	7		%	SM2540 G.	12/14/12	KD
Volatile Organic Compounds						
Benzene	<0.05	0.05	mg/kg dry	5035/8260B	12/14/12	KAC
Bromobenzene	<0.05	0.05	mg/kg dry	5035/8260B	12/14/12	KAC
Bromochloromethane	<0.05	0.05	mg/kg dry	5035/8260B	12/14/12	KAC
Bromodichloromethane	<0.05	0.05	mg/kg dry	5035/8260B	12/14/12	KAC
Bromoform	<0.05	0.05	mg/kg dry	5035/8260B	12/14/12	KAC
Bromomethane	<0.27	0.27	mg/kg dry	5035/8260B	12/14/12	KAC
n-Butylbenzene	<0.05	0.05	mg/kg dry	5035/8260B	12/14/12	KAC
Sec-butylbenzene	<0.05	0.05	mg/kg dry	5035/8260B	12/14/12	KAC
tert-Butylbenzene	<0.05	0.05	mg/kg dry	5035/8260B	12/14/12	KAC
Carbon Tetrachloride	<0.05	0.05	mg/kg dry	5035/8260B	12/14/12	KAC
Chlorobenzene	<0.05	0.05	mg/kg dry	5035/8260B	12/14/12	KAC
Chloroethane	<0.27	0.27	mg/kg dry	5035/8260B	12/14/12	KAC
Chloroform	<0.05	0.05	mg/kg dry	5035/8260B	12/14/12	KAC
Chloromethane	<0.27	0.27	mg/kg dry	5035/8260B	12/14/12	KAC
2-Chlorotoluene	<0.05	0.05	mg/kg dry	5035/8260B	12/14/12	KAC
4-Chlorotoluene	<0.05	0.05	mg/kg dry	5035/8260B	12/14/12	KAC
Dibromochloromethane	<0.05	0.05	mg/kg dry	5035/8260B	12/14/12	KAC
1,2-Dibromo-3-Chloropropane	<0.11	0.11	mg/kg dry	5035/8260B	12/14/12	KAC
1,2-Dibromoethane(EDB)	<0.05	0.05	mg/kg dry	5035/8260B	12/14/12	KAC
Dibromomethane	<0.11	0.11	mg/kg dry	5035/8260B	12/14/12	KAC
1,2-Dichlorobenzene	<0.05	0.05	mg/kg dry	5035/8260B	12/14/12	KAC
1,3-Dichlorobenzene	<0.05	0.05	mg/kg dry	5035/8260B	12/14/12	KAC
1,4-Dichlorobenzene	<0.05	0.05	mg/kg dry	5035/8260B	12/14/12	KAC
Dichlorodifluoromethane	<0.27	0.27	mg/kg dry	5035/8260B	12/14/12	KAC
1,1-Dichloroethane	<0.05	0.05	mg/kg dry	5035/8260B	12/14/12	KAC
1,2-Dichloroethane	<0.05	0.05	mg/kg dry	5035/8260B	12/14/12	KAC
1,1-Dichloroethene	<0.05	0.05	mg/kg dry	5035/8260B	12/14/12	KAC
cis-1,2-Dichloroethene	<0.05	0.05	mg/kg dry	5035/8260B	12/14/12	KAC
trans-1,2-Dichloroethylene	<0.05	0.05	mg/kg dry	5035/8260B	12/14/12	KAC
1,2-Dichloropropane	<0.05	0.05	mg/kg dry	5035/8260B	12/14/12	KAC
1,3-Dichloropropane	<0.05	0.05	mg/kg dry	5035/8260B	12/14/12	KAC

R.I. Analytical Laboratories, Inc.
CERTIFICATE OF ANALYSIS

GZA / Geoenvironmental, Inc.

Date Received: 12/13/12
Work Order #: 1212-26108
GZA FILE# 33868 TF GREEN WETLAND MITIGATION WARWICK, RI

Sample # 003
SAMPLE DESCRIPTION: GZ-3, S-2, 4-6'
SAMPLE TYPE: GRAB **SAMPLE DATE/TIME:** 12/12/2012 @ 10:30

PARAMETER	SAMPLE RESULTS	DET. LIMIT	UNITS	METHOD	DATE ANALYZED	ANALYST
2,2-Dichloropropane	<0.05	0.05	mg/kg dry	5035/8260B	12/14/12	KAC
1,1-Dichloropropene	<0.05	0.05	mg/kg dry	5035/8260B	12/14/12	KAC
Ethylbenzene	<0.05	0.05	mg/kg dry	5035/8260B	12/14/12	KAC
Hexachlorobutadiene	<0.05	0.05	mg/kg dry	5035/8260B	12/14/12	KAC
Isopropylbenzene	<0.05	0.05	mg/kg dry	5035/8260B	12/14/12	KAC
p-Isopropyltoluene	<0.05	0.05	mg/kg dry	5035/8260B	12/14/12	KAC
Methylene Chloride	<0.05	0.05	mg/kg dry	5035/8260B	12/14/12	KAC
n-Propylbenzene	<0.05	0.05	mg/kg dry	5035/8260B	12/14/12	KAC
Naphthalene	<0.05	0.05	mg/kg dry	5035/8260B	12/14/12	KAC
Styrene	<0.05	0.05	mg/kg dry	5035/8260B	12/14/12	KAC
1,1,1,2-Tetrachloroethane	<0.05	0.05	mg/kg dry	5035/8260B	12/14/12	KAC
1,1,2,2-Tetrachloroethane	<0.05	0.05	mg/kg dry	5035/8260B	12/14/12	KAC
Tetrachloroethene	<0.05	0.05	mg/kg dry	5035/8260B	12/14/12	KAC
Toluene	<0.05	0.05	mg/kg dry	5035/8260B	12/14/12	KAC
1,2,3-Trichlorobenzene	<0.05	0.05	mg/kg dry	5035/8260B	12/14/12	KAC
1,2,4-Trichlorobenzene	<0.05	0.05	mg/kg dry	5035/8260B	12/14/12	KAC
1,1,1-Trichloroethane	<0.05	0.05	mg/kg dry	5035/8260B	12/14/12	KAC
1,1,2-Trichloroethane	<0.05	0.05	mg/kg dry	5035/8260B	12/14/12	KAC
Trichloroethene	<0.05	0.05	mg/kg dry	5035/8260B	12/14/12	KAC
Trichlorofluoromethane	<0.05	0.05	mg/kg dry	5035/8260B	12/14/12	KAC
1,2,3-Trichloropropane	<0.05	0.05	mg/kg dry	5035/8260B	12/14/12	KAC
1,2,4-Trimethylbenzene	<0.05	0.05	mg/kg dry	5035/8260B	12/14/12	KAC
1,3,5-Trimethylbenzene	<0.05	0.05	mg/kg dry	5035/8260B	12/14/12	KAC
Vinyl Chloride	<0.05	0.05	mg/kg dry	5035/8260B	12/14/12	KAC
o-Xylene	<0.05	0.05	mg/kg dry	5035/8260B	12/14/12	KAC
m,p-Xylene	<0.05	0.05	mg/kg dry	5035/8260B	12/14/12	KAC
Methyl Tertiary Butyl Ether (MTBE)	<0.05	0.05	mg/kg dry	5035/8260B	12/14/12	KAC
2-Butanone(MEK)	<0.55	0.55	mg/kg dry	5035/8260B	12/14/12	KAC
Surrogates			RANGE	5035/8260B	12/14/12	KAC
Dibromofluoromethane	97		70-130%	5035/8260B	12/14/12	KAC
Toluene-d8	95		70-130%	5035/8260B	12/14/12	KAC
4-Bromofluorobenzene	97		70-130%	5035/8260B	12/14/12	KAC
1,2 Dichloroethane-d4	97		70-130%	5035/8260B	12/14/12	KAC

R.I. Analytical Laboratories, Inc.
CERTIFICATE OF ANALYSIS

GZA / Geoenvironmental, Inc.

Date Received: 12/13/12
Work Order #: 1212-26108
GZA FILE# 33868 TF GREEN WETLAND MITIGATION WARWICK, RI

Sample # 004
SAMPLE DESCRIPTION: GZ-4, S-2, 4-6'
SAMPLE TYPE: GRAB **SAMPLE DATE/TIME:** 12/12/2012 @ 13:00

PARAMETER	SAMPLE RESULTS	DET. LIMIT	UNITS	METHOD	DATE ANALYZED	ANALYST
TPH						
TPH GC/FID	430	11	mg/kg dry	SW846 8100M	12/20/12	TCL
Moisture	11		%	SM2540 G.	12/14/12	KD
Volatile Organic Compounds						
Benzene	<0.06	0.06	mg/kg dry	5035/8260B	12/14/12	KAC
Bromobenzene	<0.06	0.06	mg/kg dry	5035/8260B	12/14/12	KAC
Bromochloromethane	<0.06	0.06	mg/kg dry	5035/8260B	12/14/12	KAC
Bromodichloromethane	<0.06	0.06	mg/kg dry	5035/8260B	12/14/12	KAC
Bromoform	<0.06	0.06	mg/kg dry	5035/8260B	12/14/12	KAC
Bromomethane	<0.29	0.29	mg/kg dry	5035/8260B	12/14/12	KAC
n-Butylbenzene	<0.06	0.06	mg/kg dry	5035/8260B	12/14/12	KAC
Sec-butylbenzene	<0.06	0.06	mg/kg dry	5035/8260B	12/14/12	KAC
tert-Butylbenzene	<0.06	0.06	mg/kg dry	5035/8260B	12/14/12	KAC
Carbon Tetrachloride	<0.06	0.06	mg/kg dry	5035/8260B	12/14/12	KAC
Chlorobenzene	<0.06	0.06	mg/kg dry	5035/8260B	12/14/12	KAC
Chloroethane	<0.29	0.29	mg/kg dry	5035/8260B	12/14/12	KAC
Chloroform	<0.06	0.06	mg/kg dry	5035/8260B	12/14/12	KAC
Chloromethane	<0.29	0.29	mg/kg dry	5035/8260B	12/14/12	KAC
2-Chlorotoluene	<0.06	0.06	mg/kg dry	5035/8260B	12/14/12	KAC
4-Chlorotoluene	<0.06	0.06	mg/kg dry	5035/8260B	12/14/12	KAC
Dibromochloromethane	<0.06	0.06	mg/kg dry	5035/8260B	12/14/12	KAC
1,2-Dibromo-3-Chloropropane	<0.12	0.12	mg/kg dry	5035/8260B	12/14/12	KAC
1,2-Dibromoethane(EDB)	<0.06	0.06	mg/kg dry	5035/8260B	12/14/12	KAC
Dibromomethane	<0.12	0.12	mg/kg dry	5035/8260B	12/14/12	KAC
1,2-Dichlorobenzene	<0.06	0.06	mg/kg dry	5035/8260B	12/14/12	KAC
1,3-Dichlorobenzene	<0.06	0.06	mg/kg dry	5035/8260B	12/14/12	KAC
1,4-Dichlorobenzene	<0.06	0.06	mg/kg dry	5035/8260B	12/14/12	KAC
Dichlorodifluoromethane	<0.29	0.29	mg/kg dry	5035/8260B	12/14/12	KAC
1,1-Dichloroethane	<0.06	0.06	mg/kg dry	5035/8260B	12/14/12	KAC
1,2-Dichloroethane	<0.06	0.06	mg/kg dry	5035/8260B	12/14/12	KAC
1,1-Dichloroethene	<0.06	0.06	mg/kg dry	5035/8260B	12/14/12	KAC
cis-1,2-Dichloroethene	<0.06	0.06	mg/kg dry	5035/8260B	12/14/12	KAC
trans-1,2-Dichloroethylene	<0.06	0.06	mg/kg dry	5035/8260B	12/14/12	KAC
1,2-Dichloropropane	<0.06	0.06	mg/kg dry	5035/8260B	12/14/12	KAC
1,3-Dichloropropane	<0.06	0.06	mg/kg dry	5035/8260B	12/14/12	KAC

R.I. Analytical Laboratories, Inc.
CERTIFICATE OF ANALYSIS

GZA / Geoenvironmental, Inc.

Date Received: 12/13/12

Work Order #: 1212-26108

GZA FILE# 33868 TF GREEN WETLAND MITIGATION WARWICK, RI

Sample # 004
SAMPLE DESCRIPTION: GZ-4, S-2, 4-6'
SAMPLE TYPE: GRAB **SAMPLE DATE/TIME:** 12/12/2012 @ 13:00

PARAMETER	SAMPLE RESULTS	DET. LIMIT	UNITS	METHOD	DATE ANALYZED	ANALYST
2,2-Dichloropropane	<0.06	0.06	mg/kg dry	5035/8260B	12/14/12	KAC
1,1-Dichloropropene	<0.06	0.06	mg/kg dry	5035/8260B	12/14/12	KAC
Ethylbenzene	<0.06	0.06	mg/kg dry	5035/8260B	12/14/12	KAC
Hexachlorobutadiene	<0.06	0.06	mg/kg dry	5035/8260B	12/14/12	KAC
Isopropylbenzene	<0.06	0.06	mg/kg dry	5035/8260B	12/14/12	KAC
p-Isopropyltoluene	<0.06	0.06	mg/kg dry	5035/8260B	12/14/12	KAC
Methylene Chloride	<0.06	0.06	mg/kg dry	5035/8260B	12/14/12	KAC
n-Propylbenzene	<0.06	0.06	mg/kg dry	5035/8260B	12/14/12	KAC
Naphthalene	0.31	0.06	mg/kg dry	5035/8260B	12/14/12	KAC
Styrene	<0.06	0.06	mg/kg dry	5035/8260B	12/14/12	KAC
1,1,1,2-Tetrachloroethane	<0.06	0.06	mg/kg dry	5035/8260B	12/14/12	KAC
1,1,2,2-Tetrachloroethane	<0.06	0.06	mg/kg dry	5035/8260B	12/14/12	KAC
Tetrachloroethene	<0.06	0.06	mg/kg dry	5035/8260B	12/14/12	KAC
Toluene	<0.06	0.06	mg/kg dry	5035/8260B	12/14/12	KAC
1,2,3-Trichlorobenzene	<0.06	0.06	mg/kg dry	5035/8260B	12/14/12	KAC
1,2,4-Trichlorobenzene	<0.06	0.06	mg/kg dry	5035/8260B	12/14/12	KAC
1,1,1-Trichloroethane	<0.06	0.06	mg/kg dry	5035/8260B	12/14/12	KAC
1,1,2-Trichloroethane	<0.06	0.06	mg/kg dry	5035/8260B	12/14/12	KAC
Trichloroethene	<0.06	0.06	mg/kg dry	5035/8260B	12/14/12	KAC
Trichlorofluoromethane	<0.06	0.06	mg/kg dry	5035/8260B	12/14/12	KAC
1,2,3-Trichloropropane	<0.06	0.06	mg/kg dry	5035/8260B	12/14/12	KAC
1,2,4-Trimethylbenzene	<0.06	0.06	mg/kg dry	5035/8260B	12/14/12	KAC
1,3,5-Trimethylbenzene	<0.06	0.06	mg/kg dry	5035/8260B	12/14/12	KAC
Vinyl Chloride	<0.06	0.06	mg/kg dry	5035/8260B	12/14/12	KAC
o-Xylene	<0.06	0.06	mg/kg dry	5035/8260B	12/14/12	KAC
m,p-Xylene	<0.06	0.06	mg/kg dry	5035/8260B	12/14/12	KAC
Methyl Tertiary Butyl Ether (MTBE)	<0.06	0.06	mg/kg dry	5035/8260B	12/14/12	KAC
2-Butanone(MEK)	<0.58	0.58	mg/kg dry	5035/8260B	12/14/12	KAC
Surrogates			RANGE	5035/8260B	12/14/12	KAC
Dibromofluoromethane	98		70-130%	5035/8260B	12/14/12	KAC
Toluene-d8	94		70-130%	5035/8260B	12/14/12	KAC
4-Bromofluorobenzene	96		70-130%	5035/8260B	12/14/12	KAC
1,2 Dichloroethane-d4	98		70-130%	5035/8260B	12/14/12	KAC

QA/QC Report

Client: GZA / Geoenvironmental, Inc.
WO #: 1212-26108
Date: 12/21/2012

-Method Blanks Results-

Parameter	Units	Results	Date Analyzed
Total Petroleum Hydrocarbons by Method 8100 (Soil)			
TPH GC/FID	mg/kg dry	<10	12/20/2012
Volatile Organics by Method 5035/8260B			
Benzene	mg/kg dry	<0.05	12/14/2012
Bromobenzene	mg/kg dry	<0.05	12/14/2012
Bromochloromethane	mg/kg dry	<0.05	12/14/2012
Bromodichloromethane	mg/kg dry	<0.05	12/14/2012
Bromoform	mg/kg dry	<0.05	12/14/2012
Bromomethane	mg/kg dry	<0.25	12/14/2012
Sec-butylbenzene	mg/kg dry	<0.05	12/14/2012
n-Butylbenzene	mg/kg dry	<0.05	12/14/2012
tert-Butylbenzene	mg/kg dry	<0.05	12/14/2012
Carbon Tetrachloride	mg/kg dry	<0.05	12/14/2012
Chlorobenzene	mg/kg dry	<0.05	12/14/2012
Dibromochloromethane	mg/kg dry	<0.05	12/14/2012
Chloroethane	mg/kg dry	<0.25	12/14/2012
Chloroform	mg/kg dry	<0.05	12/14/2012
Chloromethane	mg/kg dry	<0.25	12/14/2012
2-Chlorotoluene	mg/kg dry	<0.05	12/14/2012
4-Chlorotoluene	mg/kg dry	<0.05	12/14/2012
1,2-Dibromo-3-Chloropropane	mg/kg dry	<0.10	12/14/2012
1,2-Dibromoethane(EDB)	mg/kg dry	<0.05	12/14/2012
Dibromomethane	mg/kg dry	<0.10	12/14/2012
1,3-Dichlorobenzene	mg/kg dry	<0.05	12/14/2012
1,2-Dichlorobenzene	mg/kg dry	<0.05	12/14/2012
1,4-Dichlorobenzene	mg/kg dry	<0.05	12/14/2012
n-Propylbenzene	mg/kg dry	<0.05	12/14/2012
Naphthalene	mg/kg dry	<0.05	12/14/2012
Dichlorodifluoromethane	mg/kg dry	<0.25	12/14/2012
1,1-Dichloroethane	mg/kg dry	<0.05	12/14/2012
1,2-Dichloroethane	mg/kg dry	<0.05	12/14/2012
1,1-Dichloroethene	mg/kg dry	<0.05	12/14/2012
cis-1,2-Dichloroethene	mg/kg dry	<0.05	12/14/2012
trans-1,2-Dichloroethylene	mg/kg dry	<0.05	12/14/2012
1,2-Dichloropropane	mg/kg dry	<0.05	12/14/2012
1,3-Dichloropropane	mg/kg dry	<0.05	12/14/2012
2,2-Dichloropropane	mg/kg dry	<0.05	12/14/2012
1,1-Dichloropropene	mg/kg dry	<0.05	12/14/2012
Ethylbenzene	mg/kg dry	<0.05	12/14/2012

QA/QC Report

Client: GZA / Geoenvironmental, Inc.
WO #: 1212-26108
Date: 12/21/2012

-Method Blanks Results-

Parameter	Units	Results	Date Analyzed
Volatile Organics by Method 5035/8260B (cont'd)			
Hexachlorobutadiene	mg/kg dry	<0.05	12/14/2012
Isopropylbenzene	mg/kg dry	<0.05	12/14/2012
p-Isopropyltoluene	mg/kg dry	<0.05	12/14/2012
2-Butanone(MEK)	mg/kg dry	<0.50	12/14/2012
MTBE	mg/kg dry	<0.05	12/14/2012
Methylene Chloride	mg/kg dry	<0.05	12/14/2012
1,1,2-Trichloroethane	mg/kg dry	<0.05	12/14/2012
Styrene	mg/kg dry	<0.05	12/14/2012
1,1,1,2-Tetrachloroethane	mg/kg dry	<0.05	12/14/2012
1,1,2,2-Tetrachloroethane	mg/kg dry	<0.05	12/14/2012
Tetrachloroethene	mg/kg dry	<0.05	12/14/2012
Toluene	mg/kg dry	<0.05	12/14/2012
1,2,4-Trichlorobenzene	mg/kg dry	<0.05	12/14/2012
1,2,3-Trichlorobenzene	mg/kg dry	<0.05	12/14/2012
1,1,1-Trichloroethane	mg/kg dry	<0.05	12/14/2012
Trichloroethene	mg/kg dry	<0.05	12/14/2012
Trichlorofluoromethane	mg/kg dry	<0.05	12/14/2012
1,2,3-Trichloropropane	mg/kg dry	<0.05	12/14/2012
1,2,4-Trimethylbenzene	mg/kg dry	<0.05	12/14/2012
1,3,5-Trimethylbenzene	mg/kg dry	<0.05	12/14/2012
Vinyl Chloride	mg/kg dry	<0.05	12/14/2012
o-Xylene	mg/kg dry	<0.05	12/14/2012
m,p-Xylene	mg/kg dry	<0.05	12/14/2012
Surrogates	**RANGE**		12/14/2012
Toluene-d8	70-130%	95	12/14/2012
Dibromofluoromethane	70-130%	98	12/14/2012
1,2 Dichloroethane-d4	70-130%	97	12/14/2012
4-Bromofluorobenzene	70-130%	96	12/14/2012

-LCS/LCS Duplicate Data Results-

Parameter	Spike Conc	LCS Conc	LCS % Rec	LCS Dup Conc	LCS DUP % Rec	% RPD	Date Analyzed
Volatile Organics by Method 5035/8260B							
Benzene	2.5	2.5	100	2.5	100	0	12/14/2012
Bromobenzene	2.5	2.5	100	2.5	100	0	12/14/2012
Bromochloromethane	2.5	2.4	96	2.4	96	0	12/14/2012
Bromodichloromethane	2.5	2.6	104	2.6	104	0	12/14/2012
Bromoform	2.5	2.2	88	2.2	88	0	12/14/2012

QA/QC Report

Client: GZA / Geoenvironmental, Inc.
WO #: 1212-26108
Date: 12/21/2012

-LCS/LCS Duplicate Data Results-

Parameter	Spike Conc	LCS Conc	LCS % Rec	LCS Dup Conc	LCS DUP % Rec	% RPD	Date Analyzed
Volatile Organics by Method 5035/8260B (cont'd)							
Bromomethane	2.5	1.8	72	1.8	72	0	12/14/2012
Sec-butylbenzene	2.5	2.6	104	2.6	104	0	12/14/2012
n-Butylbenzene	2.5	2.6	104	2.5	100	4	12/14/2012
tert-Butylbenzene	2.5	2.7	108	2.6	104	4	12/14/2012
Carbon Tetrachloride	2.5	2.7	108	2.6	104	4	12/14/2012
Chlorobenzene	2.5	2.6	104	2.5	100	4	12/14/2012
Dibromochloromethane	2.5	2.8	112	2.7	108	4	12/14/2012
Chloroethane	2.5	1.8	72	1.8	72	0	12/14/2012
Chloroform	2.5	2.5	100	2.4	96	4	12/14/2012
Chloromethane	2.5	1.8	72	1.8	72	0	12/14/2012
2-Chlorotoluene	2.5	2.5	100	2.5	100	0	12/14/2012
4-Chlorotoluene	2.5	2.6	104	2.6	104	0	12/14/2012
1,2-Dibromo-3-Chloropropane	2.5	2.4	96	2.4	96	0	12/14/2012
1,2-Dibromoethane(EDB)	2.5	2.7	108	2.7	108	0	12/14/2012
Dibromomethane	2.5	2.6	104	2.6	104	0	12/14/2012
1,3-Dichlorobenzene	2.5	2.6	104	2.5	100	4	12/14/2012
1,2-Dichlorobenzene	2.5	2.5	100	2.5	100	0	12/14/2012
1,4-Dichlorobenzene	2.5	2.6	104	2.5	100	4	12/14/2012
n-Propylbenzene	2.5	2.7	108	2.6	104	4	12/14/2012
Naphthalene	2.5	2.3	92	2.3	92	0	12/14/2012
Dichlorodifluoromethane	2.5	1.8	72	1.8	72	0	12/14/2012
1,1-Dichloroethane	2.5	2.5	100	2.4	96	4	12/14/2012
1,2-Dichloroethane	2.5	2.4	96	2.4	96	0	12/14/2012
1,1-Dichloroethene	2.5	2.1	84	2.0	80	5	12/14/2012
cis-1,2-Dichloroethene	2.5	2.5	100	2.4	96	4	12/14/2012
trans-1,2-Dichloroethylene	2.5	2.5	100	2.4	96	4	12/14/2012
1,2-Dichloropropane	2.5	2.6	104	2.5	100	4	12/14/2012
1,3-Dichloropropane	2.5	2.5	100	2.5	100	0	12/14/2012
2,2-Dichloropropane	2.5	2.6	104	2.5	100	4	12/14/2012
1,1-Dichloropropene	2.5	2.6	104	2.5	100	4	12/14/2012
Ethylbenzene	2.5	2.6	104	2.5	100	4	12/14/2012
Hexachlorobutadiene	2.5	2.2	88	2.2	88	0	12/14/2012
Isopropylbenzene	2.5	2.7	108	2.6	104	4	12/14/2012
p-Isopropyltoluene	2.5	2.7	108	2.6	104	4	12/14/2012
2-Butanone(MEK)	25	24	96	24	96	0	12/14/2012
MTBE	2.5	2.4	96	2.5	100	4	12/14/2012
Methylene Chloride	2.5	2.3	92	2.3	92	0	12/14/2012

QA/QC Report

Client: GZA / Geoenvironmental, Inc.
WO #: 1212-26108
Date: 12/21/2012

-LCS/LCS Duplicate Data Results-

Parameter	Spike Conc	LCS Conc	LCS % Rec	LCS Dup Conc	LCS DUP % Rec	% RPD	Date Analyzed
Volatile Organics by Method 5035/8260B (cont'd)							
1,1,2-Trichloroethane	2.5	2.6	104	2.6	104	0	12/14/2012
Styrene	2.5	2.3	92	2.2	88	4	12/14/2012
1,1,1,2-Tetrachloroethane	2.5	2.6	104	2.6	104	0	12/14/2012
1,1,2,2-Tetrachloroethane	2.5	2.5	100	2.5	100	0	12/14/2012
Tetrachloroethene	2.5	2.8	112	2.7	108	4	12/14/2012
Toluene	2.5	2.6	104	2.5	100	4	12/14/2012
1,2,4-Trichlorobenzene	2.5	2.4	96	2.4	96	0	12/14/2012
1,2,3-Trichlorobenzene	2.5	2.2	88	2.3	92	4	12/14/2012
1,1,1-Trichloroethane	2.5	2.6	104	2.5	100	4	12/14/2012
Trichloroethene	2.5	2.6	104	2.5	100	4	12/14/2012
Trichlorofluoromethane	2.5	2.2	88	2.2	88	0	12/14/2012
1,2,3-Trichloropropane	2.5	2.5	100	2.5	100	0	12/14/2012
1,2,4-Trimethylbenzene	2.5	2.6	104	2.6	104	0	12/14/2012
1,3,5-Trimethylbenzene	2.5	2.7	108	2.6	104	4	12/14/2012
Vinyl Chloride	2.5	2.1	84	2.1	84	0	12/14/2012
o-Xylene	2.5	2.7	108	2.6	104	4	12/14/2012
m,p-Xylene	5.0	5.3	106	5.2	104	2	12/14/2012
Surrogates							
Toluene-d8		101		102			
Dibromofluoromethane		101		101			
1,2 Dichloroethane-d4		100		99			
4-Bromofluorobenzene		99		99			
Total Petroleum Hydrocarbons by Method 8100 (Soil)							
TPH GC/FID	66.7	59.2	89	52.8	79	11	12/20/2012

Case Narrative

Date: 12/21/2012

GZA / Geoenvironmental, Inc.
Attn: Mr. William Ladd
530 Broadway
Providence, RI 02909

Project: GZA FILE# 33868 TF GREENWETLAND MITIGATION WARWICK, RI

RIAL WO#: 1212-26108

Samples were received at the laboratory outside of the recommended temperature limits of 0-6C.

Sharon Baker
Data Reporting / MIS Manager

WHITE COPY - Original YELLOW COPY - Lab Files PINK COPY - Project Manager

W.O. #_____ (for lab use only)

CHAIN-OF-CUSTODY RECORD

Sample I.D.	Date/Time Sampled (Very Important)	Matrix (A=Air, S=Soil, GW=Ground W., SW=Surface W., WW=Waste W., DW=Drinking W., Other (specify))	☐pH ☐Cond.	GC Screen (VOA)	☐524.2 ☐502.2	WW ONLY: 624	☐601 ☐602	625	Formaldehyde	8260	8021	8021 - "8010" List	8021 "8020" List	8270 ☐Full ☐PAH ☐BN	8082-PCBs Only	8081 - Pest Only	TPH-GC (Mod. 8100)	TPH-GC w/FING	EPH (MA DEP)	VPH (MA DEP)	TCLP (Spec. Below)	Filtering (✓ if requested)	Metals ☐PPM-13 ☐ R-8	Metals (List Below)					Total # of Cont.	Note #
GZ-1, S-2, 4-6'	12/10/12 - 0900 hrs	S								X							X												1	1
GZ-2, S-2, 4-6'	12/12/12 - 0900 hrs	S								X							X												1	1
GZ-3, S-2, 4-6'	" - 1030 hrs	S								X							X												1	1
GZ-4, S-2, 4-6'	" - 1300 hrs	S								X							X												1	1

PRESERVATIVE (Cl - HCl, M=MeOH, N - HNO3, S - H2SO4, Na - NaOH, O - Other)*

CONTAINER TYPE (P-Plastic, G-Glass, V-Vial, O-Other)*

RELINQUISHED BY:	DATE/TIME	RECEIVED BY:
Adam Michowski	12/13/12 - 1600 hrs	
RELINQUISHED BY:	DATE/TIME	RECEIVED BY:
RELINQUISHED BY:	DATE/TIME	RECEIVED BY:

NOTES: Preservatives, special reporting limits, known contamination, additional testing parameters, etc.:

1.) Please split the 8 oz jars for TPH & VOC's testing -
Please Bill ~~[illegible]~~ GZA directly ~~[illegible]~~

11.4°C

PROJECT MANAGER: William Lucid EXT: 2718

TURNAROUND TIME: (Standard) Rush___ Days, Approved by:_____

LAB USE: TEMP. OF COOLER 4.4 °C on ice

DATA REPORT ☑ PDF (Adobe) ☐ ASCII ☐ EXCEL Specify State_____

GZA FILE NO: 33865 P.O. NO. _____

PROJECT TF Green Wetland Mitigation

LOCATION Warwick, RI

COLLECTOR(S) A. Michowski SHEET 1 OF 1

GZA GEOENVIRONMENTAL, INC.
ENGINEERS AND SCIENTISTS
~~106 South Street~~ 530 Broadway
~~Hopkinton, MA 01748~~ Providence, RI
~~(508) 435-9244~~ 02909
FAX ~~(508) 435-9912~~ 401-477-2718

ACCREDITED IN ACCORDANCE WITH nelac

GZAP003

1212-216108

WHITE COPY - Original YELLOW COPY - Lab Files PINK COPY - Project Manager

CHAIN-OF-CUSTODY RECORD

W.O. # _____ *(for lab use only)*

Sample I.D.	Date/Time Sampled (Very Important)	Matrix (A=Air, S=Soil, GW=Ground W., SW=Surface W., WW=Waste W., DW=Drinking W., Other (specify))	☐pH ☐Cond.	GC Screen (VOA)	☐524.2 ☐502.2	WW ONLY: 624	☐601 ☐602	625	Formaldehyde	ANALYSIS REQUIRED: 8260	8021	8021 - "8010" List	8021 "8020" List	8270 ☐Full ☐PAH ☐BN	8082-PCBs Only	8081 - Pest Only	TPH-GC (Mod. 8100)	TPH-GC w/FING	EPH (MA DEP)	VPH (MA DEP)	TCLP (Spec. Below)	Filtering (✓if requested)	Metals ☐PPM-13 ☐R-8	Metals (List Below)					Total # of Cont.	Note #
GZ-1, S-2, 4-6'	12/12/12	S								X							X													
GZ-2, S-2, 4-6'	12/12/12	S								X							X													
GZ-3, S-2, 4-6'	12/12/12	S								X							X													
GZ-4, S-2, 4-6'	12/12/12	S								X							X													
PRESERVATIVE (Cl - HCl, M=MeOH, N - HNO3, S - H2SO4, Na - NaOH, O - Other)*																														
CONTAINER TYPE (P-Plastic, G-Glass, V-Vial, O-Other)*																														

RELINQUISHED BY:	DATE/TIME	RECEIVED BY:
Adam Michowski	12/13/12 - 1600 hrs	
RELINQUISHED BY:	DATE/TIME	RECEIVED BY:
RELINQUISHED BY:	DATE/TIME	RECEIVED BY:

NOTES: Preservatives, special reporting limits, known contamination, additional testing parameters, etc.:

1.) Please split the 8oz jars for TPH & VOC's testing - Please Bill ~~[illegible]~~ GZA directly ~~[illegible]~~

PROJECT MANAGER: William Ladd EXT: 2718

DATA REPORT ☑ PDF (Adobe) ☐ ASCII ☐ EXCEL Specify State_____

TURNAROUND TIME: Standard Rush___ Days, Approved by:_____

LAB USE: TEMP. OF COOLER ~~4~~ °C

GZA GEOENVIRONMENTAL, INC.
ENGINEERS AND SCIENTISTS
~~106 South Street~~ 330 Broadway
~~Hopkinton, MA 01748~~ Providence, RI
~~(508) 435-9244~~ 02909
~~FAX (508) 435-9912~~ 401-421-2718

GZA FILE NO: 33868 P.O. NO. _____

PROJECT TF Green Wetland Mitigation

LOCATION Warwick, RI

COLLECTOR(S) A. Michowski SHEET 1 OF 1

GZAP003

Rhode Island Airport Corporation
Phase 2 - Runway 34 End Safety Area, NAVAID Improvements, and Wetland Mitigation
T. F. Green State Airport
Warwick, Rhode Island
RIAC Construction Contract No. 24873
Volume 1 – Runway 34 End Safety Area and NAVAID Improvements
SCHEDULE OF PRICES
BASE BID

Item No.	Pay Item No.	Estimated Quantity	Item of Work With Unit Prices Written in Words	Figures			
				Unit Bid Price		Bid Amount	
				Dollars	Cents	Dollars	Cents
1	M-001.1	12 MONTH	Field Office at _____ Dollars & Cents per Month				
2	M-001.2	1 ALLOW	Radios at ____SEVEN THOUSAND_____ Dollars & Cents per Allowance	7,000	.00	7,000	.00
3	M-001.3	1 ALLOW	Safety Cones and Signs at ____TEN THOUSAND_____ Dollars & Cents per Allowance	10,000	.00	10,000	.00
4	M-001.4	1 ALLOW	Temporary VSR/Haul Road at ____TWENTY THOUSAND_____ Dollars & Cents per Allowance	20,000	.00	20,000	.00
5	P-102.1	5,000 SY	Bituminous Concrete Milling (0 – 4”) at _____ Dollars & Cents per Square Yard				
6	P-102.2	40,000 SY	Bituminous Pavement Removal at _____ Dollars & Cents per Square Yard				
7	P-102.3	28,000 SY	Concrete Pavement Removal at _____ Dollars & Cents per Square Yard				
8	P-102.4	300 LF	Saw Cut Pavement at _____ Dollars & Cents per Linear Foot				
9	P-151.1	4 ACRES	Clearing and Grubbing at _____ Dollars & Cents per Acre				
10	P-152.1	87,500 CY	Muck Excavation at _____ Dollars & Cents per Cubic Yard				

Rhode Island Airport Corporation
Phase 2 - Runway 34 End Safety Area, NAVAID Improvements, and Wetland Mitigation
T. F. Green State Airport
Warwick, Rhode Island
RIAC Construction Contract No. 24873
Volume 1 – Runway 34 End Safety Area and NAVAID Improvements
SCHEDULE OF PRICES
BASE BID

Item No.	Pay Item No.	Estimated Quantity	Item of Work With Unit Prices Written in Words	Figures			
				Unit Bid Price		Bid Amount	
				Dollars	Cents	Dollars	Cents
11	P-152.2	6,000 CY	Unclassified Excavation at _____ Dollars and Cents per Cubic Yard				
12	P-152.3	181,000 CY	Foreign Borrow at _____ Dollars and Cents per Cubic Yard				
13	P-154.1	22,000 SY	Subbase Course, 4-inch at _____ Dollars & Cents per Square Yard				
14	P-154.2	31,000 SY	Subbase Course, 7-inch at _____ Dollars & Cents per Square Yard				
15	P-156.1	525 LF	Erosion Control Wattles, 8-inch at _____ Dollars and Cents per Linear Foot				
16	P-156.2	8,500 LF	Erosion Control Wattles, 24-inch at _____ Dollars & Cents per Linear Foot				
17	P-156.3	22 EA	Inlet Protection/Catch Basin Filter Bags at _____ Dollars & Cents per Each				
18	P-156.4	5,000 SY	Erosion Matting at _____ Dollars & Cents per Square Yard				
19	P-156.5	3 EA	Stabilized Construction Entrance at _____ Dollars & Cents per Each				
20	P-156.8	10,000 LF	Silt Wattle at _____ Dollars & Cents per Linear Foot				
21	P-156.9	25 EA	Sediment Control Filter Bag at _____ Dollars & Cents per Each				

Rhode Island Airport Corporation
Phase 2 - Runway 34 End Safety Area, NAVAID Improvements, and Wetland Mitigation
T. F. Green State Airport
Warwick, Rhode Island
RIAC Construction Contract No. 24873
Volume 1 – Runway 34 End Safety Area and NAVAID Improvements
SCHEDULE OF PRICES
BASE BID

Item No.	Pay Item No.	Estimated Quantity	Item of Work With Unit Prices Written in Words	Figures			
				Unit Bid Price		Bid Amount	
				Dollars	Cents	Dollars	Cents
22	P-156.10	1 LS	Temporary Dewatering at _____ Dollars & Cents per Each				
23	P-209.1	22,000 SY	Crushed Aggregate Base Course, 4-inch at _____ Dollars & Cents per Square Yard				
24	P-209.2	31,000 SY	Crushed Aggregate Base Course, 8-inch at _____ Dollars & Cents per Square Yard				
25	M-301.1	7,500 SY	RIDOT Aggregate or Gravel Base Course, 12-inch at _____ Dollars & Cents per Square Yard				
26	P-401.1	8,000 TN	Bituminous Surface Course Pavement at _____ Dollars & Cents per Ton				
27	P-401.2	10,500 TN	Bituminous Base Course Pavement at _____ Dollars & Cents per Ton				
28	M-401.1	900 TN	RIDOT Bituminous Surface Course Pavement at _____ Dollars & Cents per Ton				
29	M-401.2	1,300 TN	RIDOT Bituminous Base Course Pavement at _____ Dollars & Cents per Ton				
30	P-555.1	1 LS	EMAS Bed Installation at _____ Dollars & Cents per Lump Sum				
31	P-556.1	1 LS	Concrete Anchor Beam Installation at _____ Dollars & Cents per Lump Sum				

Rhode Island Airport Corporation
Phase 2 - Runway 34 End Safety Area, NAVAID Improvements, and Wetland Mitigation
T. F. Green State Airport
Warwick, Rhode Island
RIAC Construction Contract No. 24873
Volume 1 – Runway 34 End Safety Area and NAVAID Improvements
SCHEDULE OF PRICES
BASE BID

Item No.	Pay Item No.	Estimated Quantity	Item of Work With Unit Prices Written in Words	Figures			
				Unit Bid Price		Bid Amount	
				Dollars	Cents	Dollars	Cents
32	P-602.1	27,000 GAL	Bituminous Prime Coat at _____ Dollars & Cents per Gallon				
33	P-603.1	15,000 GAL	Bituminous Tack Coat at _____ Dollars & Cents per Gallon				
34	P-620.1	38,000 SF	Permanent Pavement Markings, Non-Reflective at _____ Dollars & Cents per Square Foot				
35	P-620.2	110,000 SF	Permanent Pavement Markings, Reflective at _____ Dollars & Cents per Square Foot				
36	P-620.3	1,800 SF	Permanent Pavement Markings, Thermoplastic at _____ Dollars & Cents per Square Foot				
37	P-620.4	2,000 SF	Removal of Existing Pavement Markings at _____ Dollars & Cents per Square Foot				
38	P-621.1	25,000 SY	Runway Pavement Grooving at _____ Dollars & Cents per Square Yard				
39	F-162.1	2,500 LF	Temporary Fence – 8-ft Chain Link with Barb Wire at _____ Dollars & Cents per Linear Foot				
40	F-162.2	1,200 LF	Temporary Fence – 8-ft Barrier & Chain Link with Barb Wire at _____ Dollars & Cents per Linear Foot				

Rhode Island Airport Corporation
Phase 2 - Runway 34 End Safety Area, NAVAID Improvements, and Wetland Mitigation
T. F. Green State Airport
Warwick, Rhode Island
RIAC Construction Contract No. 24873
Volume 1 – Runway 34 End Safety Area and NAVAID Improvements
SCHEDULE OF PRICES
BASE BID

Item No.	Pay Item No.	Estimated Quantity	Item of Work With Unit Prices Written in Words	Figures			
				Unit Bid Price		Bid Amount	
				Dollars	Cents	Dollars	Cents
41	F-162.3	3,200 LF	New Fence – 8-ft Chain Link with Barb Wire at _____ Dollars & Cents per Linear Foot				
42	F-162.4	2,000 LF	Remove Existing Fence, Gate and Foundations at _____ Dollars & Cents per Linear Foot				
43	F-162.5	2 EA	8-foot Swing Gate at _____ Dollars & Cents per Each				
44	D-701.1	70 LF	Reinforced Concrete Pipe, 12-inch at _____ Dollars & Cents per Linear Foot				
45	D-701.2	593 LF	Reinforced Concrete Pipe, 18-inch at _____ Dollars & Cents per Linear Foot				
46	D-701.3	495 LF	Reinforced Concrete Pipe, 24-inch at _____ Dollars & Cents per Linear Foot				
47	D-701.4	620 LF	Reinforced Concrete Pipe, 24-inch, Perforated at _____ Dollars & Cents per Linear Foot				
48	D-701.5	341 LF	Reinforced Concrete Pipe, 30-inch at _____ Dollars & Cents per Linear Foot				
49	D-701.6	634 LF	Reinforced Concrete Pipe, 30-inch, Perforated at _____ Dollars & Cents per Linear Foot				
50	D-701.7	38 LF	Reinforced Concrete Pipe, 36-inch at _____ Dollars & Cents per Linear Foot				

Rhode Island Airport Corporation
Phase 2 - Runway 34 End Safety Area, NAVAID Improvements, and Wetland Mitigation
T. F. Green State Airport
Warwick, Rhode Island
RIAC Construction Contract No. 24873
Volume 1 – Runway 34 End Safety Area and NAVAID Improvements
SCHEDULE OF PRICES
BASE BID

Item No.	Pay Item No.	Estimated Quantity	Item of Work With Unit Prices Written in Words	Figures			
				Unit Bid Price		Bid Amount	
				Dollars	Cents	Dollars	Cents
51	D-701.8	240 LF	Ductile Iron Pipe, 36-inch at _____ Dollars & Cents per Linear Foot				
52	D-701.9	5,179 LF	Pipe Removal at _____ Dollars & Cents per Linear Foot				
53	D-701.10	360 LF	Reinforced Concrete Pipe, 15-inch at _____ Dollars & Cents per Linear Foot				
54	D-702.1	350 LF	Trench Drain at _____ Dollars & Cents per Linear Foot				
55	D-751.1	13 EA	Heavy Duty Drain Inlet Structure at _____ Dollars & Cents per Each				
56	D-751.2	5 EA	Alter Existing Drainage Structure at _____ Dollars & Cents per Each				
57	D-751.3	34 EA	Remove Existing Drainage Structure at _____ Dollars & Cents per Each				
58	D-751.4	3 EA	Heavy Duty Electrical Manhole at _____ Dollars & Cents per Each				
59	D-751.5	3 EA	Reset Electrical Manhole Frame/Cover at _____ Dollars & Cents per Each				
60	D-752.1	1 EA	RCP End Wall 36-inch Pipe at _____ Dollars & Cents per Each				
61	D-752.2	164 SY	Stone Riprap at Pipe Inlet/Outfall at _____ Dollars & Cents per Square Yard				

Rhode Island Airport Corporation
Phase 2 - Runway 34 End Safety Area, NAVAID Improvements, and Wetland Mitigation
T. F. Green State Airport
Warwick, Rhode Island
RIAC Construction Contract No. 24873
Volume 1 – Runway 34 End Safety Area and NAVAID Improvements
SCHEDULE OF PRICES
BASE BID

Item No.	Pay Item No.	Estimated Quantity	Item of Work With Unit Prices Written in Words	Figures			
				Unit Bid Price		Bid Amount	
				Dollars	Cents	Dollars	Cents
62	M-003.1	95,000 CF	Infiltration Trench – 1A at _____ Dollars & Cents per Cubic Foot				
63	M-003.2	30,000 CF	Infiltration Trench – 1B at _____ Dollars & Cents per Cubic Foot				
64	M-003.3	118,000 CF	Infiltration Trench – 2A at _____ Dollars & Cents per Cubic Foot				
65	M-003.4	49,000 CF	Infiltration Trench – 2B at _____ Dollars & Cents per Cubic Foot				
66	M-004.1	2 EA	Sand Filter at _____ Dollars & Cents per Each				
67	T-901.1	120,000 SY	Permanent Seeding at _____ Dollars & Cents per Square Yard				
68	T-901.2	62,000 SY	Temporary Seeding at _____ Dollars & Cents per Square Yard				
69	T-905.1	76,000 SY	Topsoil – Borrow (Min. 4" Depth) at _____ Dollars & Cents per Square Yard				
70	T-908.1	176,000 SY	Mulching at _____ Dollars & Cents per Square Yard				
71	X-105.1	53,000 SY	Geotextile, Class 4 at _____ Dollars & Cents per Square Yard				
72	X-106.1	50,000 SF	Sheet Piling at _____ Dollars & Cents per Square Foot				

Rhode Island Airport Corporation
Phase 2 - Runway 34 End Safety Area, NAVAID Improvements, and Wetland Mitigation
T. F. Green State Airport
Warwick, Rhode Island
RIAC Construction Contract No. 24873
Volume 1 – Runway 34 End Safety Area and NAVAID Improvements
SCHEDULE OF PRICES
BASE BID

Item No.	Pay Item No.	Estimated Quantity	Item of Work With Unit Prices Written in Words	Figures			
				Unit Bid Price		Bid Amount	
				Dollars	Cents	Dollars	Cents
73	X-107.1	2 EA	Groundwater Detention System at _____ Dollars & Cents per Each				
74	X-108.1	880 LF	10-inch Sewer Force Main with Cement Lining at _____ Dollars & Cents per Linear Foot				
75	X-108.2	860 LF	CLSM Pipe Fill at _____ Dollars & Cents per Linear Foot				
76	X-108.3	1 EA	Sewer Structure Removal at _____ Dollars & Cents per Linear Foot				
77	X-109.1	2 EA	Wastewater Combination Valve at _____ Dollars & Cents per Each				
78	X-110.1	1 EA	Service Cleanout at _____ Dollars & Cents per Each				
79	X-111.1	1 ALLOW	Filter Fabric Retention Basin at ____TWENTY THOUSAND_____ Dollars & Cents per Allowance	20,000	.00	20,000	.00
80	L-108-5.1	1 ALLOW	Trace & Identify Existing Cables at ____FIVE THOUSAND_____ Dollars & Cents per Allowance	5,000	.00	5,000	.00
81	L-108-5.2	6,400 LF	No. 8 AWG, 5KV Cable – Direct Bury at _____ Dollars & Cents per Linear Foot				
82	L-108-5.3	7,000 LF	No. 8 AWG, 5KV Cable Installed in Duct or Conduit at _____ Dollars & Cents per Linear Foot				

Rhode Island Airport Corporation
Phase 2 - Runway 34 End Safety Area, NAVAID Improvements, and Wetland Mitigation
T. F. Green State Airport
Warwick, Rhode Island
RIAC Construction Contract No. 24873
Volume 1 – Runway 34 End Safety Area and NAVAID Improvements
SCHEDULE OF PRICES
BASE BID

Item No.	Pay Item No.	Estimated Quantity	Item of Work With Unit Prices Written in Words	Figures			
				Unit Bid Price		Bid Amount	
				Dollars	Cents	Dollars	Cents
83	L-108-5.4	12,000 LF	No. 6 AWG Bare Counterpoise Wire Installed in Trench at _____ Dollars & Cents per Linear Foot				
84	L-108-5.5	4,000 LF	No. 2 AWG, Insulated 600V Cable Installed in Duct or Conduit at _____ Dollars & Cents per Linear Foot				
85	L-108-5.6	2,000 LF	No. 6G AWG, Insulated 600V Cable Installed in Duct or Conduit at _____ Dollars & Cents per Linear Foot				
86	L-108-5.7	6,300 LF	Remove Existing Cable in Conduit or Duct at _____ Dollars & Cents per Linear Foot				
87	L-108-5.8	10,000 LF	Remove Existing Direct Bury Cable at _____ Dollars & Cents per Linear Foot				
88	L-109-5.1	1 LS	Airport Lighting Control & Monitoring System Upgrade at _____ Dollars & Cents per Lump Sum				
89	L-110-5.1A	1,800 LF	Conduit, PVC, Type II, Schedule 40, 2” at _____ Dollars & Cents per Linear Foot				
90	L-110-5.1B	5,700 LF	Conduit, PVC, Type II, Schedule 40, 2” – Concrete Encased at _____ Dollars & Cents per Linear Foot				
91	L-110-5.1C	80 LF	2-Way Electrical Duct Bank – Concrete Encased at _____ Dollars & Cents per Linear Foot				

Rhode Island Airport Corporation
Phase 2 - Runway 34 End Safety Area, NAVAID Improvements, and Wetland Mitigation
T. F. Green State Airport
Warwick, Rhode Island
RIAC Construction Contract No. 24873
Volume 1 – Runway 34 End Safety Area and NAVAID Improvements
SCHEDULE OF PRICES
BASE BID

Item No.	Pay Item No.	Estimated Quantity	Item of Work With Unit Prices Written in Words	Figures			
				Unit Bid Price		Bid Amount	
				Dollars	Cents	Dollars	Cents
92	L-110-5.1D	170 LF	4-Way Electrical Duct Bank – Concrete Encased at _____ Dollars & Cents per Linear Foot				
93	L-110-5.2	4 EA	Cable/Conduit/Duct Bank Markers at _____ Dollars & Cents per Each				
94	L-110-5.3	6,300 LF	Removal of Electrical Conduit and Duct Bank at _____ Dollars & Cents per Linear Foot				
95	L-110-5.4	4 EA	Removal of Electrical Handhole/Junction Can at _____ Dollars & Cents per Each				
96	L-125-5.1A	16 EA	L-862 High Intensity Base Mounted Quartz Runway Edge Light Installed at _____ Dollars & Cents per Each				
97	L-125-5.1B	8 EA	L-862E High Intensity Base Mounted Quartz Runway End Light Installed at _____ Dollars & Cents per Each				
98	L-125-5.1C	66 EA	L-861T Medium Intensity Base Mounted Quartz Taxiway Edge Light Installed at _____ Dollars & Cents per Each				
99	L-125-5.1D	6 EA	Junction Base Cans at _____ Dollars & Cents per Each				
100	L-125-5.2	2 EA	Install New Airfield Guidance Sign at _____ Dollars & Cents per Each				

Rhode Island Airport Corporation
Phase 2 - Runway 34 End Safety Area, NAVAID Improvements, and Wetland Mitigation
T. F. Green State Airport
Warwick, Rhode Island
RIAC Construction Contract No. 24873
Volume 1 – Runway 34 End Safety Area and NAVAID Improvements
SCHEDULE OF PRICES
BASE BID

Item No.	Pay Item No.	Estimated Quantity	Item of Work With Unit Prices Written in Words	Figures			
				Unit Bid Price		Bid Amount	
				Dollars	Cents	Dollars	Cents
101	L-125-5.3	29 EA	Airfield Guidance Sign Panel Replacement at _____ Dollars & Cents per Each				
102	L-125-5.4	2 EA	Install Pavement Sensors at _____ Dollars & Cents per Each				
103	L-125-5.5A	40 EA	Remove Existing Light at _____ Dollars & Cents per Each				
104	L-125-5.5B	48 EA	Remove Existing Light & Base Can at _____ Dollars & Cents per Each				
105	L-125-5.6	2 EA	Remove Existing Airfield Guidance Sign at _____ Dollars & Cents per Each				
106	L-125-5.7	1 EA	Relocate Existing Distance Remaining Sign at _____ Dollars & Cents per Each				
107	L-127-5.1	1 SET	Install New Precision Approach Path Indicator (PAPI) at _____ Dollars & Cents per Set				
108	L-127-5.2	1 LS	Install New Precision Approach Path Indicator (PAPI) Wireless Controls at _____ Dollars & Cents per Lump Sum				
109	L-127-5.3	1 SET	Remove Existing Visual Approach Slope Indicator (VASI) at _____ Dollars & Cents per Set				
110	L-127-5.4	1 ALLOW	Utility Fees at ____TWO THOUSAND_____ Dollars & Cents per Allowance	2,000	.00	2,000	.00

Rhode Island Airport Corporation
Phase 2 - Runway 34 End Safety Area, NAVAID Improvements, and Wetland Mitigation
T. F. Green State Airport
Warwick, Rhode Island
RIAC Construction Contract No. 24873
Volume 1 – Runway 34 End Safety Area and NAVAID Improvements
SCHEDULE OF PRICES
BASE BID

Item No.	Pay Item No.	Estimated Quantity	Item of Work With Unit Prices Written in Words	Figures			
				Unit Bid Price		Bid Amount	
				Dollars	Cents	Dollars	Cents
111	L-853-5.1	62 EA	Retroreflective Edge Markers at _____ Dollars & Cents per Each				
112	M-002.1	1 LS	FAA – MALSR – Phase A at _____ Dollars & Cents per Lump Sum				
113	M-002.2	1 LS	FAA – MALSR – Phase B at _____ Dollars & Cents per Lump Sum				
114	M-002.3	1 LS	FAA – EFGS – Phase A at _____ Dollars & Cents per Lump Sum				
115	M-002.4	1 LS	FAA – EFGS – Phase B at _____ Dollars & Cents per Lump Sum				

BID FORM – ADDENDUM NO.2, April 16, 2014

Rhode Island Airport Corporation
Phase 2 - Runway 34 End Safety Area, NAVAID Improvements, and Wetland Mitigation
T. F. Green State Airport
Warwick, Rhode Island
RIAC Construction Contract No. 24873
Volume 2 – Wetland Mitigation
SCHEDULE OF PRICES
BASE BID

Item No.	Pay Item No.	Estimated Quantity	Item of Work With Unit Prices Written in Words	Figures			
				Unit Bid Price		Bid Amount	
				Dollars	Cents	Dollars	Cents
			GENERAL				
1	212-2	1 ALLOW	Cleaning and Maintenance of Erosion Controls at ____TEN THOUSAND_____ Dollars & Cents per Allowance	10,000	.00	10,000	.00
2	L07-1	8 Month	Extended Establishment Period – All Sites at _____ Dollars & Cents per Month				
SITE 1							
3	201-1	2.91 Acre	Clearing and Grubbing at _____ Dollars & Cents per Acre				
4	202-1	25,530 CY	Unclassified Excavation at _____ Dollars & Cents per Cubic Yards				
5	202-2	100 CY	Gravel Borrow at _____ Dollars & Cents per Cubic Yards				
6	206-1	2,714 LF	Single Compost Filter Tube at _____ Dollars & Cents per Linear Feet				
7	211-1	120 SY	Construction Access at _____ Dollars & Cents per Square Yards				
8	L01-1	2,200 SY	6" M.18.02 Plantable Soil at _____ Dollars & Cents per Square Yards				
9	L01-2	12,000 SY	12" High Organic – Texture Soil at _____ Dollars & Cents per Square Yards				

Rhode Island Airport Corporation
Phase 2 - Runway 34 End Safety Area, NAVAID Improvements, and Wetland Mitigation
T. F. Green State Airport
Warwick, Rhode Island
RIAC Construction Contract No. 24873
Volume 2 – Wetland Mitigation
SCHEDULE OF PRICES
BASE BID

Item No.	Pay Item No.	Estimated Quantity	Item of Work With Unit Prices Written in Words	Figures			
				Unit Bid Price		Bid Amount	
				Dollars	Cents	Dollars	Cents
10	L02-1	2,200 SY	Aviation Seed Mix at _____ Dollars and Cents per Square Yards				
11	L02-8	12,000 SY	Wetlands Seed Mix (Type 5) at _____ Dollars and Cents per Square Yards				
12	L04-1	0.25 Acre	Refertilization of Seeded and Grassed Areas at _____ Dollars & Cents per Acre				
13	L05-1	2.91 Acre	Straw Mulch at _____ Dollars & Cents per Acre				
14	L06-1	1,071 EA	Clethra Alnifolia at _____ Dollars and Cents per Each				
15	L06-2	735 EA	Alnus Rugosa at _____ Dollars & Cents per Each				
16	L06-3	343 EA	Salix Discolor at _____ Dollars & Cents per Each				
17	SP-05-1	2,200 SY	Coir Fiber Erosion Control Slope Matting at _____ Dollars & Cents per Square Yards				
18	SP-08-1	1 LS	Control of Invasive Plants Existing on Site at _____ Dollars & Cents per Lump Sum				
SITE 2							
19	201-1	475 SY	Clearing and Grubbing at _____ Dollars & Cents per Square Yards				

Rhode Island Airport Corporation
Phase 2 - Runway 34 End Safety Area, NAVAID Improvements, and Wetland Mitigation
T. F. Green State Airport
Warwick, Rhode Island
RIAC Construction Contract No. 24873
Volume 2 – Wetland Mitigation
SCHEDULE OF PRICES
BASE BID

Item No.	Pay Item No.	Estimated Quantity	Item of Work With Unit Prices Written in Words	Figures			
				Unit Bid Price		Bid Amount	
				Dollars	Cents	Dollars	Cents
20	201-6	800 SY	R&D Flexible Pavement at _____ Dollars & Cents per Square Yards				
21	201-7	250 LF	R&D Pipe – All Sizes at _____ Dollars & Cents per Linear Feet				
22	201-8	250 LF	R&D Guardrail and Posts – All Types at _____ Dollars & Cents per Linear Feet				
23	201-9	2 EA	R&D Headwall at _____ Dollars & Cents per Each				
24	203-1	20 CY	Structural Excavation - Muck at _____ Dollars & Cents per Cubic Yards				
25	203-2	575 CY	Structural Excavation - Unclassified at _____ Dollars & Cents per Cubic Yards				
26	203-3	100 CY	Crushed Stone Fill Under Structures at _____ Dollars & Cents per Cubic Yards				
27	203-4	75 CY	Pervious Fill at _____ Dollars & Cents per Cubic Yards				
28	204-1	1,300 SY	Trimming and Fine Grading at _____ Dollars & Cents per Square Yards				
29	206-2	560 LF	Single Compost Filter Tube at _____ Dollars & Cents per Linear Feet				

Rhode Island Airport Corporation
Phase 2 - Runway 34 End Safety Area, NAVAID Improvements, and Wetland Mitigation
T. F. Green State Airport
Warwick, Rhode Island
RIAC Construction Contract No. 24873
Volume 2 – Wetland Mitigation
SCHEDULE OF PRICES
BASE BID

Item No.	Pay Item No.	Estimated Quantity	Item of Work With Unit Prices Written in Words	Figures			
				Unit Bid Price		Bid Amount	
				Dollars	Cents	Dollars	Cents
30	208-1	1 LS	Temporary Stream Diversion and Dewatering at _____ Dollars & Cents per Lump Sum				
31	209-1	24 LF	Baled Hay Catch Basin Inlet Protection (STD 9.8.0) at _____ Dollars & Cents per Linear Feet				
32	212-1	1 ALLOW	Cleaning & Maintenance of Erosion Controls at ____TEN THOUSAND_____ Dollars & Cents per Allowance	10,000	.00	10,000	.00
33	302-1	350 CY	Gravel Borrow Subbase Course at _____ Dollars & Cents per Cubic Yards				
34	401-1	210 Ton	Bituminous Base Course at _____ Dollars & Cents per Ton				
35	401-2	105 Ton	Bituminous Binder Course at _____ Dollars & Cents per Ton				
36	401-3	105 Ton	Bituminous Surface Course Type I-1 at _____ Dollars & Cents per Ton				
37	403-1	1,815 SY	Asphalt Emulsion Tack Coat at _____ Dollars & Cents per Square Yards				
38	701-1	1 LS	Installation and Inspection of Water Facilities – Warwick Water Department at _____ Dollars & Cents per Lump Sum				

Rhode Island Airport Corporation
Phase 2 - Runway 34 End Safety Area, NAVAID Improvements, and Wetland Mitigation
T. F. Green State Airport
Warwick, Rhode Island
RIAC Construction Contract No. 24873
Volume 2 – Wetland Mitigation
SCHEDULE OF PRICES
BASE BID

Item No.	Pay Item No.	Estimated Quantity	Item of Work With Unit Prices Written in Words	Figures			
				Unit Bid Price		Bid Amount	
				Dollars	Cents	Dollars	Cents
39	701-2	1 ALLOW	Installation and Inspection of Water Facilities – Warwick Water Department – Overtime Work at ___FOUR THOUSAND_____ Dollars & Cents per Allowance	4,000	.00	4,000	.00
40	701-3	4 EA	Furnish and Install Waterline Support Assemblies at_____ Dollars & Cents per Each				
41	701-4	4 EA	Furnish and Install Gas Pipe Steel Support Assemblies at _____ Dollars & Cents per Each				
42	800-1	1 LS	Precast Reinforced Concrete Box Culvert and Wingwalls at _____ Dollars & Cents per Lump Sum				
43	901-1	430 LF	Guardrail Steel Beam Single Face at _____ Dollars & Cents per Linear Feet				
44	901-2	4 EA	Terminal End Section Single Face (STD 34.3.2) at _____ Dollars & Cents per Each				
45	907-1	30 MGAL	Water for Dust Control at _____ Dollars & Cents per Million Gallons				
46	914-1	750 HR	Traffic Person (Uniformed Flagger) at _____ Dollars & Cents per Hour				
47	920-1	225 SY	Placed Stone RIPRAP R-6, R-7, R-8 at _____ Dollars & Cents per Square Yards				

Rhode Island Airport Corporation
Phase 2 - Runway 34 End Safety Area, NAVAID Improvements, and Wetland Mitigation
T. F. Green State Airport
Warwick, Rhode Island
RIAC Construction Contract No. 24873
Volume 2 – Wetland Mitigation
SCHEDULE OF PRICES
BASE BID

Item No.	Pay Item No.	Estimated Quantity	Item of Work With Unit Prices Written in Words	Figures			
				Unit Bid Price		Bid Amount	
				Dollars	Cents	Dollars	Cents
48	920-2	225 SY	Bedding for RIPRAP FS-3 (STD 8.3.0) at _____ Dollars & Cents per Square Yards				
49	920-3	225 SY	Filter Fabric for RIPRAP at _____ Dollars & Cents per Square Yards				
50	922-1	200 SF	Temporary Construction Sign at _____ Dollars & Cents per Square Feet				
51	923-1	2,000 BARRELS /DAY	Drum Barricade Standard 26.2.0 at _____ Dollars & Cents per Barrels Per Day				
52	924-1	3 MONTH	Trailer Mounted Portable Traffic Control Signal at _____ Dollars & Cents per Mouth				
53	925-1	150 PDAY	Portable Changeable Message Sign at _____ Dollars & Cents per Day				
54	926-1	130 LF	Precast Median Barrier for Temporary Traffic Control (STD 40.5.0) at _____ Dollars & Cents per Linear Feet				
55	927-1	260 LF	Relocate Precast Median Barrier for Temporary Traffic Control at _____ Dollars & Cents per Linear Feet				
56	931-1	3,000 HSY	Cleaning and Sweeping Pavement at _____ Dollars & Cents per Hundred Square Feet				
57	932-1	75 LF	Full Depth Sawcut of Bituminous Pavement at _____ Dollars & Cents per Linear Feet				

Rhode Island Airport Corporation
Phase 2 - Runway 34 End Safety Area, NAVAID Improvements, and Wetland Mitigation
T. F. Green State Airport
Warwick, Rhode Island
RIAC Construction Contract No. 24873
Volume 2 – Wetland Mitigation
SCHEDULE OF PRICES
BASE BID

Item No.	Pay Item No.	Estimated Quantity	Item of Work With Unit Prices Written in Words	Figures			
				Unit Bid Price		Bid Amount	
				Dollars	Cents	Dollars	Cents
58	937-1	1 LS	Maintenance and Movement of Traffic Protection at _____ Dollars & Cents per Lump Sum				
59	L01-3	250 SY	Plantable Soil 4" Deep at _____ Dollars & Cents per Square Yards				
60	L02-2	250 SY	General Highway Seeding at _____ Dollars & Cents per Square Yards				
61	T20-1	1,000 LF	Temporary Waterbourne Pavement Marking White – 4 Inch at _____ Dollars & Cents per Linear Feet				
62	T20-2	750 LF	4" Epoxy Resin Pavement Marking Yellow at _____ Dollars & Cents per Linear Feet				
SITE 3							
63	201-3	2.58 Acre	Clearing and Grubbing at _____ Dollars & Cents per Acre				
64	201-10	150 LF	R&D Pipe – All Sizes at _____ Dollars & Cents per Linear Feet				
65	201-11	301 LF	Remove and Dispose Chain Link Fence at _____ Dollars & Cents per Linear Feet				
66	201-12	1 EA	Remove and Re-Install Concrete Block Fish Grate Structure at _____ Dollars & Cents per Each				
67	202-3	8,600 CY	Unclassified Excavation at _____ Dollars & Cents per Cubic Yards				

Rhode Island Airport Corporation
Phase 2 - Runway 34 End Safety Area, NAVAID Improvements, and Wetland Mitigation
T. F. Green State Airport
Warwick, Rhode Island
RIAC Construction Contract No. 24873
Volume 2 – Wetland Mitigation
SCHEDULE OF PRICES
BASE BID

Item No.	Pay Item No.	Estimated Quantity	Item of Work With Unit Prices Written in Words	Figures			
				Unit Bid Price		Bid Amount	
				Dollars	Cents	Dollars	Cents
68	202-4	2.390 CY	On-Site Wetland Fill at _____ Dollars & Cents per Cubic Yards				
69	202-5	500 CY	Gravel Borrow at _____ Dollars & Cents per Cubic Yards				
70	206-3	5,950 LF	Single Compost Filter Tube at _____ Dollars & Cents per Linear Feet				
71	208-2	1 LS	Temporary Stream Diversion and Dewatering at _____ Dollars & Cents per Lump Sum				
72	211-2	240 SY	Construction Access at _____ Dollars & Cents per Square Yards				
73	903-1	130 LF	Remove and Replace Chain Link Fence at _____ Dollars & Cents per Linear Feet				
74	903-2	1 EA	Pedestrian Gate in Chain Link Fence at _____ Dollars & Cents per Each				
75	L01-4	1,100 SY	6" M.18.02 Plantable Soil at _____ Dollars & Cents per Square Yards				
76	920-4	100 SY	Placed Stone Riprap R-4 at _____ Dollars & Cents per Square Yards				
77	920-5	100 SY	Bedding for Riprap FS-3 (STD 8.3.0) at _____ Dollars & Cents per Square Yards				

Rhode Island Airport Corporation
Phase 2 - Runway 34 End Safety Area, NAVAID Improvements, and Wetland Mitigation
T. F. Green State Airport
Warwick, Rhode Island
RIAC Construction Contract No. 24873
Volume 2 – Wetland Mitigation
SCHEDULE OF PRICES
BASE BID

Item No.	Pay Item No.	Estimated Quantity	Item of Work With Unit Prices Written in Words	Figures			
				Unit Bid Price		Bid Amount	
				Dollars	Cents	Dollars	Cents
78	920-6	100 SY	Filter Fabric for Riprap at _____ Dollars & Cents per Square Yards				
79	L01-5	2,400 SY	12" High Organic – Texture Soil at _____ Dollars & Cents per Square Yards				
80	L02-3	1,100 SY	Native Seed Mix (Type 4) at _____ Dollars & Cents per Square Yards				
81	L02-4	9,600 SY	Wetland Seed Mix (Type 5A) at _____ Dollars & Cents per Square Yards				
82	L04-2	0.22 Acre	Refertilization of Seeded and Grassed Areas at _____ Dollars & Cents per Acre				
83	L05-2	2.58 Acre	Straw Mulch at _____ Dollars & Cents per Acre				
84	L06-4	290 EA	Alnus Rugosa at _____ Dollars & Cents per Each				
85	L06-5	60 EA	Salix Nigra at _____ Dollars & Cents per Each				
86	L06-6	290 EA	Cornus Amomum at _____ Dollars & Cents per Each				
87	L06-7	120 EA	Sambucus Canadensis at _____ Dollars & Cents per Each				

Rhode Island Airport Corporation
Phase 2 - Runway 34 End Safety Area, NAVAID Improvements, and Wetland Mitigation
T. F. Green State Airport
Warwick, Rhode Island
RIAC Construction Contract No. 24873
Volume 2 – Wetland Mitigation
SCHEDULE OF PRICES
BASE BID

Item No.	Pay Item No.	Estimated Quantity	Item of Work With Unit Prices Written in Words	Figures			
				Unit Bid Price		Bid Amount	
				Dollars	Cents	Dollars	Cents
88	L06-8	220 EA	Viburnum Dentatum at _____ Dollars & Cents per Each				
89	L06-9	25 EA	Nyssa Sylvatica at _____ Dollars & Cents per Each				
90	L06-10	60 EA	Ilex Verticillita at _____ Dollars & Cents per Each				
91	L06-11	60 EA	Vaccinium Corymbosum at _____ Dollars & Cents per Each				
92	L11-1	6 EA	Preserve Tree at _____ Dollars & Cents per Each				
93	SP-03-1	4 EA	Log Vane at _____ Dollars & Cents per Each				
94	SP-04-1	6 EA	Rootwad at _____ Dollars & Cents per Each				
95	SP-05-2	1,100 SY	Coir Fiber Erosion Control Slope Matting at _____ Dollars & Cents per Square Yards				
96	SP-06-1	336 CY	Cobble-Gravel-Sand Material for Streambed at _____ Dollars & Cents per Cubic Yards				
97	SP-08-2	1 LS	Control of Invasive Plants Existing On Site at _____ Dollars & Cents per Lump Sum				
SITE 14							

Rhode Island Airport Corporation
Phase 2 - Runway 34 End Safety Area, NAVAID Improvements, and Wetland Mitigation
T. F. Green State Airport
Warwick, Rhode Island
RIAC Construction Contract No. 24873
Volume 2 – Wetland Mitigation
SCHEDULE OF PRICES
BASE BID

Item No.	Pay Item No.	Estimated Quantity	Item of Work With Unit Prices Written in Words	Figures			
				Unit Bid Price		Bid Amount	
				Dollars	Cents	Dollars	Cents
98	201-4	0.60 Acre	Clearing and Grubbing at _____ Dollars & Cents per Acre				
99	202-6	2,330 CY	Unclassified Excavation at _____ Dollars & Cents per Cubic Yards				
100	202-7	5 CY	Gravel Borrow at _____ Dollars & Cents per Cubic Yards				
101	206-4	770 LF	Single Compost Filter Tube at _____ Dollars & Cents per Linear Feet				
102	L01-6	2,900 CY	12” High Organic – Texture Soil at _____ Dollars & Cents per Cubic Yards				
103	L02-5	150 SY	Wetland Seed Mix (Type 5) at _____ Dollars & Cents per Square Yards				
104	L02-6	1,400 SY	Aviation Seed Mix at _____ Dollars & Cents per Square Yards				
105	L04-3	0.60 Acre	Refertilization of Seeded and Grassed Areas at _____ Dollars & Cents per Acre				
106	L05-3	0.60 Acre	Straw Mulch at _____ Dollars & Cents per Acre				
107	L06-12	87 EA	Clethra Alnifolia at _____ Dollars & Cents per Each				

Rhode Island Airport Corporation
Phase 2 - Runway 34 End Safety Area, NAVAID Improvements, and Wetland Mitigation
T. F. Green State Airport
Warwick, Rhode Island
RIAC Construction Contract No. 24873
Volume 2 – Wetland Mitigation
SCHEDULE OF PRICES
BASE BID

Item No.	Pay Item No.	Estimated Quantity	Item of Work With Unit Prices Written in Words	Figures			
				Unit Bid Price		Bid Amount	
				Dollars	Cents	Dollars	Cents
108	L06-13	63 EA	Alnus Rugosa at _____ Dollars & Cents per Each				
109	L06-14	62 EA	Salix Discolor at _____ Dollars & Cents per Each				
110	SP-08-3	1 LS	Control of Invasive Plants Existing On Site at _____ Dollars & Cents per Lump Sum				
SITE 15							
111	201-5	0.35 Acre	Clearing and Grubbing at _____ Dollars & Cents per Acre				
112	202-8	790 CY	Unclassified Excavation at _____ Dollars & Cents per Cubic Yards				
113	903-3	16 LF	Remove and Dispose of Chain Link Fence at _____ Dollars & Cents per Linear Feet				
114	903-4	1 EA	16” Wide Swing Gate (8” High with Barbed Wire) at _____ Dollars & Cents per Each				
115	L01-7	450 SY	M18.10.3 RIDOT Slope Mix at _____ Dollars & Cents per Square Yards				
116	L01-8	900 SY	12” High Organic – Texture Soil at _____ Dollars & Cents per Square Yards				
117	L02-7	400 SY	Wetland Seed Mix (Type 5A) at _____ Dollars & Cents per Square Yards				

Rhode Island Airport Corporation
Phase 2 - Runway 34 End Safety Area, NAVAID Improvements, and Wetland Mitigation
T. F. Green State Airport
Warwick, Rhode Island
RIAC Construction Contract No. 24873
Volume 2 – Wetland Mitigation
SCHEDULE OF PRICES
BASE BID

Item No.	Pay Item No.	Estimated Quantity	Item of Work With Unit Prices Written in Words	Figures			
				Unit Bid Price		Bid Amount	
				Dollars	Cents	Dollars	Cents
118	L04-4	0.35 Acre	Refertilization of Seeded and Grassed Areas at _____ Dollars & Cents per Acre				
119	L05-4	0.35 Acre	Straw Mulch at _____ Dollars & Cents per Acre				
120	L06-15	140 EA	Alnus Rugosa at _____ Dollars & Cents per Each				
121	L06-16	120 EA	Cornus Amomum at _____ Dollars & Cents per Each				
122	L06-17	30 EA	Viburnum Dentatum at _____ Dollars & Cents per Each				
123	SP-02-1	1 LS	Rock Cross Vane at _____ Dollars & Cents per Lump Sum				
124	SP-03-2	1 EA	Log Vane at _____ Dollars & Cents per Each				
125	SP-04-2	2 EA	Rootwad at _____ Dollars & Cents per Each				
126	SP-05-3	516 SY	Coir Fiber Erosion Control Slope Matting at _____ Dollars & Cents per Square Yards				
127	SP-05A-1	110 LF	Coir Log at _____ Dollars & Cents per Linear Feet				

ITEM P-152
EXCAVATION AND EMBANKMENT

DESCRIPTION

152-1.1 This item covers excavation, disposal, placement, and compaction of all materials within the limits of the work required to construct runway safety areas, runways, taxiways, aprons, and intermediate as well as other areas for drainage, building construction, parking, or other purposes in accordance with these specifications and in conformity to the dimensions and typical section shown on the plans.

152-1.2 CLASSIFICATION. All material excavated shall be classified as defined below:

a. Unclassified Excavation. Unclassified excavation shall consist of the excavation and disposal of all material, regardless of its nature, which is not otherwise classified and paid for under the following items. All building foundations and utility structures encountered during excavation shall be removed as part of this work. All building foundations shall be removed to a depth of two feet below the final pavement subgrade (or final grade elevation in non-pavement areas).

b. Rock Excavation. Rock excavation shall include all solid rock in ledges, in bedded deposits, in unstratified masses, and conglomerate deposits which are so firmly cemented they cannot be removed without blasting or using rippers. All boulders containing a volume of more than 1/2 cubic yard will be classified as ``rock excavation."

c. Muck Excavation. Muck excavation shall consist of the removal and disposal of deposits of mixtures of soils and organic matter not suitable for foundation material. Muck shall include materials, which will decay or produce subsidence in the embankment. It may be made up of decaying stumps, roots, logs, humus, or other material not satisfactory for incorporation in the embankment.

d. Foreign Borrow. Foreign Borrow fill material shall conform the Common Borrow material using RIDOT specifications (Material M.01.01) for the top 6 feet of the subgrade embankment. This specification states the material should be gravelly in nature with the following minimum test requirements: Boulders (retained on a 3-inch sieve) up to 9 inches in diameter. The material shall also contain not more than 17 percent by weight passing the No. 200 sieve. For below the top 6 feet of subgrade embankment and fill, the maximum boulder size can be increase to 12 inches in diameter, but still contain not more than 17 percent by weight passing the No. 200 sieve.

152-1.3 Unsuitable Excavation. Any material containing vegetable or organic matter, such as muck, peat, organic silt, or sod shall be considered unsuitable for use in embankment construction. Material, when approved by the Engineer as suitable to support vegetation, may be used on the embankment slope.

152-1.4 Existing Sewer Structure Removals. The Existing Sewer Structure shall be removed within the limits of the project as designated on the Plans or as directed by the Engineer. Existing Sewer Structure removals shall include removal of all sewer structure materials and restore the

excavations with backfill material.

CONSTRUCTION METHODS

152-2.1 General. Before beginning excavation, grading, and embankment operations in any area, the area shall be completely cleared and grubbed in accordance with Item P-151.

The suitability of material to be placed in embankments shall be subject to approval by the Engineer. All unsuitable material shall be disposed of in waste areas shown on the plans. All waste areas shall be graded to allow positive drainage of the area and of adjacent areas. The surface elevation of waste areas shall not extend above the surface elevation of adjacent usable areas of the airport, unless specified on the plans or approved by the Engineer.

When the Contractor's excavating operations encounter artifacts of historical or archaeological significance, the operations shall be temporarily discontinued. At the direction of the Engineer, the Contractor shall excavate the site in such a manner as to preserve the artifacts encountered and allow for their removal. Such excavation will be paid for as extra work.

Those areas outside of the pavement areas in which the top layer of soil material has become compacted, by hauling or other activities of the Contractor shall be scarified and disked to a depth of 4 inches, in order to loosen and pulverize the soil.

If it is necessary to interrupt existing surface drainage, sewers or under-drainage, conduits, utilities, or similar underground structures the Contractor shall be responsible for and shall take all necessary precautions to preserve them or provide temporary services. When such facilities are encountered, the Contractor shall notify the Engineer, who shall arrange for their removal if necessary. The Contractor shall, at his/her own expense, satisfactorily repair or pay the cost of all damage to such facilities or structures which may result from any of the Contractor's operations during the period of the contract.

152-2.2 EXCAVATION. No excavation shall be started until the work has been staked out by the Contractor and the Engineer has obtained elevations and measurements of the ground surface. All suitable excavated material shall be used in the formation of embankment, subgrade, or for other purposes shown on the plans. All unsuitable material shall be disposed of as shown on the plans.

When the volume of the excavation exceeds that required to construct the embankments to the grades indicated, the excess shall be used to grade the areas of ultimate development or disposed of as directed. When the volume of excavation is not sufficient for constructing the fill to the grades indicated, the deficiency shall be obtained from borrow areas.

The grade shall be maintained so that the surface is well drained at all times. When necessary, temporary drains and drainage ditches shall be installed to intercept or divert surface water, which may affect the work.

a. Selective Grading. When selective grading is indicated on the plans, the more suitable material as designated by the Engineer shall be used in constructing the embankment or in capping the pavement subgrade. If, at the time of excavation, it is not possible to place this material in its

final location, it shall be stockpiled in approved areas so that it can be measured for payment for rehandling as specified in paragraph 3.3.

b. Undercutting. Rock, shale, hardpan, loose rock, boulders, or other material unsatisfactory for runway safety areas, subgrades, roads, shoulders, or any areas intended for turfing shall be excavated to a minimum depth of 12 inches, or to the depth specified by the Engineer, below the subgrade. Muck, peak, matted roots, or other yielding material, unsatisfactory for subgrade foundation, shall be removed to the depth specified. Unsuitable materials shall be disposed of at locations shown on the plans. This excavated material shall be paid for at the contract unit price per cubic yard for "Unclassified Excavation". The excavated area shall be refilled with suitable material, obtained from the grading operations or borrow areas and thoroughly compacted by rolling. The necessary refilling will constitute a part of the embankment. Where rock cuts are made and refilled with selected material, any pockets created in the rock surface shall be permanently drained.

c. Overbreak. Overbreak, including slides, is that portion of any material displaced or loosened beyond the finished work as planned or authorized by the Engineer. The Engineer shall determine if the displacement of such material was unavoidable and his/her decision shall be final. All overbreak shall be graded or removed by the Contractor and disposed of as directed; however, payment will not be made for the removal and disposal of overbreak which the Engineer determines as avoidable. Unavoidable overbreak will be classified as "Unclassified Excavation."

d. Removal of Utilities. The removal of existing structures and utilities required to permit the orderly progress of work shall be classified as "Unclassified Excavation", unless otherwise designated herein. Existing utility structures determined to be in good condition by the Engineer shall be salvaged to the Airport and delivered to a location on Airport. Payment for salvage and delivery of utility structures shall be incidental to the item Unclassified Excavation. All existing foundations shall be excavated for at least 2 feet below the top of subgrade or as indicated on the plans, and the material disposed of as directed. All foundations thus excavated shall be backfilled with suitable material and compacted as specified herein.

e. Compaction Requirements. The subgrade under areas to be paved shall be compacted to the depths and densities shown in the following table as determined by ASTM D-1557.

Depth Below Subgrade	Required Percent of Maximum Density
0 – 21"	100 %
21" – 36"	95 %
36" – 55"	90 %
55" – 70"	85 %

The in-place field density shall be determined in accordance with ASTM D 1556 or ASTM D 2167. Stones or rock fragments larger than 4 inches in their greatest dimension will not be permitted in top 6 inches of the subgrade. The finished grading operations, conforming to the typical cross section, shall be completed and maintained at least 1,000 feet ahead of the paving operations or as directed by the Engineer.

In cuts, all loose or protruding rocks on the back slopes shall be bared loose or otherwise removed

to line of finished grade of slope. All cut-and-fill slopes shall be uniformly dressed to the slope, cross section, and alignment shown on the plans or as directed by the Engineer.

No blasting will be permitted for this project.

152-2.3 BORROW EXCAVATION. Borrow area(s) within the airport property are indicated on the plans. Borrow excavation shall be made only at these designated locations and within the horizontal and vertical limits as staked or as directed.

When borrow sources are outside the boundaries of the airport property, it shall be the Contractor's responsibility to locate and obtain the supply, subject to the approval of the Engineer. The Contractor shall notify the Engineer, at least 15 days prior to beginning the excavation, so necessary measurements and tests can be made. All unsuitable material shall be disposed of by the Contractor. All borrow pits shall be opened up to expose the vertical face of various strata of acceptable material to enable obtaining a uniform product. Borrow pits shall be excavated to regular lines to permit accurate measurements, and they shall be drained and left in a neat, presentable condition with all slopes dressed uniformly.

152-2.4 DRAINAGE EXCAVATION. Drainage excavation shall consist of excavating for drainage ditches such as intercepting, inlet or outlet, for temporary levee construction; or for any other type as designed or as shown on the plans. The work shall be performed in the proper sequence with the other construction. All satisfactory material shall be placed in fills; unsuitable material shall be placed in waste areas or as directed. Intercepting ditches shall be constructed prior to starting adjacent excavation operations. All necessary work shall be performed to secure a finish true to line, elevation, and cross section.

The Contractor shall maintain ditches constructed on the project to the required cross section and shall keep them free of debris or obstructions until the project is accepted.

152-2.5 PREPARATION OF EMBANKMENT AREA. Where an embankment is to be constructed to a height of 4 feet or less, all sod and vegetable matter shall be removed from the surface upon which the embankment is to be placed, and the cleared surface shall be completely broken up by plowing or scarifying to a minimum depth of 6 inches. This area shall then be compacted as indicated in paragraph 2.6. When the height of fill is greater than 4 feet, sod not required to be removed shall be thoroughly disked and recompacted to the density of the surrounding ground before construction of embankment.

Where embankments are to be placed on natural slopes steeper than 3 to 1, horizontal benches shall be constructed.

No direct payment shall be made for the work performed under this section. The necessary clearing and grubbing and the quantity of excavation removed will be paid for under the respective items of work.

152-2.6 FORMATION OF EMBANKMENTS. Embankments shall be formed in successive horizontal layers of not more than 8 inches in loose depth for the full width of the cross section, unless otherwise approved to the Engineer.

The grading operations shall be conducted, and the various soil strata shall be placed, to produce a soil structure a shown on the typical cross section or as directed. Materials such as brush, hedge, roots, stumps, grass and other organic matter, shall not be incorporated or buried in the embankment.

Operations on earthwork shall be suspended at any time when satisfactory results cannot be obtained because of rain, freezing, or other unsatisfactory conditions of the field. The Contractor shall drag, blade, or slope the embankment to provide proper surface drainage.

The material in the layer shall be within +/-2 percent of optimum moisture content before rolling to obtain the prescribed compaction. In order to achieve a uniform moisture content throughout the layer, wetting or drying of the material and manipulation shall be required when necessary. Should the material be too wet to permit proper compaction or rolling, all work on all of the affected portions of the embankment shall be delayed until the material has dried to the required moisture content. Sprinkling of dry material to obtain the proper moisture content shall be done with approved equipment that will sufficiently distribute the water. Sufficient equipment to furnish the required water shall be available at all times. Samples of all embankment materials for testing, both before and after placement and compaction, will be taken for each 1000 cubic yards of material placed per layer. Based on these tests, the Contractor shall make the necessary corrections and adjustments in methods, materials or moisture content in order to achieve the correct embankment density.

Rolling operations shall be continued until the embankment is compacted to not less than 95 percent of maximum density for noncohesive soils, and 90 percent of maximum density for cohesive soils as determined by ASTM D-1557. Under all areas to be paved, the embankments shall be compacted to a depth of 21 inches and to a density of not less than 100 % percent of the maximum density as determined by ASTM D-1557.

On all areas outside of the pavement areas, no compaction will be required on the top 4 inches.

The in-place field density shall be determined in accordance with ASTM D 1556 or ASTM D 2167.

Compaction areas shall be kept separate, and no layer shall be covered by another until the proper density is obtained.

During construction of the embankment, the Contractor shall route his/her equipment at all times, both when loaded and when empty, over the layers as they are placed and shall distribute the travel evenly over the entire width of the embankment. The equipment shall be operated in such a manner that hardpan, cemented gravel, clay, or other chunky soil material will be broken up into small particles and become incorporated with the other material in the layer.

In the construction of embankments, layer placement shall begin in the deepest portion of the fill; as placement progresses, layers shall be constructed approximately parallel to the finished pavement grade line.

When rock and other embankment material are excavated at approximately the same, time, the rock shall be incorporated into the outer portion of the embankment and the other material shall be

incorporated under the future paved areas. Stones or fragmentary rock larger than 4 inches in their greatest dimensions will not be allowed in the top 6 inches of the subgrade. Rockfill shall be brought up in layers as specified or as directed and every effort shall be exerted to fill the voids with the finer material forming a dense, compact mass. Rock or boulders shall not be disposed of outside the excavation or embankment areas, except at places and in the manner designated by the Engineer

When the excavated material consists predominantly of rock fragments of such size that the material cannot be placed in layers of the prescribed thickness without crushing, pulverizing or further breaking down the pieces, such material may be placed in the embankment as directed in layers, not exceeding 2 feet in thickness. Each layer shall be leveled and smoothed with suitable leveling equipment and by distribution of spalls and finer fragments of rock. These type lifts shall not be constructed above an elevation 4 feet below the finished subgrade. Density requirements will not apply to portions of embankments constructed of materials, which cannot be tested in accordance with specified methods.

Frozen material shall not be placed in the embankment nor shall embankment be placed upon frozen material.

152-2.7 FINISHING AND PROTECTION OF SUBGRADE. After the subgrade has been substantially completed the full width shall be conditioned by removing any soft or other unstable material which will not compact properly. The resulting areas and all other low areas, holes or depressions shall be brought to grade with suitable select material. Scarifying, blading, rolling and other methods shall be performed to provide a thoroughly compacted subgrade shaped to the lines and grades shown on the plans.

Grading of the subgrade shall be performed so that it will drain readily. The Contractor shall take all precautions necessary to protect the subgrade from damage. He/she shall limit hauling over the finished subgrade to that which is essential for construction purposes.

All ruts or rough places that develop in a completed subgrade shall be smoothed and recompacted.

No subbase, or surface course shall be placed on the subgrade until the subgrade has been approved by the Engineer.

152-2.8 HAUL. All hauling will be considered a necessary and incidental part of the work. Its cost shall be considered by the Contractor and included in the contract unit price for the pay of items of work involved. No payment will be made separately or directly for hauling on any part of the work.

152-2.9 TOLERANCES. In those areas upon which a subbase or base course is to be placed, the top of the subgrade shall be of such smoothness that, when tested with a 16-foot straightedge applied parallel and at right angles to the centerline, it shall not show any deviation in excess of 1/2-inch, or shall not be more than 0.05-foot from true grade as established by grade hubs or pins. Any deviation in excess of these amounts shall be corrected by loosening, adding, or removing materials; reshaping; and re-compacting by sprinkling and rolling.

On runway safety areas, intermediate and other designated areas, the surface shall be of such

smoothness that it will not vary more than 0.10 foot from true grade as established by grade hubs. Any deviation in excess of this amount shall be corrected by loosening, adding or removing materials, and reshaping.

152-2.10 TOPSOIL. When topsoil is specified or required as shown on the plans or under Item T-905, it shall be salvaged from stripping or other grading operations. The topsoil shall meet the requirements of Item T-905. If, at the time of excavation or stripping, the topsoil cannot be placed in its proper and final section of finished construction, the material shall be stockpiled at approved locations. Stockpiles shall not be placed within 150 feet of runway pavement or 50 feet of taxiway pavement and shall not be placed on areas which subsequently will require any excavation or embankment. If, in the judgment of the Engineer, it is practical to place the salvaged topsoil at the time of excavation or stripping, the material shall be placed in its final position without stockpiling or further rehandling.

Upon completion of grading operations, stockpiled topsoil shall be handled and placed as directed, or as required in Item T-905.

No direct payment will be made for topsoil as such under Item P-152. The quantity removed and placed directly or stockpiled shall be paid for at the contract unit price per cubic yard for ``Unclassified Excavation."

When stockpiling of topsoil and later rehandling of such material is directed by the Engineer, the material so re-handled shall be paid for at the contract unit price per cubic yard for “Topsoiling,” as provided in Item T-905.

METHOD OF MEASUREMENT

152-3.1 The quantity of excavation and foreign borrow to be paid for shall be the number of cubic yards measured in its original position.

Measurement shall not include the quantity of materials excavated without authorization beyond normal slope lines, or the quantity of material used for purposes other than those directed.

152-3.2 For payment specified by the cubic yard, measurement for all excavation shall be computed by the average end area method. The end area is that bound by the original ground line established by field cross sections and the final theoretical pay line established by cross sections shown on the plans, subject to verification by the Engineer. After completion of all excavation operations and prior to the placing of base or subbase material, the final excavation shall be verified by the Engineer by means of field cross sections taken randomly at intervals not exceeding 50 linear feet.

Final field cross sections shall be employed if the following changes have been made:

a. Plan width of embankments or excavations are changed by more than plus or minus 1.0 foot; or

b. Plan elevations of embankments or excavations are changed by more than plus or

minus 0.5 foot.

BASIS OF PAYMENT

152-4.1 "Muck Excavation" payment shall be made at the contract unit price per cubic yard. This price shall be full compensation for furnishing all materials, labor, equipment, tools, and incidentals necessary to complete the item.

152-4.2 "Unclassified Excavation" payment shall be made at the contract unit price per cubic yard. This price shall be full compensation for furnishing all materials, labor, equipment, tools, and incidentals necessary to complete the item.

152-4.3 "Foreign Borrow" payment shall be made at the contract unit price per cubic yard. This price shall be full compensation for furnishing all materials, labor, equipment, tools, and incidentals necessary to complete the item.

Payment will be made under:

Item P-152.1	Muck Excavation -- per cubic yard
Item P-152.2	Unclassified Excavation -- per cubic yard
Item P-152.3	Foreign Borrow – per cubic yard

TESTING REQUIREMENTS

ASTM D 698	Tests for Moisture-Density Relations of Soils and Soil-Aggregate Mixtures, Using 5.5-pound Rammer and 12-inch Drop
ASTM D 1556	Test for Density of Soil In-Place by the Sand Cone Method
ASTM D 1557	Tests for Moisture-Density Relations of Soils and Soil-Aggregate Mixtures, Using 10-pound Rammer and 18-inch Drop
ASTM D 2167	Test for Density of Soil In-Place by the Rubber Balloon Method.

END OF ITEM P-152

SECTION P-156
TEMPORARY AIR AND WATER POLLUTION, SOIL EROSION, AND SILTATION CONTROL

DESCRIPTION

156-1.1 This item shall consist of temporary control measures as shown on the plans or as ordered by the Engineer during the life of a contract to control water pollution, soil erosion, and siltation through the use of berms, dikes, dams, sediment basins, fiber mats, gravel, mulches, grasses, slope drains, and other erosion control devices or methods.

The temporary erosion control measures contained herein shall be coordinated with the permanent erosion control measures specified as part of this contract to the extent practical to assure economical, effective, and continuous erosion control throughout the construction period.

Temporary control may include work outside the construction limits such as borrow pit operations, equipment and material storage sites, waste areas, and temporary plant sites.

MATERIALS

156-2.1 GRASS. Grass which will not compete with the grasses sown later for permanent cover shall be a quick-growing species (such as ryegrass, Italian ryegrass, or cereal grasses) suitable to the area providing a temporary cover.

156-2.2 MULCHES. Mulches may be hay, straw, fiber mats, netting, bark, wood chips, or other suitable material reasonably clean and free of noxious weeds and deleterious materials.

156-2.3 FERTILIZER. Fertilizer shall be a standard commercial grade and shall conform to all Federal and state regulations and to the standards of the Association of Official Agricultural Chemists.

156-2.4 EROSION CONTROL WATTLES. The wattles are to be composed of hay, straw or other suitable material, reasonably clean and free of noxious weeds and deleterious materials. Wattles shall be across the ground and anchored with wooden stakes. Wattles shall be used in lieu of sedimentation (silt) fence and as check dams as shown on the Plans or otherwise directed by the Engineer.

156-2.5 CATCH BASIN FILTER BAG. A filter bag (Dandy Sack® or approved equivalent) shall be inserted into the catch basin just below the grating as shown on the Plans or directed by the Engineer.

156-2.6 SLOPE DRAINS. Slope drains may be constructed of pipe, fiber mats, rubble, Portland cement concrete, bituminous concrete or other materials that will adequately control erosion.

156-2.7 OTHER. All other materials shall meet commercial grade standards and shall be approved by the Engineer before being incorporated into the project.

CONSTRUCTION REQUIREMENTS

156-3.1 GENERAL. In the event of conflict between these requirements and pollution control laws, rules, or regulations of other Federal, state, or local agencies, the more restrictive laws, rules, or regulations shall apply.

The Engineer shall be responsible for assuring compliance to the extent that construction practices, construction operations, and construction work are involved.

156-3.2 SCHEDULE. Prior to the start of construction, the Contractor shall submit schedules for accomplishment of temporary and permanent erosion control work, as are applicable for clearing and grubbing; grading; construction; paving; and structures at watercourses. The Contractor shall also submit a proposed method of erosion and dust control on haul roads and borrow pits and a plan for disposal of waste materials. Work shall not be started until the erosion control schedules and methods of operation for the applicable construction have been accepted by the Engineer.

156-3.3 AUTHORITY OF ENGINEER. The Engineer has the authority to limit the surface area of erodible earth material exposed by clearing and grubbing, to limit the surface area of erodible earth material exposed by excavation, borrow and fill operations, and to direct the Contractor to provide immediate permanent or temporary pollution control measures to minimize contamination of adjacent streams or other watercourses, lakes, ponds, or other areas of water impoundment.

156-3.4 CONSTRUCTION DETAILS. The Contractor will be required to incorporate all permanent erosion control features into the project at the earliest practicable time as outlined in the accepted schedule. Except where future construction operations will damage slopes, the Contractor shall perform the permanent seeding and mulching and other specified slope protection work in stages, as soon as substantial areas of exposed slopes can be made available. Temporary erosion and pollution control measures will be used to correct conditions that develop during construction that were not foreseen during the design stage; that are needed prior to installation of permanent control features; or that are needed temporarily to control erosion that develops during normal construction practices, but are not associated with permanent control features on the project.

Where erosion is likely to be a problem, clearing and grubbing operations should be scheduled and performed so that grading operations and permanent erosion control features can follow immediately thereafter if the project conditions permit; otherwise, temporary erosion control measures may be required between successive construction stages.

The Engineer will limit the area of clearing and grubbing, excavation, borrow, and embankment operations in progress, commensurate with the Contractor's capability and progress in keeping the finish grading, mulching, seeding, and other such permanent control measures current in accordance with the accepted schedule. Should seasonal limitations make such coordination unrealistic, temporary erosion control measures shall be taken immediately to the extent feasible and justified.

In the event that temporary erosion and pollution control measures are required due to the

Contractor's negligence, carelessness, or failure to install permanent controls as a part of the work as scheduled or are ordered by the Engineer, such work shall be performed by the Contractor at his/her own expense.

The Engineer may increase or decrease the area of erodible earth material to be exposed at one time as determined by analysis of project conditions.

The erosion control features installed by the Contractor shall be acceptably maintained by the Contractor during the construction period.

Whenever construction equipment must cross watercourses at frequent intervals, and such crossings will adversely affect the sediment levels, temporary structures should be provided.

Pollutants such as fuels, lubricants, bitumen, raw sewage, wash water from concrete mixing operations, and other harmful materials shall not be discharged into or near rivers, streams, and impoundments or into natural or manmade channels leading thereto.

METHOD OF MEASUREMENT

156-4.1 Temporary erosion and pollution control work required which is not attributed to the Contractor's negligence, carelessness, or failure to install permanent controls will be performed as scheduled or ordered by the Engineer. Completed and accepted work will be measured as follows:

- **a.** Erosion control wattles will be measured per linear foot.
- **b.** Inlet protection/catch basin filter bags will be measured per each.
- **c.** Erosion Matting will be measured per square yard
- **d.** Stabilized construction entrance will be measured per each.
- ~~**e.** Timber mat will be measured per each.~~
- ~~**f.** Rock filter berm will be measured per linear foot~~
- **g.** Silt Fence will be measured per linear foot
- **h.** Erosion Control Filter Bag per each
- **i.** Temporary Dewatering per lump sum
- **j.** All other temporary erosion and sedimentation control as shown on the plans or directed by the Engineer based on site conditions encountered during construction.

156-4.2 Control work performed for protection of construction areas outside the construction limits, such as borrow and waste areas, haul roads, equipment and material storage sites, and temporary plant sites, will not be measured and paid for directly but shall be considered as a subsidiary obligation of the Contractor with costs included in the contract prices bid for the items to which they apply.

BASIS OF PAYMENT

156-5.1 Temporary water pollution, soil erosion, and siltation control work ordered by the Engineer and as provided in paragraph 156-4.1 will be paid for under:

Item P-156.1	Erosion Control Wattles, 8-Inch -- per linear foot

Item P-156.2	Erosion Control Wattles, 24-Inch – per linear foot
Item P-156.3	Inlet Protection/Catch Basin Filter Bags -- per each
Item P-156.4	Erosion Matting -- per square yard
Item P-156.5	Stabilized Construction Entrance -- per each
~~Item P-156.6~~	~~Timber Mat -- per each~~
~~Item P-156.7~~	~~Rock Filter Berm -- per linear foot~~
Item P-156.8	Silt Wattle – per linear foot
Item P-156.9	Sediment Control Filter Bags – per each
Item P-156.10	Temporary Dewatering – per lump sum

Where other directed work falls within the specifications for a work item that has a contract price, the units of work shall be measured and paid for at the contract unit price bid for the various items.

Temporary control features not covered by contract items that are ordered by the Engineer will be paid for in accordance with Section 90-05.

END OF SECTION P-156

ITEM D-701
PIPE FOR STORM DRAINS AND CULVERTS

DESCRIPTION

701-1.1 This item shall consist of the construction of pipe culverts, pipe end sections, and storm drain pipes of the types, classes, sizes and dimensions required on the plans, furnished and installed at the places designated on the plans and profiles, or by the Engineer in accordance with these specifications and in reasonably close conformity with the lines and grades shown on the plans.

The item shall include within the unit price per linear foot of pipe, the cost of excavation and backfill, the cost of furnishing and installing all pipe, trench bracing, outlet protection, all fittings required to complete the pipe drain as shown on the plans, and the material for and the making of all joints, including all connections to existing drainage pipes and structures.

MATERIALS

701-2.1 GENERAL. Materials shall meet the requirements shown on the plans and specified below.

701-2.2 PIPE. The pipe shall be of the type called for on the plans, or in the proposal, and shall be in accordance with the following appropriate requirements.

Metallic Coated Corrugated Steel Pipe (Type I, IR or II)	ASTM A 760
Galvanized Steel Corrugated Structural Plates and Fasteners for Pipe, Pipe-Arches, and Arches	ASTM A 761
Polymer Pre-coated Corrugated Steel Pipe for Sewers and Drains	ASTM A 762
Post-Coated and Lined (Bituminous or Concrete) Corrugated Steel Sewer and Drainage Pipe	ASTM A 849
Steel Sheet, Zinc and Aramid Fiber Composite Coated for Corrugated Steel Sewer, Culvert, and Underdrain Pipe	A885/A885M-96
Corrugated Aluminum Alloy Culvert Pipe	ASTM B 745
Non-Reinforced Concrete Pipe	ASTM C 14
Reinforced Concrete Pipe (Class V)	ASTM C 76
Reinforced Concrete D-Load Pipe	ASTM C 655
Reinforced Concrete Arch Pipe	ASTM C 506
Reinforced Concrete Elliptical Pipe	ASTM C 507

Precast Reinforced Concrete Box Sections	ASTM C 789 and C 850
Poly (Vinyl Chloride) Ribbed Drain Pipe & Fittings Based on Controlled Inside Diameter	ASTM F 794
Poly (Vinyl Chloride) (PVC) Corrugated Sewer Pipe With a Smooth Interior and Fittings	ASTM F 949
Bituminous-Coated Corrugated Metal Pipe and Pipe Arches	AASHTO M 190
Bituminous-Coated Corrugated Aluminum Alloy Culvert Pipe	AASHTO M 190 & M 196
Bituminous-Coated Structural Plate Pipe, Pipe Arch, and Arches	AASHTO M 167 & M 243
Aluminum Alloy Structural Plate for Pipe, Pipe Arch, and Arches	AASHTO M 219
Polyvinyl Chloride (PVC) Pipe	ASTM D 3034
Corrugated Polyethylene Drainage Tubing (all types)	AASHTO M 252
Corrugated Polyethylene Pipe 300 to 1200 mm Diameter (all types)	AASHTO M 294M
Ductile Iron Gravity Sewer Pipe	ASTM A746
Thickness Design of Ductile Iron Pipe	AWWA/ANSI C150/A21.50
Cement Mortar Lining for Ductile Iron Pipe	AWWA/ANSI C104/A 21.4
Poly (Vinyl Chloride) (PVC) Profile Wall Drain Pipe and Fittings Based on Controlled Inside Diameter	AASHTO M 304

701-2.3 CONCRETE. Concrete for pipe cradles shall meet the requirements of Item P-610.

701-2.4 RUBBER GASKETS. Rubber gaskets for rigid pipe shall conform to the requirements of ASTM C 443. Rubber gaskets for PVC pipe shall conform to the requirements of ASTM F 477. Rubber gaskets for zinc-coated steel pipe and precoated galvanized pipe shall conform to the requirements of ASTM D 1056, for the "RE" closed cell grades.

701-2.5 JOINT MORTAR. Pipe joint mortar shall consist of one part Portland cement and two parts sand. The portland cement shall conform to the requirements of ASTM C 150, Type I. The sand shall conform to the requirements of ASTM C 144.

701-2.6 JOINT FILLERS. Poured filler for joints shall conform to the requirements of ASTM D 1190.

701-2.7 PLASTIC GASKETS. Plastic gaskets shall conform to the requirements of AASHTO M 198 (Type B).

701-2.8 CONTROLLED LOW STRENGTH MATERIAL(CLSM). Controlled low strength material shall conform to the requirements of Item P-150. When CLSM is used all joints shall have gaskets.

701-2.9 STONE OULET PROTECTION. Stone outlet protection shall be of the size noted and placed to the dimensions shown on the plans. All stone shall meet the latest issue of RIDOT Specifications and be from a RIDOT approved source for said material

701-3.0 CULVERT END SAFETY GRATE. Culvert end section grate materials shall meet RIDOT specifications.

701-3.1 CONCRETE END-SECTION. Concrete end sections shall conform to the latest issue of the RIDOT specifications.

701-3.2 GALVENIZED METAL END-SECTION. Galvanized steel end sections shall be manufactured from material meeting the requirements of AASHTO M218. The units shall conform to the shape, dimensions, and thickness shown on the applicable standard sheet and/or contract plans. The nominal metal thickness corresponding to any gauge shall be as shown in RIDOT specifications.

701-3.1 SUBMITTALS AND CERTIFICATIONS

- Catalog data for each type of pipe meeting the requirements specified.
- Catalog data for each type of pipe end section meeting the requirements specified.
- Catalog data for each type of culvert end safety grate meeting the requirements specified.
- P-610 approved Concrete Mix Design

CONSTRUCTION METHODS

701-4.1 EQUIPMENT. All equipment necessary and required for the proper construction of storm sewers and culverts shall be on the project, in first-class working condition, and approved by the Engineer before construction is permitted to occur.

The contractor shall provide appropriate hoisting equipment to handle the pipe while unloading and placing it in its final position without damage to the pipe.

The contractor shall provide hand tampers and pneumatic tampers to obtain the required compaction of the pipe bedding and the backfill, as specified.

701-4.2 EXCAVATION. The width of the pipe trench shall be sufficient to permit satisfactory jointing of the pipe and thorough tamping of the bedding material under and around the pipe, but it shall not be less than the external diameter of the pipe plus 12 inches on each side. The trench walls shall be approximately vertical.

Where rock, hardpan, or other unyielding material is encountered, the Contractor shall remove it from below the foundation grade for a depth of at least 12 inches or one-half inch for each foot of fill over the top of the pipe (whichever is greater) but for no more than three-quarters of the

nominal diameter of the pipe. The width of the excavation shall be at least 2 foot (60 cm) greater than the horizontal outside diameter of the pipe. The excavation below grade shall be backfilled with selected fine compressible material, such as silty clay or loam, and lightly compacted in layers not over 6 inches (150 mm) in uncompacted depth to form a uniform but yielding foundation

Where a firm foundation is not encountered at the grade established, due to soft, spongy, or other unstable soil, the unstable soil shall be removed and replaced with approved granular material for the full trench width. The Engineer shall determine the depth of removal necessary. The granular material shall be compacted to provide adequate support for the pipe.

The excavation for pipes that are placed in embankment fill shall not be made until the embankment has been completed to a height above the top of the pipe as shown on the plans.

701-4.3 BEDDING. The pipe bedding shall conform to the class specified on the plans. Bedding shall consist of a bed of select granular material having a thickness of at least 12 inches (300 mm) below the bottom of the pipe and extending up around the pipe for a depth of not less than 6 inches (150 mm) above the top of the outside diameter. The layer of bedding material shall be shaped to fit the pipe for at least 10 percent of the pipe's vertical diameter and shall have recesses shaped to receive the bell of bell and spigot pipe. Bedding shall meet the requirements of Item P-154.

701-4.4 LAYING PIPE. The pipe laying shall begin at the lowest point of the trench and proceed upgrade. The lower segment of the pipe shall be in contact with the bedding throughout its full length. Bell or groove ends of rigid pipes and outside circumferential laps of flexible pipes shall be placed facing upgrade.

Paved or partially lined pipe shall be placed so that the longitudinal center line of the paved segment coincides with the flow line.

Elliptical and elliptically reinforced pipes shall be placed with the manufacturer's top of pipe mark within five degrees of a vertical plane through the longitudinal axis of the pipe.

701-4.5 JOINING PIPE. Joints shall be made with (1) Portland cement mortar, (2) Portland cement grout, (3) rubber gaskets, (4) plastic gaskets, or (5) coupling bands.

Mortar joints shall be made with an excess of mortar to form a continuous bead around the outside of the pipe and shall be finished smooth on the inside. Molds or runners shall be used for grouted joints in order to retain the poured grout. Rubber ring gaskets shall be installed to form a flexible watertight seal.

a. Concrete Pipe. Concrete pipe may be either bell and spigot or tongue and groove. The method of joining pipe sections shall be such that the ends are fully entered and the inner surfaces are reasonably flush and even. Joints shall be thoroughly wetted before mortar or grout is applied.

b. Metal Pipe. Metal pipe shall be firmly joined by form fitting bands conforming to the requirements of ASTM A 760 for steel pipe and AASHTO M 196 for aluminum pipe.

c. PVC and Polyethylene Pipe. Joints for PVC and Polyethylene pipe shall conform to the requirements of ASTM D 3212 when water tight joints are required. Joint for PVC and

Polyethylene pipe shall conform to the requirements of AASHTO M304 when soil tight joints are required. Fittings for polyethylene pipe shall conform to the requirements of AASHTO M252 or M294 M.

701-4.6 BACKFILLING. Pipes shall be inspected before any backfill is placed; any pipes found to be out of alignment, unduly settled, or damaged shall be removed and relaid or replaced at the Contractor's expense

Material for backfill shall be fine, readily compatible soil, or granular material selected from the excavation or a source of the Contractor's choosing. It shall not contain frozen lumps, stones that would be retained on a 2-inch sieve, chunks of highly plastic clay, or other objectionable material. No less than 95 percent of a granular backfill material shall pass through a ½ inch sieve, and no less than 95 percent of it shall be retained on a No. 4 sieve.

When the top of the pipe is even with or below the top of the trench, the backfill shall be compacted in layers not exceeding 6 inches on both sides of the pipe and shall be brought up one foot above the top of the pipe or to natural ground level, whichever is greater. Care shall be exercised to thoroughly compact the backfill material under the haunches of the pipe. Material shall be brought up evenly on both sides of the pipe.

When the top of the pipe is above the top of the trench, the backfill shall be compacted in layers not exceeding 6 inches and shall be brought up evenly on both sides of the pipe to 1 foot above the top of the pipe. The width of backfill on each side of the pipe for the portion above the top of the trench shall be equal to twice the pipe's diameter or 12 feet, whichever is less.

All backfill shall be compacted to the density required under Item P-152.

701-4.7 FILL EXISTING. Existing pipes shall be filled completely with Controlled Low Strength Material (Item P-150). Contractor shall plug downslope end of the existing pipe and fill from the upper end.

Contractor shall demonstrate, in a manner acceptable to the Engineer that the pipe has been completely filled and no voids are present.

701-4.8 Culvert-end safety grates shall be fabricated in accordance with the Standard Sheets. The grate shall lay flat on the embankment slope, overlap the opening equally on each side, and at the top as indicated in the contract documents. The Contractor shall perform any necessary excavation, backfill, and final slope shaping and grading to ensure proper grate support and smooth uniform slopes in the area surrounding the grate. All disturbed areas will be reestablished to the satisfaction of the Engineer.

METHOD OF MEASUREMENT

701-5.1 The length of pipe shall be measured in linear feet of pipe in place, not including end sections, completed, and approved. It shall be measured along the centerline of the pipe from end or inside face of structure to the end or inside face of structure (not including end section), whichever is applicable. The several classes, types and size shall be measured separately. All fittings shall be included in the footage as typical pipe sections in the pipe being measured.

701-5.2 The length of pipe fill shall be measured in linear feet of pipe filled with CLSM. It shall be measured along the centerline of the pipe from end or inside face of structure to the end or inside face of structure.

701-5.3 Pipe end sections shall be measured per unit measured in place. All fittings and materials shall be included in the unit as complete.

701-5.4 Culvert-end safety grates will be measured in square feet to the nearest 0.1 square foot of safety-grate installed, using payment areas shown on the Standard Sheet. For sizes that are not shown on the Standard Sheet, the area will be computed as the product of the overall length and width.

701-5.5 The length of pipe removed shall be measured in linear feet of pipe removed and backfilled, disposed of off-site, completed, and approved. It shall be measured along the centerline of the pipe from end or inside face of structure to the end or inside face of structure

BASIS OF PAYMENT

701-6.1 Payment will be made at the contract unit price per linear foot for each kind of pipe of the type and size designated; the price shall be full compensation for furnishing all materials and for all preparation, excavation, backfill and installation of these materials; and for all labor, equipment, tools, and incidentals necessary to complete the item.

701-6.2 Payment will be made at the contract unit price per each for each kind of pipe end section of the type designated; the price shall be full compensation for furnishing all materials and for all preparation, excavation, and installation of these materials; and for all labor, equipment, tools, and incidentals necessary to complete the item.

701-6.4 Payment will be made at the contract unit price per square foot for culvert-end safety grates; the price shall be full compensation for furnishing all materials and for all preparation, excavation, backfill, and installation of these materials; and for all labor, equipment, tools, and incidentals necessary to complete the item.

701-6.5 Payment will be made at the contract unit price per linear foot for pipe removal as designated; the price shall be full compensation for furnishing all materials and for all preparation, excavation, suitable backfill material, backfilling, disposal of these materials; and for all labor, equipment, tools, and incidentals necessary to complete the item.

Payment will be made under:

Item D-701.1	Reinforced Concrete Pipe, 12-inch -- per linear foot
Item D-701.2	Reinforced Concrete Pipe, 18-inch -- per linear foot
Item D-701.3	Reinforced Concrete Pipe, 24-inch -- per linear foot
Item D-701.4	Reinforced Concrete Pipe, 24-inch, Perforated -- per linear foot
Item D-701.5	Reinforced Concrete Pipe, 30-inch -- per linear foot
Item D-701.6	Reinforced Concrete Pipe, 30-inch, Perforated -- per linear foot
Item D-701.7	Reinforced Concrete Pipe, 36-inch -- per linear foot
Item D-701.8	Ductile Iron Pipe, 36-inch – per linear foot
Item D-701.9	Pipe Removal -- per linear foot
Item D-701.10	Reinforced Concrete Pipe, 15-inch – per linear foot

MATERIAL REQUIREMENTS

ASTM A 760	Corrugated Steel Pipe, Metallic-Coated for Sewers and Drains
ASTM A 761	Corrugated Steel Structural Plate, Zinc Coated, for Field-BoltedPipe, Pipe-Arches, and Arches
ASTM A 762	Corrugated Steel-Pipe, Polymer Precoated for Sewers and Drains
ASTM A 849	Post-Applied Coatings, Pavings, and Linings for Corrugated Steel Sewer and Drainage Pipe
ASTM A 885/ A 885M-96	Steel Sheet, Zinc and Aramid Fiber Composite Coated for Corrugated Steel Sewer, Culvert, and Underdrain Pipe
ASTM B 745	Corrugated Aluminum Alloy Culvert Pipe
ASTM C 14	Concrete Sewer, Storm Drain, and Culvert Pipe
ASTM C 76	Reinforced Concrete Culvert, Storm Drain, and Sewer Pipe
ASTM C 94	Ready Mixed Concrete
ASTM C 144	Aggregate for Masonry Mortar
ASTM C 150	Portland Cement

ASTM C 443	Joints for Circular Concrete Sewer and Culvert Pipe, Using Rubber Gaskets
ASTM C 506	Reinforced Concrete Arch Culvert, Storm Drain, and Sewer Pipe
ASTM C 507	Reinforced Concrete Elliptical Culvert, Storm Drain and Sewer Pipe
ASTM C 655	Reinforced Concrete D-Load Culvert, Storm Drain and Sewer Pipe
ASTM C 1433	Precast Reinforced Concrete Box Sections for Culverts, Storm Drains, and Sewers
ASTM D 1056	Flexible Cellular Materials--Sponge or Expanded Rubber
ASTM D 3034	Type PSM Poly (Vinyl Chloride) (PVC) Sewer Pipe and Fittings
ASTM D 3212	Joints for Drain and Sewer Plastic Pipes Using Flexible Elastomeric Seals
ASTM D 6690	Joint and Crack Sealants, Hot-Applied, for Concrete and Asphalt Pavements
ASTM F 477	Elastomeric Seals (Gaskets) for Joining Plastic Pipe
ASTM F 794	Poly (Vinyl Chloride) Ribbed Drain Pipe & Fittings Based on Controlled Inside Diameter
ASTM F 949	Poly (Vinyl Chloride) (PVC) Corrugated Sewer Pipe with a Smooth Interior and Fittings
AASHTO M 190	Bituminous-Coated Corrugated Metal Culvert Pipe and Pipe Arches
AASHTO M 196	Corrugated Aluminum Alloy Culverts and Underdrains
AASHTO M 198	Joints for Circular Concrete Sewer and Culvert Pipe Using Flexible Watertight Gaskets
AASHTO M 219	Aluminum Alloy Structural Plate for Pipe, Pipe-Arches, and Arches
AASHTO M 243	Field Applied Coating of Corrugated Metal Structural Plate for Pipe, Pipe-Arches, and Arches
AASHTO M 252	Corrugated Polyethylene Drainage Tubing
AASHTO M 294M	Corrugated Polyethylene Pipe, 300 to 1200 mm Diameter
AASHTO M 304	Poly (Vinyl Chloride) (PVC) Profile Wall Drain Pipe and Fittings Based on Controlled Inside Diameter

END OF ITEM D-701

ITEM M-004
SAND FILTERS

DESCRIPTION

004-1.1. This item shall consist of the construction of sand filters in accordance with these specifications, at the specified locations and conforming to the lines, grades, depth and dimensions shown on the plans or required by the Engineer based on field conditions.

MATERIALS

004 -2.1. FILTER FABRIC shall be non-woven filter fabric Class "C" geotextile or better and meet ASTM D-751 (puncture strength - 125 lb.), ASTM D-1117 (Mullen Burst Strength - 400 psi), ASTM D-1682 (tensile strength - 300 lb.).

004 -2.2. IMPERMEABLE LINER shall be ultraviolet resistant, have a minimum thickness of 30 mil, and meet ASTM D 751 (thickness), ASTM D 412 (tensile strength 1,100 lb., elongation 200%), ASTM D 624 (tear resistance - 150 lb./in), and ASTM D 471 (water adsorption: +8 to -2% mass).

004 -2.3. SAND shall be washed and meet AASHTO M-6 or ASTM C-33 concrete sand.

004 -2.4. TOPSOIL COVER shall be relatively free from large stones, roots, stumps, or other materials that will interfere with subsequent sowing of seed, compacting, and establishing turf, and shall be approved by the Engineer before being placed. Topsoil cover shall be characterized as uncompacted USDA sandy loam soil texture, or an amended soil type, with the equivalent or greater infiltration capacity of 1.02 inches/hour.

004 -2.5. UNDERDRAIN GRAVEL shall be washed and meet AASHTO-M-43, 0.25" to 0.75" diameter.

004 -2.6. UNDERDRAIN PIPE shall be 6-inch diameter perforated PVC Schedule 40 pipe (M 278 OR F758, Type PS 28).

CONSTRUCTION METHODS

004 -4.1 GENERAL.

Upon completion of the sand filter construction, heavy equipment and traffic shall be restricted from traveling over the sand filter footprint to minimize compaction of the topsoil layer. Absolutely no runoff is to enter the sand filter until all contributing drainage areas have been stabilized.

004 -4.2 EXCAVATION. Excavate the sand filter to the design dimensions. Excavated materials shall be placed away from the excavation sides to enhance stability of excavation wall. Excavated materials shall be placed downstream of the sand filter, to minimize redeposit of the material during runoff events. Large tree roots and protruding objects must be trimmed flush with the excavation walls in order to prevent puncturing or tearing of the impermeable liner during subsequent installation procedures.

004 -4.3 PLACING IMPERMEABLE LINER. Material shall interface between the excavation side walls and the underdrain and filter layers. The width of the liner must include sufficient material to conform to excavation irregularities and be trimmed to the top of the sand filter layer. Sand piles or other anchoring objects should be placed on the liner at the edge of the excavation to keep the liner open during windy periods. All liner seams, patches, and piping penetrations must receive a durable and watertight seal to prevent runoff from leaking into surrounding soils.

004-4.4 PLACING FILTER FABRIC. Material shall interface between the sand filter layer and underdrain gravel and between the topsoil layer and sand filter layer. The width of the geotextile must include sufficient material to conform to excavation irregularities and for a 6-inch minimum overlap at each sidewall. Sand piles or other anchoring objects should be placed on the fabric at the excavation sidewalls to prevent movement of the geotextile during windy periods. When overlaps are required between rolls, a minimum of 2 feet overlap is required.

004 -4.5 PLACING SAND. Place sand filter layer in a uniform layer. The final thickness of the sand filter layer shall be as indicated on the Contract Drawings.

004 -4.6 PLACING UNDERDRAIN GRAVEL. The stone aggregate should be placed in a maximum loose lift thickness of 12 inches and compacted using a plate compactor. A minimum of 3 inches of gravel shall be placed over underdrain pipes; no minimum required underneath pipes.

Care shall be exercised to prevent natural or fill soils from intermixing with the sand or stone aggregate. All contaminated sand or stone aggregate shall be removed and replaced with uncontaminated sand or stone aggregate.

004 -4.7 OBSERVATION WELLS/CLEANOUTS. Observation wells/cleanouts are to consist of 6-inch diameter perforated PVC pipe with a cap set 3 inches above ground level. Wells shall be spaced as indicated on the Contract Drawings, along the longitudinal center of the sand filter. The pipe shall have a plastic collar with ribs to prevent rotation when removing the cap. The screw top lid shall be a clean out with a locking mechanism or special bolt to discourage vandalism. The depth to the invert shall be marked on the lid. The pipe shall be fitted to the PVC underdrain and oriented vertically within the sand and gravel layers of the sand filter.

004 -4.8 CLEANING AND RESTORATION OF SITE. After the work is completed, the Contractor shall dispose of all surplus material, dirt, and rubbish from the site. Surplus dirt may be deposited in embankments, shoulders, or as ordered by the Engineer. The Contractor shall restore all disturbed areas to their original condition.

Topsoiling, seeding, and mulch shall be paid for under their respective bid items. Refer to Section SECTION T-905 (Topsoiling), T-901 (Seeding), and T-908 (Mulching) specifications. After all work is completed, the Contractor shall remove all tools and equipment, leaving the entire site free, clear, and in good condition.

METHOD OF MEASUREMENT

004 -5.1 The quantity of Sand Filters, completed or installed shall be measured Each for sand filter completed.

BASIS OF PAYMENT

004 -6.1 The accepted quantities of Sand Filters will be paid for at the contract price per EACH complete and in place. This price shall be full compensation for furnishing all materials, including impermeable liner, filter fabric, observation wells, underdrain piping, sand, stone, and topsoil cover, and for all testing, preparation, excavation, backfilling, and placing of the materials; furnishing and installation of such specials and other appurtenances as may be required to complete the item as shown on the plans; and for all labor equipment, tools and incidentals necessary to complete the sand filters.

Payment will be made under:

Item M-004.1	Sand Filter -- per each

END OF ITEM M-004

PAGE INTENTIONALLY LEFT BLANK

ITEM X-106
SHEET PILING

DESCRIPTION

106-1.1 This item shall consist of the installation and maintenance of sheet piling in the area as noted on the plans in accordance with the manufacturer's directions and these specifications. All sheet piling and bracing, where required, is to remain in place. Also included are borings to be taken at 50'-0" intervals along each proposed sheet pile wall prior to beginning any sheet pile work. This specification covers carbon steel sheet piling of structural quality for use in the construction of dock walls, sea walls, cofferdams, excavations and like applications. When the steel is to be welded, it is presupposed that a welding procedure suitable for the grade of steel and intended use or service will be utilized. This specification is applicable to orders in inch-pound units (ASTM 202). For structural products cut from coiled product and furnished without heat-treatment or with stress relieving only, the additional requirements of ASTM A6/A6M, including additional testing requirements and reporting of additional tests, apply.

MATERIAL

106-2.1 Steel sheet piling shall be continuous, integral interlock type having cross section and geometrical properties as set on the Contract Drawings, and conforming to the provisions of Standard Specification for Sheet Piling (ASTM A328). All sheet piling used for construction shall be new material, with all interlocks in good condition and free from excessive rust and pitting. Provide certification or laboratory test results verifying material properties. All shoring material used must meet the following:

a.	Structural Steel	ASTM A709, Grade 50
b.	Steel Sheet Piling	ASTM A572, Grade 50
c.	Structural Tubing	ASTM A500, Grade B

DESIGN

106-3.1 The design is detailed on Contract Drawings S001 to S003 and construction is to be in according to the design.

An alternative, Contractor designed, excavation support and protection systems are permissible and must be designed in accordance with the current AISC LRFD Design Specification, Allowable Stress Design. Design excavation support and protection system for final condition and all construction conditions, including surcharge loads due to construction equipment. Submit four (4) sets of design calculations and four (4) sets of completed detailed drawings, signed and sealed by a Professional Engineer registered in the State of Rhode Island to the Owner's Representative for review. Include in the design calculations all material properties, design loads and design assumptions. Include on the completed detailed drawings all design dimensions, limits of work, elevations, material, member sizes and construction sequence. Include specific installation procedures and testing requirements as part of the submittal. Allow fourteen (14) days for the review by the Owner's Representative.

Ensure that the excavation support and protection system design and construction conform to the following:

a. Open cut excavations are allowed provided they meet OSHA requirements and they stay within the limit of disturbance lines.
b. Examples of alternatives include anchored walls, mechanically stabilized earth walls, prefabricated modular walls, cantilever walls, cofferdams and soil nailing walls. These systems may be comprised of one or more of the following: Soldier Piles, Timber Lagging, Steel Sheet Piling, Deadman Anchors, Wales, Cross Lot Bracing, Raker Braces, Precast Concrete, Precast Lagging, Minipiles, Concrete Reaction Blocks or other methods.
c. Design the alternative excavation support and protection system based on the following parameters:

Soil parameters:

a. Sand (fill)
    1. Effective angle of friction — 30 deg
    2. Moist unit weight of soil — 110 pcf
    3. Saturated unit weight of soil — 115 pcf
    4. Effective cohesion — 0 psf
    5. Static groundwater level at elevation — 21.5 ft
b. Peat Layer
    1. Effective angle of friction — 25 deg
    2. Moist unit weight of soil — 75 pcf
    3. Saturated unit weight of soil — 80 pcf
    4. Effective cohesion — 0 psf
c. Sand (alluvial)
    1. Effective angle of friction — 30 deg
    2. Moist unit weight of soil — 110 pcf
    3. Saturated unit weight of soil — 115 pcf
    4. Effective cohesion — 0 psf

Ensure that all components stay within the limits of disturbance unless an easement is obtained by the Contractor.

CONSTRUCTION METHODS

106-4.1 Install shoring in accordance with the provided design and drawings. Take baseline readings on all shoring and regularly monitor the shoring for vertical and horizontal movement throughout the construction duration of the project. Should the shoring exceed the allowable deflection of 6 inches, stop work and erect the bracing system shown in the contract documents. This bracing work is to be performed at no additional cost to the Owner or the Owner's Representative.

Prior to ordering any materials, the Contractor is to take borings along the perimeter of the proposed excavation; i.e, front face of sheet pile walls. The boring results are to show the depth from existing grade to the bottom of the peat material and are to be submitted to the Owner's Representative for review. Based on the boring results, sheet pile sizes, embedment depths and bracing details may require revisions.

The Contractor's Professional Engineer must certify, sign and seal, that the shoring has been installed in accordance with the provided design drawings prior to beginning work in the shored area. The Contractor is responsible for the adequacy and safety of the shoring.

The work must be supervised by a superintendent or foreman who is experienced in the construction of excavation support and protection system proposed. If the design height of the excavation support and protection system exceeds twenty (20) feet, provide the following with the design submission:

a. For the superintendent or foreman who will supervise the work, submit a list containing at least five (5) projects which demonstrate a minimum of three (3) years experience in the construction of the permanent and/or temporary excavation support and protection system proposed. Include a brief description of each project and the name and phone number of the owner's representative knowledgeable in each project listed.

b. The name of the Professional Engineer, registered in the State of Rhode Island and having at least three (3) years experience in the design and construction of permanent and/or temporary excavation support and protection systems, who will design and specify the sequence of construction of the permanent and/or temporary excavation support and protection of system.

Before starting to drive sheet pile, equipments shall be prepared such as driving hammers and jetting equipment. The driving energy for hammers shall be recommended by the manufacturer so that it's applicable to relevant sheet pile. While jetting equipment shall have a minimum of two removable or fixed jets of the water or be a combination of air and water type.

After preparing all the sheet pile driving equipments, sheet piles can be placed on the location that is shown in the construction drawings. Wales, templates, or guide structures have to be carried on to ensure the sheet pilings are placed and driven to the correct alignment.

After the sheet piling is in place, jetting machine will be used to start driving the sheet piles. Sheet piles have to be driven with the proper size hammer and by approved methods to ensure no damage to the sheet piles and proper interlocking throughout their lengths. A protecting cap shall be employed on the tops of sheet pile to prevent damage during driving with hammer.

After driving the sheet piles into the ground, if the contractor finds that they need additional penetration, splicing or jointing works can be applied. Driving works will be done again for the sheet piles until it reaches its limit on the ground. After this, excessive of sheet pile will be cut off and removed from the site. All cutting-off work must be done in a neat and workmanlike manner for safety purpose.

The contractor shall inspect the interlocked joints of driven sheet piles extending above ground. If the contractor finds that the sheet piles are out of interlock, then the sheet piles have to be removed and replaced with a new sheet pile.

After the inspection of the driven piling, if deemed necessary by the Owner's Representative, the contractor shall pull selected sheet piles to determine the condition of the underground portions of sheet piles. If the contractor finds any damage to the extent that its usefulness in the structure is impaired, then the sheet piles shall be removed and replaced with a new sheet pile at no cost to owner.

Remove all temporary shoring within three (3) feet of the finished grade or roadway surfaces.

METHOD OF MEASUREMENT

106-5.1 The quantity of sheet piling to be paid for will be determined by the number of square feet of material actually constructed and accepted by the Owner's Representative as complying with the plans and specifications excluding any cut-off sections.

BASIS OF PAYMENT

106-6.1 Payment shall be made at the contract unit price per square feet for sheet piling. This price shall be full compensation for furnishing all materials and for all preparation, placing, and installation of materials, and for all labor, equipment, tools, and incidentals necessary to complete the item.

Payment will be made under

Item X-106.1 Sheet Piling – per square feet

END OF ITEM X-106

ITEM X-108
10-INCH SEWER FORCE MAIN PIPING

DESCRIPTION

108-1.1 This item shall consist of the construction of cement-lined 10-INCH diameter ductile iron sewer force main lines and any associated gaskets, fittings, and connections of the types, classes, sizes and dimensions required on the Contract Documents, furnished and installed at the places designated on the plan drawings and profiles, or by the Engineer in accordance with these specifications and in reasonably close conformity with the lines and grades shown on the Contract Documents.

The item shall include within the unit price per linear foot of sewer force main pipe the cost of excavation and backfill, the cost of furnishing and installing all pipe, trench bracing, all fittings, valves, and sleeves required to complete the sewer force main as shown on the plans, and the cost of all joints, including all connections to existing sewer force main lines and structures.

MATERIALS

108-2.1 GENERAL. Materials shall meet the requirements shown on the Contract Documents and specified below.

108-2.2 PIPE. The 10" ductile iron force main pipe shall be of the type called for on the Contract Documents or in the proposal and shall be in accordance with the requirements of ASTM A 746 and AWWA C150/A21.50.

108-2.3 CEMENT LINING. Cement lining for 10" ductile iron pipe shall meet the requirements of AWWA C104/A21.4.

108-2.4 RUBBER GASKETS. Rubber gaskets used for 10" ductile iron sewer force main joints shall be a rubber ring compression-type joint and conform to the requirements of AWWA C111/A21.11.

108-2.5 PIPE FITTINGS. Fittings for 10" ductile iron sewer force main shall be of the type and size called for in the Contract Documents and shall be in accordance with AWWA C111/A21.11 and AWWA C115/A21.15-05, as applicable.

108-2.6 TAPPING SLEEVE AND VALVE. Tapping sleeves and valves shall be of the type and size called for in the Contract Documents and shall be in accordance with AWWA C153/A21.53, MSS SP-60 and SP-113, and ASTM 536, as applicable.

108-2.7 CONTROLLED LOW STRENGTH MATERIAL. Existing pipes to be disconnected and left in place shall be filled with a controlled low strength concrete in accordance with Subsection 603.01.1 of the Rhode Island Department of Transportation Standard Specifications for Road and Bridge Construction (RIDOT Specifications).

108-3.1 SUBMITTALS AND CERTIFICATIONS

- Catalog data for each type of pipe meeting the requirements specified.
- Material certifications for cement pipe lining meeting the requirements specified.
- Catalog data for each type of rubber gasket meeting the requirements specified.
- Catalog data for each type of pipe fitting meeting the requirements specified.

CONSTRUCTION METHODS

108-4.1 EQUIPMENT. All equipment necessary and required for the proper construction of cement-lined 10" ductile iron sewer force mains shall be on the project, in first-class working condition, and approved by the Engineer before construction is permitted to occur.

The contractor shall provide appropriate hoisting equipment to handle the ductile iron pipe while unloading and placing it in its final position without damage to the pipe.

The contractor shall provide hand tampers and pneumatic tampers to obtain the required compaction of the pipe bedding and the backfill, as specified.

108-4.2 EXCAVATION. The width of the sewer force main pipe trench shall be sufficient to permit satisfactory jointing of the pipe and thorough tamping of the bedding material under and around the pipe, but it shall not be less than the external diameter of the pipe plus 12 inches (300mm) on each side. The trench walls shall be approximately vertical.

Where rock, hardpan, or other unyielding material is encountered, the Contractor shall remove it from below the foundation grade for a depth of at least 12 inches or one-half inch for each foot of fill over the top of the pipe (whichever is greater) but for no more than three-quarters of the nominal diameter of the pipe. The width of the excavation shall be at least 2 foot greater than the horizontal outside diameter of the pipe. The excavation below grade shall be backfilled with selected fine compressible material, such as silty clay or loam, and lightly compacted in layers not over 6 inches in uncompacted depth to form a uniform but yielding foundation

Where a firm foundation is not encountered at the grade established, due to soft, spongy, or other unstable soil, the unstable soil shall be removed and replaced with approved granular material for the full trench width. The Engineer shall determine the depth of removal necessary. The granular material shall be compacted to provide adequate support for the pipe.

108-4.3 BEDDING. The pipe bedding shall be either a commercial-grade ¾-inch crushed stone, or shall conform to the requirements for filter stone as specified in subsection M.01.07 of the RIDOT specifications. Bedding shall consist of a bed of select granular material having a thickness of at least 12 inches below the bottom of the pipe and extending up around the pipe for a depth of not less than 6 inches above the top of the outside diameter. The layer of bedding material shall be shaped to fit the pipe for at least 10 percent of the pipe's vertical diameter and shall have recesses shaped to receive the bell of bell and spigot pipe.

108-4.4 LAYING PIPE. Force main pipe shall be in contact with the bedding throughout its full length. Bell or groove ends of rigid pipes and outside circumferential laps of flexible pipes shall be placed facing upgrade.

108-4.5 JOINING PIPE. Joints shall be made with rubber ring compression-type joint gaskets.

Before assembly, all pipe surfaces which are to be in contact with the rubber gaskets and the gaskets themselves shall be thoroughly cleaned. Place and lubricate the gaskets in accordance with the manufacturer's instructions. Align the pipe sections to be joined. Insert the straight end pipe into the bell end, ensuring secure and even contact with the gasket, until a complete connection is made.

Any on-site pipe cuts shall be made before assembly and according to the manufacturer's instructions.

Fittings shall be installed in accordance with the manufacturer's specifications.

108-4.6 CEMENT LINING. Pipes and fittings with cement lining should not be handled with bare hooks or forklift arms; equipment used to handle cement-lined pipe should be protected with rubber to ensure no damage to the pipes or fittings is sustained. Cement-lined pipes and fittings are to be installed in accordance with the directions for unlined pipes and fittings, the manufacturer's directions, and the Contract Documents.

108-4.7 BACKFILLING. Pipes shall be inspected before any backfill is placed; any pipes found to be out of alignment, unduly settled, or damaged shall be removed and relaid or replaced at the Contractor's expense.

Material for backfill shall be fine, readily compatible soil, or granular material selected from the excavation or a source of the Contractor's choosing. It shall not contain frozen lumps, stones that would be retained on a 2-inch sieve, chunks of highly plastic clay, or other objectionable material. No less than 95 percent of a granular backfill material shall pass through a ½ inch sieve, and no less than 95 percent of it shall be retained on a No. 4 sieve.

When the top of the pipe is even with or below the top of the trench, the backfill shall be compacted in layers not exceeding 6 inches on both sides of the pipe and shall be brought up one foot above the top of the pipe or to natural ground level, whichever is greater. Care shall be exercised to thoroughly compact the backfill material under the haunches of the pipe. Material shall be brought up evenly on both sides of the pipe.

When the top of the pipe is above the top of the trench, the backfill shall be compacted in layers not exceeding 6 inches and shall be brought up evenly on both sides of the pipe to 1 foot above the top of the pipe. The width of backfill on each side of the pipe for the portion above the top of the trench shall be equal to twice the pipe's diameter or 12 feet, whichever is less.

108-4.8 CONNECTIONS TO EXISTING. Connections to existing sewer force main lines shall be made using ductile iron tapping sleeves and valves with mechanical joint ends. Contractor shall make connections in accordance with the Contract Documents and the manufacturer's instructions.

Contractor shall contact Warwick Sewer Authority (WSA) at 401-468-4700 at least seven (7) days before planning to connect proposed sewer lines to existing. A WSA representative shall be present when connections are being made. Contractor shall follow all direction given by the WSA representative and the Engineer when connecting existing and proposed sewer lines.

108-4.9 FILL EXISTING. Existing pipes shall be cut, capped, and filled completely with Controlled Low Strength Material (CLSM). Contractor shall plug eastern (downstream) end of the

existing pipe, fill from the eastern (upstream) end, and cap.

Contractor shall demonstrate in a manner acceptable to the Engineer that the pipe has been completely filled and no voids are present.

METHOD OF MEASUREMENT

108-5.1 The length of pipe shall be measured in linear feet, of the pipe indicated in the Contract Documents, in place, completed, and approved. It shall be measured along the centerline of the pipe from end or inside face of structure to the end or inside face of structure, whichever is applicable. All fittings shall be included in the footage as typical pipe sections in the pipe being measured.

108-5.2 The length of pipe fill shall be measured in linear feet of pipe filled with CLSM. It shall be measured along the centerline of the pipe from end or inside face of structure to the end or inside face of structure.

BASIS OF PAYMENT

108-6.1 Payment will be made at the contract unit price per linear foot for 10-INCH ductile iron force main pipe as designated; the price shall be full compensation for furnishing all materials and for all preparation, excavation, backfill and installation of these materials; and for all labor, equipment, tools, and incidentals necessary to complete the item.

108-6.2 Payment will be made at the contract unit price per linear foot for pipe fill as designated; the price shall be full compensation for furnishing all materials and for all preparation, excavation, suitable backfill material, backfilling, disposal of these materials; and for all labor, equipment, tools, and incidentals necessary to complete the item.

Payment will be made under:

Item X-108.1	10-INCH Sewer Force Main with Cement Lining -- per linear foot
Item X-108.2	CLSM Pipe Fill -- per linear foot
Item X-108.3	Sewer Structure Removal -- per each

MATERIAL REQUIREMENTS

ASTM A 536	Ductile Iron Castings
ASTM A 746	Ductile Iron Gravity Sewer Pipe
AWWA C104/A21.4	Cement-Mortar Lining for Ductile-Iron Pipe and Fittings

AWWA C110/A21.10	Ductile-Iron and Gray-Iron Fittings
AWWA C111/A21.11	Rubber-Gasket Joints for Ductile-Iron Pressure Pipe and Fittings
AWWA C150/A21.50	Thickness Design of Ductile-Iron Pipe
AWWA C153/A21.53	Ductile-Iron Compact Fittings
MSS SP-60	Connecting Flange Joints Between Tapping Sleeves and Tapping Valves
MSS SP-113	Connecting Joints Between Tapping Machines and Tapping Valves

END OF ITEM X-108

THIS PAGE INTENTIONALLY LEFT BLANK

ITEM L-100
LIGHTING AND ELECTRICAL WORK

DESCRIPTION

100-1.1 GENERAL . The airfield electrical work to be done under this contract shall include the furnishing of all supervision, labor, materials, tools, equipment, and incidentals necessary to provide new airfield lighting system and other electrical work as shown on the Drawings.

Work shall be in accordance with Federal Aviation Administration Advisory Circular No. 150-5370-10 (latest revision), Standards for Specifying Construction of Airports, as modified herein, other FAA Advisory Circulars and Specifications referred to herein, and other requirements as specified herein. All FAA Advisory Circulars shall be the latest adopted edition if revised.

The electrical work shall comply with latest adopted editions, codes and standards applicable to this Contract as follows:

ANSI C2	National Electrical Safety Code
ASTM,	American Society of Testing and Materials
FAA	Advisory Circulars
FAA	Orders
NEC	National Electrical Code (NFPA No. 70)
NECA	Standard for Installation
NEMA	Standard for Materials and Products
NFPA No. 101	Life Safety Code
UL	Underwriters Laboratories

All work shall be performed in strict accordance with these contract Specifications, Drawings, and any instructions that may be furnished by the Engineer during execution of the work to aid in interpretation of said Drawings and Specifications. Installation details and material and equipment specifications shall be in conformance with all applicable FAA Advisory Circulars. The contractor shall furnish written proof that all airport lighting equipment and materials covered by FAA specifications are certified to meet the Federal Aviation Administration specifications by an independent laboratory as defined in the Advisory Circular 150-5345-53 (latest revision), Airport Lighting Equipment Certification Programs part of the submittal package. The Contractor shall keep these Specifications on file at the Contractor's Airport construction office.

100-1.2 RELATED DOCUMENTS. The general provisions of the contract apply to the work specified in the items L-100, L-108, L-109, L-110, and L-125, as well as any other applicable items in the Contract.

100-1.3 SUMMARY OF WORK. The work to be performed includes furnishing all labor, supplies, materials, equipment, transportation, and services required to augment, move, install, and complete electrical work as specified herein and as shown on the contract Drawings.

All items of general work required, such as excavation, cutting, patching, etc. shall be included in this Contract.

100-1.4 WORK REQUIREMENTS. The general work requirements are as follows:

a. All work shall be scheduled to minimize the impact and duration of shutdowns. The Contractor shall keep the Engineer informed of scheduled work which might affect existing equipment and/or airfield operations. Minimum 3 working days advance notice shall be given to the Engineer and approval received for any electrical disconnections or shutdowns.

b. Existing lighting systems shall be operational at the end of each working day prior to nightfall except as permitted by the engineer. Poor weather visibility or emergency situations may require postponement of a scheduled shutdown on any given day.

c. The Drawings are diagrammatic. Locations of equipment to be installed are shown on the Drawings, but the actual installation will depend on field conditions and the nature of the equipment furnished. When conditions which will adversely affect the installation become apparent to the Contractor, the Engineer shall be promptly notified in writing.

d. Locations and quantities of materials shown on the Drawings and in these Specifications are approximate and shall be used for estimating purposes only. Actual locations and quantities of materials shall be reviewed by the contractor through field investigation. No adjustment to bid item prices will be made for discrepancies between estimated quantities and/or locations of materials as shown in these documents and the actual field conditions.

e. The Contractor shall at all times keep construction areas free from accumulations of waste material and rubbish, and prior to completion of work shall remove any rubbish from and about the project, as well as all tools, reels, equipment, and materials that are not part of the project. Upon completion of the construction, the Contractor shall leave the work and premises in a clean, neat, and safe condition satisfactory to the Engineer. The Contractor shall be responsible for the proper performance in all respects, in whole and in part, of the electrical equipment and for the mechanical installation of electrical equipment until acceptance of the entire work by the Engineer.

100-1.5 SUBMITTALS. In addition to the requirements of Section 2, the Contractor shall include wiring diagrams, cut sheets, brochures, etc. of all equipment used on the job, including, but not limited to the items listed in these Specifications and in the format described herein. The submittal package will not be reviewed unless 100% complete.

100-1.5.1 Submittal Format. The submittal shall consist of manufacturer's brochures and cut sheets describing the equipment and materials the Contractor intends to incorporate in the work. These sheets shall be sequentially ordered by Specification number with the reference Specification number shown on the bottom right of each sheet. Each cut sheet shall show the complete Specification or drawing number with which the item must comply (i.e., L-108.2.3 and/or detail 3 on page E-4). Cut sheets

shall be organized by the Specification item number (L-100, L-108, etc.) with a tabbed divider sheet separating each item section. The submitted cut sheet shall clearly show the equipment manufacturer's name, catalog number, size, type, and/or rating as required by these Specifications or Drawings by underlining or circling the information. Lamp information shall be included with each lighting fixture. The conformance to FAA criteria or other standards, where specified, shall be clearly indicated for each item. Each sheet shall be dedicated to one piece of equipment, and all sheets shall be sequentially numbered (i.e., 1/50; indicating page 1 of 50 total pages). Only one manufacturer's cut sheet information shall be submitted for each item. All sheets shall be 8-1/2" x 11" or 17" x 11". When these sizes are unpractical, a folded 24" x 36" drawing may be substituted. All drawings shall be to scale or shall be dimensioned. All sheets shall be bound in a 3-ring binder. Each submittal shall show on the cover the complete job name and number, date, contractor's name, and the words: "Electrical Submittal." An index shall be included as the first sheet of each submittal and shall show the page number of each item included in the submittal. Subsequent re-submittals for an item shall have different color pages for the items which are being resubmitted. The coloring shall be as follows:

white	initial submittal
yellow	1st resubmittal
orange	2nd resubmittal
red	3rd resubmittal

Samples of conduit, duct, fittings, cables, tapes, fixtures, etc., may be requested by the Engineer or required in these Specifications. After samples have been reviewed, they will be returned, in tested condition, to the Contractor. In the event any items of material or equipment contained in the list fail to comply with Specification requirements, such items will be rejected by the Engineer. All rejected items shall be amended, altered or replaced to meet the criteria and then resubmitted for approval by the Engineer.

Substitutions of materials referenced herein is allowed when "or equal" is referenced. Any substitution shall be included in the submittal package.

100-1.5.2 Submittal Checklist

The following items, as a minimum, shall be submitted as part of the submittal package.

SUBMITTAL CHECKLIST	
ITEM	DESCRIPTION
L-108	5 kV SERIES CIRCUIT CABLE
L-108	600V CIRCUIT WIRE
L-108	COUNTERPOISE WIRE
L-109	AIRFIELD LIGHTING CONTROLS & MONITORING SYSTEM UPGRADES
L-110	ELECTRICAL CONDUIT
L-125	R/W EDGE & END LIGHTS
L-125	T/W EDGE LIGHTS
L-125	ISOLATION TRANSFORMERS
L-125	BASE CANS
L-125	AIRFIELD GUIDANCE SIGNS & PANELS

100-1.6 DRAWINGS. The Drawings, which constitute an integral part of this Contract, shall serve as the working drawings. They indicate the extent and general layout of the lighting and signing system, arrangement of circuits, cables through ducts, connections to existing circuit cables, and other work. Field verification of scaled dimensions is required to determine actual locations, distances, and levels. The Contractor shall research in the field the exact routing and identification of all circuits which extend through, serve, or are affected by the area where work is to commence. No extra compensation will be allowed because of differences between work shown on the Drawings and field conditions. The Contractor shall check the Drawings and Specifications and, if any portion of the work is found to be omitted, unclear, or in error, the Contractor shall immediately notify the Engineer. The directions of the Engineer shall be followed and the work completed accordingly.

a. The design Drawings may be utilized in the preparation of the shop or working drawings showing the permanent construction, as described in L-100.
b. The Drawings and Specifications are complementary and what is called for in either one shall be as binding as if called for in both.
c. Where a disagreement exists between the Drawings and Specifications, the item or arrangements of better quality, greater quantity, or higher cost shall be included in the bid.
d. Any discrepancies between the Drawings, Advisory Circulars, and field conditions must be resolved with the Engineer before proceeding. All agreements shall be verified in writing.
e. “Record" drawings covering equipment installed under previous contracts and which relate to this contract will be available for the Contractor. The airport cannot, however, guarantee the accuracy of these drawings. Those conditions which will affect the work under this contract should be verified prior to any design/fabrication/installation commitment.
f. Detail dimensions shown on the Drawings are approximate and shall be field verified before construction. All differences shall be submitted to the engineer in writing before construction begins.

100-1.7 RECORD DRAWINGS. The Contractor shall mark up a special set of Drawings to show the as-built conditions which differ from the contract Drawings. All changes shall be recorded by a skilled draftsman with at least three years of drafting experience. The Engineer will furnish a set of Drawings to be used for this purpose. Record drawings will be checked monthly for accuracy and partial payments will be withheld until the record drawings are completely updated. This special mark-up set of Drawings shall be kept at the site, and any changes or deviations shall be recorded within one week. The Contractor shall furnish one newly copied as-built Drawing set to the Engineer upon completion. This work shall be completed and accepted by the Engineer before approval of final payment.

100-1.8 MAINTENANCE AND OPERATING INSTRUCTIONS. The Contractor shall provide the Owner with complete instructions in the proper care and operation of the equipment installed under this contract. This is considered as part of the final inspection, and final acceptance will not be given until the Owner's representative is knowledgeable about the system and complete Maintenance and Operation Manuals have been submitted and accepted by the Engineer.

The Contractor shall also collect and assemble the Maintenance and Operation Manual from the installation details, instructions, parts list, source of local supply, schematics of actual equipment and operations, and directions supplied by the manufacturer with all equipment. If cut sheets are included showing various models and features of the equipment supplied, the specific model and features shall be clearly indicated to show only the options of the equipment that are actually provided and installed. Six hardcover copies of the Maintenance and Operation Manual shall be submitted to the Engineer. Final acceptance of the work will be withheld until such data has been accepted as complete and suitably presented to the Engineer for transmission to the Owner.

The Contractor shall install all equipment according to the manufacturers' instructions and as shown in the drawings and Specifications. The Contractor shall notify the Engineer in writing if any discrepancies exist between the aforementioned documents. Installation shall be suspended until discrepancies are resolved and approval to proceed has been granted by the Engineer.

100-1.9 SAFETY RULES. The Electrical Safety Rules shall be observed and complied with in every detail, and any violation thereof shall be cause for immediate termination of the Contractor's authority to proceed with the work and recourse to his Surety for completion of the Project. The Electrical Safety Rules are as follows:

a. The Contractor shall be responsible for conforming with the safety requirements of Appendix 1 to AC 150-5370-2 (latest revision).

b. Electrical circuits, operating over 300 volts, phase-to-ground shall be reenergized before work is accomplished thereon. Work on energized systems shall be accomplished by trained personnel, properly insulated, and done with extreme caution.

c. Electrical circuits shall be considered de-energized <u>only</u> when one of the following conditions exists:

(1) Switches connecting subject circuit to the electrical supply are observed in the OPEN position, with an air break, and safety-tagged (padlocked) in the OPEN position.

(2) Electrically operated switches are visibly OPEN, blocked or racked in the OPEN position, and safety-tagged OPEN.

(3) Whenever the supply circuit break is not visible and clearly identified, the circuit shall be grounded. The ground connection shall be safety-tagged before work thereon, when the ground connection is not within sight of the work area.

(4) Oil switches observed OPEN in a sight window, and tagged OPEN; or oil fuse cutouts with fuse carrier removed and tagged OPEN.

d. Use of Red Safety Tags:

(1) Safety tags shall be filled out and connected to any switch or equipment opened for protection of personnel working upon circuits connected thereto.

(2) Safety tags shall be removed only by the employee who placed the tag, or by another employee designated in writing by the employee who placed the tag, to remove the tag. Removal of a safety tag placed by an employee not available at the time of need to remove, may be authorized by the Electrical Superintendent or his designated representative, only after carefully checking that the circuit is ready to be energized.

(3) Equipment with a safety tag attached shall not be operated, and connections with a safety tag attached shall not be changed.

(4) Insulated cables, operated at over 300 volts to ground shall be handled, when energized, only with rubber gloves tested to 15,000 volts.

(5) Insulated cables, which have been in operation, shall be cut only with a grounded cable shears, or shall be grounded by driving a grounded sharp tool through the shielding and the conductors before cutting.

(6) All personnel working around energized electrical equipment operating at over 600 volts shall wear standard insulated, non-conducting hard hats, and shall wear no garments with metallic zipper fasteners.

(7) Ladders used in any electrical work shall be of wood or fiberglass construction.

(8) The contractor shall designate a supervisor for all contract personnel and operations; said supervisor shall be on the job wherever contract operations are in progress.

100-1.10 CONTRACTOR QUALIFICATIONS. Work shall be performed by a contractor licensed in the State of Rhode Island, with a minimum of five years of electrical contracting experience in airfield electrical systems.

MATERIALS

100-2.1 GENERAL.

a. Airport lighting equipment and materials covered by Federal Aviation Administration (FAA) Specifications shall be certified by independent laboratory testing to be in compliance with the Specification.

b. Equipment and materials covered by other referenced Specifications shall be subject to acceptance through manufacturer's certification of compliance with the applicable specification when requested by the Engineer. Whenever

Underwriters Laboratories has a published standard applicable to the equipment furnished for this contract, the furnished equipment shall be listed by UL.

c. Materials and equipment shall be as specified herein. When materials are used that are not specifically designated herein, they shall be in accordance with the best industry standards and practices for equipment of this type. All components and parts shall be suitable for operation under the environmental conditions specified herein. Metal parts shall be either inherently corrosion-resistant or shall be suitably protected to resist corrosion or oxidation during extended service life.

100-2.2 HARDWARE AND CORROSION PROTECTION. In order to prevent deterioration due to corrosion, all bolts, nuts, studs, washers, pins, terminals, springs, hangers and similar fastenings and fittings shall be of an approved corrosion-resisting material and/or be treated in an approved manner to render it adequately resistant to corrosion. All hardware such as cap screws, set screws, tap bolts, nuts, washers, etc., shall be of stainless steel type 304, SAE grade 2, if they are used outdoors unless specified otherwise on the Drawings. Brass, bronze, or hot-dip galvanized ferrous hardware (per ASTM, Specification A1530) will be considered for indoor use. All bolts, screws, nuts, etc., shall be coated with a layer of anti-seize compound.

All ferrous metalwork shall be galvanized. If any galvanizing is damaged, the metal work shall be refinished by cleaning, treating with one coat of wash primer conforming to Federal (military) Specification MIL-P-152388, and shall be given one shop coat of zinc-rich base paint (zinc dust paint) conforming to Federal Specification TT-P-641F Type II, immediately when the wash primer is dry.

100-2.3 PARTS RATING. All parts shall be of adequate rating for the application and shall not be operated above the parts manufacturer's recommended ratings.

100-2.4 ENVIRONMENTAL CONDITIONS. The equipment installed outdoors shall be designated for continuous outdoor operation under the following environmental conditions unless specified elsewhere:

a. Temperature: Any ambient temperature from minus 20°F to plus 120°F.

b. Altitude: 100 MSL.

c. Humidity: Up to 100 percent.

d. Sand and Dust: Exposure to windblown sand and dust particles.

e. Wind: Operation at wind velocities up to 200 miles per hour.

f. Water: Components provided for underground installation, direct buried or installed in underground housing, shall be suitable for continuous operation, continuously or intermittently submerged in water.

100-2.5 SALVAGE. Except as otherwise specified or indicated on the Drawings, all electrical materials and equipment to be salvaged, removed, or "stored" shall become the property of the Airport, and shall be moved by the Contractor to a site at the airport or within 5 miles of the airport designated by the Engineer. All wastes such as removed asphalt, concrete, excess dirt, conductors, damaged base cans, etc., shall become property of the Contractor and shall be disposed of off site by the Contractor.

100-2.6 TESTING. All materials and finishes are subject to testing. Material inspection and testing, and strength tests on the concrete will be performed by the Airport at no expense to the Contractor other than material used. The Contractor shall assist the Engineer in obtaining samples during the course of construction work. The testing of electrical equipment shall conform to the description of the individual Specification sections.

100-2.7 INSPECTION. Provide for electrical inspections by the authority having jurisdiction. No work shall be concealed or enclosed until after inspections have been scheduled and completed. If work is concealed or enclosed without inspection and approval, the Contractor shall be responsible for all expense and work required to open and restore the concealed area in addition to all required modifications.

Mill inspection will be waived, and the materials accepted upon certified copies of mill reports identifying the material specification requirements. Copies of order bills and test reports shall be furnished as requested.

100-2.8 WARRANTY. The Contractor shall provide a written 1-year warranty guaranteeing all work installed under this contract. It shall cover all parts and labor against defective parts, corrosion or workmanship necessary to repair or bring into proper operation any equipment including, but not limited to, isolation transformers, lamps, edge lights, lighting fixtures, poles, conduit system, and junction boxes. The warranty shall start upon the acceptance of all work as accepted by the Engineer. Final payment will be withheld until receipt of the warranty by the Engineer.

CONSTRUCTION METHODS

100-3.1 GENERAL. Installation shall be performed by experienced and skilled persons to obtain only the best workmanship. All equipment shall be set square and true with construction lines. The work shall be under constant supervision by the Contractor, or by an authorized and competent foreman with at least five years experience, until completion.

100-3.2 INSTALLATION METHOD. The methods used for the installation of electrical system and equipment shall conform to the National Electric Contractors Association (NECA) published "Standard of Installation" except where specifically specified or shown otherwise, and to the requirements of the National Electrical Code (NEC) and its revisions as adopted by the local agency having jurisdiction.

All electrical materials, construction methods, and installation shall be in accordance with applicable Federal Aviation Administration's Advisory Circulars including amendments, the National Electrical Code, and the American National Standards Institute Standard C2.

Workmanship shall be consistent with the best commercial practices for installation of this type. The workmanship shall be first class and in accordance with the highest standards of the electrical industry. The installations and adjustments shall be by competent electricians.

The responsibility for the correct and satisfactory installation and operation of all materials and equipment required herein shall rest with the Contractor. Before any equipment is ordered, a complete schedule of materials and detailed shop drawings covering all items of equipment and brochures of the materials proposed for installation shall be submitted for approval by the Engineer as described in Item L-100.

100-3.3 SITE CONDITIONS. At least five working days prior to commencing construction operations in an area which may involve underground utility facilities, the Contractor shall notify the Engineer and the owners of each underground utility facility shown on the Drawings. The Contractor shall enlist the assistance of the Airport Electrical Maintenance personnel and FAA personnel in locating existing airfield cables.

The existence of any known buried wires, conduits, junction boxes, ducts, or other facilities is shown on the Drawings in a general way only. It will be the duty of the Contractor, with the help of airport personnel, to visit the site and make exact determination of the existence and location of any facilities prior to commencing any work. It is understood that the Contractor will be responsible for making the exact determination of the location and condition of such facilities. Any costs of determination shall be paid for by the Contractor and considered incidental to the bid prices. The Contractor shall request copies of contract drawings from previous construction projects from the Airport, and examine these drawings to assist in identifying and verifying at the site, the location of all below grade utilities in the vicinity of the work performed under this contract.

All items damaged by the Contractor's workers or equipment shall be replaced immediately at the Contractor's expense.

100-3.4 INTERRUPTIONS. Interruptions of airfield series lighting circuits may be necessary during construction. The Contractor shall provide a reliable shunt cable to provide temporary continuity of circuit service to runway and taxiway lights and signs during construction where required. The Contractor shall not interrupt any circuit or perform any work that might endanger any circuit until approval of the Engineer has been received. Temporary cables shall be protected and identified as a hazard.

The Contractor shall be responsible for installing, maintaining, protecting, and removing all required temporary jumper cables.

For the permanent installation, all temporary connections and rerouting of circuits shall be replaced with new materials installed in accordance with the Specifications and as shown on the Drawings.

The Contractor shall remove all circuit cables from their respective electrical power sources in the vault before working on the cables in the field. All such cables shall be so marked at the point of disconnection to prevent accidental reconnection. This work is incidental to the electrical work and no separate payment will be made. See L-100-1.9, SAFETY RULES.

100-3.5 CODES. The Contractor shall comply with all ordinances, laws, regulations, and codes applicable to the work involved and as referenced in these Specifications. This does not relieve the Contractor from furnishing and installing work shown or specified which may be beyond the requirements of such ordinances, laws, regulations, and codes.

100-3.6 SAFETY AREA. The contractor shall abide by the requirements of the contract Specifications when working within the runway or taxiway safety areas or as directed by the engineer.

METHOD OF MEASUREMENT

100-4.1 No separate measurement shall be made for work required in L-100. Costs associated with the work will be considered included in other Bid Items.

BASIS OF PAYMENT

100-5.1 All costs associated with work required by Item L-100 shall be included in the prices for installation of the respective electrical items.

MATERIAL REQUIREMENTS

AC 150/5370-2	Operational Safety on Airports During Construction
AC 150/5370-10	Standards for Specifying Construction of Airports
MIL-P-152388	Wash Primer Specification
TT-P-641F	Type II, Base Paint, Zinc-Rich

END OF ITEM L-100

ITEM L-108
UNDERGROUND POWER CABLE FOR AIRPORTS

DESCRIPTION

108-1.1 This item shall consist of furnishing and installing power cables within conduit or duct banks-in accordance with these specifications at the locations shown on the plans. Also included are the installation of counterpoise wires, ground wires, ground rods and connections, cable splicing, cable marking & tagging, cable testing, and all incidentals necessary to place the cable in operating condition as a completed unit to the satisfaction of the Engineer. This item shall not include the installation of duct banks or conduit, trenching and backfilling for duct banks or conduit, or furnishing or installation of any cable for FAA facilities. Requirements and payment for trenching and backfilling for the installation of underground conduit and duct banks are covered under Item L-110 "Airport Underground Electrical Duct Banks and Conduits."

EQUIPMENT AND MATERIALS

108-2.1 GENERAL.

a. Airport lighting equipment and materials covered by Federal Aviation Administration (FAA) specifications shall be approved under the Airport Lighting Equipment Certification Program described in Advisory Circular (AC) 150/5345-53, current version.

b. All other equipment and materials covered by other referenced specifications shall be subject to acceptance through manufacturer's certification of compliance with the applicable specification, when requested by the Engineer.

c. Manufacturer's certifications shall not relieve the Contractor of the Contractor's responsibility to provide materials in accordance with these specifications and acceptable to the Engineer. Materials supplied and/or installed that do not materially comply with these specifications shall be removed, when directed by the Engineer and replaced with materials, which do comply with these specifications, at the sole cost of the Contractor.

d. All materials and equipment used to construct this item shall be submitted to the Engineer for approval prior to ordering the equipment. Submittals consisting of marked catalog sheets or shop drawings shall be provided. Submittal data shall be presented in a clear, precise and thorough manner. Original catalog sheets are preferred. Photocopies are acceptable provided they are as good a quality as the original. Clearly and boldly mark each copy to identify pertinent products or models applicable to this project. Indicate all optional equipment and delete non-pertinent data. Submittals for components of electrical equipment and systems shall identify the equipment for which they apply on each submittal sheet. Markings shall be boldly and clearly made with arrows or circles (highlighting is not acceptable). Contractor is solely responsible for delays in project accruing directly or indirectly from late submissions or resubmissions of submittals.

e. The data submitted shall be sufficient, in the opinion of the Engineer, to determine compliance with the plans and specifications. The Engineer reserves the right to reject any and all equipment, materials or procedures, which, in the Engineer's opinion, does not meet the system design and the standards and codes, specified herein.

f. All equipment and materials furnished and installed under this section shall be guaranteed against defects in materials and workmanship for a period of at least twelve (12) months from final acceptance by the Owner. The defective materials and/or equipment shall be repaired or replaced, at the Owner's discretion, with no additional cost to the Owner. The Contractor shall be responsible to maintain an insulation resistance of 50 megohms minimum, (1000V megger) with isolation transformers connected in new circuits and new segments of existing circuits through the end of the contract warranty period.

108-2.2 CABLE. Underground cable for airfield lighting facilities (i.e. runway and taxiway lights) shall conform to the requirements of AC 150/5345-7, Specification for L-824 Underground Electrical Cable for Airport Lighting Circuits. Conductor sizes noted above shall not apply to leads furnished by manufacturers on airfield lighting transformers and fixtures.

Wire for electrical circuits up to 600 volts shall comply with Specification L-824 and/or Federal Specification A-A-55543 and shall be type THWN-2.

Cable type, size, number of conductors, strand and service voltage shall be as specified on the plans.

108-2.3A BARE COPPER WIRE (COUNTERPOISE, BARE COPPER GROUND AND GROUND RODS.) Wire for counterpoise or ground–installations for airfield lighting systems shall be No. 6 AWG solid for counterpoise and/or No. 6 AWG stranded for ground wire conforming to ASTM B 3 and ASTM B 8, and shall be bare copper wire conforming to the requirements of ASTM D 33.

Ground rods shall be copper or copper-clad steel. The ground rods shall be of the length and diameter specified on the plans, but in no case shall they be less than 8-feet (240 cm) long nor less than 5/8 inch (15 mm) in diameter.

108-2.3B BARE COPPER WIRE (COUNTERPOISE AND GROUND RODS FOR FAA FACILITES.) Lightning and surge protection, and grounding and bonding for new FAA facilities, and/or modifications and upgrades to existing FAA facilities shall conform to the requirements of FAA-STD-019e, *Lightning and Surge Protection, Grounding, Bonding and Shielding Requirements for Facilities and Electronic Equipment*.

A #1/0 AWG bare copper stranded counterpoise wire shall be provided for all buried cables and conductors not routed in ferrous conduit.

Ground rods shall be copper or copper-clad steel. The ground rods shall be of the length and diameter specified on the plans, but in no case shall they be less than 10-feet (300 cm) long nor less than 3/4 inch (19 mm) in diameter.

108-2.4 CABLE CONNECTIONS. In-line connections of underground primary cables shall be of the type called for on the plans, and shall be one of the types listed below. No separate payment will be made for cable connections.

a. The Cast Splice. A cast splice, employing a plastic mold and using epoxy resin equivalent to that manufactured by Minnesota Mining and Manufacturing Company,

"Scotchcast" Kit No. 82--B, or as manufactured by Hysol® Corporation, "Hyseal Epoxy Splice" Kit No. E1135, or equivalent, is used for potting the splice is acceptable.

b. The Field-attached Plug-in Splice. Figure 3 of AC 150/5345-26, Specification for L-823 Plug and Receptacle, Cable Connectors, employing connector kits, is acceptable for field attachment to single conductor cable. It shall be the Contractor's responsibility to determine the outside diameter of the cable to be spliced and to furnish appropriately sized connector kits and/or adapters and heat shrink tubing with integral sealant.

c. The Factory-Molded Plug-in Splice. Specification for L-823 Connectors, Factory-Molded to Individual Conductors, is acceptable.

d. The Taped or Heat-Shrinked Splice. Taped splices employing field-applied rubber, or synthetic rubber tape covered with plastic tape is acceptable. The rubber tape should meet the requirements of ASTM D 4388 and the plastic tape should comply with Mil Spec. MIL-I-24391or Fed. Spec. A-A-55809. Heat shrinkable tubing shall be heavy-wall, self-sealing tubing rated for the voltage of the wire being spliced and suitable for direct-buried installations. The tubing shall be factory coated with a thermoplastic adhesive-sealant that will adhere to the insulation of the wire being spliced forming a moisture- and dirt-proof seal. Additionally, heat shrinkable tubing for multi-conductor cables, shielded cables, and armored cables shall be factory kits designed for the application. Heat shrinkable tubing and tubing kits shall be manufactured by Tyco Electronics/ Raychem Corporation, Energy Division, or approved equivalent.

In all the above cases, connections of cable conductors shall be made using crimp connectors utilizing a crimping tool designed to make a complete crimp before the tool can be removed. All L-823/L-824 splices and terminations shall be made in accordance with the manufacturer's recommendations and listings.

All connections of counterpoise, grounding conductors and ground rods shall be made by the exothermic process or approved equivalent, except the base can ground clamp connector shall be used for attachment to the base can. All exothermic connections shall be made in accordance with the manufacturer's recommendations and listings.

108-2.5 SPLICER QUALIFICATIONS. Every airfield lighting cable splicer shall be qualified in making cable splices and terminations on cables rated above 5,000 volts AC. The Contractor shall submit to the Engineer proof of the qualifications of each proposed cable splicer for the cable type and voltage level to be worked on. Cable splicing/terminating personnel shall have a minimum of three (3) years continuous experience in terminating/splicing medium voltage cable.

108-2.6 CONCRETE. Concrete for cable markers shall conform to Specification Item P-610, "Structural Portland Cement Concrete."

108-2.7 FLOWABLE BACKFILL. Flowable material used to backfill trenches for power cable trenches shall conform to the requirements of Item P-153 "Controlled Low Strength Material".

108-2.8 CABLE IDENTIFICATION TAGS. Cable identification tags shall by made from a non-corrosive material with the circuit identification stamped or etched onto the tag.

108-2.9 TAPE. Electrical tapes shall be Scotch Electrical Tapes – number Scotch 88 (1-1/2" wide) and Scotch 130C linerless rubber splicing tape (2" wide), as manufactured by the Minnesota Mining and Manufacturing Company, or approved equivalent.

108-2.10 ELECTRICAL COATING. Scotchkote™ shall be as manufactured by Minnesota Mining and Manufacturing Company, or approved equivalent.

108-2.11 EXISTING CIRCUITS. Whenever the scope of work requires, connection to an existing circuit, the circuit's insulation resistance shall be tested, in the presence of the Engineer. The test shall be performed in accordance with this item and prior to any activity affecting the respective circuit. The Contractor shall record the results on forms acceptable to the Engineer. When the work affecting the circuit is complete, the circuit's insulation resistance shall be checked again, in the presence of the Engineer. The Contractor shall record the results on forms acceptable to the engineer. The second reading shall be equal to or greater than the first reading or the Contractor shall make the necessary repairs to the circuit to bring the second reading above the first reading. All repair costs including a complete replacement of the L-823 connectors, L-830 transformers and L-824 cable, if necessary, shall be borne by the Contractor. All test results shall be submitted in the Operation and Maintenance (O&M) Manual.

108-2.12 FIBER OPTIC CABLING. NOT USED.

108-2.13 TRACING & IDENTIFYING EXISTING CIRCUITS TO BE RELOCATED. Since many of the existing circuits to be relocated are not tagged in the existing manholes and there may be abandoned and spare cables, it is the intent of this project to have the Contractor trace, identify and tag each of the existing circuits in the section to be relocated. This work shall also include identification of the 3 separate Owner fiber optic lines. This work shall be performed prior to any of the relocation work.

CONSTRUCTION METHODS

108-3.1 GENERAL. The Contractor shall install the specified cable at the approximate locations indicated on the plans. Unless otherwise shown on the plans, all cable required to cross under pavements expected to carry aircraft loads shall be installed in concrete encased duct banks. Wherever possible, cable shall be run without splices, from connection to connection.

Cable connections between lights will be permitted only at the light locations for connecting the underground cable to the primary leads of the individual isolation transformers. The Contractor shall be responsible for providing cable-in continuous lengths for home runs or other long cable runs without connections, unless otherwise authorized in writing by the Engineer or shown on the plans.

In addition to connectors being installed at individual isolation transformers, L-823 cable connectors for maintenance and test points shall be installed at locations shown on the plans. Cable circuit identification markers shall be installed on both sides of the L-823 connectors installed or at least once in each access point where L-823 connectors are not installed.

Provide not less than 3 feet of cable slack on each side of all connections, isolation transformers, light units, and at points where cable is connected to field equipment. Where provisions must be made for testing or for future above grade connections, provide enough slack to allow the cable to

be extended at least one foot vertically above the top of the access structure. This requirement also applies where primary cable passes through empty base cans, junction and access structures to allow for future connections, or as designated by the Engineer.

108-3.2 INSTALLATION IN DUCT BANKS OR CONDUITS. This item includes the installation of the cable in duct banks or conduit as described below. The maximum number and voltage ratings of cables installed in each single duct or conduit, and the current-carrying capacity of each cable shall be in accordance with the latest National Electric Code, or the code of the local agency or authority having jurisdiction.

The Contractor shall make no connections or splices-of any kind in cables installed in conduits or duct banks.

Unless otherwise designated in the plans, where ducts are in tiers, use the lowest ducts to receive the cable first, with spare ducts left in the upper levels. Check duct routes prior to construction to obtain assurance that the shortest routes are selected and interferences are avoided.

Duct banks or conduits shall be installed as a separate item in accordance with Item L-110, ``Airport Underground Electrical Duct Banks and Conduit." The Contractor shall run a mandrel through duct banks or conduit prior to installation of cable to insure that the duct bank or conduit is open, continuous and clear of debris. Mandrel size shall be compatible with conduit size. The Contractor shall swab out all conduits/ducts and clean base can, manhole, etc. interiors IMMEDIATELY prior to pulling cable. Once cleaned and swabbed the base cans and all accessible points of entry to the duct/conduit system shall be kept closed except when installing cables. Cleaning of ducts, base cans, manholes, etc. is incidental to the pay item of the item being cleaned. All raceway systems left open, after initial cleaning, for any reason shall be recleaned at the Contractor’s expense. All accessible points shall be kept closed when not installing cable. The Contractor shall verify existing ducts proposed for use in this project as clear and open. The Contractor shall notify the Engineer of any blockage in the existing ducts. The cable shall be installed in a manner to prevent harmful stretching of the conductor, injury to the insulation, or damage to the outer protective covering. The ends of all cables shall be sealed with moisture-seal tape providing moisture-tight mechanical protection with minimum bulk, or alternately, heat shrinkable tubing before pulling into the conduit and it shall be left sealed until connections are made. Where more than one cable is to be installed in a conduit, all cable shall be pulled in the conduit–at the same time. The pulling of a cable through duct banks or conduits may be accomplished by hand winch or power winch with the use of cable grips or pulling eyes. Maximum pulling-tensions shall-be governed by cable manufacturer’s recommendations. A non-hardening lubricant recommended for the type of cable being installed shall be used where pulling lubricant is required.

Contractor shall submit pulling tension values to the Engineer prior to any cable installation. If required by the Engineer, pulling tension values for cable pulls shall be monitored by a dynamometer in the presence of the Engineer. Cable pull tensions shall be recorded by the Contractor and reviewed by the Engineer. Cables exceeding the maximum allowable pulling tension values shall be removed and replaced by the Contractor at the Contractor’s expense.

The manufacturer's minimum bend radius or the NEC requirements whichever is more restrictive shall apply. Cable installation, handling and storage shall be per manufacturer's recommendations. During cold weather, particular attention shall be paid to the manufacturer's

minimum installation temperature. Cable shall not be installed when the temperature is at or below the manufacturer's minimum installation temperature. At the Contractor's option, the Contractor may submit a plan, for review by the Engineer, for heated storage of the cable and maintenance of an acceptable cable temperature during installation when temperatures are below the manufacturer's minimum cable installation temperature.

Cable shall not be dragged across base can or manhole edges, pavement or earth. When cable must be coiled, lay cable out on a canvas tarp or utilize other appropriate means to prevent abrasion to the cable jacket.

108-3.3 SPLICING. Connections of the type shown on-the plans shall be made by experienced personnel regularly engaged in this type of work and shall be made as follows:

a. Cast Splices. These shall be made by using crimp connectors for jointing conductors. Molds shall be assembled, and the compound shall be mixed and poured in accordance with manufacturer's instructions and to the satisfaction of the Engineer.

b. Field-attached Plug-in Splices. These shall be assembled in accordance with manufacturer's instructions. These splices shall be made by plugging directly into mating connectors. In all cases the joint where the connectors come together shall be wrapped with at least one layer of rubber or synthetic rubber tape and one layer of plastic tape, one-half lapped, extending at least 1-1/2 inches (37 mm) on each side of the joint.

c. Factory-Molded Plug-in Splices. These shall be made by plugging directly into mating connectors. In all cases, the joint where the connectors come together shall be wrapped with at least one layer of rubber or synthetic rubber tape and one layer of plastic tape, one-half lapped, extending at least 1-1/2 inches (37 mm) on each side of the joint.

d. Taped or Heat-Shrinked Splices. A taped splice shall be made in the following manner:

Bring the cables to their final position and cut so that the conductors will butt. Remove insulation and jacket allowing for bare conductor of proper length to fit compression sleeve connector with 1/4 inch (6 mm) of bare conductor on each side of the connector. Prior to splicing, the two ends of the cable insulation shall be penciled using a tool designed specifically for this purpose and for cable size and type. Do not use emery paper on splicing operation since it contains metallic particles. The copper conductors shall be thoroughly cleaned. Join the conductors by inserting them equidistant into the compression connection sleeve. Crimp conductors firmly in place with crimping tool that requires a complete crimp before tool can be removed. Test the crimped connection by pulling on the cable. Scrape the insulation to assure that the entire surface over which the tape will be applied (plus 3 inches (75 mm) on each end) is clean. After scraping wipe the entire area with a clean lint-free cloth. Do not use solvents.

Apply high-voltage rubber tape one-half lapped over bare conductor. This tape should be tensioned as recommended by the manufacturer. Voids in the connector area may be eliminated by highly elongating the tape, stretching it just short of its breaking point. Throughout the rest of the splice less tension should be used. Always attempt to exactly half-lap to produce a uniform buildup. Continue buildup to 1-1/2 times cable diameter over the body of the splice with ends tapered a distance of approximately 1 inch (25 mm) over the original jacket. Cover rubber tape

with two layers of vinyl pressure-sensitive tape one-half lapped. Do not use glyptol or lacquer over vinyl tape as they react as solvents to the tape. No further cable covering or splice boxes are required.

Heat shrinkable tubing shall be installed following manufacturer's instructions. Direct flame heating shall not be permitted unless recommended by the manufacturer. Cable surfaces within the limits of the heat-shrink application shall be clean and free of contaminates prior to application.

108-3.4A BARE COUNTERPOISE WIRE INSTALLATION FOR LIGHTNING PROTECTION AND GROUNDING. If shown on─the plans or included─in the job specifications, bare counterpoise copper wire shall be installed for lightning protection of the underground cables. Counterpoise wire shall be installed in the same trench for the entire length of buried cable, conduits and duct banks which are installed to contain airfield cables. Where the cable or duct/conduit trench runs parallel to the edge of pavement, the counterpoise shall be installed in a separate trench located half the distance between the pavement edge and the cable or duct/conduit trench. In trenches not parallel to pavement edges, counterpoise wire shall be installed continuously a minimum of 4 inches above the cable, conduit or duct bank, or as shown on the plans if greater. Additionally, counterpoise wire shall be installed at least 8 inches below the top of subgrade in paved areas or 10 inches below finished grade in un-paved areas. This dimension may be less than 4 inches where conduit is to be embedded in existing pavement. Counterpoise wire shall not be installed in conduit.

The counterpoise wire shall be routed around to each light fixture base, mounting stake, or junction/access structures. The counterpoise wire shall also be exothermically welded to-ground rods installed as shown on the plans but not more than 500 feet (150 m) apart around the entire circuit.

The counterpoise system shall be continuous and terminate at the transformer vault or at the power source. It shall be securely attached to the vault or equipment external ground ring or other made electrode grounding system. The connections shall be made as shown on-the plans and in the specifications.

A separate equipment (safety) ground system shall be provided in addition to the counterpoise wire using one of the following methods, as designated by the Engineer:

(1) A ground rod installed at and securely attached to each light fixture base, mounting stake if painted, and to all metal surfaces at junction/access structures.

(2). Install an insulated equipment ground conductor internal to the conduit system and securely attached it to each light fixture base and to all metal surfaces at junction/access structures.

a. Counterpoise Installation Above Multiple Conduits and Duct Banks. Counterpoise wires shall be installed above multiple conduits/duct banks for airfield lighting cables, with the intent being to provide a complete cone of protection over the airfield lighting cables. When multiple conduits and/or duct banks for airfield cable are installed in the same trench, the number and location of counterpoise wires above the conduits shall be adequate to provide a complete cone of protection measured 22 ½ degrees each side of vertical.

Where duct banks pass under pavement to be constructed in the project, the counterpoise shall be placed above the duct bank. Reference details on the construction plans.

b. Counterpoise Installation at Existing Duct Banks. When airfield lighting cables are indicated on the plans to be routed through existing duct banks, the new counterpoise wiring shall be terminated at ground rods at each end of the existing duct bank where the cables being protected enter and exit the duct bank. The new counterpoise conductor shall be bonded to the existing counterpoise system.

108-3.4B BARE COUNTERPOISE WIRE INSTALLATION FOR LIGHTNING PROTECTION AND GROUNDING FOR FAA FACILITIES. The counterpoise wire shall be embedded in the soil, a minimum of 10 inches (25 cm) above the cable to be protected and located directly above and parallel to the lines or cables being protected. When the width of the cable run or duct does not exceed 3 ft (90 cm), one counterpoise wire, centered over the cable run or duct, shall be installed. When the cable run or duct is more than 3 feet (90 cm) in width, two counterpoise wires shall be installed. The counterpoise wires shall be spaced at least 12 inches (30 cm) apart and be not less than 12 inches (30 cm) nor more than 18 inches (45 cm) inside the outermost wires or the edges of the duct. The counterpoise wire shall be bonded to the EES at each end and to ground rods at approximately 90-foot intervals using exothermic welds. The spacing between ground rods must vary by 10% to 20% to prevent resonance. Install the ground rods at approximately 6 feet (2 m) on either side of the trench. Where cables run parallel to the edge of a runway, they shall be located 10 feet from the edge lights on the outside of the lights.

108-3.5 EXOTHERMIC BONDING. Bonding of counterpoise wire shall be by the exothermic welding process. Only personnel experienced in and regularly engaged in this type of work shall make these connections.

Contractor shall demonstrate to the satisfaction of the Engineer, the welding kits, materials and procedures to be used for welded connections prior to any installations in the field. The installations shall comply with the manufacturer's recommendations and the following:

All slag shall be removed from welds.

For welds at light fixture base cans, all galvanized coated surface areas and "melt" areas, both inside and outside of base cans, damaged by exothermic bond process shall be restored by coating with a liquid cold-galvanizing compound conforming to U.S. Navy galvanized repair coating meeting Mil. Spec. MIL-P-21035. Surfaces to be coated shall be prepared and compound applied in accordance with manufacturer's recommendations.

All buried copper and weld material at weld connections shall be thoroughly coated 6 mil of 3M “Scotchkote,” or approved equivalent, or coated with coal tar bitumastic material to prevent surface exposure to corrosive soil or moisture."

108-3.6 TESTING. The Contractor shall furnish all necessary equipment and appliances for testing the airport electrical systems and underground cable circuits before and after installation. The Contractor shall perform all tests in the presence of the Engineer. The Contractor shall demonstrate the electrical characteristics to the satisfaction of the Engineer. All costs for testing

are incidental to the respective item being tested. For phased projects, the tests must be completed by phase and results meeting the specifications below must be maintained by the Contractor throughout the entire project as well as during the ensuing warranty period.

Earth resistance testing methods shall be submitted to the Engineer for approval. Earth resistance testing results shall be recorded on an approved form and testing shall be performed in the presence of the Engineer. All such testing shall be at the sole expense of the Contractor.

Should the counterpoise or ground grid conductors be damaged or suspected of being damaged by construction activities the Contractor shall test the conductors for continuity with a low resistance ohmmeter. The conductors shall be isolated such that no parallel path exists and tested for continuity. The Engineer shall approve the test method selected. All such testing shall be at the sole expense of the Contractor.

After installation, the-Contractor shall test and demonstrate to the satisfaction of the Engineer the following:

a. That all affected lighting power and control circuits (existing and new) are continuous and free from short circuits.

b. That all affected circuits (existing and new) are free from unspecified grounds.

c. That the insulation resistance to ground of all new non-grounded series circuits or cable segments is not less than 50 megohms.

d. That the insulation resistance to ground of all non-grounded conductors of new multiple circuits or circuit segments is not less than 50 megohms.

e. That all affected circuits (existing and new) are properly connected in accordance with applicable wiring diagrams.

f. That all affected circuits (existing and new) are operable. Tests shall be conducted that include operating each control not less than 10 times and the continuous operation of each lighting and power circuit for not less than 1/2 hour.

g. That the impedance to ground of each ground rod does not exceed 25 ohms prior to establishing connections to other ground electrodes. The fall-of-potential ground impedance test shall be utilized, as described by ANSI/IEEE Standard 81, to verify this requirement.

Two copies of tabulated results of all cable tests performed shall be supplied by the Contractor to the Engineer. Where connecting new cable to existing cable, ground resistance tests shall be performed on the new cable prior to connection to the existing circuit.

There are no approved "repair" procedures for items that have failed testing other than complete replacement.

108-3.7 CABLE REMOVAL IN EXISTING CONDUIT/DUCT BANK. Cabling within existing conduit shall be removed as designated on the Plans within the limits of the project, or as directed by the Engineer. While removing the cabling, a pull string shall be installed for the future

installation of the replacement cabling if necessary. All removed cable shall be properly disposed of off the Airport site.

108-3.8 FIBER OPTIC CABLE INSTALLATION. NOT USED

METHOD OF MEASUREMENT

108-4.1 An allowance of ***$5,000*** is provided for the tracing, location and identification of the existing cabling in the work areas of the cables to be replaced. This allowance assumes 80 standard rate hours and 20 premium rate hours at the Rhode Island Davis-Bacon wage rate for an electrician shown in Section 00 0725 Federal Wage Rates (or approximately 1 week of 2 electricians identifying and tracing the existing cabling). The measurement of work by the Contractor shall be for number of documented hours worked and approved by the Engineer and the actual documented and approved costs, without any markup, of the identification tag materials required to identify the cabling locations. However, any tracing equipment and all other incidental material items required to complete the work shall be considered incidental to the tracing and identification of the cabling item.

108-4.2 Cable or counterpoise wire installed in trench, duct bank or conduit shall be measured by the number of linear feet of cable or counterpoise wire installed in trenches, duct bank or conduit, including ground rods and grounding connectors, and trench marking tape ready for operation, and accepted as satisfactory. Separate measurement shall be made for each cable or counterpoise wire installed in trench, duct bank or conduit. The measurement for this item shall not include additional quantities required for connections within fixtures or slack. Cable and counterpoise slack is considered incidental to this item and is included in the Contractor's unit price. No separate measurement or payment will be made for cable or counterpoise slack.

108-4.3 Removal of cabling in conduit shall be paid for by the linear footage of cabling removed.

BASIS OF PAYMENT

108-5.1 Payment shall be made using the allowance for the tracing, locations and identification of existing cables work performed by the Contractor and approved by the Engineer as outlined above under the Method of Measurement. The amount paid to the Contractor shall be for number of documented hours worked and approved by the Engineer and the actual documented and approved costs, without any markup, of the identification tag materials required to permanently identify the cabling. However, any tracing equipment and all other incidental material items required to complete the work shall be considered incidental to the tracing and identification of the cabling item.

108-5.2 Payment will be made at the contract unit price for cable and bare counterpoise wire installed in trench (direct-buried), or cable and equipment ground installed in duct bank or conduit, in place by the Contractor and accepted by the Engineer. This price shall be full compensation for furnishing all materials and for all preparation and installation of these materials, and for all labor, equipment, tools, and incidentals, including ground rods and ground connectors and trench marking tape, necessary to complete this item.

108-5.3 Cabling removal in existing conduit shall be paid for at the contract unit price per linear foot. This price shall include removal of all cabling and other appurtenances associated with any

airfield electrical system, legally disposed of the removed cabling material off the site and providing a future pull string (if necessary), unless otherwise directed by the Engineer. The price shall be full compensation for furnishing all materials, labor, equipment, tools, and incidentals necessary to complete the item.

108-5.3 Direct bury cabling removal shall be paid for at the contract unit price per linear foot. This price shall include removal of all cabling and other appurtenances associated with any airfield electrical system, and legally disposed of the removed cabling material off the site, unless otherwise directed by the Engineer. The price shall be full compensation for furnishing all materials, labor, equipment, tools, and incidentals necessary to complete the item.

Payment will be made under:

Item L-108-5.1	Trace & Identify Existing Cables – *$5,000* Allowance
Item L-108-5.2	No. 8 AWG, L-824C, 5KV Cable installed in trench (direct buried) – per linear foot
Item L-108-5.3	No. 8 AWG, L-824C, 5KV Cable installed in duct or conduit – per linear foot
Item L-108-5.4	No. 6 AWG Bare Counterpoise Wire installed in trench, including ground rods and ground connectors– per linear foot
Item L-108-5.5	No. 2 AWG, 600V Cable installed in Duct or Conduit – per linear foot
Item L-108-5.6	No. 6G AWG, 600V Insulated Ground Wire installed in Duct or Conduit – per linear foot
Item L-108-5.7	Remove existing cable installed in duct or conduit – per linear foot
Item L-108-5.8	Remove existing cable installed in trench (direct buried) – per linear foot

MATERIAL REQUIREMENTS

AC 150/5345-7	Specification for L-824 Underground Electrical Cable for Airport Lighting Circuits
AC 150/5345-26	Specification for L-823 Plug and Receptacle Cable Connectors
Fed.Spec. A-A-59544	Cable and Wire, Electrical Power, Fixed Installation (replaced the cancelled J-C-30 Cable and Wire, Electrical (Power, Fixed Installation))
Fed. Spec A-A-55809	Insulation Tape, Electrical, Pressure-Sensitive Adhesive,

	Plastic
ASTM B 3	Soft or Annealed Copper Wire
ASTM D 4388	Rubber tapes, Nonmetallic Semiconducting and Electrically Insulating

REFERENCE DOCUMENTS

NFPA No. 70	National Electrical Code (NEC)
MIL-S-23586C	Sealing Compound, Electrical, Silicone Rubber
NN	Building Industry Consulting Service International (BICSI)
ANSI/IEEE Std 81	IEEE Guide for Measuring Earth Resistivity, Ground Impedance, and Earth Surface Potentials of a Ground System

END OF ITEM L-108

SECTION L-109
INSTALLATION OF AIRPORT VAULT EQUIPMENT

DESCRIPTION

109-1.1 This item shall consist of installing upgrades and modifications to the existing Airfield Lighting Control and Monitoring System (ALCMS). The existing ALCMS is a proprietary system manufactured by ADB (Siemens) with 3 control station locations. There is a computer control assembly in the airfield electrical vault, the RIAC Operations Center (in the Maintenance Building) and the Air Traffic Control Tower electrical/mechanical room with an additional "touch screen" control assembly in the air traffic controller cab. The ALCMS software modifications and hardware upgrades will be purchased directly by the Owner from ADB (Siemens) and will not be part of this contract.

However, the coordination with ADB (Siemens) and the Owner will be the responsibility of the Contractor. The Contractor shall assist ADB with any other items to have a properly installed and complete upgraded ALCMS, including start-up and any potential troubleshooting. It is the responsibility of the Contractor to coordinate with ADB to determine the required assistance to ensure for the properly installed and complete upgraded ALCMS. Also refer to paragraph 109-3.2 of this specification which outlines the Contractor's responsibilities.

This work item could also include furnishing and installing wiring, cable, conduit, circuit breakers, and grounding systems; and connecting and/or terminating existing control and monitoring wires to the upgraded ALCMS as necessary to assist ADB (Siemens) in completing the work. The Contractor's work shall include the marking and labeling of equipment and the labeling or tagging of wires; assist with the testing of the installation; and the furnishing of all incidentals necessary to place it in operating condition as a completed unit to the satisfaction of the Engineer. As part of the direct purchase from ADB, the system will include two (2) days (as scheduled by the Airport and do not have to be consecutive) of on-site training for Airport staff performed by an ADB representative. Also as part of the direct purchase, ADB shall prepare and furnish the Airport with three (3) electronic and three (3) paper copies of the new ALCMS system drawings.

EQUIPMENT AND MATERIALS

109-2.1 GENERAL.

a. Airport lighting equipment and materials covered by Federal Aviation Administration (FAA) specifications shall be certified and listed under Advisory Circular (AC) 150/5345-53, Airport Lighting Equipment Certification Program.

b. All other equipment and materials covered by other referenced specifications shall be subject to acceptance through manufacturer's certification of compliance with the applicable specification when requested by the Engineer.

c. Manufacturer's certifications shall not relieve the Contractor of the Contractor's responsibility to provide materials in accordance with these specifications and acceptable to the Engineer. Materials supplied and/or installed that do not materially comply with these specifications shall be removed, when directed by the Engineer and replaced with materials,

which do comply with these specifications, at the sole cost of the Contractor.

d. All materials and equipment used to construct this item shall be submitted to the Engineer for approval prior to ordering the equipment. Submittals consisting of marked catalog sheets or shop drawings shall be provided. Submittal data shall be presented in a clear, precise and thorough manner. Original catalog sheets are preferred. Photocopies are acceptable provided they are as good a quality as the original. Clearly and boldly mark each copy to identify pertinent products or models applicable to this project. Indicate all optional equipment and delete non-pertinent data. Submittals for components of electrical equipment and systems shall identify the equipment for which they apply on each submittal sheet. Markings shall be boldly and clearly made with arrows or circles (highlighting is not acceptable). Contractor is solely responsible for delays in project accruing directly or indirectly from late submissions or resubmissions of submittals.

e. The data submitted shall be sufficient, in the opinion of the Engineer, to determine compliance with the plans and specifications. The Engineer reserves the right to reject any and all equipment, materials or procedures, which, in the Engineer's opinion, does not meet the system design and the standards and codes, specified herein.

f. All equipment and materials furnished and installed under this section shall be guaranteed against defects in materials and workmanship for a period of at least twelve (12) months from final acceptance by the Owner. The defective materials and/or equipment shall be repaired or replaced, at the Owner's discretion, with no additional cost to the Owner.

109-2.2 RIGID STEEL CONDUIT. Rigid steel conduit and fittings shall be in accordance with Underwriters Laboratories Standard 6 and 514.

109-2.3 FAA-APPROVED EQUIPMENT. Certain items of airport lighting equipment installed in vaults are covered by individual FAA equipment specifications. The specifications are listed below:

- AC 150/5345-7 Specification for L-824 Underground Electrical Cable for Airport Lighting Circuits

109-2.4 AIRFIELD LIGHTING CONTROL AND MONITORING SYSTEM (ALCMS)

The existing ALCMS system is manufactured by ADB Airfield Solutions. The existing system consists of three (3) locations: 1) Air Traffic Control (ATC) Tower CAB and Computer Node, 2) Vault Node, and 3) OPS Node. As noted above, the existing system shall be upgraded by ADB Airfield Solutions (Siemens) with the as following components:

<u>ATC Tower Cab</u>:

1. Furnish and install one (1) new 19" Touchscreen with necessary assembly.

<u>ATC Tower Computer Node</u>:

1. Furnish NEMA 12 enclosure (24H x 24W x 12D) for new Tower Node equipment.
2. Furnish and install one (1) new 750 VA UPS unit and one (1) new spare 19" Touchscreen.
3. Furnish and install one (1) new embedded PC, keyboard and mouse with Flash Drives and

one (1) compact flash card to replace the existing PC.
4. Furnish and install two (2) new Media Converters (Single Mode Fiber Drivers).
5. Furnish and install one (1) new 8-port, 10/100BT, Ethernet Network Switch
6. IO module for beacon control
7. Furnish and install one (1) new 2.4 GHz Radio Communication Link (between Tower and Vault Only) with 60 ft. of LMR400 cable and Yagi antenna.

Vault Computer Node.:

1. Furnish ALCMS enclosure (NEMA 12) for new Vault Node equipment.
2. Furnish and install one (1) new Industrial PC, keyboard and mouse with Flash Drives and one (1) compact flash card to replace the existing PC.
3. Furnish and install two (2) new UPS units (1000 VA for PC components and 2200 VA for ACE Power units) and one (1) new 20" LCD Flat Screen Monitor.
4. Furnish and install three (3) new Media Converters (Single Mode Fiber Drivers).
5. Furnish and install new Ethernet Network Switches (ADB to confirm quantity of switches and ports required)
6. Furnish and install one (1) new 2.4 GHz Radio Communication Link (between Tower and Vault Only) with 60 ft. of LMR400 cable and Yagi antenna.
7. Remove Terminal Server and furnish and install new RS422 Fastcom Cards.

OPS Computer Node:

1. Furnish commercial enclosure (NEMA 12) for new Ops Node equipment.
2. Furnish and install one (1) new commercial PC, keyboard and mouse with Flash Drives and one (1) compact flash card to replace the existing PC.
3. Furnish and install one (1) new 750 VA UPS unit and one (1) new 20" LCD Flat Screen Monitor.
4. Furnish and install one (1) new Media Converter (Single Mode Fiber Driver) with Ethernet Switch Assembly.
5. Furnish and install one (1) new Black & White Laser Printer.

ADB will be responsible for performing the following item:

ADB shall set up the new computers in its lab and pre-load each with the latest software and configuration tools.

ADB shall perform a Factory Acceptance Test (FAT) on the new PC's before shipping.

ADB shall coordinate and plan with the Contractor to schedule the system installation and commissioning work. Coordination of the date for the switch over to the new system will be pending the completion of the Contractor's responsibilities as outlined under paragraph 109-3.2.

ADB shall travel to the Airport and coordinate on-site with the Contractor and ensure items are updated. (This travel is in addition to the required two (2) days for onsite training.)

ADB shall inspect the Contractor's computer system work and installation. Inform the Contractor of any deficiencies and incomplete work.

ADB shall perform an operational readiness test (ORT) to demonstrate proper operation prior to the system switch over.

ADB shall complete the commissioning of the control and monitoring system which includes:.

Install and setup computers, network equipment, printers and touchscreens.
Confirm proper location and installation of distributed control equipment/PLC equipment.
Power up and test distributed control/PLC equipment
Inspect Contractor's communication installation (fiber optics & radio backup)
Power up and test control system communication lines

ADB shall perform a lamps out calibration for all circuits having monitoring. Circuits must have final load configuration and be fully operational (all lamps burning).

ADB shall assist the Contractor with the computer system switch over.

ADB shall perform a System Acceptance Test (SAT) on the entire ALCMS system. Provide formal SAT record to the Engineer for system acceptance.

ADB shall remove the old Terminal Server and replace with high speed Fast Comm cards for vault communication to the CCR's.

ADB shall investigate the Airport's existing BRITE system and circuitry prior and ensure that the system is properly functioning, including replacement of any bad parts or pieces, and any required software reprogramming. There is a known issue with the software for the Runway Guard Lights of Runway 5-23 which will need to be addressed and corrected.

ADB shall interface with the proposed new RW-34 PAPI wireless relay system. The proposed wireless relay system (by the Contractor) shall receive ADB's ALCMS PAPI-34 contact closure signal. Units shall include enclosures, relays, power receptacles, wire management, termination strips, and all other components to complete the wireless connection.

ADB shall update ALCMS prints for TF Green State Airport with the latest configuration of equipment.

As noted above, ADB shall provide the required two (2) days of on-site training (which do not have to be consecutive days) which occur at a different time from the installation and commissioning of the equipment. ADB shall coordinate with the Contractor, ATC and Owner for a mutually agreeable time for the training.

ADB shall furnish at least three (3) copies of the upgraded ALCMS Instruction and Operation and Maintenance Manuals.

ADB shall provide at least copies of the As-Built drawings of the installed system.

109-2.6 OTHER ELECTRICAL EQUIPMENT. All regularly used commercial items of electrical equipment not covered by FAA equipment specifications shall conform to the applicable rulings and standards of the Institute of Electrical and Electronic Engineers or the National Electrical Manufacturers Association. When specified, test reports from a testing laboratory indicating that the equipment meets the specifications shall be supplied. In all cases, equipment shall be new and a first-grade product. This equipment shall be supplied in the quantities required for the specific project and shall incorporate the electrical and mechanical characteristics specified in the proposal and plans.

109-2.7 WIRE. Wire in conduit rated up to 5,000 volts shall conform to AC 150/5345-7, Specification for L-824 Underground Electrical Cables for Airport Lighting Circuits, for rubber insulated neoprene-covered wire, or Fed. Spec. J-C-30, Type RHW, for rubber insulated fibrous-covered wire. For ratings up to 600 volts, thermoplastic wire conforming to Fed. Spec. J-C-30, Types TW, THW, and THWN, shall be used. The wires shall be of the type, size, number of conductors, and voltage shown in the plans or in the proposal.

a. Control Circuits. Unless otherwise indicated on the plans, wire shall be not less than No. 12 AWG and shall be insulated for 600 volts.

109-2.8 FIBER OPTIC CABLING. Fiber optic cabling materials and installation shall conform to RIAC's *IT/Telecommunications Technical and Wiring Standards*, dated May 2010, available for review in the RIAC IT Office. Contact David Wilga, Chief Technology Officer at (401) 691-2240 for more information.

The fiber cabling shall be Berk-Tek's Adventum SingleMode cabling, unless otherwise approved. Only this specific brand of cabling is approved for installation in order to match the existing fiber optic cabling in the existing system.

Fiber optic patch panels should be installed in or adjacent to the equipment racks or cabinets which house LAN equipment. Connectors and couplers must be appropriate for terminating the fiber at ADB's ALCMS equipment (i.e. at fiber drivers, at fiber driver-switch combinations, etc.) supplied by ADB for the system upgrades. If given preference, the connectors and couplers shall be LC type for all new installations.

CONSTRUCTION METHODS

109-3.1 GENERAL. The Contractor shall furnish, install, and connect all equipment, equipment accessories, conduit, cables, wires, grounds, and support necessary to insure a complete and operable electrical distribution system for the airport lighting system as specified herein and shown in the plans.

The equipment installation and mounting shall comply with the requirements of the National Electrical Code and local code agency having jurisdiction.

109-3.2 CONTRACTOR INSTALLATION RESPONSIBILITIES. The Contractor's responsibility will include, but not limited, to the following items to ensure the complete installation of the ALCMS upgrades:

1. Provide manpower and escorts (as required) throughout the entire installation, commissioning and testing of the ALCMS equipment.
2. Coordinate on-site training activities between ADB and the Owner including ATC training, maintenance training and operations training.
3. Install all required conduit, wireway, wire and miscellaneous material required for a proper installation that meets all codes and safety. This includes installation of the computer cabinets.
4. Make all terminations between auxiliary relays/contact points/circuit cards and ACE™ units.
5. Properly locate and secure all computer cabinets and equipment in their final locations.

6. Provide input power for all equipment (PLC cabinets, computer cabinets, computers, printers, UPS's, etc.) from available panels or outlets. Refer to 109-3.3 - Contractor shall re-use existing power at each node location to the extent possible.
7. Provide proper grounding for all equipment.
8. It is assumed that fiber communications cable has been installed to the node locations. However, the Contractor shall provide and install any fiber patch panel, conduit and fiber patch cable between the existing patch panels and computer cabinet.
9. Perform all fiber communication terminations, including terminating all fiber strands with appropriate style connectors and connecting into fiber patch panel.
10. Perform fiber optic communication testing, including attenuation testing and generate test report for submission to the Engineer and ADB.
11. Provide and install all hard-wire communication and peripherals as needed for a complete communication system, including junction boxes/terminal boxes as required.
12. Install and terminate all cabling (including spares) between junction boxes and computer cabinet.
13. Provide and install radio antenna masts, if required, assuring direct line-of-sight between equipment.
14. Install all radio equipment, including radio antennas, masts, RF cabling, lightning arrestors and grounding system.
15. Install and make proper connections and water tight seals at antennas and lightning arrestors.
16. Install control panel(s) and/or Touchscreen(s) in the ATC Cab. There is an existing cabinet which may need retrofitting. The work shall include all carpentry-type work and material required to match existing cabinet/console installation in ATC Cab.
17. Provide all power requirements at the Touchscreen(s) and Tower coputer cabinet and install all cables between ATC Cab and tower computer cabinet.
18. Complete all airfield work such that all CCR loads are in their final configuration and circuits are fully operational (i.e. all lamps burning).
19. Provide lamp out calibration equipment including isolation transformer and light fixture for each type on the airfield. This work will normally be coordinated with the Airport maintenance personnel.
20. Provide the manpower to assist with the lamp out calibration as needed.
21. Coordinate and provide manpower for completion of the System Acceptance Test (SAT) assuring appropriate personnel are present to witness and authorize the test report.
22. Complete punch list items with the project requirements.
23. Provide project sign-off upon completion of all project equipment.

109-3.3 POWER SUPPLY EQUIPMENT. The Contractor shall re-use the existing power supply equipment for the existing Node locations.

109-3.4 WIRING AND CONNECTIONS. The Contractor shall make all necessary electrical connections for the ATCT CAB and Node, Operations and Maintenance building Node and Vault Node are in accordance with the wiring diagrams furnished by ADB and as directed by the Engineer. In wiring to the terminal blocks, the Contractor shall leave sufficient extra length on each control lead to make future changes in connections at the terminal block. This shall be accomplished by running each control lead the longest way around the box to the proper terminal. Leads shall be neatly laced in place.

109-3.5 MARKING AND LABELING. All equipment, control wires, terminal blocks, etc., shall be tagged, marked or labeled as specified below:

a. Wire Identification. The Contractor shall furnish and install self-sticking wire labels or identifying tags on all control wires at the point where they connect to the control equipment or to the terminal blocks. Wire labels, if used, shall be of the self-sticking preprinted type and of the manufacturer's recommended size for the wire involved. Identification -markings designated in the plans shall be followed. Tags, if used, shall be of fiber not less than ¾-inch (13 mm) in diameter and not less than 1/32-inch (1 mm) thick. Identification markings designated in the plans shall be stamped on tags by means of smalltool dies. Each tag shall be securely tied to the proper wire by a nonmetallic cord.

b. Labels. The Contractor shall stencil identifying labels on the cases of regulators, breakers, and distribution and control relay cases with white oil paint as designated by the Engineer. The letters and numerals shall be not less than 1 inch (25 mm) in height and shall be of proportionate width. The Contractor shall also mark the correct circuit designations in accordance with the wiring diagram on the terminal marking strips, which are a part of each terminal block.

109-3.6 FIELD QUALITY CONTROL. ADB will provide the services of a qualified factory-trained manufacturer's representative to assist the Contractor in installation and start-up of the regulator and connection to the existing control system components. The manufacturer's representative shall provide technical direction and assistance to the Contractor in general assembly of the equipment connections and adjustments, and participate in testing of the assembly and components contained therein.

The Contractor shall provide three (3) copies of the manufacturer's field start-up report before final payment is made.

109-3.7 MANUFACTURER'S CERTIFICATION. A qualified factory-trained manufacturer's representative shall certify in writing that the circuit components have been installed, adjusted, and tested in accordance with the manufacturer's recommendations.

The Contractor shall ensure that ADB has provided three (3) copies of the manufacturer's representative's certification before final payment is made.

METHOD OF MEASUREMENT

109-4.1. The quantity of vault equipment to be paid for under this item shall consist of all equipment and components installed, connected, and accepted as a complete unit ready for operation.

BASIS OF PAYMENT

109-5.1 Payment will be made at the contract Lump-Sum price for the completed and accepted vault equipment installation. This price shall be full compensation for furnishing all non-ADB furnished materials and for all coordination, ADB escorting, preparation, assembly assistance, and installation assistance of these materials, and for all labor, equipment, tools, and incidentals necessary to complete the item.

Payment will be made under:

L-109-1 Installation of Airport Vault Equipment in Place – per Lump Sum

MATERIAL REQUIREMENTS

FED SPEC J-C-30 Cable and Wire, Electrical (Power, Fixed Installation) (cancelled; replaced by AA-59544 Cable and Wire, Electrical (Power, Fixed Installation))

END OF SECTION L-109

ITEM L-110
AIRPORT UNDERGROUND ELECTRICAL DUCT BANKS AND CONDUITS

DESCRIPTION

110-1.1 This item shall consist of underground electrical conduits and duct banks (single or multiple conduits encased in concrete) installed or removed in accordance with this specification at the locations and in accordance with the dimensions, designs, and details shown on the plans. This item shall include furnishing and installing of all underground electrical duct banks and individual and multiple underground conduits. It shall also include all turfing trenching, backfilling, removal, and restoration of any paved or turfed areas; concrete encasement, mandreling, pulling lines, duct markers, plugging of conduits, and the testing of the installation as a completed system ready for installation of cables in accordance with the plans and specifications. This item shall also include furnishing and installing conduits and all incidentals for providing positive drainage of the system. Verification of existing ducts is incidental to the pay items provided in this specification.

EQUIPMENT AND MATERIALS

110-2.1 GENERAL.

a. All equipment and materials covered by referenced specifications shall be subject to acceptance through manufacturer's certification of compliance with the applicable specification when so requested by the Engineer.

b. Manufacturer's certifications shall not relieve the Contractor of the Contractor's responsibility to provide materials in accordance with these specifications and acceptable to the Engineer. Materials supplied and/or installed that do not materially comply with these specifications shall be removed, when directed by the Engineer and replaced with materials, which do comply with these specifications, at the sole cost of the Contractor.

c. All materials and equipment used to construct this item shall be submitted to the Engineer for approval prior to ordering the equipment. Submittals consisting of marked catalog sheets or shop drawings shall be provided. Submittal data shall be presented in a clear, precise and thorough manner. Original catalog sheets are preferred. Photocopies are acceptable provided they are as good a quality as the original. Clearly and boldly mark each copy to identify pertinent products or models applicable to this project. Indicate all optional equipment and delete non-pertinent data. Submittals for components of electrical equipment and systems shall identify the equipment for which they apply on each submittal sheet. Markings shall be boldly and clearly made with arrows or circles (highlighting is not acceptable). Contractor is solely responsible for delays in project accruing directly or indirectly from late submissions or resubmissions of submittals.

d. The data submitted shall be sufficient, in the opinion of the Engineer, to determine compliance with the plans and specifications. The Engineer reserves the right to reject any and all equipment, materials or procedures, which, in the Engineer's opinion, does not meet the system design and the standards and codes, specified herein.

e. All equipment and materials furnished and installed under this section shall be guaranteed against defects in materials and workmanship for a period of at least twelve (12) months from final acceptance by the Owner. The defective materials and/or equipment shall be repaired or replaced, at the Owner's discretion, with no additional cost to the Owner.

110-2.2 STEEL CONDUIT. Rigid galvanized steel conduit and fittings shall be hot dipped galvanized inside and out and conform to the requirements of Underwriters Laboratories Standard 6, 514B, and 1242.

110-2.3 PLASTIC CONDUIT. Plastic conduit and fittings-shall conform to the requirements of Fed Spec. W-C-1094, Underwriters Laboratories Standards UL-651 and Article 347 of the current National Electrical Code shall be one of the following, as shown on the plans:

a. Type I -Schedule 40 PVC suitable for underground use either direct-buried or encased in concrete.

b. Type II - Schedule 40 PVC suitable for either above ground or underground use.

The type of adhesive shall be as recommended by the conduit/fitting manufacturer.

110-2.4 SPLIT CONDUIT. Split conduit shall be pre-manufactured for the intended purpose and shall be made of steel or plastic.

110-2.5 CONDUIT SPACERS. Conduit spacers shall be prefabricated interlocking units manufactured for the intended purpose. They shall be of double wall construction made of high grade, high density polyethylene complete with interlocking cap and base pads, They shall be designed to accept No. 4 reinforcing bars installed vertically.

110-2.6 CONCRETE. Concrete shall conform to Item P-610, Structural Portland Cement Concrete, using 1-inch maximum size coarse aggregate with a minimum 28 day compressive strength of 4,000 psi. Where reinforced duct banks are specified, reinforcing steel shall conform to ASTM A 615 Grade 60. Concrete and reinforcing steel are incidental to the respective pay item of which they are a component part.

110-2.7 FLOWABLE BACKFILL. Flowable material used to backfill conduit and duct bank trenches shall conform to the requirements of Item P-153 "Controlled Low Strength Material".

110-2.8 DETECTABLE WARNING TAPE. Plastic, detectable, color as noted magnetic tape shall be polyethylene film with a metallized foil core and shall be 4-6 inches (75-150 MM) wide. Detectable tape is incidental to the respective bid item.

CONSTRUCTION METHODS

110-3.1 GENERAL. The Contractor shall install underground duct banks and conduits at the approximate locations indicated on the plans. The Engineer shall indicate specific locations as the work progresses, if required to differ from the plans. Duct banks and conduits shall be of the

size, material, and type indicated on the plans or specifications. Where no size is indicated on the plans or in the specifications, conduits shall be not less than 2 inches (50 mm) inside diameter or comply with the National Electrical Code based on cable to be installed, whichever is larger. All duct bank and conduit lines shall be laid so as to grade toward access points and duct or conduit ends for drainage. Unless shown otherwise on the plans, grades shall be at least 3 inches (75 mm) per 100 feet (30 m). On runs where it is not practicable to maintain the grade all one way, the duct bank and conduit lines shall be graded from the center in both directions toward access points or conduit ends, with a drain into the storm drainage system. Pockets or traps where moisture may accumulate shall be avoided. Unless otherwise shown on the plans no duct bank or underground conduit shall be less than 18 inches below finished grade. Where under pavement, the top of the duct bank shall not be less than 18 inches below the subgrade.

The Contractor shall mandrel each individual conduit whether the conduit is direct-buried or part of a duct bank. An iron-shod mandrel, not more than 1/4-inch (6 mm) smaller than the bore of the conduit shall be pulled or pushed through each conduit. The mandrel shall have a leather or rubber gasket slightly larger than the conduit hole.

The Contractor shall swab out all conduits/ducts and clean base can, manhole, pull boxes, etc. interiors IMMEDIATELY prior to pulling cable. Once cleaned and swabbed the base cans, manhole, pull boxes, etc. and all accessible points of entry to the duct/conduit system shall be kept closed except when installing cables. Cleaning of ducts, base cans, manholes, etc. is incidental to the pay item of the item being cleaned. All raceway systems left open, after initial cleaning, for any reason shall be recleaned at the Contractor's expense. All accessible points shall be kept closed when not installing cable. The Contractor shall verify existing ducts proposed for use in this project as clear and open. The Contractor shall notify the Engineer of any blockage in the existing ducts.

For pulling the permanent wiring, each individual conduit, whether the conduit is direct-buried or part of a duct bank, shall be provided with a 200 pound test polypropylene pull rope. The ends shall be secured and sufficient length shall be left in access points to prevent it from slipping back into the conduit. Where spare conduits are installed, as indicated on the plans, the open ends shall be plugged with removable tapered plugs, designed for this purpose.

All conduits shall be securely fastened in place during construction and shall be plugged to prevent contaminate from entering the conduits. Any conduit section having a defective joint shall not be installed. Ducts shall be supported and spaced apart using approved spacers at intervals not to exceed 5 feet.

Unless otherwise shown on the plans, concrete encased duct banks shall be utilized when crossing under pavements expected to carry aircraft loads.

Where turf is well established and the sod can be removed, it shall be carefully stripped and properly stored.

Trenches for conduits and duct banks may be excavated manually or with mechanical trenching equipment unless in pavement, in which case they shall be excavated with mechanical trenching equipment. Walls of trenches shall be essentially vertical so that a minimum of shoulder surface is disturbed. Blades of graders shall not be used to excavate the trench.

When rock is encountered, the rock shall be removed to a depth of at least 3 inches below the required conduit or duct bank depth and it shall be replaced with bedding material of earth or sand containing no mineral aggregate particles that would be retained on a 1/4-inch sieve. Flowable backfill may alternatively be used The Contractor shall ascertain the type of soil or rock to be excavated before bidding.

Underground electrical warning (caution) tape shall be installed in the trench above all underground duct banks and conduits in unpaved areas. Contractor shall submit a sample of the proposed warning tape for approval by the Engineer. If not shown on the plans, the warning tape shall be located six inches above the duct/conduit or the counterpoise wire if present.

Joints in plastic conduit shall be prepared in accordance with the manufacturer's recommendations for the particular type of conduit. Plastic conduit shall be prepared by application of a plastic cleaner and brushing a plastic solvent on the outside of the conduit ends and on the inside of the couplings. The conduit fitting shall then be slipped together with a quick one-quarter turn twist to set the joint tightly. Where more than one conduit is placed in a single trench, or in duct banks, joints in the conduit shall be staggered a minimum of 2 feet.

Changes in direction of runs exceeding 10 degrees, either vertical or horizontal, shall be accomplished using manufactured sweep bends.

Whether or not specifically indicated on the drawings, where the soil encountered at established duct bank grade is an unsuitable material, as determined by the Engineer, the unsuitable material shall be removed in accordance with Item P-152 and replaced with suitable material. Alternatively, additional duct bank supports that are adequate and stable shall be installed, as approved by the Engineer.

All excavation shall be unclassified and shall be considered incidental to the respective L-110 pay item of which it is a component part. Dewatering necessary for duct installation, erosion and turbidity control, in accordance with Federal, State, and Local requirements is incidental to its respective pay item as a part of Item L-110. The cost of all excavation regardless of type of material encountered shall be included in the unit price bid for the L-110 Item.

Unless otherwise specified, excavated materials which are deemed by the Engineer to be unsuitable for use in backfill or embankments shall be removed and disposed of off site.

Any excess excavation shall be filled with suitable material approved by the Engineer and compacted in accordance with item P-152.

It is the Contractor's responsibility to locate existing utilities within the work area prior to excavation. Where existing active cables(s) cross proposed installations, the Contractor shall insure that these cable(s) are adequately protected. Where crossings are unavoidable, no splices will be allowed in the existing cables, except as specified on the plans. Installation of new cable where such crossings must occur shall proceed as follows:

(1) Existing cables shall be located manually. Unearthed cables shall be inspected to assure absolutely no damage has occurred

(2) Trenching, etc., in cable areas shall then proceed with approval of the Engineer, with care taken to minimize possible damage or disruption of existing cable, including careful backfilling in area of cable.

In the event that any previously identified cable is damaged during the course of construction, the Contractor shall be responsible for the complete repair.

110-3.2 DUCT BANKS. Unless otherwise shown in the plans, duct banks shall be installed so that the top of the concrete envelope is not less than 18 inches (45 cm) below the bottom of the base or stabilized base course layers where installed under runways, taxiways, aprons, or other paved areas, and not less than 18 inches (45 cm) below finished grade where installed in unpaved areas.

Unless otherwise shown on the plans, duct banks under paved areas shall extend at least 10 feet (300 cm) beyond the edges of the pavement or 8 feet (240 cm) beyond any underdrains which may be installed alongside the paved area. Trenches for duct banks shall be opened the complete length before concrete is placed so that if any obstructions are encountered, proper provisions can be made to avoid them. Unless otherwise shown on the plans, all duct banks shall be placed on a layer of concrete not less than 3 inches (75 mm) thick prior to its initial set. Where two or more conduits in the duct bank are intended to carry conductors of equivalent voltage insulation rating, the Contractor shall space the conduits not less than 3 inches (75 mm) apart (measured from outside wall to outside wall). Where two or more conduits in the duct bank are intended to carry conductors of differing voltage insulation rating, the Contractor shall space the conduits not less than 3 inches apart (measured from outside wall to outside wall). All such multiple conduits shall be placed using conduit spacers applicable to the type of conduit. As the conduit laying progresses, concrete shall be placed around and on top of the conduits not less than 3 inches (75 mm) thick unless otherwise shown on the plans. End bells or couplings shall be installed flush with the concrete encasement at access points.

Conduits forming the duct bank shall be installed using conduit spacers. No. 4 reinforcing bars shall be driven vertically into the soil a minimum of 6 inches to anchor the assembly into the earth prior to placing the concrete encasement. For this purpose, the spacers shall be fastened down with locking collars attached to the vertical bars. Spacers shall be installed at 5 -foot intervals. Spacers shall be in the proper sizes and configurations to fit the conduits. Locking collars and spacers shall be submitted to the Engineer for review prior to use.

When specified, the Contractor shall reinforce the bottom side and top of encasements with steel reinforcing mesh or fabric or other approved metal reinforcement. When directed, the Contractor shall supply additional supports where the ground is soft and boggy, where ducts cross under roadways, or where shown on the plans. Under such conditions, the complete duct structure shall be supported on reinforced concrete footings, piers, or piles located at approximately 5 foot (150 cm) intervals.

All pavement surfaces that are to have ducts installed therein shall be neatly saw cut to form a vertical face. All excavation shall be included in the contract with price for the duct.

Install a plastic, detectable, color as noted, 4-6 inch (75-150mm) wide tape 8 inches (200mm) minimum below grade above all underground conduit or duct lines not installed under pavement.

When existing cables are to be placed in split duct, encased in concrete, the cable shall be carefully located and exposed by hand tools. Prior to being placed in duct, the Engineer shall be notified so that he may inspect the cable and determine that it is in good condition. Where required, split duct shall be installed as shown on the drawings or as required by the Engineer.

110-3.3 CONDUITS WITHOUT CONCRETE ENCASEMENT. Trenches for single-conduit lines shall be not less than 6 inches (150 mm) nor more than 12 inches (300 mm) wide, and the trench for 2 or more conduits installed at the same level shall be proportionately wider. Trench bottoms for conduits without concrete encasement shall be made to conform accurately to grade so as to provide uniform support for the conduit along its entire length.

Unless otherwise shown on the plans, a layer of sand, soft earth or other fine material, at least 4 inches (100 mm) thick (loose measurement) shall be placed in the bottom of the trench as bedding for the conduit. The bedding material shall consist of soft dirt, sand or other fine fill, and it shall contain no particles that would be retained on a 1/4-inch (6 mm) sieve. The bedding material shall be tamped until firm. Flowable backfill may alternatively be used.

Unless otherwise shown on plans, conduits shall be installed so that the tops of all conduits are at least 18 inches (45 cm) below the finished grade.

When two or more individual conduits intended to carry conductors of equivalent or differing voltage insulation rating are installed in the same trench without concrete encasement, they shall be spaced not less than 3 inches (75 mm) apart (measured from outside wall to outside wall) in a horizontal direction and not less than 6 inches (150 mm) apart in a vertical direction.

Trenches shall be opened the complete length between normal termination points before conduit is installed so that if any unforeseen obstructions are encountered, proper provisions can be made to avoid them.

Conduits shall be installed using conduit spacers. No. 4 reinforcing bars shall be driven vertically into the soil a minimum of 6 inches to anchor the assembly into the earth while backfilling. For this purpose, the spacers shall be fastened down with locking collars attached to the vertical bars. Spacers shall be installed at 5 -foot intervals. Spacers shall be in the proper sizes and configurations to fit the conduits. Locking collars and spacers shall be submitted to the Engineer for review prior to use.

110-3.4 MARKERS. The location of each end and of each change of direction of conduits and duct banks shall be marked by a concrete slab marker 2 feet (60 cm) square and 4-6 inches (100-150 mm) thick extending approximately 1 inch (25 mm) above the surface. The markers shall also be located directly above the ends of all conduits or duct banks, except where they terminate in a junction/access structure or building.

The Contractor shall impress the word “DUCT” or “CONDUIT” on each marker slab. The Contractor shall also impress on the slab the number and size of conduits beneath the marker along with all other necessary information as determined by the Engineer. The letters shall be 4 inches (100 mm) high and 3 inches (75 mm) wide with width of stroke 1/2-inch (12 mm) and 1/4-

inch (6 mm) deep or as large as the available space permits. Furnishing and installation of duct markers is incidental to the respective duct pay item.

110-4.5 BACKFILLING FOR CONDUITS. For conduits, 4 inches (100 mm) of sand, soft earth, or other fine fill (loose measurement) shall be placed around the conduits ducts and carefully tamped around and over them with hand tampers. The remaining trench shall then be backfilled and compacted in accordance with Item P-152 "Excavation and Embankment" except that material used for backfill shall be select material not larger than 2 inches in diameter.

Flowable backfill may alternatively be used.

Trenches shall not contain pools of water during backfilling operations.

The trench shall be completely backfilled and tamped level with the adjacent surface: except that, where sod is to be placed over the trench, the backfilling shall be stopped at a depth equal to the thickness of the sod to be used, with proper allowance for settlement.

Any excess excavated material shall be removed and disposed of in accordance with instructions issued by the Engineer.

110-3.6 BACKFILLING FOR DUCT BANKS. After the concrete has cured, the remaining trench shall be backfilled and compacted in accordance with Item P-152 “Excavation and Embankment” except that the material used for backfill shall be select material not larger than 2 inches in diameter. In addition to the requirements of P-152, where duct banks are installed under pavement, one moisture/density test per lift shall be made for each 100 linear feet of duct bank or one work period's construction, whichever is less.

Flowable backfill may alternatively be used.

Trenches shall not contain pools of water during backfilling operations.

The trench shall be completely backfilled and tamped level with the adjacent surface: except that, where sod is to be placed over the trench, the backfilling shall be stopped at a depth equal to the thickness of the sod to be used, with proper allowance for settlement.

Any excess excavated material shall be removed and disposed of in accordance with instructions issued by the Engineer.

110-3.7 RESTORATION. Where sod has been removed, it shall be replaced as soon as possible after the backfilling is completed. All areas disturbed by the work shall be restored. The restoration shall include topsoiling, fertilizing, liming, seeding & mulching as per specifications T-905 & T-906. The Contractor shall be held responsible for maintaining all disturbed surfaces and replacements until final acceptance. All restoration shall be considered incidental to the respective L-110 pay item.

METHOD OF MEASUREMENT

110-4.1 Underground conduits and duct banks shall be measured by the linear feet of conduits and duct banks installed, including sweeps and other fittings (if required), encasement, locator

tape, trenching and backfill with designated, and resolution, all measured in place, completed, and accepted. Separate measurement shall be made for the various types and sizes.

110-4.2 Cable/Conduit/Duct Bank Markers shall be measured by each marker measured in place, completed, and accepted. No separate measurement shall be made for the different marker types.

110-4.3 Removal of underground conduits and duct banks shall be measured by the linear feet of conduits and duct banks, including encasement, locator tape, trenching, backfill with designated material, and resolution, all measured in place, completed, and accepted. No separate measurement shall be made for the various types and sizes.

110-4.4 Removal of electrical junction can/handhole shall be measured by each for electrical junction can/handhole, including junction can encasement, excavation, backfill with designated material, and resolution, all measured in place, completed, and accepted. No separate measurement shall be made for the various types and sizes.

BASIS OF PAYMENT

110-5.1 Payment will be made at the contract unit price per linear foot for each type and size of conduit and duct bank completed and accepted, including trench and backfill with the designated material, unless otherwise shown on the Plans or directed by the Engineer. This price shall be full compensation for furnishing all materials and for all preparation, assembly, and installation of these materials, and for all labor, equipment, tools, and incidentals necessary to complete this item in accordance with the provisions and intent of the plans and specifications.

110-5.2 Payment will be made at the contract unit price per each for a cable/conduit/ duct bank marker completed and accepted, including trench and backfill with the designated material. This price shall be full compensation for furnishing all materials and for all preparation and installation of these materials, and for all labor, equipment, tools, and incidentals necessary to complete this item in accordance with the provisions and intent of the plans and specifications.

110-5.3 Payment will be made at the contract unit price per linear foot for conduit or duct bank removal which has been completed and accepted, including trenching, removal and proper disposal of the conduit or duct bank materials, and backfill with the designated material. This price shall be full compensation for furnishing all materials and for all preparation and installation of these materials, and for all labor, equipment, tools, and incidentals necessary to complete this item in accordance with the provisions and intent of the plans and specifications.

110-5.4 Payment will be made at the contract unit price per each for electrical junction can/handhole removal which has been completed and accepted, including but not limited to, excavation, removal and proper disposal of the junction can/handhole materials, and backfill with the designated material. This price shall be full compensation for furnishing all materials and for all preparation and installation of these materials, and for all labor, equipment, tools, and incidentals necessary to complete this item in accordance with the provisions and intent of the plans and specifications.

Payment will be made under:

Item L-110-5.1A	2-Inch Diameter Schedule 40 PVC Conduit, direct buried -- per linear foot
Item L-110-5.1B	2-Inch Diameter Schedule 40 PVC Conduit, encased in concrete -- per linear foot
Item L-110-5.1C	2-Way Concrete Encased Duct Bank (4-inch) – per linear foot
Item L-110-5.1D	4-Way Concrete Encased Duct Bank (4-inch) – per linear foot
Item L-110-5.2	Cable/Conduit/Duct Bank Markers – per each
Item L-110-5.3	Removal of Electrical Conduit and Duct Bank – per linear foot
Item L-110-5.4	Removal of Electrical Handhole/Junction Can – per each

MATERIAL REQUIREMENTS

Fed.Spec.W-C-1094	Conduit and Conduit Fittings; Plastic, Rigid (cancelled; replaced by UL 514 Boxes, Nonmetallic Outlet, Flush Device Boxes, & Covers, and UL 651 Standard for Conduit & Hope Conduit, Type EB & A Rigid PVC)
Underwriters Laboratories Standard 6	Rigid Metal Conduit
Underwriters Laboratories Standard 514B	Fittings for Cable and Conduit
Underwriters Laboratories Standard 651	Schedule 40 and 80 Rigid PVC Conduit (for Direct Burial)
Underwriters Laboratories Standard 651A	Type EB and A Rigid PVC Conduit and HDPE Conduit (for concrete encasement)

END OF ITEM L-110

ITEM L-125
INSTALLATION OF AIRPORT LIGHTING SYSTEMS

DESCRIPTION

125-1.1 This item shall consist of furnishing and installing elevated quartz L-861T, quartz L-862, and quartz L-862E airport edge/threshold lights, junction cans, and guidance signs; relocating guidance signs; and removing lights and signs in accordance with these specifications.

The systems shall be installed, relocated or removed as shown in the plans.

This item shall also include all wire and cable connections, the furnishing and installing of all necessary conduits and fittings and all necessary mounting structures. It shall also include the testing of the installation and all incidentals necessary to place the lights and signs in operation as completed units to the satisfaction of the Engineer.

The Owner retains the right to salvage any usable equipment; however for bidding purposes the Contractor shall assume that all removed electrical equipment shall be disposed of by the Contractor at areas off the Airport property.

EQUIPMENT AND MATERIALS

125-2.1 GENERAL.

a. Airport lighting equipment and materials covered by Federal Aviation Administration (FAA) specifications shall have the prior approval of the FAA, and are listed in Advisory Circular (AC) 150/5345-53, Airport Lighting Equipment Certification Program.

b. All other equipment and materials covered by other referenced specifications shall be subject to acceptance through manufacturer's certification of compliance with the applicable specification when requested by the Engineer.

c. Manufacturer’s certifications shall not relieve the Contractor of the Contractor’s responsibility to provide materials in accordance with these specifications and acceptable to the Engineer. Materials supplied and/or installed that do not materially comply with these specifications shall be removed, when directed by the Engineer and replaced with materials, which do comply with these specifications, at the sole cost of the Contractor.

d. All materials and equipment used to construct this item shall be submitted to the Engineer for approval prior to ordering the equipment. Submittals consisting of marked catalog sheets or shop drawings shall be provided. Submittal data shall be presented in a clear, precise and thorough manner. Original catalog sheets are preferred. Photocopies are acceptable provided they are as good a quality as the original. Clearly and boldly mark each copy to identify pertinent products or models applicable to this project. Indicate all optional equipment and delete non-pertinent data. Submittals for components of electrical equipment and systems shall identify the equipment for which they apply on each submittal sheet. Markings shall be boldly and clearly made with arrows or circles (highlighting is not acceptable). Contractor is solely responsible for delays in project accruing directly or indirectly from late submissions or resubmissions of submittals.

e. The data submitted shall be sufficient, in the opinion of the Engineer, to determine compliance with the plans and specifications. The Engineer reserves the right to reject any and all equipment, materials or procedures, which, in the Engineer's opinion, does not meet the system design and the standards and codes, specified herein.

f. All equipment and materials furnished and installed under this section shall be guaranteed against defects in materials and workmanship for a period of at least twelve (12) months from final acceptance by the Owner. The defective materials and/or equipment shall be repaired or replaced, at the Owner's discretion, with no additional cost to the Owner.

125-2.2 EDGE LIGHTS. The edge lights shall conform to the requirements of AC 150/5345-46, Specification for Runway and Taxiway Light Fixtures; and FAA Engineering Brief No. 67 "Light Sources other than Incandescent and Xenon for Airport Lighting and Obstruction Lighting Fixtures."

- **RUNWAY EDGE LIGHTS.** The basis for design L-862 elevated runway edge light shall be as follows. The lamp shall be 120W/6.6A quartz. The lens color shall be as shown in the plans. The runway edge light fixture height shall be as shown in the plans with 1.5" coupling, 12 TPI. The runway edge lights shall be ETL certified.
- **RUNWAY THRESHOLD/END LIGHTS.** The basis for design L-862E elevated runway end light shall be as follows. The lamp shall be 200W/6.6A quartz. The lens color shall be split with red/green, as shown in the plans. The runway end light fixture height shall be as shown in the plans with 1.5" coupling, 12 TPI. The runway end lights shall be ETL certified.
- **TAXIWAY EDGE LIGHTS.** The basis for design L-861T taxiway edge light shall be as follows. The taxiway edge lights shall be 30W/6.6A quartz. The lens color shall be omnidirectional blue. The taxiway edge light fixture height shall be as shown in the plans with 1.5" coupling, 12 TPI. The taxiway edge lights shall be ETL certified.

125-2.3 AIRFIELD GUIDANCE SIGNS. The airfield guidance signs shall conform to the requirements of AC 150/5345-44 (latest revision), Specification for Runway and Taxiway Signs.

- **NEW AIRFIELD GUIDANCE SIGNS.** The Contractor shall provide new airfield guidance signs as shown on the plans in the Guidance Sign Replacement Schedule. The guidance sign number of modules and faces shall be as shown in the plans. The Contractor shall confirm sign type, size, style, class, and mode shall be as shown on the signage schedule. Guidance Sign Panels shall conform to L-858Y or L-858R or L-858L requirements. The basis for design for the L-858 guidance sign shall be as follows. The guidance sign shall be Halogen lamp type, sign size 3 (30" with an 18" legend), style 3 (5-step), class 2 (-67 deg. F (-55 deg. C.)), power through leg with ON/OFF switch, and one tether on one end of sign. The guidance sign shall be ETL certified.
- **REPLACE EXISTING AIRFIELD GUIDANCE SIGN PANELS.** The Contractor shall provide replacement panels for existing airfield guidance signs as shown on the plans as stated in the Guidance Sign Panel Replacement Schedule. The existing airfield guidance sign shall re-use the existing sign frame and other sign system components including, but not limited to, the base/support structure, base cans, conduit/conduit fittings, and grounding, as well as panel legends not identified to be replaced in the Guidance Sign Panel Replacement Schedule. The upgraded sign shall be provided with new isolation

transformers and internal electrical components/halogen lamping. The existing sign manufacturer, type, size, and mode shall be as shown in the Sign Panel Replacement Schedule. All replacement equipment/materials, including panel legends, isolation transformers and internal electrical component/lamping shall be compatible with the existing sign manufacturer. The Contractor shall verify the inventory of the sign panels to be replaced and shall coordinate the ordering of parts with the manufacturer of the existing sign.

- **RELOCATE EXISTING AIRFIELD GUIDANCE SIGN.** The Contractor shall relocate existing airfield guidance signs as shown on the plans. The existing airfield guidance sign components to be re-used shall include the sign frame and supports, internal electrical wiring and lamping, panel legends, foundation base/support structure and base can. The relocated sign shall be retrofitted with new isolation transformers, lamps, conduit extensions/conduit fittings, and grounding. All retrofit equipment/materials shall be compatible with the existing sign manufacturer. The Contractor shall verify the sign to be relocated and shall coordinate the ordering of parts with the manufacturer of the existing sign.

125-2.4 ISOLATION TRANSFORMERS. The isolation transformers shall conform to the requirements of AC 150/5345-47 (latest edition), Specification for Series to Series Isolation Transformers for Airport Lighting Systems.

- **RUNWAY EDGE LIGHTS.** The basis for design isolation transformer serving L-862 (QUARTZ) elevated runway edge lights shall be as follows (Contractor shall confirm): L-830-18, 150 Watts, 60 Hz, 6.6A/6.6A.
- **RUNWAY END LIGHTS.** The basis for design isolation transformer serving L-862E (QUARTZ) elevated runway end lights shall be as follows (Contractor shall confirm): L-830-6, 200 Watts, 60 Hz, 6.6A/6.6A.
- **TAXIWAY EDGE LIGHTS.** The basis for design isolation transformer serving L-861T (QUARTZ) elevated taxiway edge lights shall be as follows (Contractor shall confirm): L-830-1, 30/45 Watts, 60 Hz, 6.6A/6.6A.
- **GUIDANCE SIGNS.** The Contractor shall provide new isolation transformers as recommended by the sign manufacturer for both new and relocated signs. The new isolation transformers shall be properly sized for the electrical load of the sign and shall match the amperage of the circuit. The Contractor shall verify the individual sign loads for the wattage of the transformer and lamps of the existing sign.

125-2.5 TAPE. Electrical tape shall conform to L-108, "Installation of Underground Cable for Airports."

125-2.6 CONCRETE. All concrete for work under this section shall conform to Item P-610, Structural Portland Cement Concrete, using ¾-inch maximum size coarse aggregate.

125-2.7 CONDUIT. Conduit shall conform to L-110, “Airport Underground Electrical Duct Banks and Conduits.”

125-2.8 SQUEEZE CONNECTORS. Squeeze connectors, where shown or specified, shall be equal to Crouse-Hinds Company, Type CGB cable connector with neoprene rubber bushing.

125-2.9 HEAT SHRINK WRAP. All splice connections shall be sealed with heat applied "shrink wrap" tubing as manufactured for use on Series Lighting Circuits. Each end of the tubing shall have adhesive on the interior that flows when heated to seal any void.

125-2.10 LIGHT IDENTIFICATION TAGS. I.D. tags attached to the light fixture are not required for taxiway or runway lighting; however I.D. tag information (i.e. fixture number) shall be stenciled with paint on pavement or fixed portion of the light base. Stencil shall match existing light I.D. format and font type and size. RIAC Operations/Maintenance shall provide the numbering system for the stencil.

125-2.11 SIGN IDENTIFICATION TAGS. I.D. tags are required for the new guidance signs; the I.D. tag information shall include the circuit name and circuit number (i.e. RW 16-34). The I.D. tags shall be 2" diameter non-corrosive brass tag with the numbers/letters stamped or permanently etched into the tag. The tags shall be securely attached to the sign unit with a screw or wire band.

125-2.12 HEAVY DUTY LIGHT BASES. Light bases for flush mounted edge lights shall conform to the requirements of FAA Specification L-868 (Load Bearing) and shall be L-868, Class I, Size B (12 inch diameter).

125-2.13 JUNCTION BOXES (CANS). Junction boxes shall conform to the requirements of FAA Specification L-867 (Non-Load Bearing) and shall be L-867, Class I, Size B (12 inch diameter).

125-2.14 GROUND RODS AND #6 AWG PIGTAILS. Ground Rods and #6 AWG Bare Copper Pigtails shall be as indicated on the drawing.

125-2.15 PAVEMENT SENSORS. In order to match the existing system pavement sensors, the pavement sensor shall be a model FP2000 as manufactured by Vaisala, Inc. These new pavement sensors shall meet the following technical requirements:

- Surface Temperature Range: -60°F to 176°F (-51°C to +80°C)
- Depth of Solution: 0.02 inches to 0.5 inches (0.03 cm to 1.27 cm)
- Operating Temperature Range: -40°F to 176°F (-40°C to +80°C)
- Cable Length: 150, 300 or 500 feet (46, 91 or 152 meters) with Vaisala Type IIA; 5000 feet (1524 meters) with splice
- Mean Time Between Failures: 40,000 hours

The contact information for the manufacturer is:

Vaisala, Inc. – Boston
10-D Gill Street
Woburn, MA 01801
Phone: (781) 933-4500
Email: weathersales.northamerica@vaisala.com

As part of the submittal process, the Contractor shall provide the following information:

a. Material data sheet for pavement sensor, cables, conduits and sealants
b. Proposed installation schedule
c. Written calibration and test procedure for each component of the system
d. Provide the proposed method and materials to backfill pavement cores and sawcuts

required to install pavement sensors and sensor cables

CONSTRUCTION METHODS

125-3.1 GENERAL. The installation and testing details for the systems shall be as specified in the applicable advisory circulars and the contract documents.

125-3.2 PLACING EDGE/END LIGHTS AND GUIDANCE SIGNS. The light fixtures and signs shall be installed at the locations indicated in the plans. The exact location shall be as directed by the Engineer.

125-3.3 ELECTRICAL CONNECTION. The Contractor shall furnish all labor and materials and shall make complete electrical connections in accordance with the wiring diagram furnished with the project plans. The electrical installation shall conform to the requirements of the latest edition of National Fire Protection Association, NFPA-70, National Electric Code.

125-3.4 REMOVALS. All light fixtures and signs shown on the plans to be removed shall be removed including the light, base, transformers, light circuit and conduit, and any miscellaneous equipment. All existing light fixtures, along with all isolation transformers will be turned over to the Owner. The light bases shall be disposed of off airport property by the Contractor and at no expense to the Owner. All removals shall be backfilled as required in accordance with the specifications for Item P-152, Excavation and Embankment, and restored in accordance with other pay items.

125-3.5 RELOCATIONS. All light fixture and signs shown on the plans to be relocated shall be dismantled and the existing foundation relocated, or replaced at the contractor’s option. The existing sign/light fixture shall be reinstalled on the relocated foundation and power reconnected per the plans. All voids resulting from the relocated fixture shall be backfilled as required in accordance with the specifications for Item P-152, Excavation and Embankment, and restored in accordance with Items T-905 and T-906. Any signs that are damaged by the Contractor's operations shall be replaced at no additional cost to the project.

125-3.6 SIGN PANEL REPLACEMENTS. All sign panel replacements shown on the plans shall have the existing panels removed and be disconnected to the circuit power in the base can, as well as have the internal electrical and lamping removed. The existing sign shall remain on the existing foundation, have the internal electrical components replaced, have the identified panels replaced, install a new isolation transformer, and power reconnected as indicated in the Plans. All bolts, nuts and other fasteners shall be stainless steel and coated with an anti-seizing compound prior to installation. Any signs or sign components that are damaged by the Contractor's operations shall be replaced at no additional cost to the project.

125-3.7 INSTALLATION OF LIGHT BASES (ELEVATED EDGE/END LIGHTS & JUNCTION BOXES). The new light bases or junction cans shall be installed at the locations indicated on the drawings. The exact location and elevation of the light bases shall be determined in the field by the Contractor based on final grades.

Each light base or junction box shall be installed in accordance with the details shown on the

Contract Drawings and shall be placed on bedding material and backfilled with material consisting of hard, durable particles so graded that 100% will pass a 1/4 inch sieve, and not more than 20% will pass a #200 sieve and shall be free from loam, silt, clay, or organic matter.

125-3.8 MOUNTING FIXTURES. All light fixtures shall be mounted securely to the light base in accordance with the manufacturer's recommendations with stainless steel bolts with at least 1" extension below the flange depths and covered with an anti-seizing compound.

125-3.9 GROUNDING. Each light fixture and sign shall be grounded in accordance with the details as shown on the Contract Drawings.

125-3.10 INSTALLING ISOLATION TRANSFORMERS. The isolation transformer for new base mounted elevated lights and guidance signs shall be installed per FAA requirements. Transformers shall be place on a brick in such manner as not to block the drain.

125-3.11 TAPING CONNECTIONS. All L-823 connections shall be taped with one inner layer of rubber or synthetic rubber tape as specified above and one outer layer of plastic tape. The taping shall be one-half lapped and extend 1/2 inches to each side of the connection joint. All L-823 connector/cable joints shall be sealed with heat shrink wrap. The plug/receptacle mating shall not be shrink wrapped.

125-3.12 INSTALLATION OF PAVEMENT SENSORS. The new in-pavement pavement sensors shall be installed at the locations indicated on the drawings and in accordance with the manufacturer's (Vaisala) instructions, requirements and recommendations for installation. The new pavement sensors replace existing pavement sensors. New cable and terminations/connections, as required by the manufacturer (Vaisala), shall be installed between the existing remote processing unit and the new pavement sensors. The exact location and elevation shall be verified in the field by the Contractor, with approval from the Engineer, based on final grades around the sensor and the routing of the existing cabling. The Contractor shall identify all existing utilities prior to installation. Damage to existing utilities shall be repaired to the satisfaction of the Engineer at the Contractor's expense.

Calibration and testing of the new sensor by the sensor vendor (Vaisala) shall be performed following the installation of the new sensor. The Contractor and the Vendor's representative shall perform the testing in the presence of the Engineer and Owner's representative in accordance with the manufacturer's written testing procedures. The Contractor shall provide at least 72 hours of notice prior to the testing and calibration.

METHOD OF MEASUREMENT

125-4.1 The quantity of light fixtures, junction cans or signs installed or removed, to be paid for under this item shall be the number of each type installed or removed, and accepted by the Engineer. As noted above, the Owner shall have the first right of refusal for the salvaging of the materials. If the Owner does not desire to salvage the materials, the Contractor shall properly dispose of the materials off the site.

125-4.2 The installation of new guidance signs shall be in accordance with the manufacturer's recommended installation procedures and including guidance sign removal, proper storage of new

sign materials; excavation for new foundation and new foundation; backfill material and compaction; disconnection and reconnection of electrical wires; new sign panels with the appropriate attachment hardware; and all other incidental items in order for the new guidance sign to be tested and ready for operation.

125-4.3 The installation of sign replacement panels shall be in accordance with the manufacturer's recommended installation procedures and including, but not limited to: guidance sign panel and other replaced system parts removal, proper storage of the replacement components; disconnection and reconnection of electrical wires; new sign panels with the appropriate attachment hardware; and all other incidental items in order for the upgraded guidance sign to be tested and ready for operation.

125-4.4 The quantity of pavement sensors installed to be paid for under this item shall be the number of installed and accepted by the Engineer. As part of the installation, the removal of the existing sensor shall be considered part of this item. As noted above, the Owner shall have the first right of refusal for the salvaging of the materials. If the Owner does not desire to salvage the materials, the Contractor shall properly dispose of the materials off the site. The measurement shall be for furnishing and installing the pavement sensors including the pavement coring, sawcutting, sensor, sensor cabling, conduit materials from the pavement to the junction can, epoxy filler, and all other incidental items required for a complete installation. The measurement shall also include all calibration and testing of the pavement sensor by the vendor’s representative.

125-4.5 The relocation of existing signs shall be in accordance with the manufacturer's recommended installation procedures, including guidance sign removal; proper storage of the sign materials; excavation for the re-use and relocation of the existing sign foundation; backfill material and compaction; disconnection and reconnection of electrical wires; new electrical components; re-install existing sign panels with new appropriate attachment hardware; and all other incidental items in order for the relocated guidance sign to be tested and ready for operation.

BASIS OF PAYMENT

125-5.1 Payment will be made at the contract unit price for each complete light fixture or junction base can installed and accepted by the Engineer. This price shall be full compensation for all labor, equipment, tools, excavation, backfill and compaction and incidentals necessary to complete this item.

125-5.2 Payment will be made at the contract unit price for each sign which is shown to be installed by the Contractor and accepted by the Engineer as a complete installation. This price shall be full compensation for all labor, equipment, tools, excavation, all new materials (i.e. panels, foundations, etc.), backfill materials, backfill and compaction, and incidentals necessary to complete this item to the satisfaction of the Engineer.

125-5.3 Payment will be made at the contract unit price for each sign panel replacement which is shown to be removed and re-installed by the Contractor and accepted by the Engineer as a complete removal and re-installation. This price shall be full compensation for all labor, equipment, tools, excavation, disposal or salvaged of the materials, all new materials (i.e. panels, isolation transformer, internal electrical components, lamping, etc.), and incidentals necessary to complete this item to the satisfaction of the Engineer.

125-5.4 Payment will be made at the contract unit price for each complete pavement sensor installed and accepted by the Engineer. This price shall be full compensation for all labor, materials, equipment, tools, removal of existing pavement sensor, excavation, backfill and compaction and incidentals necessary to complete this item. The payment shall also include all calibration and testing of the pavement sensor by the vendor's representative.

125-5.5 Payment will be made at the contract unit price for each light fixture or light fixture and base can which is removed by the Contractor and accepted by the Engineer. This price shall be full compensation for all labor, equipment, tools, excavation, disposal or salvage of the materials, backfill and compaction and incidentals necessary to complete this item.

125-5.6 Payment will be made at the contract unit price for each sign which is shown to be removed by the Contractor and accepted by the Engineer as a complete removal. This price shall be full compensation for all labor, equipment, tools, excavation, disposal or salvaged of the materials, backfill materials, backfill and compaction, and incidentals necessary to complete this item to the satisfaction of the Engineer.

125-5.7 Payment will be made at the contract unit price for each sign which is shown to be relocated by the Contractor and accepted by the Engineer as a complete removal. This price shall be full compensation for all labor, equipment, tools, excavation, removal and storage of the materials, re-installation of the materials, new materials, backfill materials, backfill and compaction, and incidentals necessary to complete this item to the satisfaction of the Engineer.

Payment will be made under:

Item L-125-5.1A	L-862 High Intensity Base Mounted Quartz Runway Edge Light Installed – per each
Item L-125-5.1B	L-862E High Intensity Base Mounted Quartz Runway End Light Installed – per each
Item L-125-5.1C	L-861T Medium Intensity Base Mounted Quartz Taxiway Edge Light Installed – per each
Item L-125-5.1D	Junction Base Cans – per each
Item L-125-5.2	Install New Airfield Guidance Sign – per each
Item L-125-5.3	Airfield Guidance Sign Panel Replacement – per each
Item L-125-5.4	Install Pavement Sensors – per each
Item L-125-5.5A	Remove Existing Light – per each
Item L-125-5.5B	Remove Existing Light & Base Can – per each
Item L-125-5.6	Remove Existing Airfield Guidance Sign – per each
Item L-125-5.7	Relocate Existing Distance Remaining Sign – per each

END OF ITEM L-125

ITEM L-127
PRECISION APPROACH PATH INDICATORS (PAPI)

DESCRIPTION

127-1.1 This item shall consist of removing the existing Visual Approach Slope Indicator (VASI) systems on the Runway 34 End and furnishing and installing a new Precision Approach Path Indicators (PAPI) system on the Runway 34 End in accordance with these specifications and in accordance with the dimensions, design, details and at the locations shown in the Plans, or otherwise directed by the Engineer.

This item shall also include furnishing and installing the specified lighting equipment, wire and concrete foundations. This item shall also include all cable connections, conduit and conduit fittings, the furnishing and installation of all lamps, ground rod and ground connection, the testing of the installation, and all incidentals necessary to place the PAPI systems in operation as completed units to the satisfaction of the Engineer.

The PAPI controls shall be a wireless point-to-point PAPI control. This wireless point-to-point PAPI control item shall consist of performing a professional RF study between the existing airfield electrical vault building and the new PAPI control cabinet; furnishing and installing a new wireless relay system between the existing airfield electrical vault building and the new PAPI control cabinet including antennas and cabling on the sending device end (vault building) and receiving end (PAPI control cabinet); and extending a 120VAC (or as recommended by the wireless bridge manufacturer) power circuit to each end of the wireless relay system.

EQUIPMENT AND MATERIALS

127-2.1 GENERAL.

a. Airport lighting equipment and materials covered by Federal Aviation Administration (FAA) specifications shall be certified and listed under Advisory Circular (AC) 150/5345-53, Airport Lighting Equipment Certification Program.

b. All other equipment and materials covered by other referenced specifications shall be subject to acceptance through manufacturer's certification of compliance with the applicable specification when requested by the Engineer.

c. Manufacturer's certifications shall not relieve the Contractor of the Contractor's responsibility to provide materials in accordance with these specifications and acceptable to the Engineer. Materials supplied and/or installed that do not materially comply with these specifications shall be removed, when directed by the Engineer and replaced with materials, which do comply with these specifications, at the sole cost of the Contractor.

d. All materials and equipment used to construct this item shall be submitted to the Engineer for approval prior to ordering the equipment. Submittals consisting of marked catalog sheets or shop drawings shall be provided. Submittal data shall be presented in a clear, precise and thorough manner. Original catalog sheets are preferred. Photocopies are acceptable provided they are as good a quality as the original. *Clearly* and **boldly** mark each copy to

identify pertinent products or models applicable to this project. Indicate all optional equipment and delete non-pertinent data. Submittals for components of electrical equipment and systems shall identify the equipment for which they apply on each submittal sheet. Markings shall be boldly and clearly made with arrows or circles (highlighting is not acceptable). Contractor is solely responsible for delays in project accruing directly or indirectly from late submissions or resubmissions of submittals.

e. The data submitted shall be sufficient, in the opinion of the Engineer, to determine compliance with the plans and specifications. The Engineer reserves the right to reject any and all equipment, materials or procedures, which, in the Engineer's opinion, does not meet the system design and the standards and codes, specified herein.

f. All equipment and materials furnished and installed under this section shall be guaranteed against defects in materials and workmanship for a period of at least twelve (12) months from final acceptance by the Owner. The defective materials and/or equipment shall be repaired or replaced, at the Owner's discretion, with no additional cost to the Owner.

127-2.2 PAPI. The PAPI systems shall conform to the requirements of AC 150/5345-28 (latest revision), Precision Approach Path Indicator (PAPI) Systems.

The basis for design PAPI system shall consist of four (4) light units, each with two (2) lamps and three (3) legs per light unit; and a power and control unit. A PAPI photocell for automatic day/night intensity control shall be integral to each system. The PAPI system shall be Style A, 240V (maximum nominal line current shall be 7.0A at 240V), 1-Phase, 60Hz, Temperature Class 2 (-55°C), with protective lens cover. Each PAPI system shall also include one (1) aiming device, field splice kits, and one (1) instruction manual. The PAPI system shall be ETL certified.

127-2.3 WIRELESS POINT-TO-POINT PAPI CONTROL SYSTEM. The wireless point-to-point PAPI control systems consist of the following:

- **RF STUDY** - An RF Study shall be performed by a professional entity, with previous experience performing RF Studies, preferably with previous experience on Airports. The RF study shall include an onsite analysis conducted between the existing airfield electrical vault and the proposed new PAPI control cabinet location, and shall verify that line-of-sight is available, measure distance to be served by a wireless system, and take point-to-point frequency measurements. Photos shall be taken. Measurements and photos shall be incorporated into a report, along with the recommended wireless equipment and frequency spectrum to be installed and used. Recommended frequency shall not impact or cause interference on existing FAA or Airport equipment.
- **WIRELESS RELAY** - Wireless relay or wireless module system shall be by Phoenix Contact, or National Control Devices, LLC, or an equivalent. Wireless system shall be capable of interfacing with the Airport's existing Airport Lighting Control and Monitoring System (ALCMS) and accepting a contact closure signal and transmitting it wirelessly over a distance to be confirmed by an RF Study (estimated at 4,900 LF point-to-point). Wireless system shall include, but not be limited to, two (2) antennas (one on sending end and one on receiving end), (2) transceivers (transmitter and receiver), I/O (input-output) modules (as required to interface with the PAPI power contactor), wireless connection status indicator lights, circuit breakers/circuit protection, transformers,

mounting equipment, temperature conditioned enclosure,, earthwork, frangible couplings and base/foundation, and all incidentals necessary to provide a complete wireless system. Wireless vendor shall be responsible for visiting the site, and becoming familiar with the existing ALCMS and the environment in which the equipment is to be installed. Wireless vendor shall furnish complete shop drawings and wire diagrams of the system beginning at control signal input from the ALCMS down to the control signal output to a power contactor at the proposed new PAPI control cabinet.

- **POWER SUPPLY** - Contractor shall provide 120VAC power supply from the proposed new PAPI control cabinet to the new wireless system, including all required conduit and power cables. Contractor shall also be responsible for restoration of earth associated with related trenching.

127-2.4 CABLE. Cable shall conform to L-108, "Installation of Underground Cable for Airports."

127-2.5 OTHER ELECTRICAL EQUIPMENT. Distribution transformers, contactors, safety switches, and all other regularly used commercial items of electrical equipment not covered by FAA equipment specifications shall conform to the applicable rulings and standards of the Institute of Electrical and Electronic Engineers or the National Electrical Manufacturers Association. When specified, test reports from a testing laboratory indicating that the equipment meets the specifications shall be supplied. In all cases, equipment shall be new and a first-grade product. This equipment shall be supplied in the quantities required for the specific project and shall incorporate the electrical and mechanical characteristics specified in the proposal and plans. Equipment shall be as shown on the plans and installed in accordance with the NEC and shall be UL Listed. Equipment shall be rated for the environment in which it is installed, i.e. NEMA 1 enclosure for indoor installation, NEMA 3R enclosure for outdoor installation.

126-2.6 TAPE. Electrical tape shall conform to L-108, "Installation of Underground Cable for Airports."

126-2.7 CONCRETE. All concrete for work under this section shall conform to Item P-610, Structural Portland Cement Concrete, using 3/4-inch maximum size coarse aggregate.

127-2.8 CONDUIT. Conduit shall conform to L-110, “Airport Underground Electrical Duct Banks and Conduits.”

127-2.9 SQUEEZE CONNECTORS. Squeeze connectors, where shown or specified, shall be equal to Crouse-Hinds Company, Type CGB cable connector with neoprene rubber bushing.

127-2.10 TOPSOIL, SEEDING, AND MULCHING. Topsoil, seeding, and mulching shall conform to T-905, “Topsoiling”, T-901 “Seeding”, and T-908 “Mulching.”

CONSTRUCTION METHODS

127-3.1 GENERAL. The PAPI system shall be furnished and installed as specified and shown in the plans. The Contractor shall install a laminated card on the inside of each of the light units with the applicable angle and height information. The card is intended to serve as a future reference.

127-3.2 PLACING PAPI UNITS. The PAPI shall be mounted on a concrete base at the

approximate locations indicated in the Plans. The exact location shall be as directed by the Engineer. The PAPI shall be vertically aligned according to the requirements in the plans using the aiming device provided by the manufacturer. The tilt switch shall be leveled on all PAPI light units according to the manufacturer's instructions.

127-3.3 ELECTRICAL CONNECTION. The Contractor shall furnish all labor and materials and shall make complete electrical connections in accordance with the wiring diagram furnished with the project plans. The electrical installation shall conform to the requirements of the latest edition of National Fire Protection Association, NFPA-70, National Electric Code.

The cable and duct from the electrical service pole at the end of Lake Shore Drive to the PAPI control pedestal shall be installed in accordance with and paid for as described in Item L-108, Underground Power Cables for Airports, and Item L-110, Airport Underground Electrical Duct Banks and Conduits.

As part of the electrical connection, the utility company may require a fee for the electrical connection at the service pole at the end of Lake Shore Drive for work associated with the electrical feed modifications. The coordination with the utility company to perform this work shall be considered incidental to the work, but the fee for the utility company may be charged as part of an allowance in this contract.

127-3.4 TESTS. The PAPI systems shall be fully tested by continuous operation for not less than 24 hours as a completed system prior to acceptance. The test shall include the functioning of each intensity control not less than 10 times at the beginning and end of the 24-hour test. The Contractor shall prepare a certified test report to include the type of test, and the time and date of each of the tests.

127-3.5 REMOVALS. All existing VASI fixtures shown on the plans to be removed shall be removed by the Contractor, including the fixture base or foundations, transformers, power circuit and conduit, and any miscellaneous equipment. The Owner shall have the right-of-first-refusal with regard to the VASI light units and salvaged to them if desired. Otherwise, the materials removed shall be disposed of off airport property by the Contractor and at no expense to the Owner. All removals shall be backfilled in accordance with Item P-152 and restored in accordance with Items T-905 and T-906.

127-3.6 PAPI CONTROLS. The existing VASI control pedestal shall relocated and be reused, if size allows, to serve as part of the new PAPI control system.

METHOD OF MEASUREMENT

127-4.1 The quantity to be paid for under this item shall be the quantity of PAPI systems installed as a completed set in place, ready for operation, and accepted by the Engineer.

127-4.2 The quantity to be paid for under this item shall be the quantity of PAPI system control installed as a lump sump for a completed system in place, ready for operation, and accepted by the Engineer.

127-4.3 The quantity to be paid for under this item shall be the quantity of VASI systems removed as a completed set as accepted by the Engineer. The intent is for the complete VASI system for the Runway 34 End shall be included in the set (i.e. both VASI units).

127-4.4 An allowance of ***$2,000*** is provided for the estimated fees associated with the utility company for the power feed modifications at the service pole at the end of Lake Shore Drive. The amount paid to the Contractor shall be the exact amount indicated on the Contractor's service order invoice without markup.

BASIS OF PAYMENT

127-5.1 Payment will be made at the contract unit price for each completed PAPI system installed as a completed set in place by the Contractor and accepted by the Engineer. This price shall be full compensation for furnishing all materials and for all preparation, assembly, and installation of these materials, and for all labor, equipment, foundations, excavation, backfill, tools, and incidentals necessary to complete this item.

127-5.2 Payment will be made at the contract unit price for the completed PAPI control system installed as a lump sum for a completed system in place by the Contractor and accepted by the Engineer. This price shall be full compensation for removing all specified materials and for all labor, equipment, tools, excavation, backfill, and incidentals necessary to complete this item.

127-5.3 Payment will be made at the contract unit price for the VASI system removed as a complete unit as a set by the Contractor and accepted by the Engineer. This price shall be full compensation for removing all specified materials and for all labor, equipment, tools, excavation, backfill, and incidentals necessary to complete this item.

127-5.4 An allowance of ***$2,000*** is provided for the estimated fees associated with the utility company associated with the power feed modifications at the service pole at the end of Lake Shore Drive. The amount paid to the Contractor shall be the exact amount indicated on the Contractor's service order invoice without markup. Costs incurred by the Contractor for coordination shall be considered incidental to other various unit contract prices for the project.

Payment will be made under:

Item L-127-5.1	Install New Precision Approach Path Indicator (PAPI) – per set.
Item L-127-5.2	Install New Precision Approach Path Indicator (PAPI) Wireless Controls – per lump sum
Item L-127-5.3	Remove Existing Visual Approach Slope Indicator (VASI) – per set.
Item L-127-5.4	Utility Fees - ***$2000*** Allowance

PAGE LEFT BLANK INTENTIONALLY

ITEM L-853
RETROREFLECTIVE EDGE MARKERS

CONTRACT DOCUMENTS

853-00.1 This section of these specifications is part of the Contract Documents as defined in the General Provisions. All applicable parts of the balance of the Contract Documents are equally as binding for this section as for all other sections.

DESCRIPTION

L-853-1.1 This item shall consist of retroreflective edge markers installed in accordance with this specification and the locations and in accordance with the dimensions and details shown on the plans. It shall also include the installation of anchors and appurtenances necessary required to place the markers as a completed edge delineation system.

EQUIPMENT AND MATERIALS

L-853-2.1 GENERAL. All retroreflective markers shall meet the requirements of FAA Advisory Circular (AC) 150/5345-39B, or latest revision for Type II, Elevated Edge Markers. Markers shall be subject to acceptance through manufacturer's certification of compliance as requested by the Engineer. Manufacturers shall be listed as approved suppliers in AC 150/5345-1 or latest revision.

L-853-2.3 ENVIRONMENTAL REQUIREMENTS. Retroreflective markers shall withstand the following environmental requirements.

- **A.** Temperature: Any temperatures between 65˚ C and -55˚ C.
- **B.** Corrosion. Exposure to salt spray.
- **C.** Humidity: Any relative humidity between 10 and 95 percent.

L-853-2.4 RETROREFLECTIVE SHEETING. The reflective sheeting shall pass the tests listed for reflectivity 2 or reflectivity 4 sheeting material in Federal Specification L-S-300.

L-853-2.5 MOUNTING. The elevated marker mounting system shall be specifically designed for paved or unpaved areas. The mounting system shall withstand a wind loading of 100 miles per hour without permanent deformation and shall retain its original position and shape in winds up to 50 miles per hour.

L-853-2.6 FRANGIBILITY. The marker shall be designed so as to not damage an aircraft if it is struck. The marker shall be flexible or mounted with a frangible fitting.

L-853-2.7 METAL. All metal shall either be noncorrodible or be plated to resist corrosion.

CONSTRUCTION

L-853-3.1 GENERAL. The Contractor shall install markers at the locations indicated on the plans. Mounting systems shall be specifically selected for each location. Refer to the drawings for specific information with regard to size and colors of edge markers.

METHOD OF MEASUREMENT

L-853-4.1 The quantity of retroreflective edge markers to be paid for shall be the quantity of each marker type installed as a completed unit in place and accepted by the Engineer.

METHOD OF PAYMENT

L-853-5.1 Payment shall be made at the contract unit price for each completed retroreflective marker unit in place and accepted by the Engineer. The price shall be full compensation for furnishing all materials, and for all labor, equipment, tools, and incidentals necessary to complete the items.

Payment will be made under:

L-853-5.1 Retroreflective Edge Markers – per each

MATERIAL REFERENCES

Advisory Circular (AC) 150/5345-39C Runway and Taxiway Retroreflective Markers

Advisory Circular (AC) 150/5345-1 Approved Airport Lighting Equipment

END OF ITEM L-853

SECTION 202

EXCAVATION AND EMBANKMENT AND ON-SITE WETLANDS FILL

202.01 DESCRIPTION. This work consists of excavation, and the satisfactory placement and compaction, or disposal, of all materials encountered within the limits of the work and which are necessary for the construction of the roadway. Excavation and embankment shall be in reasonably close conformity with the dimensions and sections indicated on the Plans or as directed by the Engineer, all in accordance with these Specifications.

The work under on-site wetlands fill shall include salvaging, stockpiling and spreading Wetland Soil in the wetland restoration area along Buckeye Brook (Mitigation Site 3). The restoration areas shall be partially revegetated with Wetland Plants excavated from wetland areas that are within the proposed stream cross sections as indicated on the plans.

Prior to commencing stream/wetland restoration construction, the Contractor shall implement his/her erosion and sediment control plan as specified and approved by the Engineer. Existing wetland areas outside the limits of road removal, stream channel construction, and wetland restoration and enhancement areas shall not be disturbed.

Excavation will be classified as "earth excavation," "muck excavation," "channel excavation-earth," "loam excavation," and "unclassified excavation," all as hereafter described.

202.01.1 Earth Excavation. Earth excavation shall include the removal of suitable and unsuitable soils not otherwise classified herein, and the removal of boulders and rock fragments less than 1 cubic yard in volume, from the following areas:

a. Within the design excavation section.

b. Beyond the design excavation section of the roadbed or side slopes where unsuitable materials are encountered.

c. Beyond the design excavation section of shallow embankments when unsuitable materials are encountered.

202.01.2 Unsuitable Soils. Unsuitable soils shall include and are hereby defined as those soils, other than muck, which due to their consolidation properties, degree of saturation, gradation, or other deleterious characteristics will not provide a stable subgrade or side slopes; cannot be used as, or support embankment, or cannot be placed and compacted as backfill, or do not otherwise conform to the requirements of these Specifications.

202.01.3 Muck Excavation. Muck excavation shall consist of the removal and disposal of deposits of saturated or unsaturated mixtures of soils and organic matter not suitable for foundation material regardless of moisture content. The excavated muck shall be stockpiled at approved locations within the right-of-way and/or legally disposed of.

202.01.4 Channel Excavation Earth. Channel excavation earth shall include all materials other than water or "Channel Excavation Rock," removed from existing, new, or temporary water courses as indicated on the Plans or as directed by the Engineer.

202.01.5 Loam Excavation. Loam excavation shall include loam or topsoil removed between the limits indicated and the depths specified on the Plans or directed by the Engineer. The excavated loam shall be stockpiled at approved locations within the right-of-way.

202.01.6 Unclassified Excavation. Unclassified excavation shall consist of the excavation, stockpiling and/or removal and legal disposal of a composite mixture of various types of materials which the Engineer has determined to be impractical to segregate into separate classifications.

202.01.7 Embankment Construction. Embankment construction shall consist of constructing roadway embankments, including preparation of the areas upon which they are to be placed; the benching of embankments; the construction of side slopes and toe drainage ditches; the construction of dikes within or outside the right-of-way; the placing and compacting of approved material within roadway areas where unsuitable material has been removed; and the placing and compacting of embankment material in holes, pits and other depressions within the roadway area. Only approved materials shall be used in the construction of embankments and backfills.

202.01.8 Wetland Soils and Plant Materials. Wetlands Soils are soils found in wetlands within the stream channel construction area and adjacent to roads which are to be removed as indicated on the plans. Wetland Plants are plants and roots found within the wetland soils generally within the top 12” of the soil surface, which are suitable for revegetating the restoration wetland area as determined by the Engineer.

202.02 MATERIALS.

202.02.1 Common Borrow. Common borrow shall consist of approved material required for the construction of embankments or for other portions of the work. Common Borrow shall be obtained from approved sources and shall meet the requirements of **Section M.01.01** of these Specifications prior to its final placement on the Project. The practice of

culling deleterious or out of specification material after placement and/or grading in-place will not be allowed.

202.02.2 Gravel Borrow. Gravel borrow shall meet the requirements of **Section M.01.09; Gradation of Aggregates, Table I, Column I** prior to its final placement on the Project. The practice of culling deleterious or out of specification material after placement and/or grading in-place will not be allowed.

202.02.3 Wetland Soil. Wetland soils shall consist of dark colored, organic, non-granular material removed from the top 18" of existing wetlands as described in this specification and delineated on site plans. The material shall be natural soil free of rubbish and other debris.

202.03 CONSTRUCTION METHODS.

202.03.1 Excavation-General. The Contractor shall remove all soil, rock, and other material and utilize or dispose of these materials as required by the Plans and these Specifications. The excavation for the roadway, intersections and entrances shall be finished to reasonably smooth and uniform surfaces. All rock cuts shall be thoroughly cleaned and scaled of all loose fragments. No materials shall be wasted without permission of the Engineer. Excavation operations shall be conducted so that material outside of the limits of slopes will not be disturbed. Prior to beginning excavation operations in any area, all necessary work in that area shall have been performed in accordance with **SECTION 201; SITE PREPARATION**, and all erosion and pollution controls shall have been installed in accordance with the applicable requirements of **SECTIONS 206 through 211** of these Specifications.

The Contractor shall maintain slopes, crowns, berms, and ditches on all excavations to insure satisfactory drainage at all times to protect the work, and maintain safe working conditions.

When the Contractor's excavating operations encounter remains or artifacts of potential historical or archaeological significance, the operations shall be temporarily discontinued. The Contractor will immediately contact the Engineer who will determine the disposition thereof. When directed by the Engineer, the Contractor shall excavate the site in such a manner as to preserve the artifacts encountered and shall remove them for delivery to the custody of the proper State authorities. Such excavation will be considered and paid for as Extra Work in accordance with Division 1 of these Specifications.

a. Excavation of Unsuitable Materials. Where unsuitable soils are encountered within the excavated section and above the design finish grade, excavation shall be suspended to allow area measurements and survey of elevations across the

exposed surface. Excavation of unsuitable soils shall then proceed until either a change of excavation classification occurs or until the excavation reaches a stable base or as otherwise directed by the Engineer. If a change in classification occurs, a second set of surveyed elevations shall be obtained. The Engineer shall determine the required transverse spacing and station intervals of survey points.

Where excavation to the designed subgrade elevation results in a subgrade or slopes of unsuitable soil, the Engineer shall require the Contractor to remove the unsuitable materials and backfill and compact to the designed subgrade elevation with approved material. The Contractor shall conduct his operations in such a way that the Engineer can take the necessary cross-sectional measurements before the backfill is placed.

Material designated as unsuitable shall be legally disposed of at no additional cost to the State.

Prior to placing of any subbase, base or pavement courses, all surplus excavated material including stumps, earth, rock, etc., shall be removed and the shoulders, ditches and slopes graded to approximate final lines.

b. Muck Excavation. If the unsuitable material involved is muck, the excavation will be accomplished without entrapping muck within the backfill. The backfilling of the excavation area shall proceed immediately behind the muck excavation so material that is displaced by the backfill can be removed. The excavation will be backfilled to the ground level or 3 feet above water level, whichever is higher, with rock or other suitable granular material selected from the roadway excavation. If suitable material is not available from the excavation, it will be obtained from other approved sources.

c. Haulage. Compensation for haulage of earthwork materials within the project limits shall not be paid for separately, but shall be deemed to be included in the contract unit prices for the respective items.

202.03.2 Embankment Construction-General. Embankment construction for roadways and associated ramps, dikes, and berms shall consist of the placement and compaction of suitable earth and rock excavation materials, or borrow material, as required. Construction of embankment may continue during cold weather, however, frozen soils shall be removed and shall not be permitted as fill for embankment. Rocks, broken concrete, or other solid materials shall not be placed in embankment areas where piling, guardrail, electrical poles, conduits, etc., are to be driven or placed.

a. Preparation of Foundation. After cleaning and removal of topsoil where necessary, the Contractor shall notify the Engineer and prepare the embankment foundation as follows:

1. Where embankment will be greater than 4 feet in height above existing ground, the Engineer shall determine whether preparation of the foundation will be necessary.

2. For embankment less than 4 feet in height above existing ground, completely break up the cleared ground surface to a minimum depth of 6 inches by plowing or scarifying. Compact the existing ground surface in accordance with **Subsection 202.03.3.**

3. Where unsuitable soils occur at existing ground surface, excavate and replace unsuitable soils with excavation or approved borrow material and compact in accordance with the applicable provisions of **Subsection 202.03.3.**

4. Where embankment is less than 2 feet in height above an existing road surface scarify or pulverize the existing roadway to a depth of 6 inches below the pavement surface. Reduce all particles to a maximum size of 6 inches and produce a uniform material. Compact the roadway surface in accordance with the applicable provisions of **Subsection 202.03.3.**

b. Roadway Embankment-Earth. Roadway embankments may consist of earth excavation, common borrow, gravel borrow, or a combination thereof. Unless the Department mandates the sequencing of materials in the embankment, borrow material shall not be placed until all suitable and accessible materials from all structure, trench, and roadway excavations have been placed. If the Contractor places more borrow than is required and thereby causes a waste of excavation, the amount of such waste will be deducted from the borrow volume as measured.

When borrow material is required to construct embankment, the Contractor shall make his own arrangements to procure the borrow or open a borrow source. The Contractor shall also determine the suitability of the borrow material for use in embankment by appropriate laboratory testing.

Roadway earth embankments shall be placed in horizontal layers not exceeding 12 inches (after compaction) and shall be compacted as specified in **Subsection 202.03.3** before the next layer is placed.

All earth embankment material shall be placed to the full width unless otherwise directed. The entire area of each layer shall be uniformly compacted to at least the required minimum density by use of compaction equipment consisting of rollers, compactors or a

combination thereof. Earth-moving and other equipment not specifically manufactured for compaction purposes shall not be considered as compaction equipment.

As the compaction of each layer progresses, continuous leveling and manipulating will be required to attain uniform density. Water shall be added or removed, if necessary, in order to obtain the required density. Construction equipment shall be routed uniformly over the entire surface of each layer.

If the natural-in-place moisture of the excavated material makes it impractical to compact the soil, the Contractor shall dry the soil by disking, harrowing, blading or other approved means. If these methods do not produce the specified compaction, the Contractor shall strip and replace the soil.

The embankment shall be crowned to shed runoff and constructed such that side slopes are protected from erosion.

c. Excess Materials. All excess or unsuitable excavated material, including rock and boulders, that cannot be used in embankments may be placed in a satisfactory manner on the side slopes of the nearest fill. In case it is impossible to dispose of all such material in the manner described above, the remainder shall be legally disposed of by the Contractor at no additional cost to the State.

d. Benching Existing Embankments. When embankment is to be placed and compacted against either an existing embankment or slope steeper than 4-to-1, horizontal benches shall be cut into the existing slopes to a sufficient width to accommodate placing and compaction operations and equipment. The Contractor shall bench the slope as each embankment layer is placed and compacted. Each bench shall begin at the intersection of the original ground and the vertical cut of the previous bench.

Benches may be cut to a maximum height of 3 feet. Embankment layers shall be placed and compacted in accordance with the applicable provisions of **Subsection 202.03.3**. There will be no separate payment for providing benches other than under the appropriate excavation classification.

e. Embankment Against Structures. If embankment can be deposited on one side only of abutments, wing walls, piers or culvert headwalls, care shall be taken that the area immediately adjacent to the structure is not compacted to the extent that it will cause overturning of or excessive pressure against the structure. When noted on the Plans, the fill adjacent to the abutment of a bridge shall not be placed higher than the bottom of the backwall of the abutment until the superstructure is in place. When embankment is to be placed on both sides of a concrete wall or box type structure, operations shall be so

conducted that the embankment is always at approximately the same elevation on both sides of the structure. In addition to these requirements, refer to **Subsection 203.03.5; Backfilling**, of these Specifications.

f. Wetlands Soils. The site of the proposed wetland restorations shall be excavated or filled to subgrade in accordance with these Specifications and as shown on the plans, and the area graded to the replication wetland subgrade elevations. Wetland Soil removed during this process shall be stockpiled for later use in accomplishing finish grade elevations as indicated on the construction drawings. Suitable erosion and sedimentation control as per the plans shall be placed around the replication wetland, and at the exit from the area, shall be installed to control the discharge of water draining into and from the replication wetland area.

Following approval by the Engineer of the replication area subgrade, stockpiled wetland soils obtained from the existing wetland surfaces shall be spread to the 12-inch depth specified on the plans over the prepared restoration area subgrade.

The existing wetland areas that are selected for securing wetland plant materials shall not be cleared or grubbed until the wetland tolerant plants have been identified and removed by excavation of the wetland soil to the replication area. The wetland soil removed shall consist of organic surface soils to a maximum depth of 18-inch but shall terminate at a depth where a mineral subsoil is encountered. Once removed, the Wetland Soils containing the wetland planting materials are to be distributed in the replication area to a 12-inch depth specified on the plans as soon as possible (and in all cases within 21 days) to prevent the soil from drying out and adversely affecting the viability of the wetland plants, seeds and root stocks contained in the soil.

202.03.3 Compaction-General. Each layer shall be uniformly compacted to the specified density before the next layer is placed. The specified density shall be obtained by utilizing any approved compaction equipment such as: pneumatic tired compaction equipment, or three wheeled power rollers, or vibratory, sheepsfoot, or tamping rollers, or other approved types of compaction equipment.

Dumping and rolling areas shall be kept separate, and no lift shall be covered by another until the compaction requirements of this Subsection have been met. Hauling and leveling equipment shall be routed and distributed over each layer of the fill so as to make best use of that compaction effort.

a. Densities.

1. Maximum density and optimum moisture content will be determined by AASHTO T180.

2. Field density of soil in place shall be determined by either AASHTO T191 or a nuclear moisture density gauge conforming to AASHTO T310.

3. The method of correcting for oversize particles in soil compaction test results, if necessary, will conform to AASHTO T224.

b. Compaction of Earth Embankment.

1. Subgrade. The resulting subgrade surface shall be compacted as required, to not less than 95 percent of maximum density, measured to a depth of 12 inches below the surface.

2. Embankment Sections. Earth in embankment sections below a plane of three feet below subgrade shall be compacted to not less than 90 percent of maximum density. The remainder of the roadway section up to subgrade shall be compacted to 95 percent of maximum density.

202.04 METHOD OF MEASUREMENT.

202.04.1 Excavation-General. The types of excavation specified in this Section will be measured on a volume basis as computed from the area in its original position. The volume will be determined by differencing the area to be excavated from its original position before excavation is begun to the design subgrade after excavation is completed. Differencing will be accomplished by taking cross sections at intervals stated herein by standard field survey techniques. Two sets of cross sections will be taken over the area to be excavated; one set of the area in its original position and a final set after completion of excavation. (Intermediate sets of cross sections may be authorized for progress payment purposes).

Should the final set of cross sections indicate unauthorized excavation below the design subgrade, the excess excavation shall not be measured for payment. However, the excess excavation shall be replaced by available suitable excavation or borrow material, all provided, placed and compacted at no cost to the State.

The final set of cross sections may include an amount for overbreakage or slides, as subsequently defined, which in the judgment of the Engineer were not caused by any carelessness on the part of the Contractor.

The cross sections will then be plotted and the volume determined by either the average end-area method or such other equivalent method acceptable to the Engineer.

a. Earth Excavation. Earth excavation shall be measured by the cubic yard as calculated by differencing the area excavated from its original position before earth excavation is begun to its position when:

1. There has occurred a change in classification of excavation; or

2. The design subgrade elevation has been reached; or

3. The approved limits of excavation of unsuitable soils below design subgrade elevation or behind design side slopes are reached; or

4. The approved limits of excavation of unsuitable soils under shallow embankment have been reached.

Area differencing shall be conducted by taking cross sections as described above in this **Subsection 202.04.1.**

202.04.2 Embankments. When the Contract specifically provides for payment for embankments, or when embankments are constructed with material obtained from sources other than excavation, embankment will be measured by the number of cubic yards of material actually placed and compacted within the limits of the design embankment section. The in-place volume will be calculated by differencing cross sections taken along the original ground from those taken along the top of the completed embankment. The two sets of cross sections will then be plotted and the volume determined by either the average end-area method or such other equivalent method approved by the Engineer.

All boulders and detached stones which have a volume in excess of 1 cubic yard and which the Contractor desires to incorporate into embankment construction must first be broken up into fragments whose respective volumes are 1 cubic yard or less. There will be no additional payment for breaking up such boulders and stones.

When the Contract does not specifically provide for payment for embankment, or when embankments are constructed with material obtained solely from excavation, the work of embankment construction will not be measured or paid for separately, but will be considered incidental to the various classifications of excavation.

However, when embankment is constructed from excavation material and there is required borrow material to complete the embankment, this borrow material shall be measured for payment.

Appurtenances, structures, pipes and drainage structures less than 50 cubic yards in volume shall not be deducted from embankment volumes for measurement of embankment or measurement of borrow for embankment.

202.04.3 Measurement of Borrow. Common Borrow, Gravel Borrow, or other borrow approved for use to replace unsuitable materials removed by excavation, or to construct embankment, shall be measured by the cubic yard as in-place and compacted. This volume shall be determined by area differencing using cross sections as described in **Subsection 202.04.1; Excavation-General.**

202.04.4 Measurement of On-site Wetland Fill. Salvaging, stockpiling and spreading Topsoil/Wetland Soil will be measured for payment by the cubic yard, complete and in place.

202.05 BASIS OF PAYMENT.

202.05.1 Excavation. The accepted quantities of "Earth Excavation," "Muck Excavation," "Channel Excavation - Earth," "Loam Excavation," and "Unclassified Excavation" will be paid for at their respective contract unit prices per cubic yard as listed in the Proposal. The prices so-stated constitute full and complete compensation for all labor, materials, and equipment, including excavation within the prescribed limits of the work, formation of embankments, grading, compaction, disposal of surplus materials, preparation of subgrade and shoulders, and all other incidentals required to finish the work, complete and accepted by the Engineer.

202.05.2 Borrow. If specifically called for in the Contract for embankment construction, or if approved for replacement of unsuitable soils in excavation or under shallow embankment, "Common Borrow" and/or "Gravel Borrow" will be paid for at their respective contract unit prices per cubic yard as listed in the Proposal. The prices so-stated constitute full and complete compensation for all fees, leases, permits, and equipment, labor, and operating costs associated with procuring, clearing, working, and restoring a borrow pit; all labor, materials, and equipment, hauling, formation of embankments, grading, compaction, disposal of surplus materials, preparation of subgrade and shoulders; and all other incidentals required to finish the work, complete and accepted by the Engineer.

202.04.4 On-site Wetland Fill. Salvaging, stockpiling and placement of Wetland soil will be paid for at the Contract unit price per square yard, which price shall include all labor, materials, equipment, and incidental costs required to complete the work.

Payment will be made under:

Item 202-1	Unclassified Excavation – Site 1 – Per Cubic Yard
Item 202-2	Gravel Borrow – Site 1 – Per Cubic Yard
Item 202-3	Unclassified Excavation – Site 3 – Per Cubic Yard
Item 202-4	Onsite Wetland Fill – Site 3 – Per Cubic Yard
Item 202-5	Gravel Borrow – Site 3 – Per Cubic Yard
Item 202-6	Unclassified Excavation – Site 14 – Per Cubic Yard
Item 202-7	Gravel Borrow – Site 14 – Per Cubic Yard
Item 202-8	Unclassified Excavation – Site 15 – Per Cubic Yard

END OF SECTION

This page intentionally left blank

SECTION 212

MAINTENANCE AND CLEANING OF EROSION AND POLLUTION CONTROLS

212.01 DESCRIPTION. This work consists of the maintenance and cleaning of erosion and pollution control facilities in accordance with these Specifications and as directed by the Engineer.

212.01.1 Applicable Controls. The specific erosion and pollution control facilities to be cleaned and maintained under this Section consist of the following:

a. Perimeter Controls.

1. Baled Hay Erosion Checks;	Subsection 206.01.1
2. Silt Fence;	Subsection 206.01.2
3. Compost filter sock	Subsection 206.01.4

b. Check Dams.

1. Baled Hay Ditch and Swale Erosion Checks;	Subsection 207.01.1
2. Log and Hay Check Dams;	Subsection 207.01.2
3. Sand Bag Erosion Dikes;	Subsection 207.01.3
4. Compost Filter Sock Ditch and Swale Erosion Checks;	Subsection 207.01.5

c. Temporary Dewatering Basins.

1. Dewatering Basins;	Subsection 208.01.1
2. Filter Fabric Retention Basins;	Subsection 208.01.2

d. Storm Drain Protection.

1. Sandbag Gutter Inlet Sediment Barrier;	Subsection 209.01.1

2. Silt Fence Catch Basin Inlet Protection; Subsection 209.01.2

3. Baled Hay Catch Basin Inlet Protection; Subsection 209.01.3

e. Stilling Basins. Subsection 210.01

212.01.2 Definitions.

a. Cleaning. Cleaning consists of removing debris and accumulated sediment-laden deposits from the upstream side of perimeter controls, check dams and temporary drainage protection **and** from the bottom of temporary dewatering basins and stilling basins. All material so-removed shall be legally disposed of.

b. Maintenance. Maintenance consists of the restoration and repair of damage sustained by erosion and pollution controls from "normal" rainfall events. (Abnormal weather events are defined in **Subsection 212.03.4; Failure of Erosion an Pollution Controls**).

212.02 MATERIALS. Materials required to repair and restore damaged erosion and pollution controls shall meet the applicable requirements of **Subsections 206.02; 207.02; 208.02; 209.02; and 210.02; for Perimeter Erosion Controls, Check Dams, Temporary Dewatering Basins, Storm Drain Protection, and Stilling Basins**, respectively, of these Specifications.

212.03 CONSTRUCTION METHODS. Erosion and pollution controls shall be maintained by the Contractor to the satisfaction of the Engineer. Erosion and pollution controls must be able to prevent, under normal weather conditions, both the movement of soil materials and the intrusion of sediment-laden discharges into environmentally sensitive areas.

Construction shall not commence or continue until all specified erosion and pollution controls are in place, properly installed and accepted by the Engineer.

Erosion and pollution controls shall be routinely inspected by the Engineer. The Engineer shall immediately notify and direct the Contractor to take corrective action and make all necessary repairs whenever maintenance of the erosion and pollution controls is required. The Contractor shall commence with the requisite cleaning and maintenance measures no later than the next consecutive calendar day after receiving such a directive

from the Engineer, and shall aggressively and expeditiously perform such cleaning and maintenance work until the original problem is remedied to the complete satisfaction of the

Engineer. In the event of a holiday or weekend storm event, the Contractor must have resources available to restore and, if necessary, to replace any damaged erosion controls.

212.03.1 Threshold for Cleaning Erosion Controls. Erosion and pollution controls will be cleaned when directed by the Engineer; after a rainstorm; and when sediment deposits reach the heights indicated in the following table:

a. Perimeter Controls	**Height**
1. Baled Hay Erosion Checks	½ Bale Height
2. Silt Fence	6 inches
3. Compost Filter Sock	½ compost filter sock height
b. Check Dams	
1. Baled Hay Erosion Checks	½ Bale Height
2. Log and Hay Check Dams	½ Bale Height
3. Sand Bag Erosion Dike	½ Dike Height
4. Stone Check Dam	½ Dam Height
5. Compost Filter Sock	½ compost filter sock height
c. Temporary Dewatering Basins	
1. Dewatering Basins	½ Original Basin Height
2. Filter Fabric Retention Basin	½ Original Basin Height
d. Storm Drain Protection	
1. Sandbag Gutter Inlet Sediment Barrier	½ Dike Height

2. Silt Fence Catch Basin Inlet Protection	6 inches
3. Baled Hay Catch Basin Inlet Protection	½ Bale Height
e. Stilling Basins	½ Depth Below Outlet Elevation

212.03.2 Other Requirements.

a. Perimeter Controls, Check Dams and Storm Drain Protection. The following requirements apply:

1. Damaged controls will be repaired or replaced after each storm events or as directed by the Engineer.

2. Before controls are removed all accumulated sediment on the upstream side shall be removed and legally disposed of.

3. Erosion controls shall not be removed until the adjacent exposed areas are relatively free from future uncontrolled discharges.

4. The Engineer has the authority to verify, enforce, and to specify maintenance activities and to ensure that erosion and pollution controls have been properly maintained.

b. Temporary Dewatering Basins and Stilling Basins. The following requirements apply:

1. The basins will be periodically inspected for signs of erosion around the basin and downslope area.

2. Repairs will be promptly carried out as directed by the Engineer.

3. The Engineer has the authority to verify, enforce, and to specify maintenance activities and to ensure that controls have been properly maintained.

212.03.3 Failure to Maintain Erosion and Pollution Controls. If the Engineer decides on any given day that those erosion and pollution controls specified in the Contract are not in

place or have not been adequately maintained as specified in this Section, the daily charge set forth in the Contract Documents will be deducted from monies due the Contractor as a charge for failure to comply with this Specification. Moreover, the stated daily charge will continue each consecutive calendar day thereafter until the deficiencies noted have been corrected to the complete satisfaction of the Engineer.

212.03.4 Failure of Erosion and Pollution Controls. This **SECTION 212; MAINTENANCE AND CLEANING OF EROSION AND POLLUTION CONTROLS**, is based on the concept that erosion and pollution controls will essentially remain intact under normal rainfall events and that any damage sustained by said controls under normal rainfall may be repaired under the maintenance provisions set forth herein.

However, under abnormal weather events it is possible that erosion and pollution controls may be damaged to the extent that the Engineer may direct that they be replaced in their entirety. Under such abnormal conditions the Contractor will replace the particular facilities, and be compensated for same, under the applicable provisions of **SECTIONS 206, 207, 208, 209 and 210; PERIMETER CONTROLS, CHECK DAMS, TEMPORARY DEWATERING BASINS, STORM DRAIN PROTECTION, and STILLING BASINS,** respectively, of these Specifications.

a. Abnormal Weather Conditions. For the purposes of this **Subsection 212.03.4**, abnormal weather events are defined as follows:

1. For a duration of 1 hour; rainfall equal to or greater than ½-inch.

2. For a duration of 12 hours; rainfall equal to or greater than 2 inches.

3. For a duration of 24 hours; rainfall equal to or greater than 3 inches.

4. Extreme weather conditions such as hurricanes, tornadoes, floods, blizzards, etc.

Daily rainfall records may be obtained from the National Weather Service.

212.04 METHOD OF MEASUREMENT. “Maintenance and Cleaning of Erosion and Pollution Controls” as specified in this Section will not be measured by a single unit of measurement usually associated with a specific Proposal item. Rather, this work will be documented and paid for on a Force Account basis as set forth in **Subsection 212.05**.

212.05 BASIS OF PAYMENT. The “Maintenance and Cleaning of Erosion and Pollution Controls” will be paid for on an Allowance basis as set forth in these Specifications.

The estimated total amount established and indicated for this item in the Schedule of Prices in the Proposal is the amount from which said Allowance payments will be drawn.

Payment will be made under:

Item 212-1 Cleaning & Maintenance of Erosion Controls – *$10,000.00* Allowance

Item 212-2 Cleaning & Maintenance of Erosion Controls – *$10,000.00* Allowance

END OF SECTION

SECTION 701.9901

INSTALLATION AND INSPECTION OF WATER FACILITIES – WARWICK WATER DEPARTMENT

DESCRIPTION: The work covered under this Section consists of performing all operations in connection with the furnishing and installing of water mains, water gate boxes and adjusting water gate boxes and all other specified items and connections shown on the plans and details and listed in the proposal.

The work shall include all fittings and specials required for the installation of the work, including connections to existing facilities and temporary connections where necessary to maintain service.

All work herein described and/or shown on the plans and listed in the proposal but not specifically mentioned in these Specifications shall be performed by the Contractor, in accordance with the requirements of the Warwick Water Department and the best recognized practices for water main installation. The Warwick Water Department will hereinafter be referred to as the Owner.

All lines shown on the plans and cross sections are approximate. Deviations from the proposed alignment will be allowed depending on actual location in the field of other utilities, obstructions and existing services. Any adjustment that results in a pipe cover less than the minimum required or as shown on the plans shall only be allowed if permission is granted from the Engineer.

The Owner, through its authorized agents, require an Inspector from the Water Department to be present on site whenever the Contractor is working on, under, around or in close proximity to their infrastructure. Overtime is defined as any hours outside the normal working hours of the Water Department of 7:00 am to 3:30 pm. If overtime work for Inspectors is required the Water Department shall be reimbursed under the appropriate Allowance as defined in Division 0 of the Contract Documents. Existing mains shall be tapped, where necessary, by the Contractor under the immediate supervision of Water Department personnel. At least four (4) working days' notice shall be given to the Water Department Office before the Contractor taps the main. Main taps are not permitted on Fridays or after 1:30 P.M. on any day. Water service must be maintained to all existing customers throughout construction.

Sheeting, bracing, excavation, pumping, bailing, dewatering and backfilling shall be accomplished in accordance with the project Specifications as well as applicable provisions

of the Rhode Island Standard Specifications for Road and Bridge Construction and the Owner's specifications.

Water connections and shut-downs shall be performed only as ordered by the Owner and the Engineer.

The Culvert crossing shall be completed in conjunction with water main installation and in accordance with Special Provisions 701.9903 – Water Line Support Assemblies and 701.9902 – Preinsulated Piping System.

MATERIALS: The selection of materials and supplies shall conform to those adopted by the Owner. The contractor shall familiarized himself with Owner's requirements when the occasion or choice of materials so demands.

All materials proposed to be used must be submitted for review and approval by the Warwick Water Department.

Storage and Handling

a. The Contractor shall be responsible for the safe storage of materials on the site and prevent damage before, during and after the installation and to protect the installed work and materials of all other trades.

b. The interior of all pipe, fittings, and other accessories shall be kept free from dirt and foreign matter at all times. Valves shall be drained and stored in a manner that will protect them from damage by freezing.

c. Pipe, valves and fittings shall be handled by methods that avoid shock or damage and damage to the lining or coating. Under no circumstances shall such materials be dropped. Repairs, if allowed by the Engineer, shall be made at the Contractor's expense in a manner approved by the Engineer and Owner.

Pipe – Ductile Iron

a. Ductile iron pipe shall be cement mortar lined and seal coated in accordance with ANSI Designation A21.4 and AWWA Designation C104, both with latest revisions except for Section 4-8 "thickness of lining" where Section 4-8-2 double thickness shall govern. All ductile iron pipe shall conform to the requirements of ANSI Designation A21.51 and AWWA Designation C151 both with latest revisions for the class designated on the drawings.

Pipe Fittings and Specials

Fittings shall be ductile-iron and conform to requirements of AWWA C110-71, latest edition, minimum Class 250, and as specified herein; except as otherwise indicated, specified and/or directed pipe fittings and specials shall have mechanical type joints conforming to AWWA Specification C111-64. Bituminous coating on exterior surfaces and cement-mortar lining on interior surfaces of pipe fittings and specials shall have cast upon them the class and the initials of the manufacturer. Exterior of pipe fittings shall be factory-coated with approved bituminous coating and interior of all fittings shall be cement-mortar lined in accordance with AWWA Specification C104-64 except thickness of mortar lining shall be not less than 1/8 inch.

Gate Valves and Tapping Valves

Gate valves and tapping valves shall be New York Metropolitan Pattern, or equal approved by the City, iron body, bronze-mounted, double disc, parallel seat, mechanical joint, wrench-operated, non-rising stem with 2”x 2” operating nut and “O” ring seal. Valves shall be open left and this will cast on the body. Tapping valves shall be of equal manufacturer as that of the tapping sleeve.

Tapping Sleeves

A. The Tapping Sleeves shall be single band stainless steel (304 grade) tapping sleeve with test plug, flanged on the vertical centerline. The entire surface area of each flange shall be machined. The sleeve flanges shall be fitted with combined lead and rubber gaskets, each gasket shall cover the entire surface area of each flange. The combined lead and rubber gaskets shall provide a water tight joint for the full length of the sleeve. The bolts used to assemble the sleeves shall pass directly through each gasket. They shall be closely spaced to insure uniform gasket pressure and compression. Sleeves shall be provided with a raised head at the base of each hub to aid in centering the sleeve on the pipe and to provide a stop for caulking.

B. Sleeve outlets shall have counterbored flanges to insure centering the Tapping Valve.

C. All materials shall be in accordance with that called for in AWWA Specification C500, and the MSS-SP-60 Detail. The flange of the sleeve shall be faced and drilled to A.S.A. B16.1 Class 125 Specifications and shall be delivered with all necessary bolts and gaskets.

D. Note: Square Seal, T-28, or similar sleeves incorporating a compression type O-ring seal will not be acceptable.

Valve Boxes

Valve (Road) boxes shall be provided for each underground gate valve. Valve boxes shall be heavy pattern cast-iron, cast in two telescoping sections, of sliding construction and of such lengths as will provide, without extension, the required cover. The lower section shall be at least 5-1/4 inches inside diameter, belled or domed at the bottom to fit over the work. The upper section shall fit over the lower section and shall be flanged at its base to provide proper bearing. Covers shall be at least 6 inches in diameter, shall fit flush with the top, and shall have the work "WATER" cast thereon in raised letters. Valve boxes shall be of good quality, cast-iron, free from all defects in material and workmanship, and shall be coated with coal-tar pitch enamel or other approved coating. Valve boxes shall be "Buffalo" type suitable for the size valve on which they are used and shall be as manufactured by Buffalo Pipe and Foundry, or an approval equal.

Pipe Bedding

Pipe bedding shall conform to the requirements of Section 701.03.3 of the Rhode Island Standard Specifications for Road and Bridge Construction, Latest Edition with the latest revisions.

Joint Packing and Filler

Joint packing for poured and caulked lead joints shall be made of braided asbestos or as approved. Lead filler for poured and caulked lead joints shall be virgin pig or ingot lead conforming to the requirements of Federal Specification QQ-1-156, Type 1.

Joint Materials

Gaskets for push-on joints and mechanical joint pipe shall be rubber, suitable for water service in accordance with AWWA C-111.

Dresser Style Transition Coupling

A. The sleeve of the transition coupling shall be Gray Iron per ASTM A-48.

B. Flanges of the Transition Coupling shall be either Ductile Iron per ASTM A-536 or Malleable Iron per ASTM A-47.

C. Gaskets shall be specifically compounded new rubber polymer for superior shelf life and resistance to permanent set. Recommended for potable water use.

D. All bolts shall be stainless steel of an approved design meeting the approval of the Engineer.

Filter Stone

Where ¾ inch Filter Stone is required by the plans or directed by the Engineer, the materials shall conform to Section M - M.01.07 Filter Stone, of these Specifications.

Backfill Gravel

Where ordered by the Engineer, gravel meeting the following specifications shall be used for backfill:

a. Gravel shall consist of natural bank gravel having durable particles graded from fine to coarse in a reasonable uniform combination with no boulders or stones larger than 2 inches in size. It shall be free from slag, cinders, ashes, refuse or other deleterious materials.

b. Gravel shall meet the following gradation:

Sieve Size	Percent Passing
2”	100
No. 100	3-20
No. 200	0-15

Liquid Chlorine

Liquid Chlorine shall conform to AMNA Standard B301, current edition.

Hypochlorite

Hypochlorite shall conform to AMNA Standard B300, current edition.

Concrete for Thrust Blocks

Concrete for thrust blocks shall be Class B (AE) having a compressive strength at the end of 28 days of not less than 3,000 psi and shall conform to the requirements of Section 601 of these Specifications.

Other Materials

All other materials, not specifically described but required for proper and complete installation of the water distribution system shall be subject to the approval of the Owner.

CONSTRUCTION METHODS:

GENERAL REQUIREMENTS

Piping for water mains, water services and appurtenances shall be of the types and materials specified herein. The pipe, fittings, specials, accessories and appurtenances shall be new and unused, and as approved. The interior of the pipe shall be thoroughly cleaned of all foreign matter before being lowered into the trench, and shall be kept clean during laying operations by plugging or other approved method. The full length of each section of piping shall rest solidly upon the pipe bed, with recesses excavated to accommodate bells and joints. Any pipe that has the grade or joint disturbed after laying shall be taken up and relaid. Pipe shall not be laid in water, or when trench or weather conditions, are unsuitable for the work, except by permission of the Owner. Water shall be kept out of the trench until the joints have been completed. Any section of pipe found to be defective before or after laying shall be replaced by the Contractor with sound pipe without additional expense to the Owner. All bends, tees and other locations indicated or directed shall be firmly reinforced with concrete thrust blocks of the size and shape indicated and as directed, and strapped where required, to prevent the pipe, pipe fittings and appurtenances from being blown off the lines under pressure. Size of thrust blocks shall be determined as shown on the plans or as directed by the Owner. Thrust blocks shall also be placed at all plugged or capped ends of pipes. Where connections are made between new and existing work, the connections shall be made using the specials and fittings specified, as indicated or as required. All connections between new work and existing work shall only be made at such times and in a manner approved by the Owner. Approximate locations of connections between new and existing work are shown on the plans, the exact locations shall be as directed by the Owner. The Contractor shall make the necessary excavations as directed to uncover existing work for the purpose of determining the exact locations for all connections of new work to existing work.

Sequence of Construction of Water Main Installation

In order to minimize disruption of service to customers the following sequence of construction shall be performed for the installation of the new water main:

1. All pipes, tees, water gate vales and culvert crossing support assemblies shall be installed as shown on the plans or as directed by the Owner. During the installation of these items, the existing water main shall remain in service.

2. The new water main shall be charged by using tapping sleeves and valves at each end of the new water main, as indicated on the plans. The new water main shall be tested and disinfected as required. The existing and new water main will be charged simultaneously.

Any deviation to the above described sequence of construction must be coordinated with and agreed upon by the Owner.

Installation

Pipe, fittings, specials, and accessories shall be handled in such a manner as to ensure delivery to the trench in sound, undamaged condition. Particular care shall be taken not to injure the pipe coating or lining and in the case of such damage the coating or lining shall be repaired by the Contractor in an approved manner. No other pipe or material of any kind shall be placed inside of a pipe valve fitting or appurtenance. Proper handling, storing and installation of the pipe and appurtenances shall be used.

Under no circumstances shall water main materials be dropped or dumped into trench. The Contractor shall be responsible for the safe storage of all water main materials and shall allow the Owner to inspect all pipe or accessories as the Owner may require.

Cutting of pipe shall be done in a neat and workmanlike manner without damage to the pipe or lining and so as to leave a smooth end at right angles to the axis of the pipe. Unless otherwise authorized by the Owner, cutting shall be done by means of an approved type of mechanical cutter. Before installation, the Contractor shall carefully inspect all pipe, fittings, specials and accessories for defects and no materials shall be installed which are known to be defective in any way. All piping materials found to be defective before or after installation will be rejected and shall be replaced by the Contractor with new, sound and approved material, at no additional expense to the Owner. Piping, fittings, specials and associated work shall be provided as indicated, as specified and as necessary to conform to the lines, grades and arrangement as indicated and for the proper and satisfactory fitting and completion of the work, as necessary to conform to new and existing work, and as directed. The Contractor shall be responsible for certifying in the field all lines, grades, dimensions and conditions affecting the work, and for the correct fitting of all parts of the water mains and appurtenances in the completed pipelines prior to the ordering or fabrication as required by vertical curves, horizontal curves or offsets which shall be made using fittings or specials as indicated and/or as directed; the types of fittings or specials

used shall be as approved. Unless otherwise directed and except where necessary in making connections with other pipelines, pipes shall be laid with the bells facing in the direction of laying. Pipe bedding and fill shall be placed and tampered alongside each pipe as pipe laying progresses. No joints shall be covered in any way until the joints have been inspected and approved by the Owner.

Mechanical joint fittings shall be the correct size for the pipe on which used and all necessary adapters and wedges shall be provided by the Contractor. Glands shall be properly centered and placed to insure correct spacing between each gland and flange face. Bolts shall be inserted and evenly tightened by hand to insure proper spacing around the socket. A wrench shall be used to complete tightening of the bolts, care being taken to tighten opposite bolts. If necessary, a torque wrench shall be used to obtain the maximum allowable bolt torque as recommended by the manufacturer.

The Contractor shall provide underground gate valves and valves boxes where shown and/or where directed and set plumb. Center valve boxes on the gate valve and the valve boxes shall not transmit shock or stress to the valves; tamp earth fill carefully around each valve box to the undisturbed trench face; the box cover shall finish flush with the surface of the pavement or such other level as directed. All valves shall have interiors cleaned of all foreign matter before installation and the valves shall be inspected in open and closed positions to insure that all parts are in approved working condition and properly adjusted. Unless otherwise indicated or directed, all joints of gate valves to piping shall be made using mechanical joints in the matter specified.

The work of installing the tapping sleeve and valve and for making the wet taps under full main pressure shall be done only by workmen who shall be thoroughly experienced in this type of work. Existing water mains where wet tap connections are made shall be kept in service at all times when making the connections. The Contractor shall furnish the necessary services of factory-trained personnel and special factory equipment for making wet tap connections, at no additional expense to the Owner. Joints between tapping sleeves and existing mains shall be made using poured and caulked lead joints; outlet connection of valve to piping shall be mechanical joint. Just prior to the installation of the tapping sleeve, the existing main shall be thoroughly cleaned of all dirt, rust, scale or other materials. Machine sleeves shall be installed in such a manner as to bring the tapping connections exactly at right angles to the centerline of the pipe to be tapped. The wet tap connections shall be made in accordance with additional requirements of the manufacturer of the pipe, sleeves and valves and as approved.

Alignment and Grade

The water main shall be laid and maintained to the required lines and grades with fittings and valves at the required locations; spigots centered in bells; and all valves and hydrant stems plumb.

The lines may vary from the lines indicated on the plans to avoid existing obstructions with approval by the Engineer. Variations in the lines shall be accomplished by transitioning the pipe. Bends shall not be used to accomplish required lines.

The grade shall be determined by the minimum depth hereinafter specified except as shown on the plans or where obstructions exist and approval for less cover is given by the Owner.

Deviations Occasioned by Other Structures

Wherever obstructions not shown on the plans are encounter during the progress of the work and interfere to such an extent that an alteration in the plan is required, the Engineer shall have the authority to change the plans and order a deviation from the line and grade or arrange with the owner of the structures for the removal, relocation or reconstruction of the obstructions.

Subsurface Explorations

Whenever, in the opinion of the Engineer, it is necessary to explore and excavate to determine the location of existing underground structures, the Contractor shall make explorations and excavations for such purposes.

Depth of Pipe

All pipe shall be laid to provide a minimum cover of 4.5 feet from the top of the pipe barrel to the finish grade when possible except as shown on the plans.

Excavation

The trench shall be dug so that the pipe can be laid to the alignment and depth required, and it shall be excavated only so far in advance of pipe-laying as pipe can be installed on the same day. The trench shall be so braced and drained that the workmen may work therein safely and efficiently. It is essential that the discharge of the trench dewatering pumps be conducted to natural drainage channels, drains or sewers.

Care will be taken in making in the excavation to avoid damage to other utilities, structures, or Owner’s service connections.

Such other utilities, obstructions, service connections, structures, etc. shall be located in the field as described under Special Conditions prior to making excavations.

Width of Trench

The width of the trench shall be ample to permit the pipe to be laid and jointed properly, and the backfill to be placed and compacted as specified. Trenches shall be of such extra width, when required, as will permit the convenient placing of timber supports, sheeting and bracing, and handling of specials.

Pipe Clearance in Rocks

Ledge rock, boulders and large stones shall be removed to provide a clearance of at least 12 inches below and on each side of all pipe, valves and fittings.

Excavation of Grade

The trench shall be excavated to the depth required so as to provide a uniform and continuous bearing and support for the pipe on solid and undisturbed ground at every point between bell holes, except that it will be permissible to disturb and otherwise damage the finished surface over a maximum length of 18 inches near the middle of each length of pipe by the withdrawal of pipe slings or other lifting tackle. Any part of the bottom of the trench excavated below the specified grade shall be corrected with approved material, thoroughly compacted as directed by the Engineer. The finished subgrade shall be prepared accurately by means of hand tools.

Excavation in Poor Soil or Rock and Refilling to Grade

Where the bottom of the trench at subgrade is found to be unstable or to include ashes, cinders, any type of refuse, vegetable or other organic materials, or large pieces or fragments in inorganic material which in the judgment of the Engineer should be removed or where excavation is made in rock or boulders and the specified clearance is provided, the Contractor shall excavate and remove such unsuitable material to the width and depth ordered by the engineer. Before the pipe is laid, the subgrade shall be made by backfilling with an approved material in 3 inch layers. The layers shall be thoroughly compacted as directed.

Excavated Material

All surface materials which, in the opinion of the Engineer, are suitable for re-use in restoring the surface shall be kept separate from the general excavation material, as directed by the Engineer.

All excavated material shall be piled in a manner that will not endanger the work and that will avoid obstructing sidewalks and driveways. Hydrants under pressure, valve pit covers,

valve boxes, curb stop boxes, fire and police call boxes, or other utility controls shall be left unobstructed and accessible until the work is completed.

Gutters shall be kept clear or other satisfactory provisions made for street drainage, and natural watercourses shall not be obstructed.

Trenching by Hand

Hand methods for excavation shall be employed in locations where interfering structures, utilities, or Owner's services are indicated on the plans or by consultation with representatives of other utilities.

Bedding and Backfilling

Bedding shall be placed and compacted to the depth shown on the plans. The bedding material shall be preshaped to a depth equal to the thickness of the pipewall. Bedding pipes on blocks will not be permitted. Recesses shall be excavated for bell and spigot pipe to prevent any loading on the bell. The pipe shall be placed on said previously compacted pre-shaped bedding material.

All trench backfilling shall be done in the following manner:

a.) Additional bedding material shall be deposited uniformly on both sides of the pipe for the entire width of the trench to a depth not higher than the springing line of the pipe. The material shall be deposited directly on the previously placed and compacted bedding material in layers not exceeding six (6) inches in loose depth. Each six (6) inch layer shall be uniformly compacted by tamping under and on each side of the pipe to provide uniformly solid bearing along the full length of the pipe.

b.) Above the springline and to a depth of not less than twelve (12) inches over the crown of the pipe, the selective borrow material shall be placed in layers not exceeding nine (9) inches in depth. Each nine (9) inch layer shall be hand or mechanically tamped and consolidated to a density equal to ninety (90) percent of maximum compaction as determined in accordance with Method A or D of AASHTO Test Designation: T 1980 74.

c.) From a point twelve (12) inches over the crown of the pipe to the existing ground level, in non-roadway areas and to within 14" of the surrounding grade in paved roadway areas, the upper sections of the trenches shall be backfilled with material consisting of sound tough durable particles of crushed or uncrushed gravel, sand or native material free or soft elongated pieces, vegetable matter or

other deleterious substances having no stone larger than eight (8) inches in size. This material shall be placed in layers not exceeding twelve (12) inches in depth and shall be mechanically consolidated to a degree of compaction equal to the adjoining trench walls and capable of sustaining vehicle traffic immediately upon completion. The mechanical compaction of the upper twelve (12) inch layers shall be affected by at least four (4) passes of an approved type of mechanical tamper, each pass of equipment shall cover the entire area of the back-fill surface. Moisture content of backfill materials shall be proper at all times to produce the optimum density, and puddling of the backfill will be permitted only with the express consent of the Engineer.

d.) All surplus or excess materials shall be promptly removed from the site and disposed of by the Contractor.

Sheeting and Bracing

The Contractor shall furnish, put in place, and maintain such sheeting, and bracing, as required to support the sides of the excavation, or to diminish the width of excavation needed, or to properly support adjacent structures. If the Engineer is of the opinion that, at any point, sufficient or proper supports have not been provided, he may order additional supports or bracing installed at the expense of the Contractor which shall not in any way release the Contractor from his responsibility for the sufficiency of such supports.

Permanent Blocking

Permanent blocking will not be permitted. Where temporary blocking is permitted, it shall be removed and the underside of the pipe or fittings shall be completely filled with thoroughly compacted bedding material before backfilling. Fittings shall be carefully set in line, plumb and true to grade and thoroughly compacted to a firm and uniform bearing.

Miscellaneous Metalwork

Fittings and other appurtenances shall be strapped and clamped where indicated and/or as directed. Steel bars, rods and plates shall be of structured steel. Straps, bridle rods, clamps and such other parts shall be provided to the details as directed and as approved and in general the strapping and clamping shall be in accordance with National Fire Protection Association pamphlet No. 24. After installation all parts of the strapping and clamping shall be given two heavy coats of an approved coat-tar base protective coating.

PRESSURE TESTING AND CHLORINATION PROCEDURE

The following procedures shall be strictly adhered to after the installation of water mains, services or as directed by the Owner.

Flushing, Filling, Testing of Water Mains

A. The Contractor shall utilize a by-pass piping system for flushing, filling, testing and chlorination of various sized water mains. The by-pass piping shall consist of corporation stops or valves on the supply line and the main to be filled. Two (2) or more check valves shall be installed in the by-pass pipe to insure that no water is allowed to return to the supply line.

B. Line valves SHALL NOT be utilized to fill, flush, test or chlorinate water mains.

C. Mains shall be pressure tested to 1.5 times system working pressure, and shall be required to hold for at least two (2) hours.

D. Water mains and services shall be thoroughly flushed. A turbidity reading of below five (5) shall be monitored by the Owner's chemist before flushing is discontinued and chlorination may begin. Flushing shall be at a rate sufficient to create a water velocity of at least 2.5 feet per second through the pipe.

Chlorination of Water Mains and Services

All mains and appurtenances shall be chlorinated in accordance with provisions of the American Water Works Association Standard 0601-81 or latest revisions therefore, and as follows:

A. A corporation stop shall be provided at a location for feeding of the liquid chlorine solution, and at locations designated by the Owner for sampling points. Copper tubing shall be used for all chlorination and sampling pipe. Chlorine shall be fed in a liquid solution, made from crystalline sodium hypochlorite.

B. The initial chlorine concentration in the pipe shall be at least 25 mg/L when tested by the Owner. The treated water will remain in the water main for at least twenty-four (24) hours. After the twenty-four hour retention period the chlorine concentration in the pipe shall be no less than 10 mg/L when tested by the Owner. If, after the applicable retention period, the chlorine concentration is at least 10 mg/L the heavily chlorinated water shall be flushed from the main until the chlorine concentration in the water leaving the main when tested is no higher than 1 mg/L and the turbidity is less than 1.0. If the chlorine concentration when tested is less than 10 mg/L, Step (b) shall be repeated.

C. Bacteriological testing shall be done by the Owners chemist after the final flushing and before the water main is put into service. The sample or samples

shall be collected immediately after final flushing and again, if necessary, at least twenty-four (24) hours after final flushing. These samples usually require a forty-eight (48) hour period to insure that no coliform organisms exist. If the testing is positive, the procedure shall be repeated. No water main shall be put into service without the permission of the Warwick Water Department.

D. Under certain conditions emergency type chlorination may be conducted with the approval of the Owner's Supervisor.

E. Chlorination of valves, fittings and short lengths of main shall be thoroughly disinfected by contact swabbing and/or brushing with a high strength sodium or calcium hypochlorite solution in the concentration of 500 milligrams of available chlorine per liter of water.

F. Permission after Compliance:

The Owner's chemist will send Certificate of Compliance to Public Works director.

Public Works Director will advise the Owners Supervisor to turn on water.

DO NOT turn water on without permission from the Owners Supervisor.

Functional Test

A functional test of all operating parts and components of the water system shall be performed in the presence of representatives of the Warwick Water Department and local fire departments to insure that the system conforms to all necessary requirements. All deficiencies indicated during this test will be corrected and a new test rescheduled if required.

Owners Requirements

All other required data not specified herein shall be strictly in accordance with the standard of the Warwick Water Department and these Specifications.

GUARANTEE AND QUALITY ASSURANCE:

If any damage to the existing utilities to remain occurs due to the Contractor's operations, it shall be repaired or replaced by the Contractor to the satisfaction of the Engineer at the Contractor's sole expense.

The Contractor shall provide at least one person who shall be thoroughly trained and experienced in the skills required, who shall be completely familiar with the design and application of work described in this special provision and who shall be present at all times during progress of the work of this special provision and shall direct all work performed under this special provision.

For actual installation of all waterworks, the Contractor shall use only personnel who are thoroughly trained and experienced in the skills required.

The Contractor shall guarantee and be responsible for the workmanship and materials for the period of the contract – that is, until the completion of all work required by the contract and established by the date of acceptance by the Owner.

If the Contractor is furnished a warranty at the time of purchase of any product or materials and the warranty has not expired at the time of acceptance of the work by the Owner, the warranty shall then be turned over to the Owner.

Upon final acceptance by the Owner, all pipe, fittings, hydrants, valves, services and appurtenances shall become the sole property of the Owner. The Owner shall be responsible for future maintenance except that the Contractor shall repair any and all defects in the original installation for a period of one (1) year following the date of acceptance.

MEASUREMENT AND PAYMENT:

Water mains including thrust blocks, strapping, tying and couplings shall be measured along the centerline of the waterline excluding all fittings and valves. The quantity to be paid under the bid items to furnish and install waterline shall be the number of linear feet of the various sizes of pipe including excavation, bedding and backfill measured along the centerline of the waterline excluding fittings and valves complete and accepted.

Water service connections, tapping valves and sleeves, transition couplings, gate valves and boxes, thrust blocks and adjusting water gate box to grade and furnish and install water gate box, furnish and install cast iron or ductile iron fittings,

pressure testing and chlorination of water mains shall be measured and paid separately under the various bid items in the proposal complete in place and accepted.

The prices and payment shall constitute full compensation for furnishing and installing all water facilities listed under the unit bid prices in the Proposal and as specified in these Specifications, and the work shall include all other necessary materials, jointing, strapping and tying, painting, labor, equipment, tools, pressure and leakage tests, thrust blocks, sheeting and bracing and incidentals necessary to complete the items, including connections to existing facilities and temporary connections where necessary to maintain service, excavation and backfill, Class B bedding, filter stone, backfill gravel, pumping, bailing and dewatering, testing, disinfection and chlorination, complete and accepted.

Payment will be made under:

Item 701-1 Installation and Inspection of Water Facilities – Warwick Water Department – Per Lump Sum

Item 701-2 Installation and Inspection of Water Facilities – Warwick Water Department – Overtime Work - *$4,000.00* Allowance

END OF SECTION

SECTION 920

RIPRAP

920.01 DESCRIPTION. This work consists of providing placed riprap on prepared surfaces of the sizes and layer thicknesses at the locations indicated on the Plans or as directed by the Engineer, all in accordance with these Specifications.

920.02 MATERIALS. Materials shall conform to the requirements of **Subsections M.10.03, M.10.03.1 and M.10.03.2; Riprap, Bedding for Riprap, and Stone for Riprap,** respectively, of these Specifications.

Gravel borrow shall conform to the requirements of **Subsection M.01.02; Gravel Borrow**, of these Specifications.

Filter fabric shall be a material suitable for erosion control applications and shall be submitted to the Engineer for Approval. Filter fabric materials listed on RI Department of Transportation "Approved Materials List" will be acceptable to use.

920.03 CONSTRUCTION METHODS.

920.03.1 General. Slopes to be protected by riprap shall be free of brush, trees, stumps, and other unsuitable material and shall be graded to a smooth surface. All unsuitable material shall be removed to the depth shown on the Plans, or as authorized, and replaced with gravel borrow. Filled areas will be compacted as specified in **Subsections 202.03.3, Para. a and 202.03.3, Para. b**, respectively, of these Specifications. If a toe trench is shown on the Plans, it shall be excavated and maintained until the riprap is placed.

Protection for structure foundations shall be provided as early as the foundation construction permits. The area to be protected shall be cleaned of waste materials and the surfaces to be protected prepared as shown on the Plans. The type of riprap specified will be placed in accordance with these Specifications.

Riprap shall be placed in conjunction with the construction of the embankment. The elapsed time between construction of the embankment and the placement of the riprap shall be limited to that required to permit the orderly construction of the embankment and to preclude the mixing of embankment and riprap materials. The Contractor shall

maintain the riprap protection until accepted, and any material displaced by any cause shall be replaced to the lines and grades shown on the Plans at no additional cost to the State.

920.03.2 Filter Fabric. The installation of filter fabric shall strictly conform to the manufacturer's guidelines and as modified herein.

a. The surface of finished ground must be smooth and well compacted. All rock, dirt clods, grass clumps, trash and other obstructions which will prevent the mat from laying in direct contact with the soil surface and which may cause the fabric to puncture or tear must be removed.

b. A minimum overlap width of two feet must be used.

c. Anchor pins must be installed immediately after placement of each section in order to protect from wind uplift.

d. The fabric must be toed-in at the top and toe-in or toe-wrapped at the bottom.

920.03.3 Bedding for Riprap. The bedding material shall be placed on the prepared slope or area to the full specified thickness of each layer shown on the Plans. Placement of stone bedding must proceed from the bottom up to the top of the slope. At no time will the stone bedding be dumped onto the fabric from the top of the slope and allowed to roll down the surface of the fabric. Bedding shall be placed in one operation, using methods which will preclude segregation of particle sizes within the layer. The surface of the finished layer should be reasonably even and free from mounds or windows. Additional layers of bedding material, when required, shall be employed which shall preclude the mixing of materials in different layers.

920.03.4 Placed Riprap. Stones for riprap shall be placed on a prepared slope in a pattern that contains minimum voids. The top surface of the riprap shall conform to a true and even plane with a tolerance of plus or minus 4 inches. Joints shall be broken as much as practicable and joint openings to underlying soil shall be avoided by careful arrangement of stone sizes and the chocking of the openings with smaller stones. Larger stones shall be placed near the base of the slope. The stones shall be laid to rest on the bank, and not on adjacent stones. This shall be accomplished by laying stones from the top of the bank, downward, to insure independent support for each such stone.

920.04 METHOD OF MEASUREMENT.

920.04.1 Filter Fabric. "Filter Fabric for Riprap" will be measured by the number of square yards of exposed surface actually placed in accordance with the Plans and/or as directed by the Engineer. Overlapped portions of filter fabric will not be measured for payment.

920.04.2 Riprap and Bedding Material. "Riprap" or "Bedding Material" for riprap will be measured by the following unit, as actually placed in accordance with the Plans and/or as directed by the Engineer:

a. Square Yard. By the number of square yards as computed from surface area measurements parallel to the riprap surface.

920.05 BASIS OF PAYMENT.

920.05.1 Filter Fabric. The accepted quantity of "Filter Fabric for Riprap" will be paid for at the contract unit price per square yard as listed in the Proposal. The price so-stated constitutes full and complete compensation for all labor, materials, and equipment, and all other incidentals required to finish the work, complete and accepted by the Engineer.

920.05.2 Riprap and Bedding Material. The accepted quantities of "Riprap" or "Bedding Material" for riprap of the various types and configurations indicated on the Plans will be paid for at their respective contract unit prices per square yard, as listed in the Proposal. The prices so-stated constitute full and complete compensation for all labor, materials, and equipment, including excavation for riprap or bedding, preparation of subgrade, hauling and placing the material, and all other incidentals required to finish the work, complete and accepted by the Engineer.

Riprap placed outside the specified limits will not be paid for, and the Contractor may be required to remove and dispose of the excess riprap at no additional cost to the State.

Payment will be made under:

Item 920-1	Placed Stone RIPRAP (R-6, R-7, R-8) – Per Square Yard
Item 920-2	Bedding for RIPRAP FS-3 (RI STD 8.3.0) – Per Square Yard
Item 920-3	Filter Fabric for RIPRAP – Per Square Yard
Item 920-4	Placed Stone RIPRAP (R-4) – Site 3 – Per Square Yard
Item 920-5	Bedding for RIPRAP FS-2 (RI STD 8.3.0) – Site 3 – Per Square Yard
Item 920-6	Filter Fabric for RIPRAP – Site 3 – Per Square Yard

END OF SECTION

SECTION L02

SEEDING

L.02.01 DESCRIPTION. This work consists of the preparation of the seed bed, furnishing and placing materials, and the establishing of grassed areas as shown on the Plans, in accordance with these Specifications or as directed by the Engineer. Work shall consist of the following six types:

Type 1. Plantable Soil areas, either flats, to be seeded with a Park Seed Mix or slopes, to be seeded with a Slope Seed Mix;

Type 2. Loamed areas adjacent to lawns or sidewalks, seeded with a Residential Seed
Mix;

Type 3. Temporary seeding using a Temporary Seed Mix on sloped and flat areas of embankments or excavation sites, to provide temporary vegetative cover for erodible soils;

Type 4. Plantable Soil areas, either flats or slopes, seeded with a Native Seed

Mix;

Type 5. Wetland Areas and High Organic Soil, seeded with a Wetland Seed Mix;

Type 5A. Wetland Areas and High Organic Soil, seeded with a Wetland Seed Mix;

Type 6. Plantable Soil areas, either flats or slopes seeded with a Wildflower Seed Mix. Slope areas shall be defined as being 3:1 or greater.

L.02.02 MATERIALS. Lime, fertilizer, mulch, water and seed mixtures shall conform to the applicable requirements of SECTION M.18; LANDSCAPING MATERIALS.

Wetland Seed Mix Type 5A:
TYPE 5A WETLAND SEED MIX. The wetland seed mix consists of a mixture of plant species adapted to growth in wet or frequently inundated environments. Type 5A Wetland seed mix shall be composed of a mixture of at least 15 wetland plant species native to

Rhode Island. Seed shall be produced in nurseries in the northeastern United States. Variation is allowed in the species composition and proportions of seed for individual species provided that:

1. 65 to 80 percent of the seed by weight belongs to the genera Carex, Juncus, Scirpus, Cyperus, and/or Shoenoplectus and:

a) C. intumescens, C. lurida, and C. scoparia in any combination make up 25 to 40 percent of the seed mix by weight.
b) At least three additional species belonging to the genus Carex make up 15 to 25 percent of the mix. Recommended species are C. comosa, C. crinita, C. gynandra, C. lupulina.
c) At least three species that belong to the genus Scirpus (now Shoenoplectus in part) make up 10 to 15 percent of the seed mix by weight. Recommended species include: Scirpus cyperinus, S. atrovirens, and S. acutus.
d) At least one species of the genus Juncus provides five to 10 percent of the seed mix by weight. Recommended species: Juncus acuminatus, J. articulatus, J. canadensis, and J. effusus.

2. An additional eight or more native grasses and forbs species make up the remaining fraction of the seed mixture (minimum 20% by weight). Recommended species include Mud plantain (Alisma plantago-aquatica), swamp milkweed (Asclepias incarnata), flat-top aster (Aster umbellatus), spotted Joe-Pye-Weed (Eupatoriadelphus maculatus), boneset (Eupatorium perfoliatum), grass-leaved goldenrod (Euthamia graminifolia), fowl manna-grass (Glyceria striata), blueflag iris (Iris versicolor), swamp candles (Lysimachia terrestris), monkey flower (Mimulus ringens), sensitive fern (Onoclea sensibilis) (spore), and blue vervain (Verbena hastata).

3. No woody plant species will be acceptable.

4. Seed mixes containing species included in the list of Invasive and other Unacceptable Plant Species in the most recent version of the U. S. Army Corps of Engineers New England District's "New England District Compensatory Mitigation Guidance" will not be accepted. (Document is available at: http://www.nae.usace.army.mil/Regulatory/Mitigation/CompensatoryMitigationGuidance.pdf). Also, no seed of plant species listed in the latest edition of Rare Native Plants of Rhode Island as concern, state threatened, or state historical are to be

included in the seed mix. This list is found at: http://www.rinhs.org/wp-content/uploads/ri_rare_plants_2007.pdf.

L.02.03 CONSTRUCTION METHODS.

L.02.03.1 Seeding Dates. Full advantage shall be taken of time and weather conditions best suited for seeding. The normal dates for seeding shall be as follows:

Type 1, Type 2, and Type 4 dates shall be:

Spring Seeding: April 1 to May 31.
Fall Seeding: August 15 to October 15.

Type 3 seeding may be done at anytime between March 15 and November 15 with approval of the Engineer. Type 3 seeding shall not be permitted on frozen ground.

Type 5 seeding dates shall be as follows:

Spring Seeding: May 1 to June 15
Fall Seeding: August 15 to September 30

Type 5A seeding dates shall be as follows:

Spring Seeding: April 1 to June 15
Alternate Seeding: June 15 to July 15 (Watering will be required to germinate and grow out seedlings)

Type 6 seeding dates shall be as follows:

Spring Seeding: April 1 to May 1
Fall Seeding: September 1 to September 30

Seeding at other than the above time will be allowed only with the written permission of the Engineer. The Engineer may suspend work when he/she determines that soil or weather conditions are unsuitable for raking and/or seeding. The Contractor may resume work when directed by the Engineer.

The Contractor shall notify the Engineer at least 48 hours in advance of the time intended for commencement of seeding. No payment will be made for work performed when

the Engineer is not present. In cases where there is existing or new plant material, care shall be taken to insure that no lime, fertilizer, mulch and/or seed mix comes in contact with the plant material or their mulched areas.

L.02.03.2 Preparation of Areas for Seeding.

a. Type 1 (General Highway Seeding). Type 1 areas shall be raked, either by hand or mechanically (i.e. power rake), so as to produce a loose, friable seed bed. Slopes 3:1 and greater shall be tracked with a dozer. The resulting track imprints shall be perpendicular to the flow of water.

All sticks, litter, wire, weeds, cable, cobbles or stones larger than 1 inch in any dimension shall be removed and legally disposed of.

Where the seed bed has become compacted, it shall be scarified to a depth of 5 inches prior to raking. No seeding of this type will be permitted on areas where the seed bed has not been properly prepared or where the soil is compacted.

b. Type 2 (Residential Seeding). Type 2 areas shall be hand raked to a finished grade. All sticks, litter, wire, weeds, cable, cobbles and stones larger than ½-inch in any dimension shall be removed and legally disposed of. After hand raking, and at the discretion of the Engineer, the Contractor shall roll, with a hand roller, the entire area. The finish grade of the proposed area shall blend into the adjacent lawns (when applicable).

Where the seed bed has become compacted, it shall be scarified to a depth of 5 inches prior to fine raking. No seeding of this type will be permitted on areas where the seed bed has not been properly prepared or where the soil is compacted.

c. Type 3 (Temporary Seeding). Type 3 areas to be seeded shall be free of depressions and unprotected channels where runoff may cause erosion.

d. Type 4 (Native Grass Seeding). Type 4 areas shall be prepared in accordance with Para. a, above.

e. Type 5 and 5A (Wetland Seeding). Type 5 and 5A areas shall not be raked. All sticks, litter, wire, weeds, cable, cobbles or stones larger than 4 inches in any dimension shall be removed and legally disposed of without disturbing the finish grade.

f. Type 6 (Wildflower Seeding). Type 6 areas shall be prepared in

accordance with Para. a, above, except as designated below.

Type 6 areas previously seeded or having existing vegetation shall have all sod removed from the site proposed for wildflower seeding. Plantable soil, as designated on the Plans or as directed by the Engineer, shall be applied to raise the planting bed to final grade (after sod removal). Areas shall be raked to produce a loose friable soil.

L.02.03.3 Application of Lime. Lime (ground or pelletized) shall be applied dry and spread evenly over the entire surface to be seeded. Unless otherwise specified, the application rate shall be 1 ton per acre. Raking shall be completed after the fertilizer has been applied. NO LIME WILL BE APPLIED ON TYPE 3, TYPE 4, AND TYPE 5 AREAS.

L.02.03.4 Application of Fertilizer. After the application of lime, fertilizer shall be spread at the following rates:

Type 1 and 2 -	Eight hundred-fifty pounds (850 lbs.) per acre.
Type 3 -	Six hundred-fifty pounds (650 lbs.) per acre.
Type 4 -	Five hundred pounds (500 lbs.) per acre.
Type 5 and 5A-	No fertilizer shall be applied.
Type 6 -	One hundred-fifty pounds (150 lbs.) per acre.

Both the lime and fertilizer shall be thoroughly incorporated into the soil by raking. Raking shall be in accordance with the applicable requirements of Subsection L.02.03.2, above.

L.02.03.5 Sowing of Seed. After the seed beds have been prepared as outlined in Subsections L.02.03.2 through L.02.03.4, above, grass seed conforming to the respective formula specified in Subsection M.18.10; Seed Mixtures, shall be applied according to the specified rates. Application of fertilizer, grass seed, and cellulose fiber mulch for Type 1, Type 2, Type 3, Type 4, Type 5, and Type 6 may be accomplished in one operation by the use of a hydroseeder.

a. Type 1 (General Highway Seeding). Type 1 areas shall be seeded with Park Mix on flats and with Slope Seed Mix on slopes. Both mechanical and hydroseeding methods may be used.

b. Type 2 (Residential Seeding). Type 2 areas shall be seeded with a Residential Seed Mix. Additional hand raking and rolling with a light roller shall be employed in lieu of mulch. Such areas will not be accepted until a generally weed-free, 3-inch stand of grass

is established.

c. Type 3 (Temporary Seeding). Type 3 areas shall be seeded with a Temporary Seed
Mix on flats and slopes. Both mechanical and hydroseeding methods may be used.

d. Type 4 (Native Grass Seeding). Type 4 areas shall be seeded with a Native Seed Mix. Both mechanical and hydroseeding methods may be used.

e. Type 5 and 5A (Wetland Seeding). Type 5 areas shall be seeded with a Wetland Seed Mix. In areas where there is access for a hydroseeder, the Wetland Seed Mix shall be spread using this method only. In areas where there is no access for a hydroseeder, the wetland seed mix shall be spread by a hand held spreader.

Type 5A: Application Rate: 1 LB/2500 SQ. FEET. Lightly rake to ensure proper soil-seed contact. If spring conditions are drier than usual, watering may be required. Watering requirements will be at the discretion of the Engineer.

f. Type 6 (Wildflower Seeding). Type 6 areas shall be seeded with a Wildflower Seed Mix. Seeds may be mechanically applied by overseeding the area with a slit seeder or broadcast with the use of a drop or broadcast spreader. A hydroseeder may be used. When hydroseeding method is used, the seed, fertilizer, and 10 percent of the mulch shall be used in the first application followed by the remaining 90 percent of mulch to be used in a second application.

If a slit seeder is used, seed disbursement shall be 3 inches on center and 1/4-inch deep. Two passes, the second perpendicular to the first shall be made. Small seeds shall be seeded separately from larger seed.

If a drop or broadcast seeding method is used, large seed shall be spread separately from small seeds. Each seed type (large or small) disbursement shall be applied in two passes, the second perpendicular to the first. The area shall be hand raked to provide a soil coverage of a 1/4-inch.

L.02.03.6 Mulching. All seeded areas shall be covered with a suitable mulch at the time of the application of the seed. Unless otherwise specified, cellulose fiber mulch shall be used. Cellulose fiber mulch shall conform to Subsection M.18.07.1 of these Specifications.

Cellulose fiber mulch may be employed separately or as part of a hydroseeding operation. If cellulose fiber mulch is applied separately, it shall be applied immediately after the seeding operation.

Cellulose fiber mulch that becomes adhered to signs, sign posts, lighting standards, new or existing plant materials and/or walls shall be removed.

L.02.03.7 Care During Construction. Any areas which fail to show a uniform growth of grass for any reason whatsoever shall be reseeded until the areas are covered with a satisfactory growth of grass as approved by the Engineer.

The seed, fertilizer, etc. used in the reseeding operations shall be at the same application rates and during appropriate seeding dates as those previously specified unless otherwise directed by the Engineer.

a. Watering. The Contractor shall water all Type 1, Type 2, Type 4, and Type 6 seeded areas within 72 hours of the seeding operation. One additional watering may be required and such will be at the discretion of the Engineer.

Water shall be applied at a controlled rate and in such a manner to insure the water reaches the root zone. Watering operations shall not flood adjacent areas, erode soil or cause any damage to the seeded areas.

b. Mowing. Mowing for Type 1 seeded areas shall be accomplished in two mowings per year on areas flatter than 3:1. Mowing on Type 2 seeded areas shall be performed when the grass has obtained a height of 4 inches and shall be maintained at a 4-inch height until accepted. Mowing will be performed for Type 1 and Type 2 only.

Each cutting shall result in a stand of evenly mowed grass, 3 inches tall immediately following the cutting. Neat trimming shall be necessary around all poles, trees, ledges, delineators, curbs, piers, abutments and other structures falling within the seeded areas; this trimming will be conducted simultaneously with the mowing during each cutting operation. All curbs shall be trimmed and exposed; all gutters will be left free of all grass clippings.

c. Failure to Perform Care During Construction. If the Engineer decides that the Care During Construction tasks as specified in the Contract have not been performed, the daily charge set forth in Special Provision Code L.02.1000 will be deducted from monies due the Contractor as a charge for failure to comply with this Specification. The daily charge will continue each consecutive calendar day until the deficiencies have been

corrected to the satisfaction of the Engineer.

L.02.04 METHOD OF MEASUREMENT. "Seeding" will be measured by the number of square yards actually seeded in accordance with the Plans, and/or as directed by the Engineer.

L.02.05 BASIS OF PAYMENT. The accepted quantity of "Seeding" will be paid for at the contract unit price per square yard as listed in the Proposal. The price so-stated constitutes full and complete compensation for preparation of seed beds, for furnishing and applying all lime, fertilizer, mulch, seed, raking, mowing, watering, and care during construction of the seeded areas, for all labor, materials and equipment, and for all incidentals required to finish the work, complete and accepted by the Engineer.

Payment for all types shall be made as follows:

Eighty-five percent of the total contract price will be paid at the time of initial seeding. The remainder, 15 percent, will be paid when the newly seeded areas have been accepted.

If seeding is done at a time other than the specified seeding date, the entire payment for seeding will be withheld until a uniform acceptable stand of turf, as determined by the Engineer, has been obtained.

Payment will be made under:

Item L02-1 Aviation Seed Mix – Site 1 – Per Square Yard
Item L02-2 General Highway Seeding – Site 2 – Per Square Yard
Item L02-3 Native Seed Mix (Type 5) – Site 3 – Per Square Yard
Item L02-4 Wetland Seed Mix (Type 5A) – Site 3 – Per Square Yard
Item L02-5 Wetland Seed Mix (Type 5) – Site 14 – Per Square Yard
Item L02-6 Aviation Seed Mix – Site 14 – Per Square Yard
Item L02-7 Wetland Seed Mix (Type 5A) – Site 15 – Per Square Yard
Item L02-8 Wetland Seed Mix (Type 5) – Site 1 – Per Square Yard

END OF SECTION

VOL. NO.	SHEET NO.	TOTAL SHEETS
1	3	129

ESTIMATED QUANTITIES – VOLUME I:

ITEM NO.	DESCRIPTION	UNIT	ESTIMATED QUANTITY
M-001.1	FIELD OFFICE	Month	12
M-001.2	RADIOS	Allow	1
M-001.3	SAFETY CONES AND SIGNS	Allow	1
M-001.4	TEMPORARY VSR/HAUL ROAD	Allow	1
P-102.1	BITUMINOUS CONCRETE MILLING (0"-4")	SY	5,000
P-102.2	BITUMINOUS PAVEMENT REMOVAL	SY	40,000
P-102.3	CONCRETE PAVEMENT REMOVAL	SY	28,000
P-102.4	SAW CUT PAVEMENT	LF	300
P-151.1	CLEARING AND GRUBBING	ACRE	4
P-152.1	MUCK EXCAVATION	CY	87,500
P-152.2	UNCLASSIFIED EXCAVATION	CY	6,000
P-152.3	FOREIGN BORROW	CY	181,000
P-154.1	SUBBASE COURSE, 4-INCH	SY	22,000
P-154.2	SUBBASE COURSE, 7-INCH	SY	31,000
P-156.1	EROSION CONTROL WATTLES, 8-INCH	LF	525
P-156.2	EROSION CONTROL WATTLES, 24-INCH	LF	8,500
P-156.3	INLET PROTECTION/CATCH BASIN FILTER BAGS	EA	22
P-156.4	EROSION MATTING	SY	5,000
P-156.5	STABILIZED CONSTRUCTION ENTRANCE	EA	3
P-156.8	SILT WATTLE	LF	10,000
P-156.9	SEDIMENT CONTROL FILTER BAGS	EA	25
P-156.10	TEMPORARY DEWATERING	LS	1
P-209.1	CRUSHED AGGREGATE BASE COURSE, 4-INCH	SY	22,000
P-209.2	CRUSHED AGGREGATE BASE COURSE, 8-INCH	SY	31,000
M-301.1	RIDOT AGGREGATE OR GRAVEL BASE COURSE, 12-INCH	SY	7,500
P-401.1	BITUMINOUS SURFACE COURSE PAVEMENT	TN	8,000
P-401.2	BITUMINOUS BASE COURSE PAVEMENT	TN	10,500
M-401.1	RIDOT BITUMINOUS SURFACE COURSE PAVEMENT	TN	900
M-401.2	RIDOT BITUMINOUS BASE COURSE PAVEMENT	TN	1,300
P-555.1	EMAS BED INSTALLATION	LS	1
P-556.1	CONCRETE ANCHOR BEAM INSTALLATION	LS	1
P-602.1	BITUMINOUS PRIME COAT	GAL	27,000
P-603.1	BITUMINOUS TACK COAT	GAL	15,000
P-620.1	PERMANENT PAVEMENT MARKINGS, NON-REFLECTIVE	SF	38,000
P-620.2	PERMANENT PAVEMENT MARKINGS, REFLECTIVE	SF	110,000
P-620.3	PERMANENT PAVEMENT MARKINGS, THERMOPLASTIC	SF	1,800
P-620.4	REMOVAL OF EXISTING PAVEMENT MARKINGS	SF	2,000
P-621.1	RUNWAY PAVEMENT GROOVING	SY	25,000
F-162.1	TEMPORARY FENCE - 8-FT CHAIN LINK WITH BARB WIRE	LF	2,500
F-162.2	TEMPORARY FENCE - 8-FT BARRIER & CHAIN LINK WITH BARB WIRE	LF	1,200
F-162.3	NEW FENCE - 8-FT CHAIN LINK WITH BARB WIRE	LF	3,200
F-162.4	REMOVE EXISTING FENCE, GATE AND FOUNDATIONS	LF	2,000
F-162.5	20-FOOT WIDE SWING GATE	EA	2
D-701.1	REINFORCED CONCRETE PIPE, 12-INCH	LF	70
D-701.2	REINFORCED CONCRETE PIPE, 18-INCH	LF	593
D-701.3	REINFORCED CONCRETE PIPE, 24-INCH	LF	495
D-701.4	REINFORCED CONCRETE PIPE, 24-INCH, PERFORATED	LF	620
D-701.5	REINFORCED CONCRETE PIPE, 30-INCH	LF	341
D-701.6	REINFORCED CONCRETE PIPE, 30-INCH, PERFORATED	LF	634
D-701.7	REINFORCED CONCRETE PIPE, 36-INCH	LF	38
D-701.8	DUCTILE IRON PIPE, 36-INCH	LF	240
D-701.9	PIPE REMOVAL	LF	5,179
D-701.10	REINFORCED CONCRETE PIPE, 15-INCH	LF	360
D-702.1	TRENCH DRAIN	LF	350
D-751.1	HEAVY DUTY DRAIN INLET STRUCTURE	EA	13
D-751.2	ALTER EXISTING DRAINAGE STRUCTURE	EA	5
D-751.3	REMOVE EXISTING DRAINAGE STRUCTURE	EA	34
D-751.4	HEAVY DUTY ELECTRICAL MANHOLE	EA	3
D-751.5	RESET ELECTRIC MANHOLE FRAME/COVER	EA	3
D-752.1	RCP END WALL 36-INCH PIPE	EA	1
D-752.2	STONE RIPRAP AT PIPE INLET/OUTFALL	SY	164
M-003.1	INFILTRATION TRENCH - 1A	CF	95,000
M-003.2	INFILTRATION TRENCH - 1B	CF	30,000
M-003.3	INFILTRATION TRENCH - 2A	CF	118,000
M-003.4	INFILTRATION TRENCH - 2B	CF	49,000
M-004.1	SAND FILTER	EA	2
T-901.1	PERMANENT SEEDING	SY	120,000
T-901.2	TEMPORARY SEEDING	SY	62,000
T-905.1	TOPSOIL - BORROW (MIN. 4" DEPTH)	SY	76,000

ESTIMATED QUANTITIES – VOLUME I:

T-908.1	MULCHING	SY	176,000
X-105.1	GEOTEXTILE, CLASS 4	SY	53,000
X-106.1	SHEET PILING	SF	50,000
X-107.1	GROUND WATER DETENTION SYSTEM	EA	2
X-108.1	10-INCH SEWER FORCE MAIN WITH CEMENT LINING	LF	880
X-108.2	CLSM PIPE FILL	LF	860
X-108.3	SEWER STRUCTURE REMOVAL	EA	1
X-109.1	WASTEWATER COMBINATION VALVE	EA	2
X-110.1	SERVICE CLEANOUT	EA	1
X-111.1	FILTER FABRIC RETENTION BASIN	Allow	1
L-108-5.1	TRACE & IDENTIFY EXISTING CABLES	Allow	1
L-108-5.2	NO. 8 AWG, L-824C, 5KV CABLE INSTALLED IN TRENCH (DIRECT BURIED)	LF	6,400
L-108-5.3	NO. 8 AWG, L-824C, 5KV CABLE INSTALLED IN DUCT OR CONDUIT	LF	7,000
L-108-5.4	NO. 6 AWG BARE COUNTERPOISE WIRE INSTALLED IN TRENCH, INCLUDING GROUND RODS AND GROUND CONNECTORS	LF	12,000
L-108-5.5	NO. 2 AWG, 600V CABLE INSTALLED IN DUCT OR CONDUIT	LF	4,000
L-108-5.6	NO. 6G AWG, 600V INSULATED GROUND WIRE INSTALLED IN DUCT OR CONDUIT	LF	2,000
L-108-5.7	REMOVE EXISTING CABLE INSTALLED IN CONDUIT OR DUCT	LF	6,300
L-108-5.8	REMOVE EXISTING CABLE INSTALLED IN TRENCH (DIRECT BURIED)	LF	10,000
L-109-5.1	INSTALLATION OF AIRPORT VAULT EQUIPMENT IN PLACE	LS	1
L-110-5.1A	2-INCH DIAMETER SCHEDULE 40 PVC CONDUIT, DIRECT BURIED	LF	1,800
L-110-5.1B	2-INCH DIAMETER SCHEDULE 40 PVC CONDUIT, ENCASED IN CONCRETE	LF	5,700
L-110-5.1C	2-WAY CONCRETE ENCASED DUCT BANK (4-INCH)	LF	80
L-110-5.1D	4-WAY CONCRETE ENCASED DUCT BANK (4-INCH)	LF	170
L-110-5.2	CABLE/CONDUIT/DUCT BANK MARKERS	EA	4
L-110-5.3	REMOVAL OF ELECTRICAL CONDUIT AND DUCT BANK	LF	6,300
L-110-5.4	REMOVAL OF ELECTRICAL HANDHOLE/JUNCTION CAN	EA	4
L-125-5.1A	L-862 HIGH INTENSITY BASE MOUNTED QUARTZ RUNWAY EDGE LIGHT INSTALLED	EA	16
L-125-5.1B	L-862E HIGH INTENSITY BASE MOUNTED QUARTZ RUNWAY END LIGHT INSTALLED	EA	8
L-125-5.1C	L-861T MEDIUM INTENSITY BASE MOUNTED QUARTZ TAXIWAY EDGE LIGHT INSTALLED	EA	66
L-125-5.1D	JUNCTION BASE CANS	EA	6
L-125-5.2	INSTALL NEW AIRFIELD GUIDANCE SIGN	EA	2
L-125-5.3	AIRFIELD GUIDANCE SIGN PANEL REPLACEMENT	EA	29
L-125-5.4	INSTALL PAVEMENT SENSORS	EA	2
L-125-5.5A	REMOVE EXISTING LIGHT	EA	40
L-125-5.5B	REMOVE EXISTING LIGHT & BASE CAN	EA	48
L-125-5.6	REMOVE EXISTING AIRFIELD GUIDANCE SIGN	EA	2
L-125-5.7	RELOCATE EXISTING DISTANCE REMAINING SIGN	EA	1
L-127-5.1	INSTALL NEW PRECISION APPROACH PATH INDICATOR (PAPI)	SET	1
L-127-5.2	INSTALL NEW PRECISION APPROACH PATH INDICATOR (PAPI) WIRELESS CONTROLS	LS	1
L-127-5.3	REMOVE EXISTING VISUAL APPROACH SLOPE INDICATOR (VASI)	SET	1
L-127-5.4	UTILITY FEES	Allow	1
L-853-5.1	RETROREFLECTIVE EDGE MARKERS	EA	62
M-002.1	FAA - MALSR - PHASE A	LS	1
M-002.2	FAA - MALSR - PHASE B	LS	1
M-002.3	FAA - EFGS - PHASE A	LS	1
M-002.4	FAA - EFGS - PHASE B	LS	1

REVISION NUMBER	REVISION DATE	DESCRIPTION
1	4/16/14	ADDENDUM NO. 2

Rhode Island Airport Corporation

T.F. GREEN AIRPORT

WARWICK, RHODE ISLAND

SHEET TITLE

QUANTITIES – VOLUME I

DESIGNED	DRAWN	CHECKED	APPROVED
CAF	NG	LBM	LBM

AECOM

McFarland Johnson
53 REGIONAL DRIVE, CONCORD, NH 03301-5022
PH: 603-225-2978 FAX: 603-225-0595

PROJECT NO. 24873 (RIAC)

DATE: MARCH 2014

DRAWING NO. G003

VOL. NO.	SHEET NO.	TOTAL SHEETS
1	4	129

ESTIMATED QUANTITIES – VOLUME II:

Item	Description	Quantity	Unit
GENERAL			
212-2	CLEANING AND MAINTENANCE OF EROSION CONTROL.S.	1	ALLOW
L07-1	EXTENDED ESTABLISHMENT PERIOD - ALL SITES	8	MONTH
SITE 1			
211-1	CONSTRUCTION ACCESS	120	SY
201-1	CLEARING AND GRUBBING	2.91	ACRE
202-1	UNCLASSIFIED EXCAVATION	25,530	C.Y.
202-2	GRAVEL BORROW	100	C.Y.
L01-1	6" M.18.02 PLANTABLE SOIL	2,200	S.Y.
L01-2	12" HIGH ORGANIC - TEXTURE SOIL	12,000	S.Y.
L04-1	REFERTILIZATION OF SEEDED AND GRASSED AREAS	0.25	ACRE
L05-1	STRAW MULCH	2.91	ACRE
L02-1	AVIATION SEED MIX	2,200	S.Y.
L02-8	WETLANDS SEED MIX (TYPE 5)	12,000	S.Y.
L06-1	CLETHRA ALNIFOLIA	1,071	EA
L06-2	ALNUS RUGOSA	735	EA
L06-3	SALIX DISCOLOR	343	EA
206-1	SINGLE COMPOST FILTER TUBE	2,714	L.F.
SP-05-1	COIR FIBER EROSION CONTROL SLOPE MATTING	2,200	S.Y.
SP-08-1	CONTROL OF INVASIVE PLANTS EXISTING ON SITE	1	LS
SITE 2			
201-1	CLEARING AND GRUBBING	475	S.Y.
201-6	R&D FLEXIBLE PAVEMENT	800	S.Y.
201-7	R&D PIPE - ALL SIZES	250	L.F.
201-8	R&D GUARDRAIL AND POSTS - ALL TYPES	250	L.F.
201-9	R&D HEADWALL	2	EA.
203-1	STRUCTURAL EXCAVATION - MUCK	20	C.Y.
203-2	STRUCTURAL EXCAVATION - UNCLASSIFIED	575	C.Y.
203-3	CRUSHED STONE FILL UNDER STRUCTURES	100	C.Y.
203-4	PERVIOUS FILL	75	C.Y.
208-1	TEMPORARY STREAM DIVERSION AND DEWATERING	1	L.S.
204-1	TRIMMING AND FINE GRADING	1,300	S.Y.
206-2	SINGLE COMPOST FILTER TUBE	560	L.F.
209-1	BALED HAY CATCH BASIN INLET PROTECTION (STD 9.8.0)	24	L.F.
212-1	CLEANING & MAINTENANCE OF EROSION CONTROLS	1	ALLOW
302-1	GRAVEL BORROW SUB BASE COURSE	350	C.Y.
401-1	BITUMINOUS BASE COURSE	210	TON
401-2	BITUMINOUS BINDER COURSE	105	TON
401-3	BITUMINOUS SURFACE COURSE TYPE I-1	105	TON
403-1	ASPHALT EMULSION TACK COAT	1,815	S.Y.
701-1	INSTALLATION AND INSPECTION OF WATER FACILITIES - WARWICK WATER DEPARTMENT	1	L.S.
701-2	INSTALLATION AND INSPECTION OF WATER FACILITIES - WARWICK WATER DEPARTMENT - OVERTIME WORK	1	ALLOW
701-3	FURNISH AND INSTALL WATERLINE SUPPORT ASSEMBLIES	4	EA.
701-4	FURNISH AND INSTALL GAS PIPE STEEL SUPPORT ASSEMBLIES	4	EA.
800-1	PRECAST REINFORCED CONCRETE CULVERT AND WINGWALL.S.	1	L.S.
901-1	GUARDRAIL STEEL BEAM SINGLE FACE	430	L.F.
901-2	TERMINAL END SECTION SINGLE FACE (STD 34.3.2)	4	EA.
907-1	WATER FOR DUST CONTROL	30	MGAL
920-1	PLACED STONE RIPRAP R-6, R-7, R-8	225	S.Y.
920-2	BEDDING FOR RIPRAP FS-3 (STD 8.3.0)	225	S.Y.
920-3	FILTER FABRIC FOR RIPRAP	225	S.Y.
922-1	TEMPORARY CONSTRUCTION SIGN	200	S.F.
926-1	PRECAST MEDIAN BARRIER FOR TEMPORARY TRAFFIC CONTROL (STD 40.5.0)	130	L.F.
927-1	RELOCATE PRECAST MEDIAN BARRIER FOR TEMPORARY TRAFFIC CONTROL	260	L.F.
932-1	FULL DEPTH SAWCUT OF BITUMINOUS PAVEMENT	75	L.F.
937-1	MAINTENANCE AND MOVEMENT OF TRAFFIC PROTECTION	1	L.S.
L01-3	PLANTABLE SOIL 4" DEEP	250	S.Y.
L02-2	GENERAL HIGHWAY SEEDING	250	S.Y.
T20-1	TEMPORARY WATERBOURNE PAVEMENT MARKING WHITE - 4 INCH	1,000	L.F.
T20-2	4" EPOXY RESIN PAVEMENT MARKING YELLOW	750	L.F.
914-1	TRAFFIC PERSON (UNIFORMED FLAGGER)	750	HR.
923-1	DRUM BARRICADE STANDARD 26.2.0	2,000	BARRELS/DAY
924-1	TRAILER MOUNTED PORTABLE TRAFFIC CONTROL SIGNAL	3	PMTH
925-1	PORTABLE CHANGEABLE MESSAGE SIGN	150	PDAY
931-1	CLEANING AND SWEEPING PAVEMENT	3,000	HSY
SITE 3			
211-2	CONSTRUCTION ACCESS	240	SY
201-3	CLEARING AND GRUBBING	2.58	ACRE
202-3	UNCLASSIFIED EXCAVATION	8,600	C.Y.
202-5	GRAVEL BORROW	500	C.Y.
202-4	ON-SITE WETLAND FILL	2,390	C.Y.
L01-4	6" M.18.02 PLANTABLE SOIL	1,100	S.Y.
L01-5	12" HIGH ORGANIC - TEXTURE SOIL	2,400	S.Y.

ESTIMATED QUANTITIES – VOLUME II:

L04-2	REFERTILIZATION OF SEEDED AND GRASSED AREAS	0.22	ACRE
L05-2	STRAW MULCH	2.58	ACRE
L02-3	NATIVE SEED MIX (TYPE 4)	1,100	S.Y.
L02-4	WETLAND SEED MIX (TYPE 5A)	9,600	S.Y.
206-3	SINGLE COMPOST FILTER TUBE	5,950	L.F.
SP-05-2	COIR FIBER EROSION CONTROL SLOPE MATTING	1,100	S.Y.
SP-06-1	COBBLE-GRAVEL-SAND MATERIAL FOR STREAMBED	336	C.Y.
201-11	REMOVE AND DISPOSE CHAIN LINK FENCE	301	L.F.
903-2	PEDESTRIAN GATE IN CHAIN LINK FENCE	1	EA.
201-12	REMOVE AND RE-INSTALL CONCRETE BLOCK FISH GRATE STRUCTURE	1	EA.
903-1	REMOVE AND REPLACE CHAINLINK FENCE	130	L.F.
L11-1	PRESERVE TREE	6	EA.
201-10	R&D PIPE - ALL SIZES	150	L.F.
SP-03-1	LOG VANE	4	EA
SP-04-1	ROOTWAD	6	EA
L06-4	ALNUS RUGOSA	290	EA
L06-5	SALIX NIGRA	60	EA
L06-6	CORNUS AMOMUM	290	EA
L06-7	SAMBUCUS CANADENSIS	120	EA
L06-8	VIBURNUM DENTATUM	220	EA
L06-9	NYSSA SYLVATICA	25	EA
L06-10	ILEX VERTICILLITA	60	EA
L06-11	VACCINIUM CORYMBOSUM	60	EA
SP-08-2	CONTROL OF INVASIVE PLANTS EXISTING ON SITE	1	LS
208-2	TEMPORARY STREAM DIVERSION AND DEWATERING	1	L.S.
920-4	PLACED STONE RIPRAP R-4	100	SY
920-5	BEDDING FOR RIPRAP FS-3 (STD 8.3.0)	100	SY
920-6	FILTER FABRIC FOR RIPRAP	100	SY
SITE 14			
201-4	CLEARING AND GRUBBING	0.60	ACRE
202-6	UNCLASSIFIED EXCAVATION	2,330	C.Y.
L01-6	12" HIGH ORGANIC - TEXTURE SOIL	2,900	S.Y.
L04-3	REFERTILIZATION OF SEEDED AND GRASSED AREAS	0.60	ACRE
L05-3	STRAW MULCH	0.60	ACRE
L02-5	WETLAND SEED MIX (TYPE 5)	150	S.Y.
L02-6	AVIATION SEED MIX	1,400	S.Y.
L06-12	CLETHRA ALNIFOLIA	87	EA
L06-13	ALNUS RUGOSA	63	EA
L06-14	SALIX DISCOLOR	62	EA
SP-08-3	CONTROL OF INVASIVE PLANTS EXISTING ON SITE	1	LS
206-4	SINGLE COMPOST FILTER TUBE	770	L.F.
202-7	GRAVEL BORROW	5	C.Y.
SITE 15			
201-5	CLEARING AND GRUBBING	0.35	ACRE
202-8	UNCLASSIFIED EXCAVATION	790	C.Y.
L01-8	12" HIGH ORGANIC - TEXTURE SOIL	900	S.Y.
SP-06-2	COBBLE-GRAVEL-SAND MATERIAL FOR STREAMBED	200	C.Y.
L01-7	M18.10.3 RIDOT SLOPE MIX	450	S.Y.
L02-7	WETLAND SEED MIX TYPE 5A	400	S.Y.
L04-4	REFERTILIZATION OF SEEDED AND GRASSED AREAS	0.35	ACRE
SP-07-1	STILLING BASIN - SITE 15	1	L.S.
SP-08-3	CONTROL OF INVASIVE PLANTS EXISTING ON SITE	1	LS
SP-02-1	CROSS VANE STRUCTURE	1	L.S.
SP-03-2	LOG VANE	1	EA
SP-04-2	ROOTWADS	2	EA
SP-05-3	COIR FIBER EROSION CONTROL SLOPE MATTING	516	S.Y.
SP-05A-1	COIR LOG	110	LF
L05-4	STRAW MULCH	0.35	ACRE
L06-15	ALNUS RUGOSA	140	EA
L06-16	CORNUS AMOMUM	120	EA
L06-17	VIBURNUM DENTATUM	30	EA
903-4	16' WIDE SWING GATE (8' HIGH WITH BARBED WIRE)	1	EA
903-3	REMOVE AND DISPOSE OF CHAIN LINK FENCE	16	L.F.

REVISION NUMBER	REVISION DATE	DESCRIPTION
1	4/16/14	ADDENDUM NO. 2

Rhode Island Airport Corporation

T.F. GREEN AIRPORT

WARWICK, RHODE ISLAND

SHEET TITLE

QUANTITIES – VOLUME II

DESIGNED	DRAWN	CHECKED	APPROVED
CAF	NG	LBM	LBM

AECOM

McFarland Johnson
53 REGIONAL DRIVE, CONCORD, NH 03301-8022
PH. 603-225-2878 FAX: 603-225-0080

PROJECT NO. 24873 (RIAC)

DATE: MARCH 2014

DRAWING NO. G004

VOL. NO.	SHEET NO.	TOTAL SHEETS
1	24	129

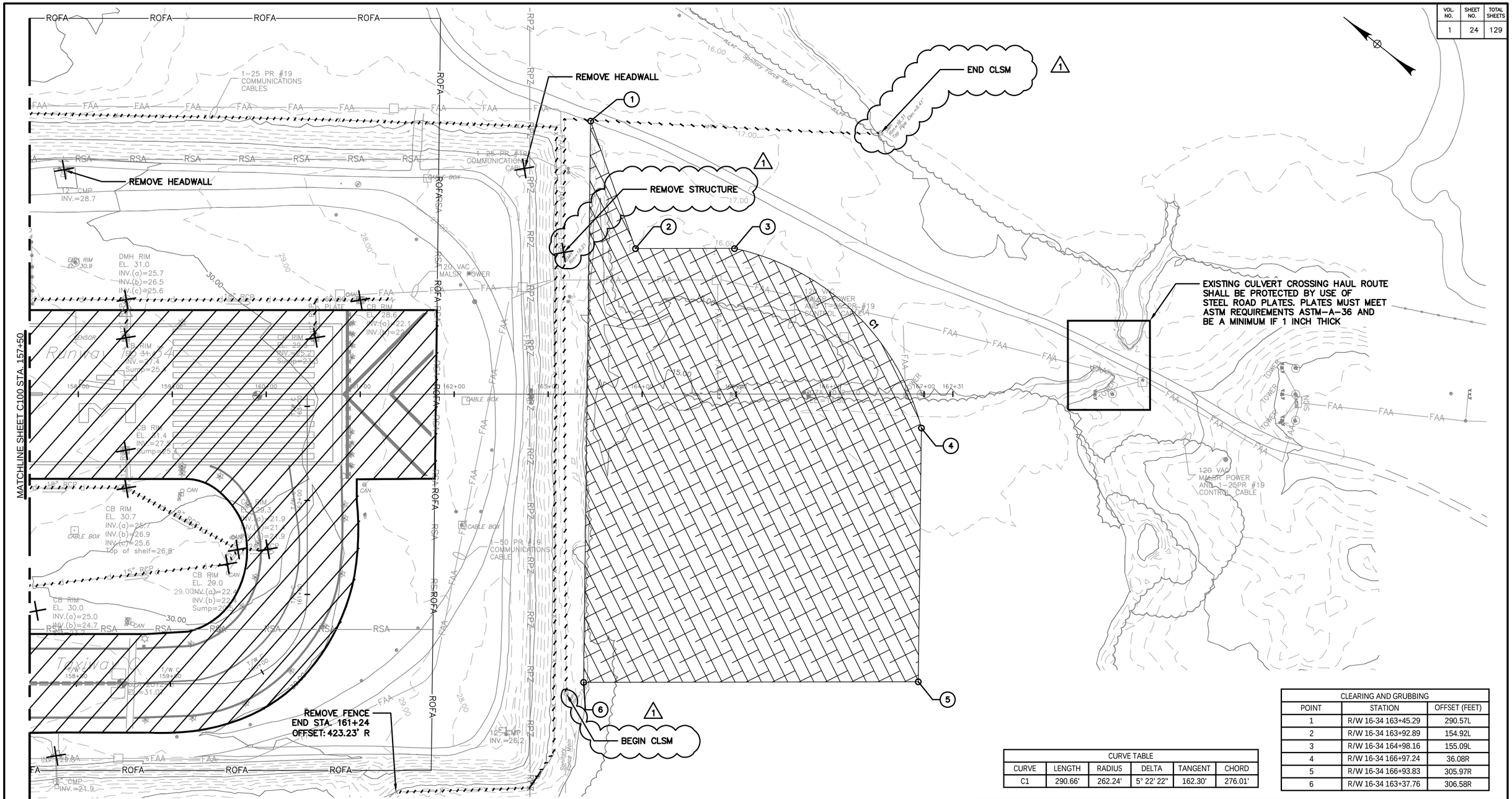

CLEARING AND GRUBBING		
POINT	STATION	OFFSET (FEET)
1	R/W 16-34 163+45.29	290.57L
2	R/W 16-34 163+92.89	154.92L
3	R/W 16-34 164+98.16	155.09L
4	R/W 16-34 166+97.24	36.08R
5	R/W 16-34 166+93.83	305.97R
6	R/W 16-34 163+37.76	306.58R

CURVE TABLE					
CURVE	LENGTH	RADIUS	DELTA	TANGENT	CHORD
C1	290.66'	262.24'	5° 22' 22"	162.30'	276.01'

LEGEND

EXISTING		EXISTING		EXISTING		DEMOLITION	
PAVEMENT		LOCALIZER CRITICAL AREA	LCA	DRAINAGE MANHOLE	D	FULL DEPTH PAVEMENT REMOVAL	
CONTOUR LINES	ELEV.	RWY/TWY EDGE LIGHTS	OR	SEWER MANHOLE	S	REMOVE AS SHOWN	X
UNDERGROUND ELECTRIC	ue	UTILITY POLE	NO.	ELECTRIC MANHOLE	E	PIPE REMOVAL	
EXISTING DRAINAGE	d d	POLE GUY		HYDRANT	HYD	FENCE REMOVAL	
FAA CABLE	FAA FAA	CATCH BASIN	OR CB OR CB	BORING	NO.	SANITARY FORCE MAIN REMOVAL	
RUNWAY SAFETY AREA	RSA	MANHOLE	MH OR M OR H	SPOT GRADE	00x00	CLEARING AND GRUBBING	
RUNWAY OBJECT FREE AREA	ROFA	WETLAND PERIMETER		WETLAND BOUNDARY AND FLAG MARKERS			

50' 0 50' 100'
GRAPHIC SCALE

KEY PLAN

REVISION NUMBER	REVISION DATE	DESCRIPTION
1	4/16/14	ADDENDUM NO. 2

Rhode Island Airport Corporation

T.F. GREEN AIRPORT

WARWICK, RHODE ISLAND

SHEET TITLE
EXISTING CONDITIONS AND DEMOLITION PLAN-SHEET 3

DESIGNED	DRAWN	CHECKED	APPROVED
CAF	NG	LBM	LBM

AECOM

McFarland Johnson
53 REGIONAL DRIVE, CONCORD, NH 03301-5022
PH: 603-225-2575 FAX: 603-225-0095

PROJECT NO. 24873 (RIAC)
DATE: MARCH 2014
DRAWING NO. C102

VOL. NO.	SHEET NO.	TOTAL SHEETS
1	34	129

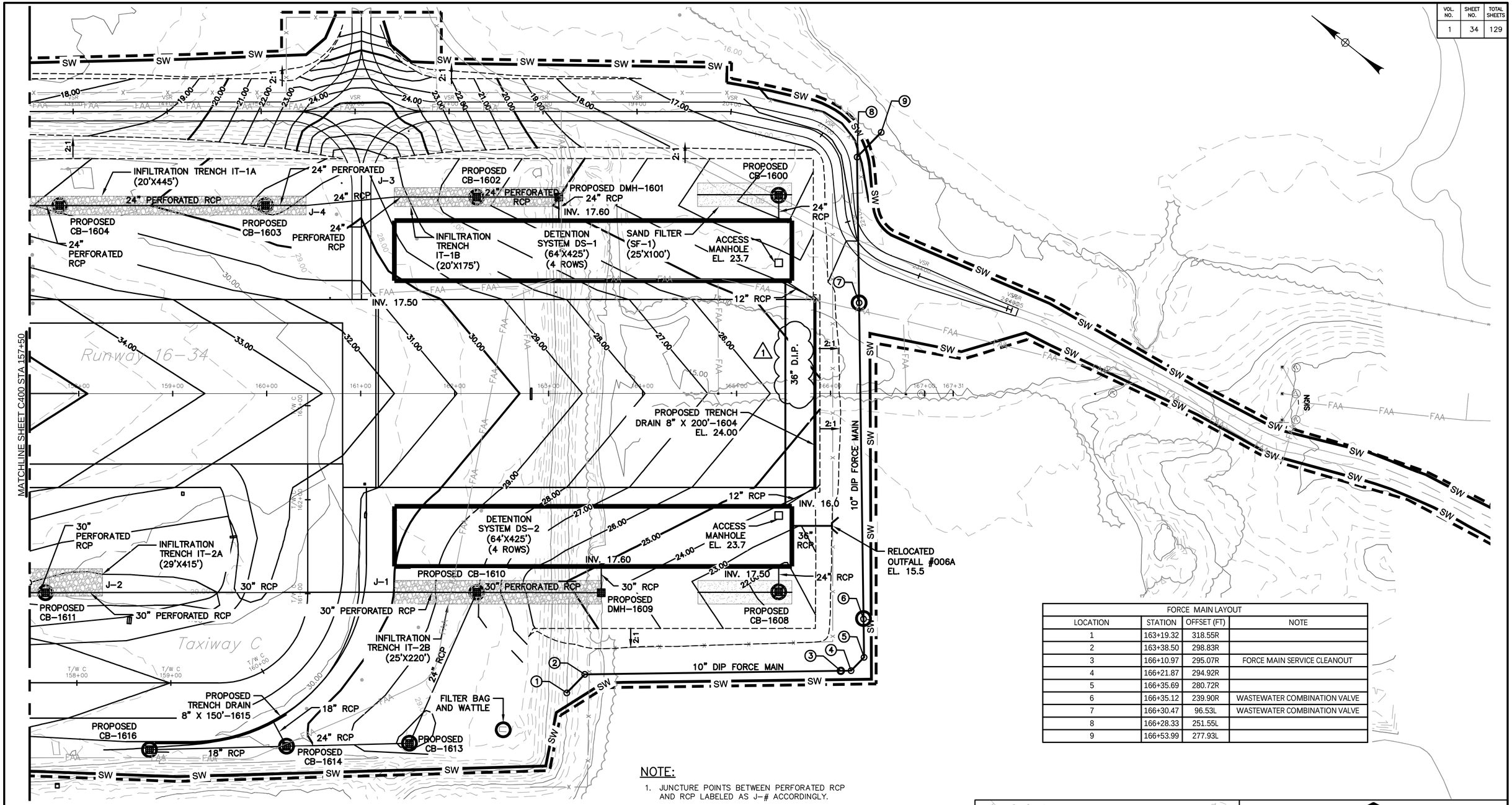

FORCE MAIN LAYOUT			
LOCATION	STATION	OFFSET (FT)	NOTE
1	163+19.32	318.55R	
2	163+38.50	298.83R	
3	166+10.97	295.07R	FORCE MAIN SERVICE CLEANOUT
4	166+21.87	294.92R	
5	166+35.69	280.72R	
6	166+35.12	239.90R	WASTEWATER COMBINATION VALVE
7	166+30.47	96.53L	WASTEWATER COMBINATION VALVE
8	166+28.33	251.55L	
9	166+53.99	277.93L	

NOTE:

1. JUNCTURE POINTS BETWEEN PERFORATED RCP AND RCP LABELED AS J-# ACCORDINGLY.

LEGEND

EXISTING		EXISTING		PROPOSED		PROPOSED	
PAVEMENT		RUNWAY OBJECT FREE AREA	ROFA	GRADING	ELEV.	END WALL	
CONTOUR LINES	ELEV.	LOCALIZER CRITICAL AREA	LCA	LIMIT OF DISTURBANCE		FILTER BAG & WATTLE FOR INLET PROTECTION	
UNDERGROUND ELECTRIC	ue	CATCH BASIN	OR CB OR CB	SEDIMENTATION WATTLE	SW	FILTER BAG	
EXISTING DRAINAGE	d d	MANHOLE	MH OR OR H	TOP/TOE OF SLOPE		100 YEAR FLOODPLAIN	
FAA CABLE	FAA FAA	DRAINAGE MANHOLE	D				
RUNWAY SAFETY AREA	RSA	ELECTRIC MANHOLE	E				

50' 0 50' 100'
GRAPHIC SCALE

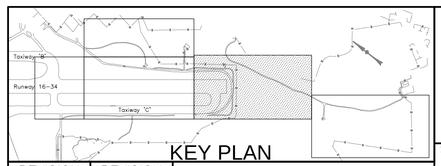

KEY PLAN

REVISION NUMBER	REVISION DATE	DESCRIPTION
1	4/16/14	ADDENDUM NO. 2

Rhode Island Airport Corporation

T.F. GREEN AIRPORT

WARWICK, RHODE ISLAND

SHEET TITLE

GRADING AND DRAINAGE PLAN – SHEET 2

DESIGNED	DRAWN	CHECKED	APPROVED
CAF	NG	LBM	LBM

AECOM

McFarland Johnson
53 REGIONAL DRIVE, CONCORD, NH 03301-5022
Ph: 603-225-2878 FAX: 603-225-0095

PROJECT NO. 24873 (RIAC)

DATE: MARCH 2014

DRAWING NO. C401

STRUCTURE	PIPE		STATION	OFFSET (FT)	RIM EL. (FT)	INV. IN (FT)	INV. OUT (FT)	LENGTH (FT)	SLOPE (FT/FT)	DIAMETER (IN)	MATERIAL	NOTES
	FROM	TO										
DMH-1043	-	-	144+50.27	100.02L	44.40	-	-	-	-	-	MANHOLE	ADJUST/CHANGE GRATE
-	DMH-1043	CB-1061	-	-	-	40.60	39.00	200	0.008	15	RCP	PROPOSED
CB-1061	-	-	144+47.90	99.67R	44.60	-	-	-	-	-	CATCH BASIN	ADJUST
-	CB-1061	CB-1505	-	-	-	39.00	36.45	160	0.015	15	RCP	PROPOSED
CB-1505	-	-	145+53.16	219.72R	41.40	-	-	-	-	-	CATCH BASIN	ADJUST
-	CB-1505	CB-1504	-	-	-	36.45	32.20	294	0.014	18	RCP	PROPOSED
CB-1504	-	-	148+46.84	225.40R	38.60	-	-	-	-	-	CATCH BASIN	ADJUST
-	CB-1504	DMH-1503	-	-	-	32.20	30.40	108	0.017	18	RCP	PROPOSED
DMH-1503	-	-	149+54.89	225.47R	37.50	-	-	-	-	-	MANHOLE	ADJUST
CB-1612	-	-	154+06.20	211.84R	33.35	-	-	-	-	-	CATCH BASIN	PROPOSED
-	CB-1612	CB-1611	-	-	-	27.80	24.60	354	0.009	30	PERFORATED RCP	PROPOSED
CB-1611	-	-	157+64.68	211.97R	30.55	-	-	-	-	-	CATCH BASIN	PROPOSED
-	CB-1611	J-2	-	-	-	24.60	20.61	59	0.012	30	PERFORATED RCP	PROPOSED
-	J-2	J-1	-	-	-	20.61	20.10	313	0.012	30	RCP	PROPOSED
-	J-1	CB-1610	-	-	-	20.10	19.20	87.5	0.010	30	PERFORATED RCP	PROPOSED
CB-1610	-	-	162+23.51	211.50R	28.10	-	-	-	-	-	CATCH BASIN	PROPOSED
-	CB-1610	DMH-1609	-	-	-	19.20	17.90	133	0.010	30	PERFORATED RCP	PROPOSED
DMH-1609	-	-	163+56.01	211.94R	24.60	-	-	-	-	-	MANHOLE	PROPOSED
-	DMH-1609	DS-2	-	-	-	17.90	17.60	28	0.011	30	RCP	PROPOSED
CB-1608	-	-	165+44.86	211.00R	21.75	-	-	-	-	-	CATCH BASIN	PROPOSED
-	CB-1608	DS-2	-	-	-	17.80	17.50	27	0.010	24	RCP	PROPOSED
-	DS-2	OUTFALL 006A	-	-	-	16.00	15.50	38	0.013	36	RCP	PROPOSED
OUTFALL 006A	-	-	165+96.59	140.83R	15.50	-	-	-	-	-	36" OUTFALL	PROPOSED
-	DS-2	DS-1	-	-	-	16.00	16.00	240	0.000	36	DIP	PROPOSED
CB-1605	-	-	155+92.84	200.01	32.25	-	-	-	-	-	CATCH BASIN	PROPOSED
-	CB-1605	CB-1604	-	-	-	27.25	24.80	187	0.013	24	PERFORATED RCP	PROPOSED
CB-1604	-	-	157+79.77	200.03	30.80	-	-	-	-	-	CATCH BASIN	PROPOSED
-	CB-1604	CB-1603	-	-	-	24.80	22.00	219	0.013	24	PERFORATED RCP	PROPOSED
CB-1603	-	-	159+98.82	200.05L	28.70	-	-	-	-	-	CATCH BASIN	PROPOSED
-	CB-1603	J-4	-	-	-	22.00	21.44	43	0.013	24	PERFORATED RCP	PROPOSED
-	J-4	J-3	-	-	-	21.44	20.12	94	0.014	24	RCP	PROPOSED
-	J-3	CB-1602	-	-	-	20.12	19.00	87.5	0.012	24	PERFORATED RCP	PROPOSED
CB-1602	-	-	162+23.46	209.00L	25.00	-	-	-	-	-	CATCH BASIN	PROPOSED
-	CB-1602	DMH-1601	-	-	-	19.00	18.00	87.5	0.012	24	PERFORATED RCP	PROPOSED
DMH-1601	-	-	163+10.96	209.00L	21.75	-	-	-	-	-	MANHOLE	PROPOSED
-	DMH-1601	DS-1	-	-	-	18.00	17.60	28	0.014	24	RCP	PROPOSED
CB-1600	-	-	165+44.86	211.00L	21.75	-	-	-	-	-	CATCH BASIN	PROPOSED
-	CB-1600	DS-1	-	-	-	17.80	17.50	27	0.010	24	RCP	PROPOSED
-	TD-1604	DS-2	-	-	-	16.29	16.00	29	0.010	12	RCP	PROPOSED
-	TD-1604	DS-1	-	-	-	16.41	16.00	41	0.010	12	RCP	PROPOSED
CB-1616	-	-	158+75.29	378.95R	30.90	-	-	-	-	-	CATCH BASIN	PROPOSED
-	CB-1616	CB-1614	-	-	-	23.38	21.90	149	0.010	18	RCP	PROPOSED
CB-1614	-	-	160+21.11	375.33R	30.10	-	-	-	-	-	CATCH BASIN	PROPOSED
-	TD-1615	CB-1614	-	-	-	28.86	27.60	42	0.030	18	RCP	PROPOSED
-	CB-1614	CB-1613	-	-	-	21.90	20.60	134	0.010	24	RCP	PROPOSED
CB-1613	-	-	161+51.95	372.22R	29.90	-	-	-	-	-	CATCH BASIN	PROPOSED
-	CB-1613	CB-1610	-	-	-	20.60	19.20	185	0.008	24	RCP	PROPOSED

1

REVISION NUMBER	REVISION DATE	DESCRIPTION
1	4/16/14	ADDENDUM NO. 2

Rhode Island Airport Corporation

T.F. GREEN AIRPORT

WARWICK, RHODE ISLAND

SHEET TITLE

DRAINAGE SCHEDULE

DESIGNED	DRAWN	CHECKED	APPROVED
CAF	NG	LBM	LBM

AECOM

McFarland Johnson
53 REGIONAL DRIVE, CONCORD, NH 03301-5022
PH: 603-225-2578 FAX: 603-225-0095

PROJECT NO. 24873 (RIAC)

DATE: MARCH 2014

DRAWING NO. C402

VOL. NO.	SHEET NO.	TOTAL SHEETS
1	36	129

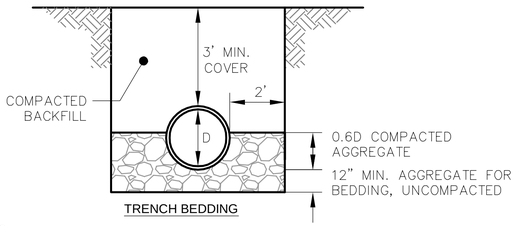

1 C401, C402 PIPE TRENCH BEDDING

NOT TO SCALE

NOTES:

1. ALL UNSUITABLE MATERIAL SHALL BE EXCAVATED TO A MINIMUM DEPTH OF 12 INCHES BELOW THE DESIGN INVERT ELEVATION OR AS DIRECTED BY THE ENGINEER.
2. THE WIDTH OF THE TRENCH SHALL EXTEND 2 FEET BEYOND EACH SIDE OF THE INSIDE DIAMETER OF THE PIPE.
3. COMPACTED BACKFILL SHALL BE PLACED IN LIFTS NO GREATER THAN 8 INCHES THICK.

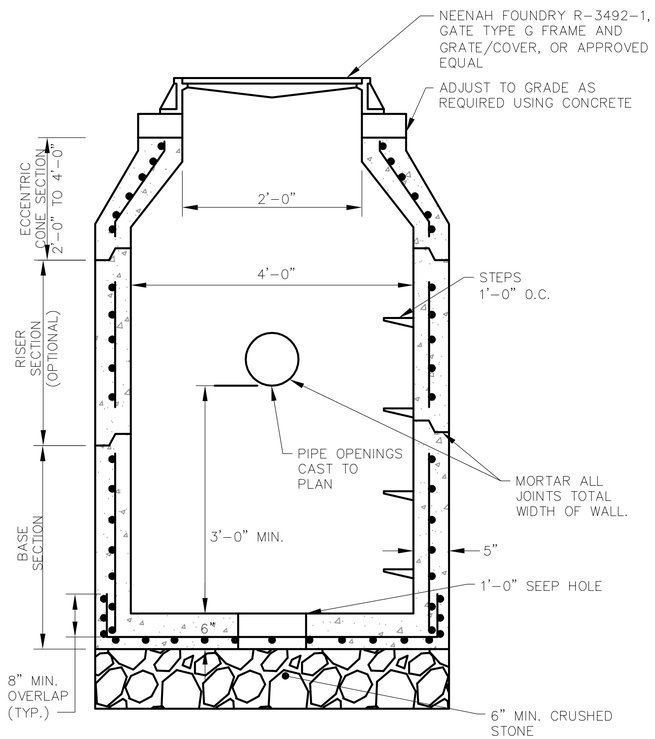

2 C401, C402 PRECAST ROUND CATCH BASIN

NOT TO SCALE

NOTES:

1. CATCH BASIN WITHIN RSA AND TSA SHALL BE AIRCRAFT RATED USING B727 LOAD REQUIREMENTS.
2. CONTRACTOR SHALL SUBMIT SHOP DRAWINGS AND CALCULATIONS WITH RI PE STAMP FOR REVIEW AND APPROVAL.

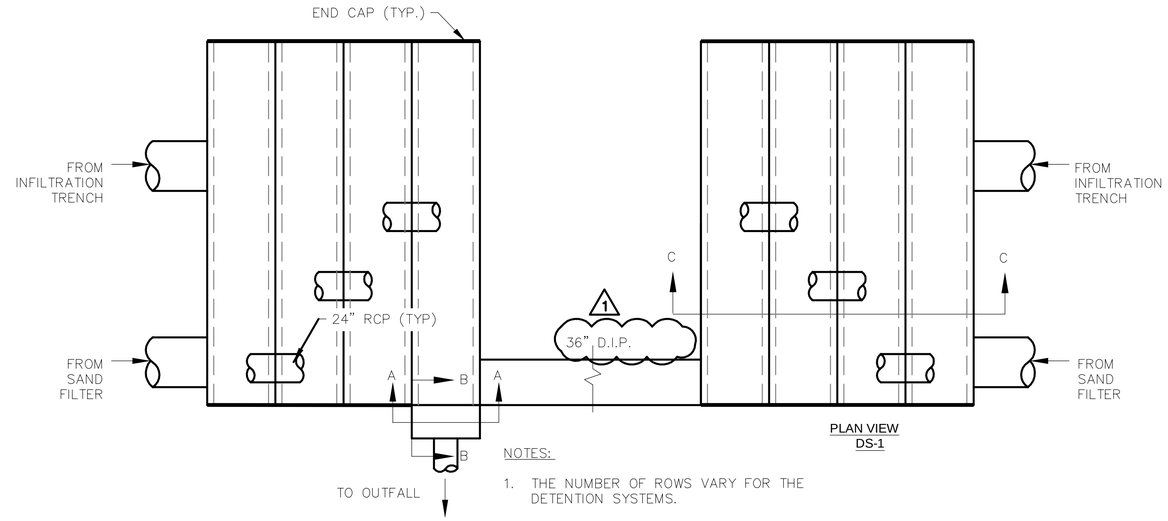

NOTES:

1. THE NUMBER OF ROWS VARY FOR THE DETENTION SYSTEMS.
2. MONITOR BASIN MONTHLY FOR SEDIMENT ACCUMULATION. CLEAN WHEN ACCUMULATION IS GREATER THAN ½".
3. FINAL INSPECTION AND CLEANING SHALL TAKE PLACE AT THE END OF CONSTRUCTION.
4. MINIMUM 18" COVER.

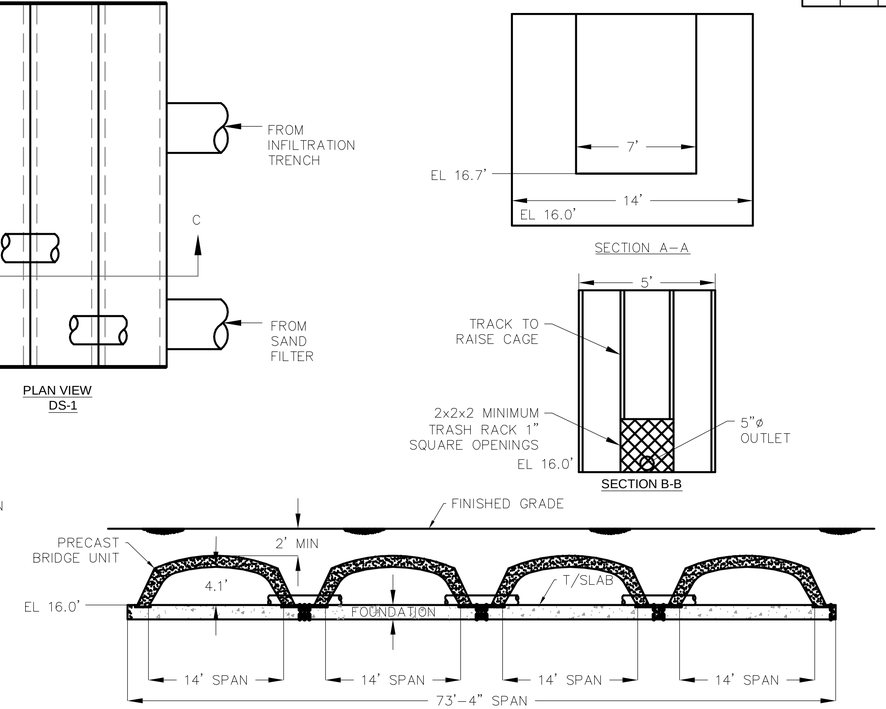

3 C402 GROUNDWATER DETENTION SYSTEM

NOT TO SCALE

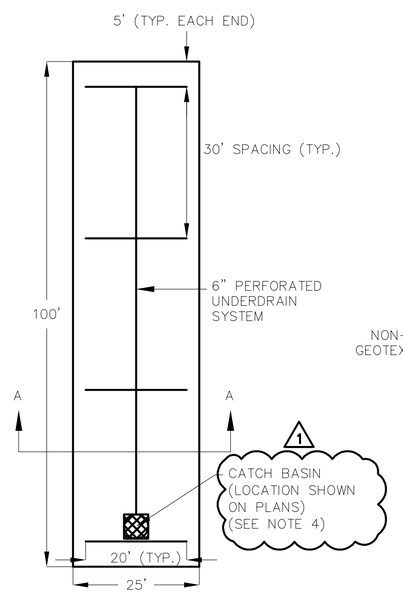

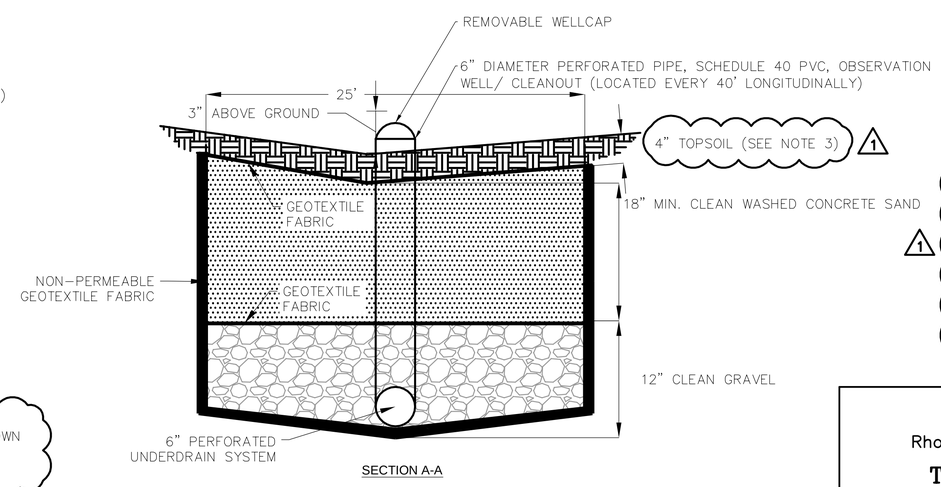

NOTES:

1. CLEAN WASHED CONCRETE SAND SHALL MEET AASHTO STD. M-6 OR ASTM C-33.
2. CLEAN GRAVEL SHALL MEET AASHTO STD. M-43, 0.25" - 0.75" DIAMETER
3. TOPSOIL COVER SHALL BE CHARACTERIZED AS UNCOMPACTED USDA SANDY LOAM SOIL TEXTURE, OR AN AMENDED SOIL TYPE, WITH THE EQUIVALENT OR GREATER INFILTRATION CAPACITY OF 1.02 INCHES/HOUR (1)
4. INLET GRATE ELEVATION TO BE 0.25' ABOVE ADJACENT GROUND SURFACE ELEVATION

4 C402 SAND FILTER (SF-1 AND SF-2)

NOT TO SCALE

REVISION NUMBER	REVISION DATE	DESCRIPTION
1	4/16/14	ADDENDUM NO. 2

Rhode Island Airport Corporation

T.F. GREEN AIRPORT

WARWICK, RHODE ISLAND

SHEET TITLE

DRAINAGE DETAILS – SHEET 1

DESIGNED	DRAWN	CHECKED	APPROVED
CAF	NG	LBM	LBM

AECOM

McFarland Johnson
52 REGIONAL DRIVE, CONCORD, NH 03301-8022
PH: 603-225-2578 FAX: 603-229-0095

PROJECT NO. 24873 (RIAC)

DATE: MARCH 2014

DRAWING NO. C403

VOL. NO.	SHEET NO.	TOTAL SHEETS
1	38	129

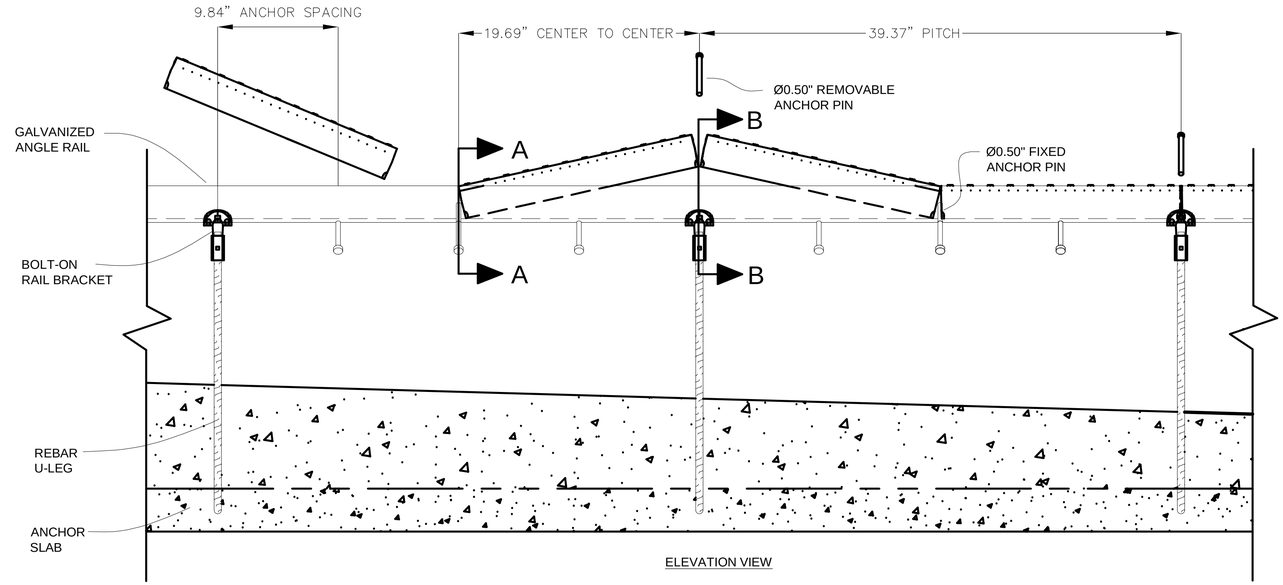

ELEVATION VIEW

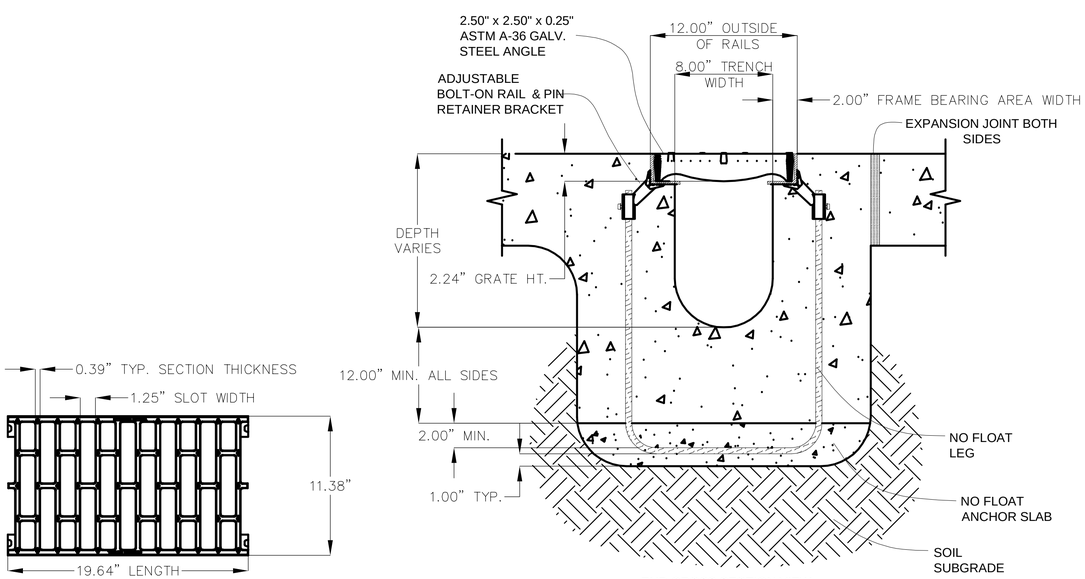

END CROSS SECTION VIEW

GRATE

SECTION - A-A FIXED PIN DETAIL

SECTION - B-B REMOVABLE PIN DETAIL

1 C401, C402 TRENCH DRAIN

NOT TO SCALE

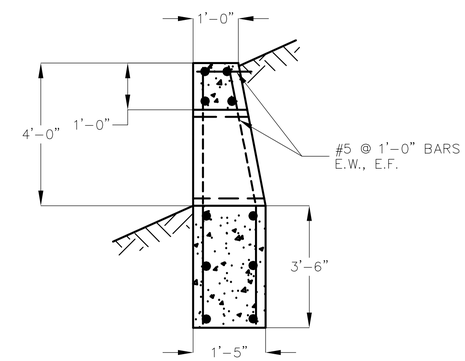

SECTION A-A

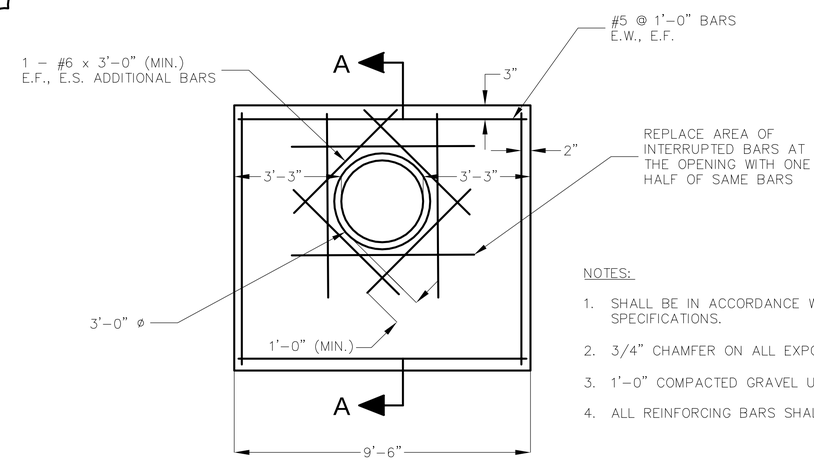

NOTES:

1. SHALL BE IN ACCORDANCE WITH 709 OF THE R.I. STANDARD SPECIFICATIONS.
2. 3/4" CHAMFER ON ALL EXPOSED EDGES.
3. 1'-0" COMPACTED GRAVEL UNDER HEADWALL.
4. ALL REINFORCING BARS SHALL BE EPOXY COATED.

2 C402 RELOCATED OUTFALL #006A

NOT TO SCALE

REVISION NUMBER	REVISION DATE	DESCRIPTION
1	4/16/14	ADDENDUM NO. 2

Rhode Island Airport Corporation

T.F. GREEN AIRPORT

WARWICK, RHODE ISLAND

SHEET TITLE

DRAINAGE DETAILS – SHEET 3

DESIGNED	DRAWN	CHECKED	APPROVED
CAF	NG	LBM	LBM

AECOM

McFarland Johnson

53 REGIONAL DRIVE, CONCORD, NH 03301-8022
PH: 603-225-2878 FAX: 603-225-0095

PROJECT NO. 24873 (RIAC)

DATE: MARCH 2014

DRAWING NO. C405

VOL. NO.	SHEET NO.	TOTAL SHEETS
1	78	129

EROSION & SEDIMENTATION CONTROL SPECIFICATIONS:

1. SOIL EROSION AND SEDIMENT CONTROL MEASURES SHALL BE IN ACCORDANCE WITH "RHODE ISLAND DEPARTMENT OF ENVIRONMENTAL MANAGEMENT's R. I. STORMWATER DESIGN AND INSTALLATION STANDARDS MANUAL, DECEMBER 2010" AND "RHODE ISLAND SOIL EROSION AND SEDIMENTATION CONTROL HANDBOOK". THE CONTRACTOR SHALL HAVE REFERENCE TO THESE MANUALS.

2. RECOGNIZING THAT IMMEDIATE ATTENTION TO EROSION AND SEDIMENTATION CONTROL PRACTICES DRAMATICALLY IMPROVES SOIL AND MOISTURE CONSERVATION AND REDUCES NEGATIVE IMPACTS ON WATER QUALITY. THE CONTRACTOR SHALL GIVE HIGH PRIORITY TO THE DAILY AND TIMELY INSTALLATION OF BOTH TEMPORARY AND PERMANENT EROSION AND SEDIMENT CONTROL MEASURES. IMMEDIATE INSTALLATION OF PRACTICES USUALLY REDUCES LONG TERM COSTS TO THE CONTRACTOR AND PROVIDES BENEFITS TO THE DEVELOPER AND THE PUBLIC GOOD.

3. EROSION CONTROL PRACTICES ARE SHOWN ON THE PLANS WITH RESPECT TO LOCATION AS DETERMINED FROM EXISTING TOPOGRAPHY. CHANGES MAY BE INDICATED IN THE FIELD TO IMPROVE EROSION AND SEDIMENT CONTROL.

4. CONSTRUCTION SHALL PROCEED UNIT BY UNIT TO FACILITATE INSTALLATION OF EROSION CONTROL MEASURES AND THE COMPLETION OF GRADING, SEEDING, AND LANDSCAPING AS SOON AS POSSIBLE WITHIN A UNIT. THIS PROCEDURE SHOULD RESULT IN THE EXPOSURE OF THE SMALLEST PRACTICAL LAND AREA AT ANY ONE TIME.

5. ALL DISTURBED AREAS SHALL HAVE TOPSOIL SPREAD (FOR 4" MINIMUM COMPACTED DEPTH) AND BE TILLED, FERTILIZED AND SEEDED WITH A HYDROSEEDING METHOD HAVING A TACKIFIER OR MULCH INCLUDED IN THE MIXTURE. ANY SLOPES 3:1 (1 RISE ON 3 RUN) AND STEEPER SHALL HAVE EROSION CONTROL MATTING HELD IN PLACE WITH BIODEGRADABLE STAKES OR OTHER APPROVED ENGINEER APPROVED. EACH AREA SHALL BE PREPARED, FERTILIZED AND SEEDED (AND ALSO WITH ANCHORED MATTING IF REQUIRED) WITHIN 14 DAYS OF FINAL GRADING. WHEN PERMANENT SEEDING CANNOT BE INSTALLED BY SEPTEMBER 15, TEMPORARY SEEDING BY A HYDROSEED METHOD OF ALL DISTURBED AREAS SHALL BE INSTALLED IMMEDIATELY AND MAINTAINED IN THAT CONDITION UNTIL PERMANENT PRACTICES CAN BE INSTALLED IN THE FOLLOWING PLANTING SEASON.

6. TEMPORARY STABILIZATION OF DISTURBED AREAS (IF REQUIRED):
   SEEDBED PREPARATION: APPLY LIME 2 TONS/ACRE (100#/1,000 S.F.) VIA A WET METHOD IF REQUIRED BY THE SOIL. FIRM SOIL BY ROLLING OR PACKING. PROVIDE A SLIGHT RAKING TO ALLOW FOR THE SEEDING MIXTURE TO BE ACCEPTED.
   FERTILIZE: UNIFORMLY APPLY NOT LESS THAN 300#/ACRE (7#/1,000 S.F.) OF 10–20–20 OR EQUIVALENT INCLUDED IN THE HYDROSEED MIXTURE.
   SEEDING: SELECT APPROPRIATE SEEDING MIXTURE FROM TABLE 1 BELOW. SPREAD SEED UNIFORMLY USING THE HYDROSEED METHOD.
   STEEP SLOPES (IF REQUIRED): ANCHOR EROSION CONTROL MATTING ON ALL SLOPES 3:1 OR STEEPER AND FLATTER SLOPES SUBJECT TO A SIGNIFICANT MOUNT OF WASH OR WIND BLOWN. USE BIODEGRADABLE MATTING AND ANCHORING METHODS AS APPROVED BY THE ENGINEER.

7. PERMANENT STABILIZATION OF DISTURBED AREAS:
   SEED BED PREPARATION: PROVIDE TOPSOIL (SANDY LOAM, LOAM, OR SILT LOAM), FRIABLE, FREE OF TREE ROOTS, WEEDS, STONES MORE THAN 1–1/2 INCHES IN DIAMETER OR LENGTH SHALL BE PLACED OVER ALL DISTURBED AREAS TO PROVIDE A 4" (MINIMUM) THICK COMPACTED LAYER. TOPSOIL SHALL BE FREE OF HERBICIDES AND TOXIC MATERIALS. UNIFORMLY FIRM THE SOIL BY ROLLING OR PACKING; AND RAKE LIGHTLY TO ALLOW FOR ACCEPTANCE OF THE SEEDS.
   SEED PLACEMENT METHODS: REFER TO PROJECT SPECIFICATIONS FOR DETAILS ABOUT WET (HYDROSEEDING) METHODS. HOWEVER, HYDROSEED METHODS FOR PROVIDING THE FERTILIZER, SEED AND MULCH/TACKIFIER COMPONENTS TOGETHER IS THE ACCEPTABLE METHOD OF PERMANENT STABLIZATION OF THE TOPSOIL MATERIAL FOR THIS PROJECT. IT WOULD BE ACCEPTABLE TO INCLUDE A MATRIX TYPE STABILIZATION COMPONENT FOR FLATTER SLOPES SUBJECT TO WASH OR EXCESSIVE WIND WITHIN THE HYDROSEED METHOD MIXTURE.
   LIME: IF REQUIRED BY TOPSOIL MATERIAL, APPLY LIME AT RATES INDICATED IN TABLE "A" INTO THE LOAM MATERIAL USING A WET METHOD WHICH IS SEPARATE FROM THE HYDROSEEDING MIXTURE.
   FERTILIZER: UNIFORMLY APPLY FERTILIZER AT RATES INDICATED IN TABLE "B" AS PART OF THE HYDROSEEDING MIXTURE OR AT THE RATES AND TYPE RECOMMENDED BY THE SEED SUPPLIER AND APPROVED BY THE ENGINEER.
   SEEDING: SELECT APPROPRIATE SEEDING MIXTURE FROM TABLE "C" BELOW AND APPLY THE SEED AS PART OF THE HYDROSEED METHOD.
   MULCHING/TACKIFIER: AS NOTED ABOVE, THE HYDROSEED MIXTURE SHALL HAVE A MULCH/TACKIFIER PRODUCT WITHIN THE HYDROSEED MIXTURE WHICH IS ACCEPTABLE TO THE ENGINEER.
   SURFACE STABILIZATION: ALTHOUGH NOT ANTICIPATED ON THIS PROJECT, ANCHOR ON ANY SLOPES 3:1 OR STEEPER AND ON FLATTER SLOPES SUBJECT TO INTERMITTENT WASH (I.E. WATERWAYS) OR EXICESSIVE WINDBLOWN AREAS USING A BIODEGRADABLE MATTING AND ANCHORING SYSTEM.

TABLE 1 – TEMPORARY STABLIZATION PLANT SELECTION AND SEEDING RATES

SPECIES	PER ACRE	PER 1000 S.F.	REMARKS
WINTER RYE	2 BU OR 112 LBS.	2.5 LBS.	BEST FOR FALL SEEDING. SEED AUGUST 15 TO SEPTEMBER 15 FOR BEST COVER. SEED TO DEPTH OF ONE INCH.
OATS	2 1/2 BU OR 80 LBS.	2 LBS.	BEST FOR SPRING SEEDINGS. LATER THAN MAY 15 FOR SUMMER PROTECTION. SEED TO DEPTH OF ONE INCH.
ANNUAL RYE	40 LBS.	1 LB.	GROWS QUICKLY. BUT IS OF SHORT GRASS DURATION USE WHERE APPEARANCES ARE IMPORTANT. COVER SEED WITH NO MORE THAN 1/4 INCH OF SOIL. WITH MULCH, SEEDING MAY BE DONE THROUGHOUT GROWING SEASON. OTHERWISE SEED EARLY SPRING OR BETWEEN AUGUST 15 & SEPTEMBER 15.

TABLE "A"–LIME APPLICATION RATES

EXISTING SOIL pH	LIMESTONE TO BE ADDED	
	TONS/ACRE	POUNDS/CY
4.0–4.4	3	12
4.5–4.9	2	8
5.0–5.4	1	4
UNKNOWN	2	8

TABLE "B"–FERTILIZER APPLICATION RATES

PERCENT OF NUTRIENTS		MINIMUM APPLICATION RATE LBS PER 1000 SF
INITIAL	REFERTILIZATION	
10–10–10		20.0
15–15–15		13.4
19–19–19		10.5
	10–3–6	20.0
	12–2–8	16.7
	12–4–8	16.7

TABLE "C" – PERMANENT STABILIZATION SEED MIXTURES & RATES

RHODE ISLAND AIRPORT CORPORATION	POUNDS PER PER ACRE	POUNDS 1,000 S.F.
A. PREDATOR HARD FESCUE	131.25	3.0
SEVEN SEAS CREEPING FESCUE	35	0.8
WILDHORSE KENTUCKY BLUEGRASS	8.75	0.2
	175	4.0

SUPPLIER: PENNINGTON SEED, INC. OR APPROVED EQUAL.

PERMANENT STABILIZATION OF DISTURBED AREAS (CONT.):

8. OTHER SEED MIXTURES AND SEEDING RATES AS RECOMMENDED BY THE USDA – NATURAL RESOURCES CONSERVATION SERVICE, FEDERAL AVIATION ADMINISTRATION, OR RHODE ISLAND AIRPORT CORPORATION MAY BE USED WITH PRIOR WRITTEN PERMISSION FROM THE ENGINEER.

9. TEMPORARY EROSION CONTROL MEASURES SHALL NOT BE REMOVED UNTIL ALL DISTURBED AREAS HAVE BEEN STABILIZED.

10. MAINTENANCE: DURING THE CONSTRUCTION PERIOD AND UNTIL SUCH TIME AS THE LONG TERM VEGETATION IS ESTABLISHED TO A 70% VEGETATIVE STAND, THE FOLLOWING ITEMS MUST BE PERFORMED BY THE CONTRACTOR:
    A. DISTURBED AREAS WILL BE FERTILIZED AND RESEEDED.
    B. CATCH BASINS AND FILTER BAGS WILL BE CHECKED AND CLEANED AS NECESSARY.
    C. DRAINAGE OR GRASS TREATMENT SWALES SHALL BE CHECKED FREQUENTLY AND CLEANED AS REQUIRED.
    D. ANY SILT FENCES AND EROSION CONTROL WATTLES WILL BE CHECKED ON A REGULAR BASIS AND REPAIRED AS NECESSARY TO CORRECT ANY DAMAGE, DETERIORATION, AND SHORT–CIRCUITING.

11. REFER TO "GRADING PLANS" FOR THIS PROJECT PRIOR TO ANY SITE DISTURBANCE.

12. INSPECTIONS: IN ACCORDANCE WITH THE STORMWATER POLLUTION PREVENTION PLAN (SWPPP) THAT THE CONTRACTOR MUST SIGN, THE ENGINEER SHALL BE CONTACTED ON A REGULAR BASIS TO INSPECT ALL EROSION & SEDIMENTATION CONTROL PRACTICES, AS WELL AS MONITOR THE MAINTENANCE OF THE EROSION & SEDIMENTATION CONTROL COMPONENTS. REFER TO CONSTRUCTION SPECIFICATIONS AND SWPPP FOR ADDITIONAL REQUIREMENTS. THE CONTRACTOR SHALL ENSURE ALL EROSION & SEDIMENTATION CONTROL PRACTICES SHALL BE IN STRICT ACCORDANCE WITH THE APPROVED PLANS AND SPECIFICATIONS.

13. FOR SPECIAL WINTER CONSTRUCTION CONSIDERATIONS, THE CONTRACTOR SHALL REFER TO THE "RHODE ISLAND DEPARTMENT OF ENVIRONMENTAL MANAGEMENT'S R. I. STORMWATER DESIGN AND INSTALLATION STANDARDS MANUAL".

14. THE MAXIMUM AMOUNT OF AREA TO BE DISTURBED AND UNSTABLIZED SHALL BE 9 ACRES AT ANY ONE TIME.

15. THE MAXIMUM AMOUNT OF TIME ANY AREA MAY BE DISTURBED WITHOUT STABILIZATION SHALL BE 14 DAYS.

16. BEFORE THE START OF THE CONSTRUCTION, QUALIFYING IMPERVIOUS AREAS (QPAs) AND INFILTRATION AREAS MUST BE IDENTIFIED WITH SIGNAGE AND FENCED. HEAVY EQUIPMENT AND TRAFFIC SHALL BE RESTRICTED FROM TRAVELING OVER THE QPAs AND INFILTRATION AREAS TO MINIMIZE COMPACTION OF THE SOIL. LIGHTER WEIGHT EQUIPMENT AND CONSTRUCTION TECHNIQUES THAT MINIMIZE COMPACTION MAY BE USED IN THESE AREAS. IF QPAs OR INFILTRATION AREAS BECOME COMPACTED, THE SOIL MUST BE SUITABLY AMENDED, TILLED, AND RE–VEGETATED ONCE CONSTRUCTION IS COMPLETE TO RESTORE THE DESIGN INFILTRATION CAPACITY.

17. INFILTRATION PRACTICES AND SEDIMENT FILTERS SHALL NEVER SERVE AS A SEDIMENT CONTROL DEVICE DURING SITE CONSTRUCTION PHASE. UPSTREAM CONSTRUCTION SHALL BE COMPLETED AND STABILIZED BEFORE CONNECTION TO A DOWNSTREAM INFILTRATION OR FILTRATION BMP. AFTER CONSTRUCTION OF THE INFILTRATION OR FILTRATION BMP, STRAW WATTLES SHALL BE PLACED AROUND ALL INLETS. A DENSE AND VIGOROUS VEGETATIVE COVER SHALL BE ESTABLISHED OVER THE CONTRIBUTING PERVIOUS DRAINAGE AREAS BEFORE RUNOFF CAN BE ACCEPTED INTO THE BMP. INSPECTION SHOULD BE MADE AFTER EACH STORM EVENT AND REPAIR OR REPLACEMENT SHOULD BE MADE PROMPTLY AS NEEDED.

CONSTRUCTION SEQUENCE:

1. INSTALL SEDIMENTATION SACKS AT ALL EXISTING CATCH BASIN LOCATIONS INDICATED ON PLAN OR AT OTHER LOCATIONS AS DETERMINED BY ENGINEER. INSTALL OTHER TEMPORARY AND PERMANENT EROSION AND SEDIMENT CONTROL MEASURES AS EARTHWORK PROCEEDS OR DIRECTED BY THE ENGINEER.

2. MILL EXISTING BITUMINOUS PAVEMENT AND REMOVE EXISTING PAVEMENT MATERIALS TO THE LIMITS SHOWN ON THE PLANS. THE CONTRACTOR SHALL LEGALLY DISPOSE OF ALL DEMOLITION MATERIALS OFFSITE.

3. STRIP AND STOCKPILE TOPSOIL FROM THE EDGES OF NEW WORK (AS NECESSARY) AND INSTALL ADDITIONAL ASSOCIATED EROSION & SEDIMENTATION CONTROL MEASURES AROUND THE STOCKPILE, I.E., SILT FENCE OR WATTLES, AS REQUIRED OR DIRECTED BY THE ENGINEER AT NO ADDITIONAL COST TO THE OWNER.

4. CONSTRUCT NEW RUNWAY SAFETY AREA BY EXCAVATING EXISTING SUBGRADE MATERIALS AS NECESSARY TO OBTAIN THE PROPER GRADES AND LEGALLY DISPOSE OF THE SPOILS OFFSITE AS REQUIRED.

5. INSTALL NEW BASE MATERIALS, REPLACEMENT OF ELECTRICAL SYSTEMS, AND FINALLY PLACE THE BITUMINOUS PAVEMENT.

6. PREPARE THE AREAS ALONG THE EDGES OF NEW WORK TO RECEIVE NEW LOAM. PLACE TOPSOIL, LIME, AND HYDROSEED MIXTURE ON THESE PREPARED AREAS IMMEDIATELY AFTER PAVING.

7. INSPECT ALL DISTURBED AREAS ON A DAILY BASIS. FOLLOWING THIS DAILY INSPECTION, INSTALL ADDITIONAL EROSION AND SEDIMENTATION CONTROL DEVICES AS REQUIRED. ALL TEMPORARY DRAINAGE, EROSION, AND SEDIMENT CONTROL PRACTICES AS NECESSARY, I.E., DIVERSION CHANNELS, BERMS, DRAINS, DITCHES, STONE DIKES, FILTER BAGS, TEMPORARY SEED, OR OTHER PRACTICES ARE TO BE INSTALLED AS RECOMMENDED AND SPECIFIED IN THE "RHODE ISLAND DEPARTMENT OF ENVIRONMENTAL MANAGEMENT's R. I. STORMWATER DESIGN AND INSTALLATION STANDARDS MANUAL".

8. CLEAN ALL DRAINAGE PIPES AND CATCH BASINS WITHIN THE LIMITS OF WORK AS SHOWN ON THE PLANS OR DIRECTED BY THE ENGINEER AFTER THE SITE HAS BEEN STABILIZED. REFER TO THE PROJECT PHASING FOR THE TIMING OF THE WORK. PROPERLY DISPOSE OF ALL SPOIL MATERIALS OFF SITE.

9. REMOVE OTHER EROSION CONTROL PRACTICES ON A TIMELY BASIS AS PERMANENT MEASURES TAKE HOLD. SPOT RE–FERTILIZE AND RE–SEED AS REQUIRED.

10. DURING THE CONSTRUCTION WORK, IN ADDITION TO THE DAILY INSPECTIONS FOR ADDITIONAL DEVICES, THE CONTRACTOR SHALL INSPECT ALL EXISTING DEVICES AND MAINTAIN GRADING, EROSION CONTROL AND SEDIMENT CONTROL PRACTICES ON A WEEKLY BASIS AND IMMEDIATELY WITHIN 24 HOURS OF ALL STORMS PRODUCING RAINFALL OF 0.25" OR GREATER TO ENSURE PROPER CONTROL OF THE WORK SITE IN ACCORDANCE WITH THE SWPPP.

11. REFER TO PLANS IN THIS SET FOR ADDITIONAL DETAILS RELATIVE TO THE REQUIRED CONSTRUCTION SEQUENCE. MAINTENANCE OF ALL EROSION CONTROL COMPONENTS SHALL BE AN ONGOING PRACTICE AND IN STRICT ACCORDANCE WITH THE APPROVED PLAN AT SHALL BE PERFORMED AT NO ADDITIONAL COST TO THE OWNER.

REVISION NUMBER	REVISION DATE	DESCRIPTION
1	4/16/14	ADDENDUM NO. 2

Rhode Island Airport Corporation

T.F. GREEN AIRPORT

WARWICK, RHODE ISLAND

SHEET TITLE

EROSION CONTROL NOTES

DESIGNED	DRAWN	CHECKED	APPROVED
CAF	NG	LBM	LBM

AECOM

McFarland Johnson
53 REGIONAL DRIVE, CONCORD, NH 03301-8022
PH: 603-225-2878 FAX: 603-225-9085

PROJECT NO. 24873 (RIAC)

DATE: MARCH 2014

DRAWING NO. ES001

VOLUME NO.	SHEET NO.	TOTAL SHEETS
2	9	72

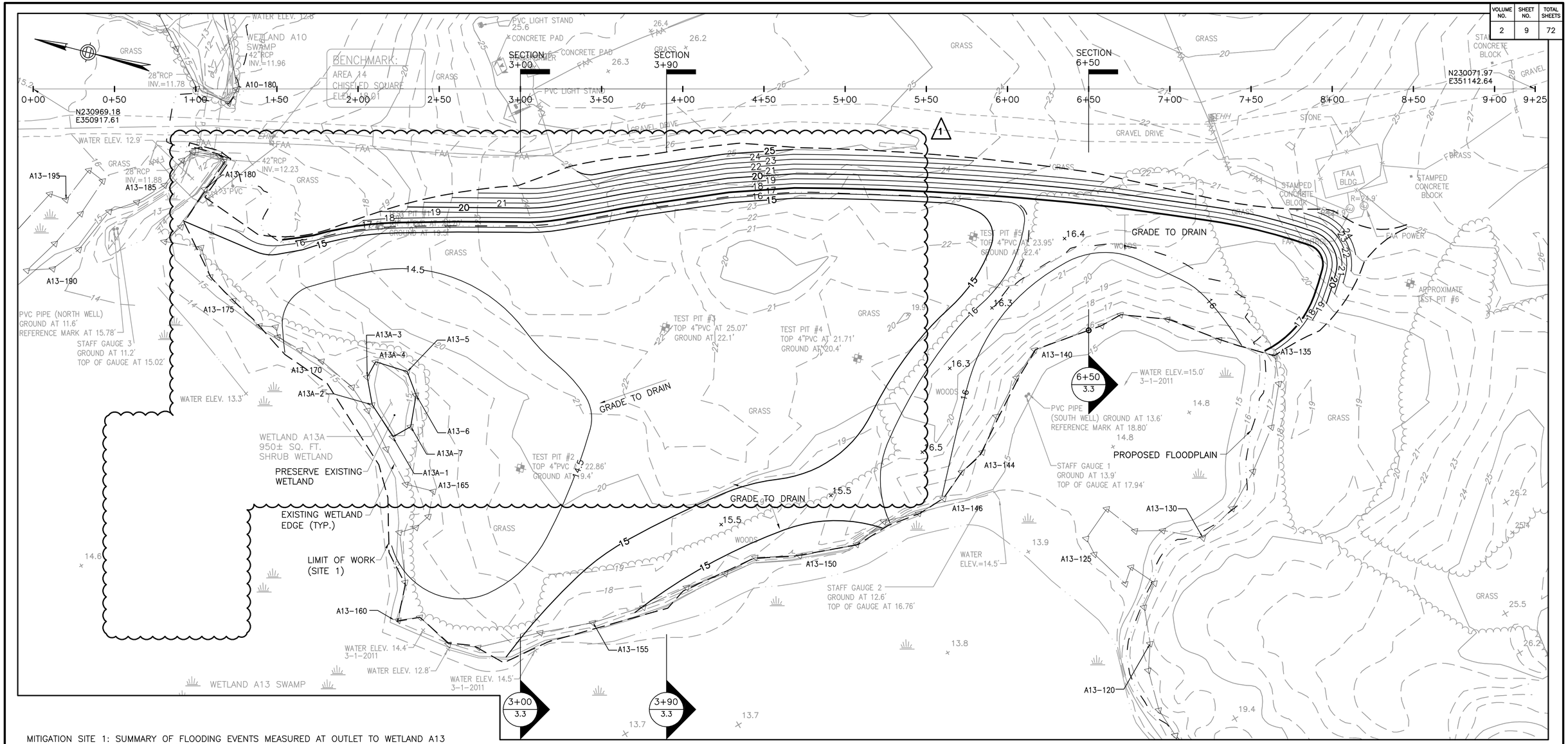

MITIGATION SITE 1: SUMMARY OF FLOODING EVENTS MEASURED AT OUTLET TO WETLAND A13
MARCH 17, 2011 TO JANUARY 13, 2012

ELEVATION (NAVD 88)	NUMBER OF EVENTS EXCEEDING ELEVATION	LONGEST DURATION (HOURS)	NO. OF EVENTS WITH DURATION EXCEEDING			AVERAGE DURATION (HOURS)	TOTAL HOURS	PERCENT OF MONITORING PERIOD
			12 HR	24 HR	36 HR			
ABOVE 14.0 FT	34	29.0	5	3	0	7.5	253.5	3.5
ABOVE 14.5 FT	23	13.8	1	0	0	4.9	113.5	1.6
ABOVE 15.0 FT	13	6.0	0	0	0	3.2	41.5	0.6

WETLAND MITIGATION SITE 1 GROUNDWATER MONITORING DATA (FEET ABOVE NAVD 88)

T.P. NO.	10/27/10	12/16/10	3/22/11	3/29/11	4/29/11	5/26/11	9/15/11	11/14/11	1/13/12
1	14.2	14.6	13.3	12.8	14.0	14.1	14.5	14.8	14.5
2	14.4	14.8	14.1	13.7	14.4	14.5	14.7	14.9	14.9
3	<15.2	<15.2	<15.2	<15.2	<15.2	<15.2	<15.2	<15.2	<15.2
4	14.4	14.9	13.5	13.0	14.2	14.3	14.8	15.1	15.0
5	14.5	15.0	14.2	<14.0	14.2	14.3	14.9	15.2	15.1

GRADING AND GEOMETRY PLAN

SCALE: 1" = 30'

LEGEND

EXISTING		PROPOSED	
CONTOUR LINES	21	CONTOUR LINES	24 25
FAA CABLE	FAA FAA	LIMIT OF WORK	
DRAINAGE	d d	PROPOSED FLOODPLAIN	
WETLAND EDGE	AXX-X	FLOW DIRECTION	
EDGE OF GRAVEL DRIVE		SPOT GRADE	15.5
SPOT GRADE	14.6		
ELECTRIC MANHOLE	E		
TEST PIT	TP#14-2 EL.=17.0		
FLOW DIRECTION			
WETLAND AREA			

1

NOTE:
FOR EROSION CONTROL, SEE DWG 3.4

THOMAS R. CABANA
No. 5827
REGISTERED PROFESSIONAL ENGINEER

GRAPHIC SCALE
30 0 30 60
(IN FEET)
1" = 30'

REVISION NUMBER	REVISION DATE	DESCRIPTION
1	3/31/14	REMOVE UNDERDRAIN

Rhode Island Airport Corporation
T.F. GREEN AIRPORT
WARWICK, RHODE ISLAND

SHEET TITLE
SITE 1 GRADING AND GEOMETRY PLAN

DESIGNED	DRAWN	CHECKED	APPROVED
RMC	BR	SJF	DMC

JACOBS
166 Valley Street
Building 64, Suite 101
Providence, RI 02909

VHB
Vanasse Hangen Brustlin, Inc.

PROJECT NO. 24873 (RIAC)
DATE: MARCH 2014
DRAWING 3.2

FILE NAME: M:\RIAC - TF Green EIS - Task Order 25\CAD\ 3.2 Site 1 Grading and Geometry.dwg
PLOT DATE: Apr 14, 2014 - 3:02pm

VOLUME NO.	SHEET NO.	TOTAL SHEETS
2	10	72

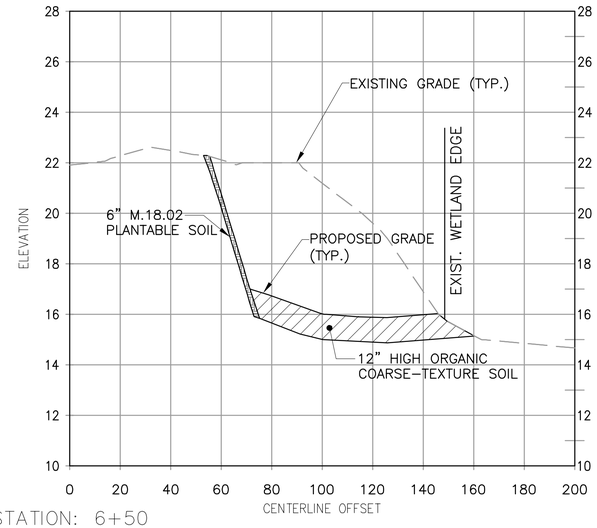

STATION: 6+50

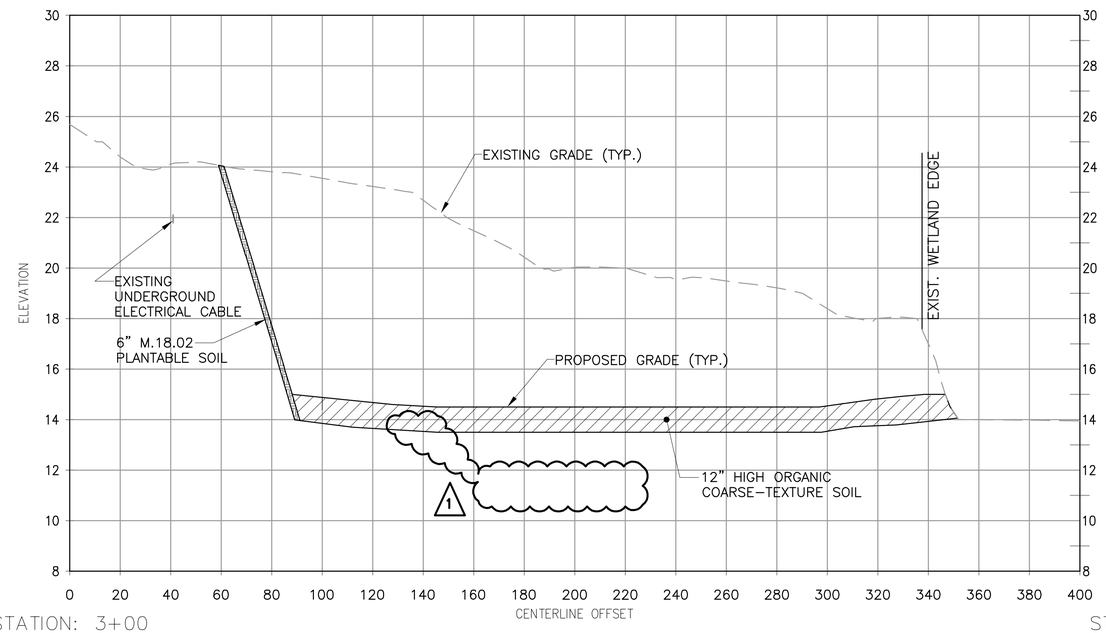

STATION: 3+00

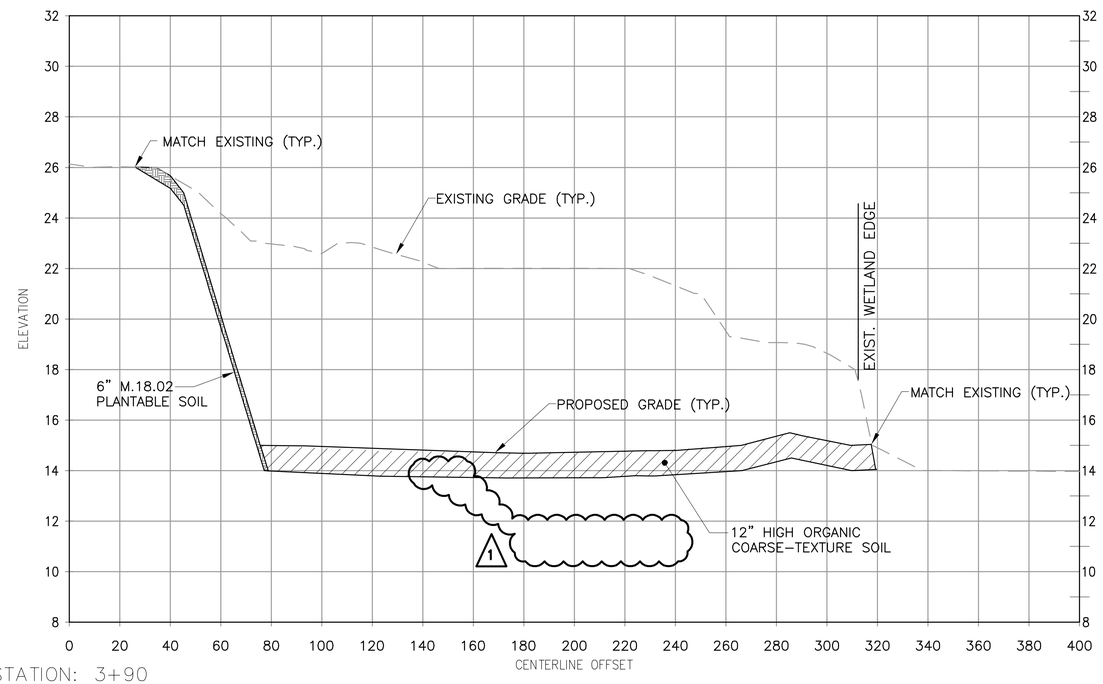

STATION: 3+90

CROSS SECTIONS

SCALE: AS NOTED

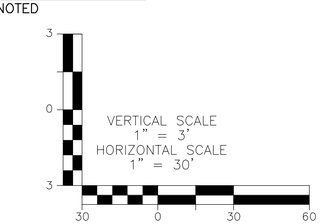

THOMAS R. CABANA
STATE OF RHODE ISLAND
No. 5827
REGISTERED
PROFESSIONAL ENGINEER

REVISION NUMBER	REVISION DATE	DESCRIPTION
1	3/31/14	REMOVE UNDERDRAIN

Rhode Island Airport Corporation

T.F. GREEN AIRPORT

WARWICK, RHODE ISLAND

SHEET TITLE

SITE 1 CROSS SECTIONS

DESIGNED	DRAWN	CHECKED	APPROVED
RMC	BR	SJF	DMC

JACOBS
166 Valley Street
Building 6A, Suite 101
Providence, RI 02909

VHB
Vanasse Hangen Brustlin, Inc.

PROJECT NO. 24873 (RIAC)

DATE: MARCH 2014

DRAWING 3.3

FILE NAME: M:\RIAC - TF Green EIS - Task Order 25\CAD\ 3.3 Site 1 Sections.dwg
PLOT DATE: Apr 14, 2014 - 3:29pm

VOLUME NO.	SHEET NO.	TOTAL SHEETS
2	12	72

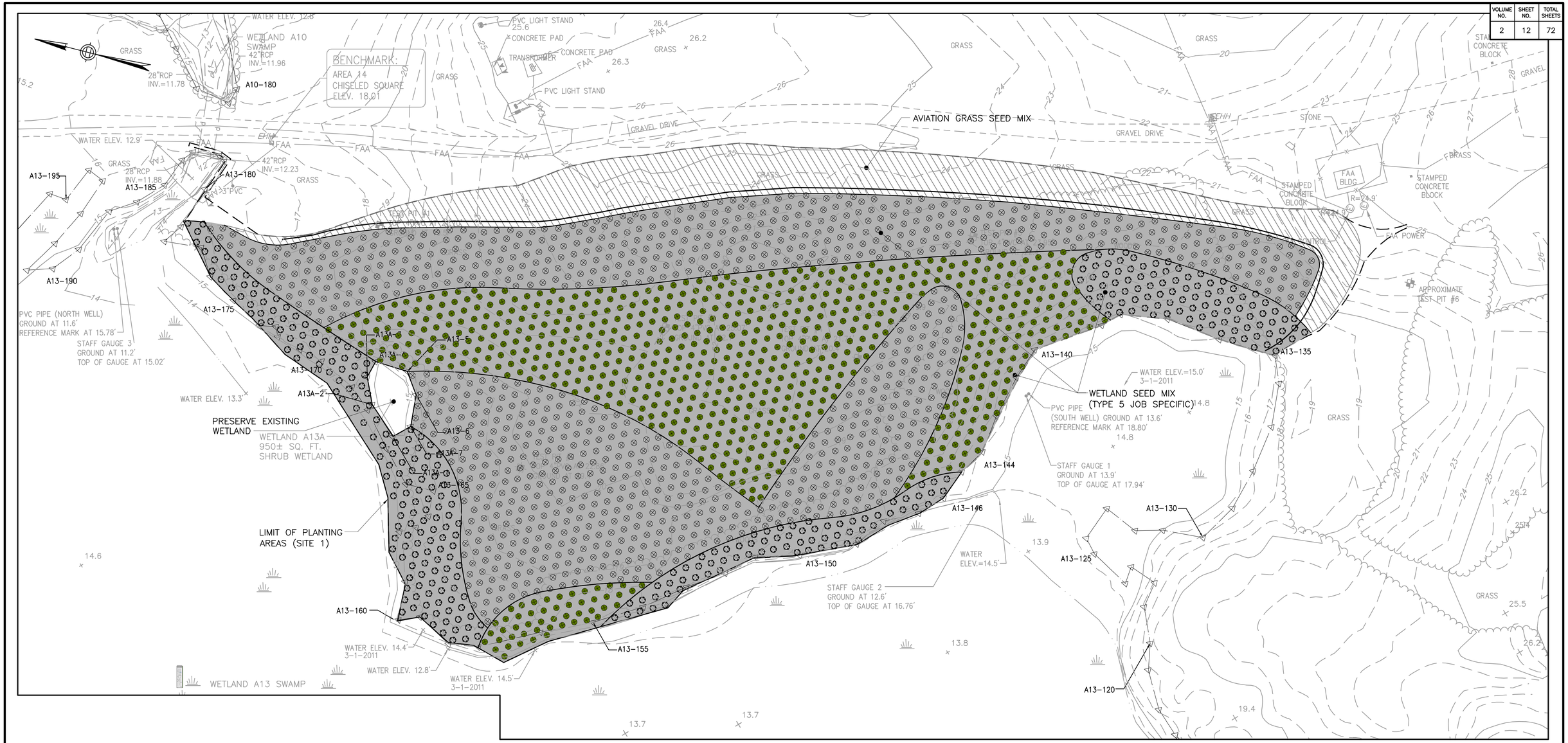

PLANTING PLAN

SCALE: 1" = 30'

LEGEND

EXISTING		PROPOSED	
CONTOUR LINES	21	LIMIT OF PLANTING AREAS	
FAA CABLE	FAA FAA	LIMIT OF WORK	
DRAINAGE	d d		
WETLAND EDGE	AXX-X		
EDGE OF GRAVEL DRIVE			
TREELINE			
SPOT GRADE	14.6		
ELECTRIC MANHOLE	E		
ELECTRIC HANDHOLE	EHH		
WETLAND AREA			

SEEDING LEGEND

WETLAND SEED MIX (TYPE 5 JOB SPECIFIC)

AVIATION GRASS SEED MIX

NOTES:

1. FOR PLANTING NOTES AND DETAILS REFER TO DWG 6.4
2. PLANTING LAYOUT SHALL BE APPROVED BY THE ENGINEER PRIOR TO FINAL PLANTING.

GRAPHIC SCALE

30 0 30 60

(IN FEET)
1" = 30'

1

ACCEPTABLE PLANT LIST

QTY.	KEY	COMMON NAME	SYMBOL	BOTANICAL NAME	SIZE
WETLAND SHRUBS					
1071		SWEET PEPPERBUSH	⊕	CLETHRA ALNIFOLIA	2'-3' HT.
735		ALDER	●	ALNUS RUGOSA	2'-3' HT.
343		PUSSY WILLOW	✪	SALIX DISCOLOR	2'-3' HT.

REVISION NUMBER	REVISION DATE	DESCRIPTION
1	3/31/14	REMOVE UNDERDRAIN

Rhode Island Airport Corporation

T.F. GREEN AIRPORT

WARWICK, RHODE ISLAND

SHEET TITLE

SITE 1 PLANTING PLAN

DESIGNED	DRAWN	CHECKED	APPROVED
RMC	BR	SJF	DMC

JACOBS
165 Valley Street
Building 64, Suite 101
Providence, RI 02909

VHB Vanasse Hangen Brustlin, Inc.

PROJECT NO. 24873 (RIAC)

DATE: MARCH 2014

DRAWING 3.5

FILE NAME: M:\RIAC - TF Green EIS - Task Order 25\CAD\ 3.5 Site 1 Planting Plan.dwg
PLOT DATE: Apr 14, 2014 - 3:26pm

VOLUME NO.	SHEET NO.	TOTAL SHEETS
2	71	72

1

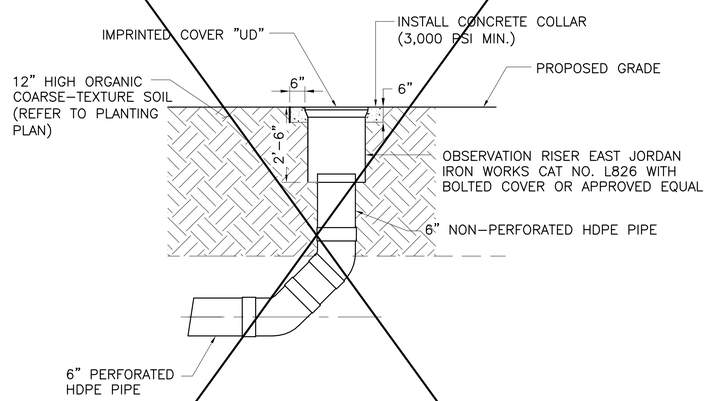

OBSERVATION RISER DETAIL

NOT TO SCALE

N.I.C.

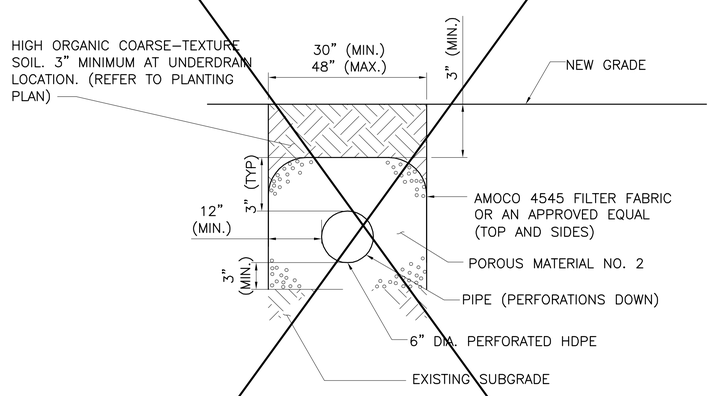

UNDERDRAIN DETAIL

NOT TO SCALE

N.I.C.

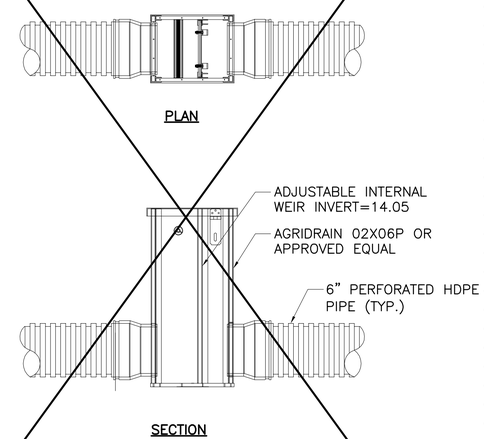

UNDERDRAIN CONTROL BOX

NOT TO SCALE

N.I.C.

REVISION NUMBER	REVISION DATE	DESCRIPTION
1	3/31/14	REMOVE UNDERDRAIN

Rhode Island Airport Corporation

T.F. GREEN AIRPORT

WARWICK, RHODE ISLAND

SHEET TITLE

DRAINAGE DETAILS

DESIGNED	DRAWN	CHECKED	APPROVED
RMC	BR	SJF	DMC

JACOBS
145 Valley Street
Building Six, Suite 101
Providence, RI 02909

VHB
Vanasse Hangen Brustlin, Inc.

PROJECT NO. 24873 (RIAC)

DATE: MARCH 2014

DRAWING 8.4

FILE NAME: M:\RIAC – TF Green EIS – Task Order 25\CAD\ 8.4 Drain Details.dwg
PLOT DATE: Apr 14, 2014 – 3:35pm