COMMUNITY COLLEGE
OF RHODE ISLAND

Purchasing Office

BID/PROPOSAL

DATE: _____

COMMODITY:
_____

PUBLIC BID NO. _____ FORMAL BID NO. _____ RFP NO. _____

DATE & TIME BID TO BE RECEIVED
IN CCRI PURCHASING OFFICE: _____

PRE-BID/PROPOSAL CONFERENCE DATE: _____ TIME: _____

LOCATION: _____

SURETY REQUIRED: _____ NO SURETY REQUIRED: _____

PLEASE COMPLETE THE ATTACHED W-9 AND SUBMIT WITH THIS COVER SHEET AND ATTACHED BID.

CCRI VENDOR ID: _____ FEIN: _____

COMPANY NAME: _____

STREET AND NUMBER: _____

CITY, STATE & ZIP CODE: _____

ORDERING E-MAIL ADDRESS: _____

No offer will be considered that is not accompanied by the attached two-page Community College of RI Bidder Certification Form/Contract Offer completed and signed by the offeror.

_____ _____
Print Name and Title Telephone Number/E-Mail Address

_____ _____
Signature Date

Knight Campus • 400 East Avenue, Warwick, Rhode Island 02886-1807 • (401) 825-2196 • Fax: (401) 825-2328

Community College of Rhode Island Bidder Certification Form/Contract Offer

NOTICE TO OFFERORS

This two-page Community College of Rhode Island (CCRI) Bidder Certification Form/Contract Offer **must** be attached to the front of the offer and shall be considered an integral part of each offer made by a vendor to enter into a contract with CCRI. As such, submittal of the entire Community College of Rhode Island Bidder Certification Form/Contract Offer, signed by a duly authorized representative of the offeror attesting to the accuracy of the information provided and the offer extended, is a mandatory part of any contract award. Offers received without the entire completed two-page form attached may result in offer disqualification.

Other Provisions and Procedures

To assure maximum access opportunities for users, public bid/RFP notices shall be posted on the Rhode Island Division of Purchases Website (www.purchasing.ri.gov/) for a minimum of seven days and no amendments shall be made within the last five days before the date an offer is due.

Offers are irrevocable for sixty (60) days from the opening date (or such other extended period set forth in the solicitation), and may not be withdrawn, except with the express permission of the College Purchasing Agent. All pricing will be considered to be firm and fixed unless otherwise indicated. All offers must define delivery dates for all items; if no delivery date is specified, it is assumed that immediate delivery from stock will be made. After an award has been made, failure to meet all requirements of this invitation may result in a determination of default. Payments for partial delivery will not be made, except where expressly provided herein.

Unless specified "no substitute," product offerings equivalent in quality and performance will be considered (at the sole option of the College) on the condition that the offer is accompanied by detailed product specifications.

The College reserves the right to (a) make awards on the basis that best serves the interest of CCRI, individual items, total low, etc., and (b) reject any and all bids in whole or in part. Prices quoted are N30, FOB DESTINATION, less federal/state tax.

VENDOR AUTHORIZATION TO PROCEED. When a purchase order or change order is issued by the Community College of Rhode Island, no claim for payment for services rendered or goods delivered contrary to or in excess of the contract terms and scope shall be considered valid unless the vendor has obtained a written change order issued by the Community College of Rhode Island PRIOR TO delivery.

Any offer, whether in response to a solicitation for proposals or bids, or made without a solicitation, which is accepted in the form of a purchase order made in writing by the Purchasing Agent, or a state official with purchasing authority delegated by the Purchasing Agent, shall be considered a binding contract.

Where bid surety is required, bidder must furnish a bid bond or certified check for 5% of the bid total with the bid, or for such other amount as may be specified. Where indicated, successful bidder must furnish a 100% performance bond and labor and payment bond for contracts subject to Title 37 Chapters 12 and 13 of the Rhode Island General Laws. All bonds must be furnished by a surety company authorized to conduct business in the State of Rhode Island.

This solicitation and any contract or purchase order arising from it is issued in accordance with the specific requirements described herein, and the State's Purchasing Laws and Regulations and other applicable State Laws, including the Board of Governors for Higher Education General Terms and Conditions of Purchase. The regulations, General Terms and Conditions are incorporated into all Community College of Rhode Island contracts and can be viewed at www.ribghe.org/procurementregs113006.pdf.

Offerors are advised that all materials submitted to the College for consideration in response to this solicitation will be considered without exception to be Public Records pursuant to Title 38 Chapter 2 of the Rhode Island General Laws, and will be released for inspection upon written request once an award has been made. Bidders are encouraged to attend Public Bid Openings to obtain competitive pricing information. Bid tabulations may be reviewed after award(s) have been made at the Community College of Rhode Island Purchasing Office Mondays through Fridays between the hours of 9:00 a.m. and 3:30 p.m. – telephone requests for bid results will not be honored.

Provisions of State labor laws concerning payment of prevailing wage rates, issued by the R.I. Department of Labor and Training, shall apply for contracts involving public works construction, alteration, or building repair work.

In accordance with Title 7 Chapter 1.1-99 of the Rhode Island General Laws, foreign corporations (a corporation established other than in Rhode Island) must be qualified to transact business in this state.

State Equal Employment Opportunity Compliance certificate and agreement procedures will apply to all awards for supplies or services valued at $10,000 and more. Minority Business Enterprise policies and procedures, including subcontracting opportunities as described in Title 37 Chapter 14.1 of the Rhode Island General Laws, also apply.

ALL CONTRACT AWARDS ARE SUBJECT TO THE FOLLOWING DISCLOSURES & CERTIFICATIONS
Offerors must respond to every disclosure statement. A person authorized to enter into contracts must sign the offer and attest to the accuracy of all statements. Incomplete certification forms are grounds for disqualification of offer.

Indicate Yes (Y) or No (N):

____1 Has your firm (or any principal) been subject to the following findings by the Federal Government, State of Rhode Island or any other jurisdiction? Suspension, Debarment, Indictment, Criminal Conviction. CIRCLE APPROPRIATE ITEM (S).

____2 Has your firm (or any principal) been fined more than $5000 for a single violation by the Rhode Island Department of Environmental Management for violation of Rhode Island Wetlands law?

____3 I/we certify that I/we will immediately disclose, in writing, to the College Purchasing Agent any potential conflict of interest which may occur during the course of the engagement authorized pursuant to this contract.

____4 I/we acknowledge that, in accordance with (1) RIGL Section 37-2-54(C) "no purchase or contract shall be binding on the state or any agency thereof unless approved by the Department [of Administration] or made under general regulations which the Chief Purchasing Officer may prescribe," and (2) RIGL section 37-2-7(16) which identifies the Board of Governors for Higher Education as a public agency and gives binding contractual authority to the College Purchasing Agent.

____5 I/we certify that all of the vendor information provided is correct and complete.

____6 I/we certify that I or my firm possesses all licenses required by Federal and State law and regulation as they pertain to the requirements of the solicitation and offer made herein and shall maintain such required license(s) during the entire course of the contract resulting from the offer contained herein and, should my/our license lapse or be suspended, I/we shall immediately inform the Community College of Rhode Island Purchasing Agent in writing of such circumstance.

____7 I/we certify that I/we will maintain required insurance during the entire course of the contract resulting from the offer contained herein and, should my/our insurance lapse or be suspended, I/we shall immediately inform the Community College of Rhode Island Purchasing Agent in writing of such circumstance.

____8 I/we certify that I/we understand that falsification of any information herein or failure to notify the Community College of Rhode Island Purchasing Agent as certified herein may be grounds for suspension, debarment and/or prosecution for perjury.

____9 I/we acknowledge that the provisions and procedures set forth in this form apply to any offer contained herein.

IF YOU HAVE ANSWERED "YES" TO QUESTIONS #1 or 2 OR IF YOU ARE UNABLE TO CERTIFY YES TO QUESTIONS #3 – 9 OF THE FOREGOING, PROVIDE DETAILS/EXPLANATION BELOW AND/OR IN AN ATTACHED STATEMENT.

_____

Signature below commits vendor to the attached offer and certifies (1) that the offer reflects all solicitation amendments (2) that the above statements and information are accurate (3) that vendor understands and has complied with the requirements set forth herein

Vendor's
Signature: _____Bid Number: _____Date:_____
(Person authorized to enter into contracts; signature must be in ink) (If applicable)

_____
Print Name and Title of Company official signing offer Telephone Number

Form **W-9**
(Rev. January 2011)
Department of the Treasury
Internal Revenue Service

Request for Taxpayer Identification Number and Certification

Give Form to the requester. Do not send to the IRS.

Print or type
See **Specific Instructions** on page 2.

Name (as shown on your income tax return)

Business name/disregarded entity name, if different from above

Check appropriate box for federal tax classification (required): ☐ Individual/sole proprietor ☐ C Corporation ☐ S Corporation ☐ Partnership ☐ Trust/estate

☐ Limited liability company. Enter the tax classification (C=C corporation, S=S corporation, P=partnership) ▶

☐ Other (see instructions) ▶

☐ Exempt payee

Address (number, street, and apt. or suite no.)

Requester's name and address (optional)

City, state, and ZIP code

List account number(s) here (optional)

Part I Taxpayer Identification Number (TIN)

Enter your TIN in the appropriate box. The TIN provided must match the name given on the "Name" line to avoid backup withholding. For individuals, this is your social security number (SSN). However, for a resident alien, sole proprietor, or disregarded entity, see the Part I instructions on page 3. For other entities, it is your employer identification number (EIN). If you do not have a number, see *How to get a TIN* on page 3.

Note. If the account is in more than one name, see the chart on page 4 for guidelines on whose number to enter.

Social security number

☐☐☐ – ☐☐ – ☐☐☐☐

Employer identification number

☐☐ – ☐☐☐☐☐☐☐

Part II Certification

Under penalties of perjury, I certify that:

1. The number shown on this form is my correct taxpayer identification number (or I am waiting for a number to be issued to me), and
2. I am not subject to backup withholding because: (a) I am exempt from backup withholding, or (b) I have not been notified by the Internal Revenue Service (IRS) that I am subject to backup withholding as a result of a failure to report all interest or dividends, or (c) the IRS has notified me that I am no longer subject to backup withholding, and
3. I am a U.S. citizen or other U.S. person (defined below).

Certification instructions. You must cross out item 2 above if you have been notified by the IRS that you are currently subject to backup withholding because you have failed to report all interest and dividends on your tax return. For real estate transactions, item 2 does not apply. For mortgage interest paid, acquisition or abandonment of secured property, cancellation of debt, contributions to an individual retirement arrangement (IRA), and generally, payments other than interest and dividends, you are not required to sign the certification, but you must provide your correct TIN. See the instructions on page 4.

Sign Here **Signature of U.S. person ▶** **Date ▶**

General Instructions

Section references are to the Internal Revenue Code unless otherwise noted.

Purpose of Form

A person who is required to file an information return with the IRS must obtain your correct taxpayer identification number (TIN) to report, for example, income paid to you, real estate transactions, mortgage interest you paid, acquisition or abandonment of secured property, cancellation of debt, or contributions you made to an IRA.

Use Form W-9 only if you are a U.S. person (including a resident alien), to provide your correct TIN to the person requesting it (the requester) and, when applicable, to:

1. Certify that the TIN you are giving is correct (or you are waiting for a number to be issued),

2. Certify that you are not subject to backup withholding, or

3. Claim exemption from backup withholding if you are a U.S. exempt payee. If applicable, you are also certifying that as a U.S. person, your allocable share of any partnership income from a U.S. trade or business is not subject to the withholding tax on foreign partners' share of effectively connected income.

Note. If a requester gives you a form other than Form W-9 to request your TIN, you must use the requester's form if it is substantially similar to this Form W-9.

Definition of a U.S. person. For federal tax purposes, you are considered a U.S. person if you are:

- An individual who is a U.S. citizen or U.S. resident alien,
- A partnership, corporation, company, or association created or organized in the United States or under the laws of the United States,
- An estate (other than a foreign estate), or
- A domestic trust (as defined in Regulations section 301.7701-7).

Special rules for partnerships. Partnerships that conduct a trade or business in the United States are generally required to pay a withholding tax on any foreign partners' share of income from such business. Further, in certain cases where a Form W-9 has not been received, a partnership is required to presume that a partner is a foreign person, and pay the withholding tax. Therefore, if you are a U.S. person that is a partner in a partnership conducting a trade or business in the United States, provide Form W-9 to the partnership to establish your U.S. status and avoid withholding on your share of partnership income.

The person who gives Form W-9 to the partnership for purposes of establishing its U.S. status and avoiding withholding on its allocable share of net income from the partnership conducting a trade or business in the United States is in the following cases:

- The U.S. owner of a disregarded entity and not the entity,
- The U.S. grantor or other owner of a grantor trust and not the trust, and
- The U.S. trust (other than a grantor trust) and not the beneficiaries of the trust.

Foreign person. If you are a foreign person, do not use Form W-9. Instead, use the appropriate Form W-8 (see Publication 515, Withholding of Tax on Nonresident Aliens and Foreign Entities).

Nonresident alien who becomes a resident alien. Generally, only a nonresident alien individual may use the terms of a tax treaty to reduce or eliminate U.S. tax on certain types of income. However, most tax treaties contain a provision known as a "saving clause." Exceptions specified in the saving clause may permit an exemption from tax to continue for certain types of income even after the payee has otherwise become a U.S. resident alien for tax purposes.

If you are a U.S. resident alien who is relying on an exception contained in the saving clause of a tax treaty to claim an exemption from U.S. tax on certain types of income, you must attach a statement to Form W-9 that specifies the following five items:

1. The treaty country. Generally, this must be the same treaty under which you claimed exemption from tax as a nonresident alien.
2. The treaty article addressing the income.
3. The article number (or location) in the tax treaty that contains the saving clause and its exceptions.
4. The type and amount of income that qualifies for the exemption from tax.
5. Sufficient facts to justify the exemption from tax under the terms of the treaty article.

Example. Article 20 of the U.S.-China income tax treaty allows an exemption from tax for scholarship income received by a Chinese student temporarily present in the United States. Under U.S. law, this student will become a resident alien for tax purposes if his or her stay in the United States exceeds 5 calendar years. However, paragraph 2 of the first Protocol to the U.S.-China treaty (dated April 30, 1984) allows the provisions of Article 20 to continue to apply even after the Chinese student becomes a resident alien of the United States. A Chinese student who qualifies for this exception (under paragraph 2 of the first protocol) and is relying on this exception to claim an exemption from tax on his or her scholarship or fellowship income would attach to Form W-9 a statement that includes the information described above to support that exemption.

If you are a nonresident alien or a foreign entity not subject to backup withholding, give the requester the appropriate completed Form W-8.

What is backup withholding? Persons making certain payments to you must under certain conditions withhold and pay to the IRS a percentage of such payments. This is called "backup withholding." Payments that may be subject to backup withholding include interest, tax-exempt interest, dividends, broker and barter exchange transactions, rents, royalties, nonemployee pay, and certain payments from fishing boat operators. Real estate transactions are not subject to backup withholding.

You will not be subject to backup withholding on payments you receive if you give the requester your correct TIN, make the proper certifications, and report all your taxable interest and dividends on your tax return.

Payments you receive will be subject to backup withholding if:

1. You do not furnish your TIN to the requester,
2. You do not certify your TIN when required (see the Part II instructions on page 3 for details),
3. The IRS tells the requester that you furnished an incorrect TIN,
4. The IRS tells you that you are subject to backup withholding because you did not report all your interest and dividends on your tax return (for reportable interest and dividends only), or
5. You do not certify to the requester that you are not subject to backup withholding under 4 above (for reportable interest and dividend accounts opened after 1983 only).

Certain payees and payments are exempt from backup withholding. See the instructions below and the separate Instructions for the Requester of Form W-9.

Also see *Special rules for partnerships* on page 1.

Updating Your Information

You must provide updated information to any person to whom you claimed to be an exempt payee if you are no longer an exempt payee and anticipate receiving reportable payments in the future from this person. For example, you may need to provide updated information if you are a C corporation that elects to be an S corporation, or if you no longer are tax exempt. In addition, you must furnish a new Form W-9 if the name or TIN changes for the account, for example, if the grantor of a grantor trust dies.

Penalties

Failure to furnish TIN. If you fail to furnish your correct TIN to a requester, you are subject to a penalty of $50 for each such failure unless your failure is due to reasonable cause and not to willful neglect.

Civil penalty for false information with respect to withholding. If you make a false statement with no reasonable basis that results in no backup withholding, you are subject to a $500 penalty.

Criminal penalty for falsifying information. Willfully falsifying certifications or affirmations may subject you to criminal penalties including fines and/or imprisonment.

Misuse of TINs. If the requester discloses or uses TINs in violation of federal law, the requester may be subject to civil and criminal penalties.

Specific Instructions

Name

If you are an individual, you must generally enter the name shown on your income tax return. However, if you have changed your last name, for instance, due to marriage without informing the Social Security Administration of the name change, enter your first name, the last name shown on your social security card, and your new last name.

If the account is in joint names, list first, and then circle, the name of the person or entity whose number you entered in Part I of the form.

Sole proprietor. Enter your individual name as shown on your income tax return on the "Name" line. You may enter your business, trade, or "doing business as (DBA)" name on the "Business name/disregarded entity name" line.

Partnership, C Corporation, or S Corporation. Enter the entity's name on the "Name" line and any business, trade, or "doing business as (DBA) name" on the "Business name/disregarded entity name" line.

Disregarded entity. Enter the owner's name on the "Name" line. The name of the entity entered on the "Name" line should never be a disregarded entity. The name on the "Name" line must be the name shown on the income tax return on which the income will be reported. For example, if a foreign LLC that is treated as a disregarded entity for U.S. federal tax purposes has a domestic owner, the domestic owner's name is required to be provided on the "Name" line. If the direct owner of the entity is also a disregarded entity, enter the first owner that is not disregarded for federal tax purposes. Enter the disregarded entity's name on the "Business name/disregarded entity name" line. If the owner of the disregarded entity is a foreign person, you must complete an appropriate Form W-8.

Note. Check the appropriate box for the federal tax classification of the person whose name is entered on the "Name" line (Individual/sole proprietor, Partnership, C Corporation, S Corporation, Trust/estate).

Limited Liability Company (LLC). If the person identified on the "Name" line is an LLC, check the "Limited liability company" box only and enter the appropriate code for the tax classification in the space provided. If you are an LLC that is treated as a partnership for federal tax purposes, enter "P" for partnership. If you are an LLC that has filed a Form 8832 or a Form 2553 to be taxed as a corporation, enter "C" for C corporation or "S" for S corporation. If you are an LLC that is disregarded as an entity separate from its owner under Regulation section 301.7701-3 (except for employment and excise tax), do not check the LLC box unless the owner of the LLC (required to be identified on the "Name" line) is another LLC that is not disregarded for federal tax purposes. If the LLC is disregarded as an entity separate from its owner, enter the appropriate tax classification of the owner identified on the "Name" line.

Other entities. Enter your business name as shown on required federal tax documents on the "Name" line. This name should match the name shown on the charter or other legal document creating the entity. You may enter any business, trade, or DBA name on the "Business name/ disregarded entity name" line.

Exempt Payee

If you are exempt from backup withholding, enter your name as described above and check the appropriate box for your status, then check the "Exempt payee" box in the line following the "Business name/ disregarded entity name," sign and date the form.

Generally, individuals (including sole proprietors) are not exempt from backup withholding. Corporations are exempt from backup withholding for certain payments, such as interest and dividends.

Note. If you are exempt from backup withholding, you should still complete this form to avoid possible erroneous backup withholding.

The following payees are exempt from backup withholding:

1. An organization exempt from tax under section 501(a), any IRA, or a custodial account under section 403(b)(7) if the account satisfies the requirements of section 401(f)(2),

2. The United States or any of its agencies or instrumentalities,

3. A state, the District of Columbia, a possession of the United States, or any of their political subdivisions or instrumentalities,

4. A foreign government or any of its political subdivisions, agencies, or instrumentalities, or

5. An international organization or any of its agencies or instrumentalities.

Other payees that may be exempt from backup withholding include:

6. A corporation,

7. A foreign central bank of issue,

8. A dealer in securities or commodities required to register in the United States, the District of Columbia, or a possession of the United States,

9. A futures commission merchant registered with the Commodity Futures Trading Commission,

10. A real estate investment trust,

11. An entity registered at all times during the tax year under the Investment Company Act of 1940,

12. A common trust fund operated by a bank under section 584(a),

13. A financial institution,

14. A middleman known in the investment community as a nominee or custodian, or

15. A trust exempt from tax under section 664 or described in section 4947.

The following chart shows types of payments that may be exempt from backup withholding. The chart applies to the exempt payees listed above, 1 through 15.

IF the payment is for . . .	THEN the payment is exempt for . . .
Interest and dividend payments	All exempt payees except for 9
Broker transactions	Exempt payees 1 through 5 and 7 through 13. Also, C corporations.
Barter exchange transactions and patronage dividends	Exempt payees 1 through 5
Payments over $600 required to be reported and direct sales over $5,000 [1]	Generally, exempt payees 1 through 7 [2]

[1] See Form 1099-MISC, Miscellaneous Income, and its instructions.

[2] However, the following payments made to a corporation and reportable on Form 1099-MISC are not exempt from backup withholding: medical and health care payments, attorneys' fees, gross proceeds paid to an attorney, and payments for services paid by a federal executive agency.

Part I. Taxpayer Identification Number (TIN)

Enter your TIN in the appropriate box. If you are a resident alien and you do not have and are not eligible to get an SSN, your TIN is your IRS individual taxpayer identification number (ITIN). Enter it in the social security number box. If you do not have an ITIN, see *How to get a TIN* below.

If you are a sole proprietor and you have an EIN, you may enter either your SSN or EIN. However, the IRS prefers that you use your SSN.

If you are a single-member LLC that is disregarded as an entity separate from its owner (see *Limited Liability Company (LLC)* on page 2), enter the owner's SSN (or EIN, if the owner has one). Do not enter the disregarded entity's EIN. If the LLC is classified as a corporation or partnership, enter the entity's EIN.

Note. See the chart on page 4 for further clarification of name and TIN combinations.

How to get a TIN. If you do not have a TIN, apply for one immediately. To apply for an SSN, get Form SS-5, Application for a Social Security Card, from your local Social Security Administration office or get this form online at *www.ssa.gov*. You may also get this form by calling 1-800-772-1213. Use Form W-7, Application for IRS Individual Taxpayer Identification Number, to apply for an ITIN, or Form SS-4, Application for Employer Identification Number, to apply for an EIN. You can apply for an EIN online by accessing the IRS website at *www.irs.gov/businesses* and clicking on Employer Identification Number (EIN) under Starting a Business. You can get Forms W-7 and SS-4 from the IRS by visiting IRS.gov or by calling 1-800-TAX-FORM (1-800-829-3676).

If you are asked to complete Form W-9 but do not have a TIN, write "Applied For" in the space for the TIN, sign and date the form, and give it to the requester. For interest and dividend payments, and certain payments made with respect to readily tradable instruments, generally you will have 60 days to get a TIN and give it to the requester before you are subject to backup withholding on payments. The 60-day rule does not apply to other types of payments. You will be subject to backup withholding on all such payments until you provide your TIN to the requester.

Note. Entering "Applied For" means that you have already applied for a TIN or that you intend to apply for one soon.

Caution: *A disregarded domestic entity that has a foreign owner must use the appropriate Form W-8.*

Part II. Certification

To establish to the withholding agent that you are a U.S. person, or resident alien, sign Form W-9. You may be requested to sign by the withholding agent even if item 1, below, and items 4 and 5 on page 4 indicate otherwise.

For a joint account, only the person whose TIN is shown in Part I should sign (when required). In the case of a disregarded entity, the person identified on the "Name" line must sign. Exempt payees, see *Exempt Payee* on page 3.

Signature requirements. Complete the certification as indicated in items 1 through 3, below, and items 4 and 5 on page 4.

1. Interest, dividend, and barter exchange accounts opened before 1984 and broker accounts considered active during 1983. You must give your correct TIN, but you do not have to sign the certification.

2. Interest, dividend, broker, and barter exchange accounts opened after 1983 and broker accounts considered inactive during 1983. You must sign the certification or backup withholding will apply. If you are subject to backup withholding and you are merely providing your correct TIN to the requester, you must cross out item 2 in the certification before signing the form.

3. Real estate transactions. You must sign the certification. You may cross out item 2 of the certification.

4. Other payments. You must give your correct TIN, but you do not have to sign the certification unless you have been notified that you have previously given an incorrect TIN. "Other payments" include payments made in the course of the requester's trade or business for rents, royalties, goods (other than bills for merchandise), medical and health care services (including payments to corporations), payments to a nonemployee for services, payments to certain fishing boat crew members and fishermen, and gross proceeds paid to attorneys (including payments to corporations).

5. Mortgage interest paid by you, acquisition or abandonment of secured property, cancellation of debt, qualified tuition program payments (under section 529), IRA, Coverdell ESA, Archer MSA or HSA contributions or distributions, and pension distributions. You must give your correct TIN, but you do not have to sign the certification.

What Name and Number To Give the Requester

For this type of account:	Give name and SSN of:
1. Individual	The individual
2. Two or more individuals (joint account)	The actual owner of the account or, if combined funds, the first individual on the account [1]
3. Custodian account of a minor (Uniform Gift to Minors Act)	The minor [2]
4. a. The usual revocable savings trust (grantor is also trustee)	The grantor-trustee [1]
b. So-called trust account that is not a legal or valid trust under state law	The actual owner [1]
5. Sole proprietorship or disregarded entity owned by an individual	The owner [3]
6. Grantor trust filing under Optional Form 1099 Filing Method 1 (see Regulation section 1.671-4(b)(2)(i)(A))	The grantor*
For this type of account:	**Give name and EIN of:**
7. Disregarded entity not owned by an individual	The owner
8. A valid trust, estate, or pension trust	Legal entity [4]
9. Corporation or LLC electing corporate status on Form 8832 or Form 2553	The corporation
10. Association, club, religious, charitable, educational, or other tax-exempt organization	The organization
11. Partnership or multi-member LLC	The partnership
12. A broker or registered nominee	The broker or nominee
13. Account with the Department of Agriculture in the name of a public entity (such as a state or local government, school district, or prison) that receives agricultural program payments	The public entity
14. Grantor trust filing under the Form 1041 Filing Method or the Optional Form 1099 Filing Method 2 (see Regulation section 1.671-4(b)(2)(i)(B))	The trust

[1] List first and circle the name of the person whose number you furnish. If only one person on a joint account has an SSN, that person's number must be furnished.

[2] Circle the minor's name and furnish the minor's SSN.

[3] You must show your individual name and you may also enter your business or "DBA" name on the "Business name/disregarded entity" name line. You may use either your SSN or EIN (if you have one), but the IRS encourages you to use your SSN.

[4] List first and circle the name of the trust, estate, or pension trust. (Do not furnish the TIN of the personal representative or trustee unless the legal entity itself is not designated in the account title.) Also see *Special rules for partnerships* on page 1.

***Note.** Grantor also must provide a Form W-9 to trustee of trust.

Note. If no name is circled when more than one name is listed, the number will be considered to be that of the first name listed.

Secure Your Tax Records from Identity Theft

Identity theft occurs when someone uses your personal information such as your name, social security number (SSN), or other identifying information, without your permission, to commit fraud or other crimes. An identity thief may use your SSN to get a job or may file a tax return using your SSN to receive a refund.

To reduce your risk:

- Protect your SSN,
- Ensure your employer is protecting your SSN, and
- Be careful when choosing a tax preparer.

If your tax records are affected by identity theft and you receive a notice from the IRS, respond right away to the name and phone number printed on the IRS notice or letter.

If your tax records are not currently affected by identity theft but you think you are at risk due to a lost or stolen purse or wallet, questionable credit card activity or credit report, contact the IRS Identity Theft Hotline at 1-800-908-4490 or submit Form 14039.

For more information, see Publication 4535, Identity Theft Prevention and Victim Assistance.

Victims of identity theft who are experiencing economic harm or a system problem, or are seeking help in resolving tax problems that have not been resolved through normal channels, may be eligible for Taxpayer Advocate Service (TAS) assistance. You can reach TAS by calling the TAS toll-free case intake line at 1-877-777-4778 or TTY/TDD 1-800-829-4059.

Protect yourself from suspicious emails or phishing schemes. Phishing is the creation and use of email and websites designed to mimic legitimate business emails and websites. The most common act is sending an email to a user falsely claiming to be an established legitimate enterprise in an attempt to scam the user into surrendering private information that will be used for identity theft.

The IRS does not initiate contacts with taxpayers via emails. Also, the IRS does not request personal detailed information through email or ask taxpayers for the PIN numbers, passwords, or similar secret access information for their credit card, bank, or other financial accounts.

If you receive an unsolicited email claiming to be from the IRS, forward this message to *phishing@irs.gov.* You may also report misuse of the IRS name, logo, or other IRS property to the Treasury Inspector General for Tax Administration at 1-800-366-4484. You can forward suspicious emails to the Federal Trade Commission at: *spam@uce.gov* or contact them at *www.ftc.gov/idtheft* or 1-877-IDTHEFT (1-877-438-4338).

Visit IRS.gov to learn more about identity theft and how to reduce your risk.

Privacy Act Notice

Section 6109 of the Internal Revenue Code requires you to provide your correct TIN to persons (including federal agencies) who are required to file information returns with the IRS to report interest, dividends, or certain other income paid to you; mortgage interest you paid; the acquisition or abandonment of secured property; the cancellation of debt; or contributions you made to an IRA, Archer MSA, or HSA. The person collecting this form uses the information on the form to file information returns with the IRS, reporting the above information. Routine uses of this information include giving it to the Department of Justice for civil and criminal litigation and to cities, states, the District of Columbia, and U.S. possessions for use in administering their laws. The information also may be disclosed to other countries under a treaty, to federal and state agencies to enforce civil and criminal laws, or to federal law enforcement and intelligence agencies to combat terrorism. You must provide your TIN whether or not you are required to file a tax return. Under section 3406, payers must generally withhold a percentage of taxable interest, dividend, and certain other payments to a payee who does not give a TIN to the payer. Certain penalties may also apply for providing false or fraudulent information.

BID SOLICITATION

BID NO. **B0002619**

Community College of Rhode Island
400 East Ave
Warwick RI 02886

Date: 10/10/13

Vendor Info:

Name:

Address:

Phone:
Fax:
Contact Person:
Email:

Ship To: Community College of RI
400 East Ave
Warwick RI 02886

CONDITIONS OF OFFER:

1. In accordance with Chapter 37-2-54(3) of the Rhode Island General Laws "No purchase or contract shall be binding on the State or any agency thereof unless approved by the Department of Administration or made under general regulations which the Chief Purchasing Officer may prescribe" including change orders and other type of contracts.

"Any alleged oral agreement or arrangements made by a bidder or contractor with any agency or an employee of the Office of Purchases may be disregarded and shall not be binding on the State".

2. I/we certify that I or my firm possesses all licenses and certification required by Federal and State Law and regulation as they pertain to the requirements of this solicitation.

3. I/we certify that I/we will maintain required insurance during the entire course of the contract resulting from this solicitation.

4. Offers must be signed and dated by a person authorized to enter into contracts on behalf of vendor. Signature commits vendor to the terms and prices specified on this contract for a period of 30 calendar days from the bid opening date.

Requisition: **R0038127**

Item	Quantity	UOM	Description	Unit Price	Total
			CLOSING DATE & TIME: OCTOBER 23, 2013 AT 10:00AM . RULES FOR SUBMITTING OFFERS: . **********IMPORTANT********** BID RESPONSE MUST BE SUBMITTED USING CCRI BID FORM. ANY OTHER FORM SUBMITTED WILL BE CONSIDERED NON-RESPONSIVE AND WILL BE DISQUALIFIED. . VENDOR NAME MUST APPEAR ON ALL PAGES. . IF BIDDING ON ANY ITEM, THE ENTIRE BID MUST BE RETURNED. . A COMPLETE, SIGNED BID/OFFER PACKAGE, INCLUDING A COMPLETED TWO-PAGE COMMUNITY COLLEGE OF RI BIDDER CERTIFICATION FORM/CONTRACT OFFER MUST BE SUBMITTED WITH THE SPECIFIC BID/RFP NUMBER, DATE, AND TIME OF BID CLOSING NOTED ON THE ENVELOPE. . MAIL TO:		

CONTINUED

NOTE TO VENDOR: The College is a tax-exempt public educational institution.

THIS IS A SOLICITATION FOR BID
NOT A PURCHASE ORDER.
DO NOT SHIP ANY PRODUCT
BASED ON THIS DOCUMENT.

Vendor Signature Date

Not valid unless signed by authorized agent of vendor

BID SOLICITATION

BID NO. **B0002619**

Community College of Rhode Island
400 East Ave
Warwick RI 02886

Date: 10/10/13

Vendor Info:

Name:

Address:

Phone:
Fax:
Contact Person:
Email:

Ship To: Community College of RI
400 East Ave
Warwick RI 02886

CONDITIONS OF OFFER:

1. In accordance with Chapter 37-2-54(3) of the Rhode Island General Laws "No purchase or contract shall be binding on the State or any agency thereof unless approved by the Department of Administration or made under general regulations which the Chief Purchasing Officer may prescribe" including change orders and other type of contracts.

"Any alleged oral agreement or arrangements made by a bidder or contractor with any agency or an employee of the Office of Purchases may be disregarded and shall not be binding on the State".

2. I/we certify that I or my firm possesses all licenses and certification required by Federal and State Law and regulation as they pertain to the requirements of this solicitation.

3. I/we certify that I/we will maintain required insurance during the entire course of the contract resulting from this solicitation.

4. Offers must be signed and dated by a person authorized to enter into contracts on behalf of vendor. Signature commits vendor to the terms and prices specified on this contract for a period of 30 calendar days from the bid opening date.

Requisition: **R0038127**

Item	Quantity	UOM	Description	Unit Price	Total
1			(Continued...) PURCHASING OFFICE COMMUNITY COLLEGE OF RI 400 EAST AVENUE WARWICK, RI 02886 ********** . BIDS MISDIRECTED TO OTHER LOCATIONS OR WHICH ARE NOT PRESENT AT THE COMMUNITY COLLEGE OF RHODE ISLAND PURCHASING OFFICE AT THE TIME OF CLOSING FOR WHATEVER CAUSE WILL BE CONSIDERED TO BE LATE AND WILL NOT BE OPENED. FOR THE PURPOSE OF THIS REQUIREMENT, THE OFFICIAL TIME AND DATE SHALL BE THAT OF THE TIME CLOCK IN THE PURCHASING OFFICE OF COMMUNITY COLLEGE OF RI. POSTMARKS SHALL NOT BE CONSIDERED PROOF OF TIMELY SUBMISSION. . FAILURE TO COMPLETE FORM AS INSTRUCTED MAY BE GROUNDS FOR "DISQUALIFICATION". .		

CONTINUED

NOTE TO VENDOR: The College is a tax-exempt public educational institution.

THIS IS A SOLICITATION FOR BID
NOT A PURCHASE ORDER.
DO NOT SHIP ANY PRODUCT
BASED ON THIS DOCUMENT.

Vendor Signature Date

Not valid unless signed by authorized agent of vendor

BID SOLICITATION

BID NO. **B0002619**

Community College of Rhode Island
400 East Ave
Warwick RI 02886

Date: 10/10/13

Vendor Info:

Name:

Address:

Phone:
Fax:
Contact Person:
Email:

Ship To: Community College of RI
400 East Ave
Warwick RI 02886

CONDITIONS OF OFFER:

1. In accordance with Chapter 37-2-54(3) of the Rhode Island General Laws "No purchase or contract shall be binding on the State or any agency thereof unless approved by the Department of Administration or made under general regulations which the Chief Purchasing Officer may prescribe" including change orders and other type of contracts.

"Any alleged oral agreement or arrangements made by a bidder or contractor with any agency or an employee of the Office of Purchases may be disregarded and shall not be binding on the State".

2. I/we certify that I or my firm possesses all licenses and certification required by Federal and State Law and regulation as they pertain to the requirements of this solicitation.

3. I/we certify that I/we will maintain required insurance during the entire course of the contract resulting from this solicitation.

4. Offers must be signed and dated by a person authorized to enter into contracts on behalf of vendor. Signature commits vendor to the terms and prices specified on this contract for a period of 30 calendar days from the bid opening date.

Requisition: **R0038127**

Item	Quantity	UOM	Description	Unit Price	Total
1			(Continued...) EACH BID/OFFER MUST BE SUBMITTED IN A SEPARATE SEALED ENVELOPE. IF ATTACHMENTS ARE REQUIRED, BE SURE THEY ARE INCLUDED IN THE PACKAGE. (E.G., BID SURETIES, SPECIAL LICENSES, SAMPLES, SPEIFICATIONS THAT DIFFER FROM SOLICITATION). . BID PRICE IS NET F.O.B DESTINATION AND SHALL INCLUDE INSIDE DELIVERY AT NO EXTRA COST. . BIDDING: (a) A SINGLE PRICE SHALL BE QUOTED FOR EACH ITEM AGAINST WHICH A PROPOSAL IS SUBMITTED. THIS PRICE WILL BE THE MAXIMUM IN EFFECT DURING THE AGREEMENT PERIOD. ANY PRICE DECLINE AT THE MANUFACTURER'S LEVEL SHALL BE REFLECTED IN A REDUCTION OF THE AGREEMENT PRICE TO THE COLLEGE . (b) QUANTITIES, IF ANY, ARE ESTIMATED ONLY. THE AGREEMENT SHALL COVER THE ACTUAL QUANTITIES ORDERED DURING THE PERIOD. DELIVERIES WILL		

CONTINUED

NOTE TO VENDOR: The College is a tax-exempt public educational institution.

THIS IS A SOLICITATION FOR BID
NOT A PURCHASE ORDER.
DO NOT SHIP ANY PRODUCT
BASED ON THIS DOCUMENT.

Vendor Signature Date

Not valid unless signed by authorized agent of vendor

BID SOLICITATION

BID NO. **B0002619**

Community College of Rhode Island
400 East Ave
Warwick RI 02886

Date: 10/10/13

Vendor Info:

Name:

Address:

Phone:
Fax:
Contact Person:
Email:

Ship To: Community College of RI
400 East Ave
Warwick RI 02886

CONDITIONS OF OFFER:

1. In accordance with Chapter 37-2-54(3) of the Rhode Island General Laws "No purchase or contract shall be binding on the State or any agency thereof unless approved by the Department of Administration or made under general regulations which the Chief Purchasing Officer may prescribe" including change orders and other type of contracts.

"Any alleged oral agreement or arrangements made by a bidder or contractor with any agency or an employee of the Office of Purchases may be disregarded and shall not be binding on the State".

2. I/we certify that I or my firm possesses all licenses and certification required by Federal and State Law and regulation as they pertain to the requirements of this solicitation.

3. I/we certify that I/we will maintain required insurance during the entire course of the contract resulting from this solicitation.

4. Offers must be signed and dated by a person authorized to enter into contracts on behalf of vendor. Signature commits vendor to the terms and prices specified on this contract for a period of 30 calendar days from the bid opening date.

Requisition: **R0038127**

Item	Quantity	UOM	Description	Unit Price	Total
1			(Continued...) BE BILLED AT THE SINGLE, FIRM, AWARDED UNIT PRICE QUOTED REGARDLESS OF THE QUANTITIES ORDERED . (c) BID PRICE IS NET F.O.B. DESTINATION AND SHALL INCLUDE INSIDE DELIVERY AT NO EXTRA COST . (d) BIDS FOR SINGLE ITEMS AND/OR A SMALL PERCENTAGE OF TOTAL ITEMS LISTED, MAY, AT THE COLLEGE'S SOLE OPTION, BE REJECTED AS BEING NON-RESPONSIVE TO THE INTENT OF THIS REQUEST . ORDERING: (a) THE COLLEGE WILL SUBMIT INDIVIDUAL ORDERS FOR THE VARIOUS ITEMS AND VARIOUS QUANTITIES AS MAY BE REQUIRED DURING THE AGREEMENT PERIOD . (b) EXCEPTION - REGARDLESS OF ANY AGREEMENT RESULTING FROM THIS BID, THE COLLEGE RESERVES THE RIGHT TO SOLICIT PRICES SEPARATELY FOR ANY EXTRA		

CONTINUED

NOTE TO VENDOR: The College is a tax-exempt public educational institution.

THIS IS A SOLICITATION FOR BID
NOT A PURCHASE ORDER.
DO NOT SHIP ANY PRODUCT
BASED ON THIS DOCUMENT.

Vendor Signature Date

Not valid unless signed by authorized agent of vendor

BID SOLICITATION

BID NO. **B0002619**

Community College of Rhode Island
400 East Ave
Warwick RI 02886

Date: 10/10/13

Vendor Info:

Name:

Address:

Phone:
Fax:
Contact Person:
Email:

Ship To: Community College of RI
400 East Ave
Warwick RI 02886

CONDITIONS OF OFFER:

1. In accordance with Chapter 37-2-54(3) of the Rhode Island General Laws "No purchase or contract shall be binding on the State or any agency thereof unless approved by the Department of Administration or made under general regulations which the Chief Purchasing Officer may prescribe" including change orders and other type of contracts.

"Any alleged oral agreement or arrangements made by a bidder or contractor with any agency or an employee of the Office of Purchases may be disregarded and shall not be binding on the State".

2. I/we certify that I or my firm possesses all licenses and certification required by Federal and State Law and regulation as they pertain to the requirements of this solicitation.

3. I/we certify that I/we will maintain required insurance during the entire course of the contract resulting from this solicitation.

4. Offers must be signed and dated by a person authorized to enter into contracts on behalf of vendor. Signature commits vendor to the terms and prices specified on this contract for a period of 30 calendar days from the bid opening date.

Requisition: **R0038127**

Item	Quantity UOM	Description	Unit Price	Total
1		(Continued...) LARGE REQUIREMENTS FOR DELIVERY TO SPECIFIC DESTINATIONS. . IF BRAND OR MODEL NUMBERS ARE SUBSTITUTED, VENDORS MUST INCLUDE SPECIFICATIONS WITH BID PROPOSAL. FAILURE TO SUBMIT SPECIFICATIONS WITH BID PROPOSAL MAY RESULT IN DISQUALIFICATION OF BID. ITEMS IN CATALOGS MUST BE CLEARLY MARKED AND PAGES TABBED. . THE STATE/CCRI, AT ITS SOLE DISCRETION, SHALL RESERVE THE RIGHT TO MAKE ONE OR MULTIPLE AWARDS FOR THIS REQUIREMENT AND/OR TO REJECT ANY OR ALL BIDS.		

1	1.00 EA	HOBART HS9 SLICER AS PER ATTACHED SPECIFICATIONS FOR THE KITCHEN AT THE WARWICK CAMPUS OF CCRI.	$_____	$_____

NOTE TO VENDOR: The College is a tax-exempt public educational institution.

THIS IS A SOLICITATION FOR BID
NOT A PURCHASE ORDER.
DO NOT SHIP ANY PRODUCT
BASED ON THIS DOCUMENT.

Vendor Signature Date

Not valid unless signed by authorized agent of vendor

Item # _____

Quantity _____

C.S.I. Section 11400

HOBART
701 S Ridge Avenue, Troy, OH 45374
1-888-4HOBART • www.hobartcorp.com

HS9/HS9N SLICER

STANDARD FEATURES

KNIFE

- 13" CleanCut™ Knife
- Removable Ring Guard Cover
- Zero Knife Exposure
- Heavy-Gauge Stainless Steel Knife Cover
- Top-Mounted Borazon Stone Sharpener

OPERATION

- ½ H.P. Knife Drive Motor
- Timing Belt for Automatic Drive System
- Variable Four-Speed Automatic Carriage with Front Mounted Controls
- Three Stroke Lengths

INTERLOCKS

- Home-Start Position
- Close-to-Stop
- Gauge-Plate Interlock
- Carriage-System Interlock
- No-Volt Release
- 30-Second Shut Off

HOUSING AND BASE

- Sanitary Anodized Aluminum Base
- Machined Grooves on Gauge Plate and Knife Cover
- Exclusive Tilting, Removable Carriage System
- Electroless Nickel Plated Single Slide Rod with Reservoir Wick in Transport
- Double-Action Indexing Cam
- Manual Lift Handle
- Ergonomic-Style Handle
- Rear-Mounted, Removable Meat/Vegetable Grip Arm

MODELS

- ❑ HS9 – Automatic Slicer/Anodized Finish with Removable Knife Feature
- ❑ HS9N – Automatic Slicer/Anodized Finish with Non-Removable Knife Feature

ACCESSORIES

- ❑ Low Fence
- ❑ Food Chute
- ❑ Slaw Tray
- ❑ Debris Deflector

Specifications, Details and Dimensions on Inside and Back.

NSF

ETL C US LISTED Intertek

HOBART

HS9/HS9N SLICER

HOBART
701 S Ridge Avenue, Troy, OH 45374
1-888-4HOBART • www.hobartcorp.com

SOLUTIONS / BENEFITS

PRECISION SLICING

13" CleanCut™ Knife
- Super alloy edge stays sharp longer
- Lasts two to three times longer than carbon coated or stainless steel knives

Top Mounted Borazon Stone Sharpener
- Single-action sharpens and hones in just five seconds
- Removable and warewasher safe for easy cleaning and sanitation – can be used wet or dry
- Lifetime guaranteed Borazon sharpening stones provide maximum performance with reduced maintenance costs

Machined Grooves on Gauge Plate and Knife Cover
- Reduces drag for smoother slicing motion

Double-Action Indexing Cam
- The first full revolution of the indexing knob provides precise control of shaving, chipping and thin slicing
- The second revolution opens the gauge plate quickly for thicker slicing
- Gauge plate holds position for consistent, precision slicing

EASY TO USE

½ H.P. Knife Drive Motor
- Reserve power runs at 430 rpm for optimum results

Timing Belt Automatic Drive System
- Extends belt life while producing optimum slicing results
- Quieter operating slicer
- Four carriage speeds including 28, 38, 48 and 58 strokes per minute

Three Stroke Lengths
- Three stroke lengths ideal for a variety of products

Electroless Nickel Plated Single Slide Rod with Reservoir Wick in Transport
- Smooth operation with continous lubrication of carriage rod

Zero Knife Exposure*
- Knife edge is covered when sharpener is both mounted and removed, making cleaning easier
- Gauge plate remains closed during operation of sharpener

Home Start Position
- Carriage must be in 'home position' before the slicer will start

Close to Stop
- Closing of the gauge plate turns off the slicer

Gauge Plate Interlock
- Gauge plate must be closed to remove carriage for cleaning and cannot be opened when removed

Carriage System Interlock
- Will not tilt away or remove if gauge plate is not closed

No Volt Release
- Slicer must be restarted if power fails or slicer is unplugged

Automatic Shutoff
- Knife shuts off after 30 seconds of inactivity

EASY TO CLEAN

Removable Knife Option* – HS9
- Knife easily removes with patented removal tool
- Area within ring guard is open for faster cleaning
- Knife and tool are warewasher safe for easy cleaning and sanitation

Removable Ring Guard Cover*
- Catches product debris around the knife for easy removal during cleaning
- Reduces time to 'floss' during cleaning

Exclusive Tilting, Removable Carriage System*
- Tilt design allows for ease of mid-day cleaning
- Removable for complete cleaning and sanitation

Rear-Mounted, Removable Meat Grip
- Opens up front of product tray for unobstructed loading
- Removable meat grip allows for easy cleaning

Manual Lift Handle
- Props machine for easy cleaning underneath slicer

Sanitary Anodized Aluminum Base
- Limited cracks/crevices or bolt holes where product can lodge and bacteria may grow
- Easy clean up and durable finish

*Feature unique to Hobart

SPECIFICATIONS

KNIFE

13" CleanCut Knife: The knife is approximately 13 inches, constructed of 304L stainless steel and high performance Stellite alloy. Knife cover is retained magnetically, and is quickly removed by pulling straight back on the top cover knob.

Removable Knife Option HS9: The patented knife removal tool covers the knife edge and safely removes knife from gauge plate to allow for thorough cleaning.

Removable Ring Guard Cover: Fits on top of ring guard to catch food debris. When removed, reveals a 0.12" space between knife and guard for easier flossing. Ring guard is made with Zytel™ plastic and can be washed in warewasher or three compartment sink.

Zero Knife Exposure: Knife edge is not exposed during cleaning or sharpening procedures.

Top Mounted Borazon Stone Sharpener: Single action operation utilizing two Borazon stones to sharpen and hone in five seconds. Removable, top mounted and warewasher safe. When sharpener is removed for cleaning, knife edge is completely shielded. Borazon stones have a lifetime guarantee.

MOTOR

Poly V-Belt Knife Drive System: Knife is driven by a Hobart Poly V belt and runs at 430 rpm for optimal performance.

Four Stroke Speeds: Stroke speed can be set to 28, 38, 48 and 58 strokes per minute.

½ H.P. Knife Drive Motor: ½ H.P. permanently lubricated ball bearings. Single phase capacitor-start, induction run.

INTERLOCKS

Home Start Position: Home-start ensures carriage is in a convenient position before starting the slicer.

Close to Stop: After slicing, a quick turn of the index knob to the closed position turns off the slicer.

Gauge Plate Interlock: Gauge plate interlock protects knife edge when indicator is at zero.

Carriage System Interlock: Carriage will not tilt away or remove if gauge plate indicator is not closed.

No Volt Release: In the event of a power loss, slicer must be restarted before operation can continue.

Automatic Shut Off: Knife shuts off after 30 seconds of inactivity to extend motor life and save energy.

HOUSING AND BASE

Sanitary Anodized Aluminum Base: One-piece base has fewer places to harbor soil and is easier to clean. Limits holes or crevices in which food can lodge.

Finish: Stainless steel top cover, anodized aluminum product tray and gauge plate.

Exclusive Tilting, Removable Carriage System: Aluminum product tray tilts easily for mid-day cleaning and is removable for thorough cleaning and sanitation procedures. The carriage has 12.5" manual travel.

Electroless Nickel Plated Single Slide Rod with Reservoir Wick in Transport: Transport slide rod is E-Nickel electroless plated. Slide rod bearings feature an oil reservoir/oil wick.

Double-Action Indexing Cam: A solid construction index knob moves the gauge plate via a barrel cam ensuring consistent slice thickness across machine and over time. First revolution of index cam for precision slicing; second revolution for thicker slicing selection.

Manual Lift Lever: Helps hold slicer in tilted position for cleaning beneath the machine.

Ergonomic Style Handle: Specially shaped and positioned for ease of use during manual operation.

Rear Mounted, Removable Meat Grip Arm: Rear mounted grip is high strength thermoplastic. Swings out of way when not in use.

Electrical Specification: 120/60/1; 5.6 Amps.

Switch: Moisture protected push button switch.

Cord & Plug: 6-foot, three-wire power supply cord and plug. Plug not furnished on export models.

Capacity: The carriage will take food up to 12" in width or 7.5" in diameter.

Gauge Plate: Gauge plate is a heavy aluminum extrusion with machined grooves for smooth feeding. Adjustable to cut any thickness of slice up to 1".

Warranty: All parts and service coverage for one year including knife. Lifetime guarantee on Borazon stones in the sharpening system.

Shipping Weight: 142 lbs.

HOBART
701 S Ridge Avenue, Troy, OH 45374
1-888-4HOBART • www.hobartcorp.com

DETAILS AND DIMENSIONS

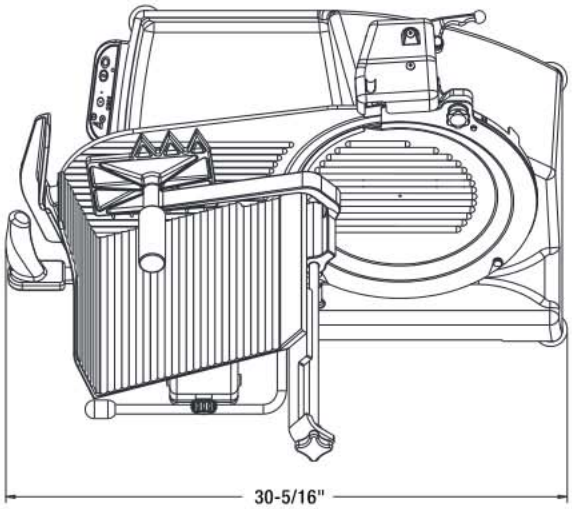

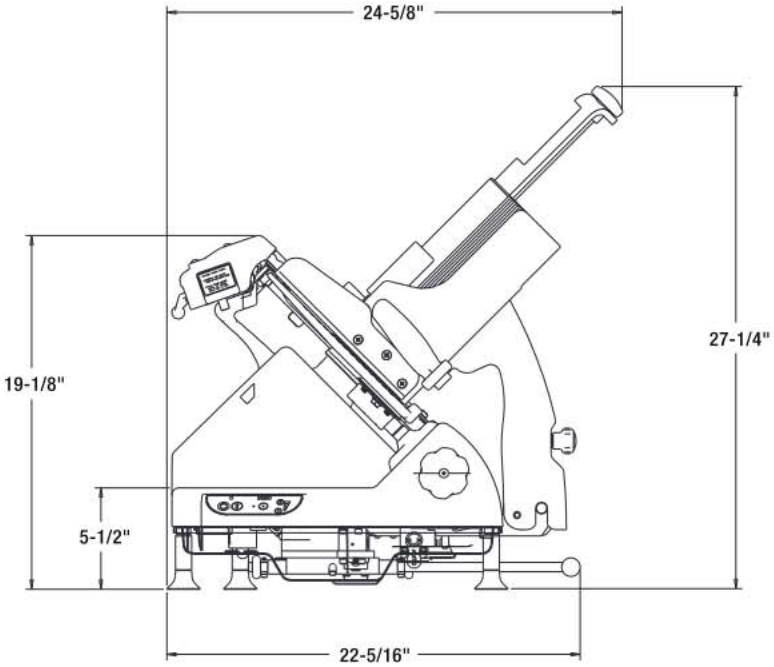

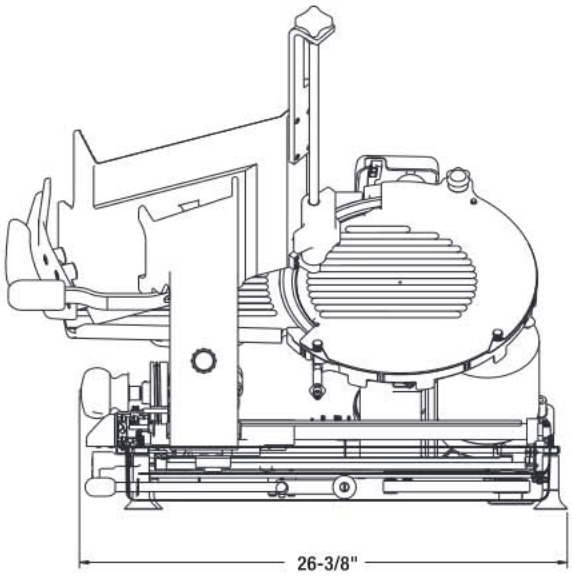

As continued product improvement is a policy of Hobart, specifications are subject to change without notice.

LITHO IN U.S.A. (H-01)
Printed On Recycled Paper