RFP

City of Pawtucket
City of East Providence

REQUEST FOR PROPOSALS

16-019
LED Streetlight Conversion

Table of Contents

1.0 Bid/Solicitation Information

2.0 Instructions and Notifications to Bidders

3.0 Overview

4.0 Scope of Work

5.0 Insurance

6.0 Acknowledgement of Risk and Hold Harmless Agreement

7.0 Additional Insurance Requirements

8.0 Proposal Content and Organization

9.0 Evaluation Criteria

10.0 Miscellaneous

11.0 Bid Form

Appendix A Anti-Kickback Acknowledgement

Appendix B City of Pawtucket Purchasing Rules and Regulations and Terms and Conditions of Purchase

Appendix C Narragansett Electric Co. (National Grid) Guidelines for Customer-Owned Street Lighting Installation and Maintenance replacement

Appendix D Customer-Owned Streetlight Equipment Standards

Appendix E Specification for LED Luminaires

Appendix F Smart City Platform Requirements

Appendix G City of Pawtucket

G1 Pawtucket Streetlight Inventory

G2 Pawtucket Decorative Lighting Inventory

G3 Pawtucket Price Proposal Form

Appendix H City of East Providence

H1 East Providence Streetlight Inventory

H2 East Providence Price Proposal Form

Appendix I Sample Services Price Agreement

The sample Services Price Agreements is the standard Price Agreement for these services and will be used as a result of this RFP process.

1.0 - Bid/Solicitation Information

Schedule

Pre-Bid/Proposal Conference: ☐ No ✕ Yes

October 17, 2016 @ 10:00 AM

******* Strongly Recommended *******

Location:

Pawtucket City Hall
137 Roosevelt Ave.
Pawtucket, RI 02860
Room: City Council Chambers – 3rd Floor

Requests for Further Information:

October 21, 2016 at 10:00 AM

Requests for information or clarification must be made electronically to the attention of:

David Clemente - Purchasing Agent
E-mail: dclemente@pawtucketri.com

Please reference the RFP / LOI number on all correspondence. Answers to questions received, additional information and other changes, if any, will be posted on the Internet as an addendum to this bid solicitation on the state bidding site (http://www.purchasing.ri.gov/) and on the City of Pawtucket's website (http://www.pawtucketri.com/purchasing).

RFP Submission Deadline:

November 10, 2016 at 10:00 AM

Late submittals will not be considered.

Proposals must be mailed or hand-delivered in a sealed envelope **marked with the RFP/Bid # and Project Name** to:

Pawtucket City Hall - Purchasing Office
137 Roosevelt Avenue
Pawtucket, RI 02860

Bonds/Surety Required

Surety Bond: ☐ No ✕ Yes

Bidder is required to provide a bid surety in the form of a bid bond or certified check payable to the City of Pawtucket and/or the City of East Providence (as appropriate) in an amount not less than five percent (5%) of the bid price.

Performance Bond: ☐ No ✕ Yes

Bidder is required to provide a performance bond or certified check payable to the City of Pawtucket and/or the City of East Providence (as appropriate) in an amount not less than one hundred percent (100%) of the bid price.

The successful bidder will be required to furnish all insurance documentation as outlined in the attached Purchasing Rules & Regulations and General Terms & Conditions of Purchase.

Miscellaneous

The bid process and resulting contract are subject to the Rules and Regulations and General Terms and Conditions of Purchase. Submission of a bid in response to this

solicitation is acknowledgement and acceptance of these Rules and Regulations and General Terms and Conditions of Purchase.

The City of Pawtucket and the City of East Providence, hereinafter referred to as the Cities, each reserve the right to award on the basis of cost alone, accept or reject any or all bids, and to act in their own best interest including, but not limited to, directly negotiating with any vendor who submits a proposal in response to this RFP and to award a contract based upon the results of those negotiations alone. Proposals found to be technically or substantially non-responsive at any point in the evaluation process will be rejected and not considered further. The Cities may, each at their sole option, elect to require presentations(s) by bidders clearly in consideration for award.

2.0 - Instructions and Notifications to Bidders

- It is the vendor's responsibility to examine all specifications and conditions thoroughly, and comply fully with specifications and all attached terms and conditions. Vendors must comply with all Federal, State, and City laws, ordinances and regulations, and meet any and all registration requirements where required for contractors as set forth by the State of Rhode Island. Failure to make a complete submission as described herein may result in a rejection of the proposal.
- All costs associated with developing or submitting a proposal in response to this Request, or to provide oral or written clarification of its content shall be borne by the bidder. The Cities assume no responsibility for these costs.
- A submittal may be withdrawn by written request to the Purchasing Agent by the proposer prior to the stated RFP deadline.
- Prior to the proposal deadline established for this RFP, changes may be made to a proposal already received by the City if that vendor makes a request to the Purchasing Agent, in writing, to do so. No changes to a proposal shall be made after the RFP deadline.
- Proposals are considered to be irrevocable for a period of not less than ninety (90) days following the opening date, and may not be withdrawn, except with the express written permission of the Purchasing Agent. Should any vendor object to this condition, the vendor must provide objection through a question and/or complaint to the Purchasing Agent prior to the proposal deadline.
- All pricing submitted will be considered to be firm and fixed unless otherwise indicated herein.
- The vendor has full responsibility to ensure that the proposal arrives at the Purchasing Division Office prior to the deadline set out herein. The City assumes no responsibility for delays caused by the U.S. Postal Service or any other delivery service. Postmarking by the due date will not substitute for actual receipt of response by the due date. Proposals arriving after the deadline may be returned, unopened, to the vendor, or may simply be declared non-responsive and not subject to evaluation, at the sole discretion of the Purchasing Agent. **For the purposes of this requirement, the official time and date shall be that of the time clock in the City of Pawtucket's Purchasing Office.**

- It is intended that an award pursuant to this Request will be made to a prime contractor, who will assume responsibility for all aspects of the work. Joint venture and cooperative proposals will not be considered, but subcontracts are permitted, provided that their use is clearly indicated in the bidder's proposal, and the subcontractor(s) proposed to be used are identified in the proposal.
- Bidders are advised that all materials submitted to the City of Pawtucket for consideration in response to this Request for Proposals shall be considered to be public records as defined in Title 38 Chapter 2 of the Rhode Island General Laws, without exception, and may be released for inspection immediately upon request once an award has been made.
- Vendors are responsible for errors and omissions in their proposals. No such error or omission shall diminish the vendor's obligations to the Cities.
- The Cities reserve the right to reject any or all proposals, or portions thereof, at any time, with no penalty. The Cities also have the right to waive immaterial defects and minor irregularities in any submitted proposal at its sole discretion. All material submitted in response to this RFP shall become the property of the City of Pawtucket upon delivery to the Purchasing Agent.
- There is no official, public opening of proposals. The City asks that companies refrain from requesting proposal information concerning other respondents until an intention to award is determined, as a measure to best protect the solicitation process, particularly in the event of a cancellation or re-solicitation. Proposal materials become public information <u>only after a contract is awarded.</u>
- Each City retains the right to cancel their participation in this Solicitation at any time prior to the execution and approval of a Contract. If this Solicitation is canceled by both Cities, all Proposals received in response to this RFP will be rejected. All proposal preparation costs remain the responsibility of the Contractor.
- The Cities shall be under no obligation to return any proposals or materials submitted by a Contractor in response to this RFP.
- It shall be the respondent’s responsibility to ask questions, request changes or clarifications, or otherwise advise the municipality Representative if any language, specifications or requirements of an RFP appear to be ambiguous, contradictory, or appear to inadvertently restrict or limit the requirements stated in the RFP to a single source. Questions and requests for clarification regarding this RFP must be directed in writing within the allowable timeframe, via email, to the contact person listed on the cover page of this RFP.

  Every attempt shall be made to ensure that the proposer receives an adequate and prompt response. However, in order to maintain a fair and equitable RFP process, all respondents will be advised, via the issuance of an addendum to the RFP, of any relevant or pertinent information related to the procurement.

  Such addenda will be posted as detailed on the cover page. Failure of the respondent to receive or obtain such addenda shall not excuse the respondent from compliance therewith if awarded the Price Agreement.

3.0 - Overview

The Cities of Pawtucket and East Providence are seeking Statements of Qualifications and Proposals to provide a turnkey project to 1) convert existing municipal-owned streetlights to LED with an option for smart controls or photocells and 2) provide warranty and non-warranty maintenance services following the conversion.

Conversion project elements include creating a comprehensive streetlight inventory, developing a lighting plan and installing lighting samples in each City for review and approval, removing and disposing of the existing luminaires, installing City-approved LED luminaires on poles included in the streetlight inventory, installing in-line fuse disconnects, labeling streetlight poles, as appropriate, providing warranty services, and applying for available incentives. Additional streetlight/outdoor lighting work, including but not limited to conversion of decorative streetlights not listed on the National Grid streetlight inventory (Appendices G1 and H1) may be negotiated as part of this contract.

Maintenance services will include all services necessary to keep the streetlights in good working condition including warranty, routine and emergency repairs, coordination activities and call center operations. Maintenance on additional decorative lights as well as other incidental work may be negotiated as part of this contract.

The Cities may select the same Contractor or different Contractors, based on the evaluation processes and in accordance with their best interests as described herein.

Prospective firms must provide a complete response addressing all the requirements of this RFP. It shall be the respondent's responsibility to ask questions, request changes or clarifications, or otherwise advise the municipality Representative if any language, specifications or requirements of an RFP appear to be ambiguous, contradictory, or appear to inadvertently restrict or limit the requirements stated in the RFP to a single source. Questions and requests for clarification regarding this RFP must be directed in writing within the allowable timeframe, via email, to the contact person listed on the cover page of this RFP.

4.0 - Scope of Work

1.0 GENERAL AND TECHNICAL REQUIREMENTS

All data regarding the streetlights is based on data provided by National Grid; and is to be verified as part of this project. The Cities are not responsible for inaccuracies in the original National Grid inventory. Please see Appendices C and D for additional information provided by National Grid.

The Contractor(s) shall comply with applicable environmental laws and regulations regarding handling of hazardous substances, and shall take appropriate measures to ensure the safe handling of such substances as Contractor(s) may encounter in the performance of the approved Contract(s).

The project will be "No Waste", i.e. all equipment will be removed and properly recycled in accordance with all applicable laws and regulations. All disposal costs shall be borne by the Contractor. The Contractor will provide copies of disposal documentation to each City, and will keep copies on file as required by law.

2.0 CONTRACTOR'S MINIMUM QUALIFICATIONS

Anyone working above the communication space on utility poles or within electric distribution enclosures shall be electrically qualified as defined by OSHA 1910.269 (hereinafter "Qualified Electrical Worker"). *Customer personnel or Qualified Electrical Workers are never allowed to enter a Company manhole, handhole, or other enclosed electrical equipment for any reason without the Company's safety supervision personnel being present on site.*

By submitting a Price Proposal the Proposer is certifying that all electricians who would perform work under the Price Agreement are Qualified Electrical Workers as described above.

3.0 PURCHASE AND STORAGE OF GOODS AND MATERIALS

The Contractor shall purchase and provide LED luminaires and controls, as specified in an approved Price Proposal for the specific road classification and/or application, controls, luminaire arms, in-line fused disconnects (see Appendices C and D), fuses as needed, daily report forms, and wiring for this work. The Contractor shall also maintain an inventory or have readily available a supply/supplier of luminaires, smart controls, photo cells, or other parts that are routinely used for during warranty repairs in order to perform these repairs in timely fashion.

The Cities will provide at no cost a central storage and staging area where LED luminaires and other materials may be delivered, stored, picked-up and prepared for installations, and also where the Contractor may deposit the removed luminaires and materials into contractor-provided recycling storage bins. The Contractor shall have reasonable access to the stored goods and materials. Details about the hours of access will be finalized after the Contractor is selected. Alternatively, the Contractor may provide staging areas.

4.0 RESPONSIBILITIES OF THE CONTRACTOR DURING LED CONVERSION

This is to be a turnkey project. The selected Contractor(s) shall provide all labor, equipment, materials, permits and incidental work necessary to completely remove and properly dispose of the existing luminaires and replace them with new LED luminaires with smart controls, if controls are approved by that City. This work will be performed on streetlights listed in the attached National Grid Streetlight Inventories (Appendices G1 and H1), which are to be verified and updated as part of the project. Additional streetlight and/or decorative fixtures may be added with an approved change order, as noted in the Proposal Terms and Conditions.

In addition, the Contractor shall meet all other requirements of this RFP such as creating a comprehensive streetlight inventory database, developing a lighting plan, and installing lighting samples for the Cities to review and approve, installing in-line fuse disconnects as required by National Grid, labeling streetlight poles, providing commissioning services (as appropriate), training, providing warranty services, and applying for available incentives from National Grid, the Office of Energy Resources, and/or other sources.

The Contractor shall perform these tasks as described in this RFP including those listed below, and shall work closely with designated municipal personnel to accomplish these goals. Work under the Price Agreement must be performed by Qualified

Electrical Workers, as described herein. The work performed, as described below, shall comply with the *Customer-Owned Streetlight Equipment Standards* (Appendix D)**.**

Work will be scheduled on a block-by-block basis in geographic succession using maps provided by the Contractor that will depict the replacement schedule by area. Scheduling is subject to approval by each City's Project Manager or designee.

The Contractor will coordinate and provide maps and database listings (utilizing the streetlight inventory in Appendices G1 and H1) of the pole locations where the Contractor will be performing LED replacements.

The Contractor shall use handheld devices to update the streetlight data and maps (such as Trimble or other equivalent device as approved by each City) for the duration of the Contract.

The Contractor shall complete project reports described herein and will meet all applicable federal, state, utility, and municipal rules, regulations, and requirements, including having Qualified Electrical Workers conduct LED streetlights replacement and installation of smart controls.

LED Installation - The work involves removing an existing luminaire and photocell, repairing a pole and arm as necessary, installing a new LED luminaire, photocell with wireless smart controls as appropriate, and fuse block while repeating the process until all of the identified luminaires are replaced. The installations should be completed within four (4) months, and in no case longer than six (6) months, of the start date.

All LED luminaires will be installed according to the manufacturer's instructions. After replacing the existing luminaire with the new LED luminaires the Contractor will test operation of the streetlights. Work includes, but may not be limited to:

A. Coordinate and schedule any needed power disconnections and reconnections with National Grid if any defective wire is discovered on a pole, as appropriate.
B. Coordinate traffic control with each City Police Department, as necessary.
C. Identify the pole location and verify map and pole number; update database with equipment installed, date, latitude and longitude for GPS coordinates, and other information, as needed.
    - If luminaire arm is missing or defective, make a note and report to municipal representative and skip to the next location.
    - If a luminaire is on a Utility pole but not on the inventory list, make a note to report to municipal representative.
D. Affix Ownership Identification Label (to be provided by the Contractor) prior to installation in accordance with National Grid requirements.
E. Prepare LED luminaire and control for installation. Scan LED luminaire bar code.
F. Perform safety check:
    - Check the secondary power lines (triplex) to determine the best approach for the luminaire and luminaire arm installation.
    - Check tree/vegetation. If tree /vegetation is obstructing the streetlight, trim branches as necessary to complete the installation; note work done in daily report form.

- Check utility supply wire to the streetlight ensuring the drip loop is not touching any other wires or equipment. If touching other equipment make adjustment if necessary; note work done in daily report form.

G. Check luminaire arm for structural integrity (e.g., if bolts are loose tighten the bolts). If luminaire arm and/or wind rod is damaged or non-repairable make a note to report to appropriate municipal representative and skip to the next location.
H. Check line voltage to the luminaire; update database if necessary.
I. Remove existing luminaire.
J. Complete installation of fused disconnect device as described below and per instructions below and in Appendices C and D.
   - Install inline fused disconnect and cover on streetlight-only pole if power is fed overhead.
   - Install inline fused disconnect and cover in underground streetlight-only pole handhole or in junction box, following approval and under supervision of the Utility.
K. Install LED luminaire and Controls as specified in Contract.
L. Confirm successful operation of the luminaire and Control.
M. Note wattage of removed luminaire and LED replacement model, as well as pole number and street name for each. Prepare and store removed luminaire for recycling
N. Utilize a main vehicle (a properly equipped bucket truck) equipped with Type D Arrow Board for mobile operation.
O. Comply with applicable environmental laws and regulations regarding handling of hazardous substances, and take appropriate measures to ensure the safe handling of such materials as may be encountered in the performance of the Contract.

Electric System Separation - The Contractor will be responsible for creating a physical electrical separation between National Grid's secondary conductors and the municipal-owned street and area light conductors. This fused disconnect device is required to be installed at the time of conversion to LED on Utility-owned poles.

The separation is accomplished by installing a fused disconnect device (e.g., an in-line fuse holder capable of utilizing a midget cartridge style fuse on every street and area light supply located as near as possible to the connection to the National Grid-owned secondary conductors). National Grid will permit the Cities to install the disconnect devices on existing street light locations in an energized condition using Qualified Electrical Workers, which will include the disconnecting of the existing energized supply conductor source to the streetlight luminaire. This should not require a visit from the Company to de-energize or re-energize the streetlight source at the service connection.

The purpose of the fused disconnect device, in addition to providing electrical protection, is to serve as a disconnect point for the municipal-owned streetlight. Once installed, the Cities' Qualified Electrical Workers may disconnect or reconnect a customer-owned street light(s) using the fuse device to perform maintenance or other equipment per Narragansett Electric Co. (National Grid) Guidelines for Customer-Owned Street Lighting Installation and Maintenance replacement (Appendix C).

For underground customer circuit applications, the Contractor shall locate the disconnect device within an enclosure installed and owned by the municipality and located in close proximity to the designated service connection location within the enclosed National Grid facility. However, optimum location for the disconnect device is within an enclosure installed and owned by the municipality and located in close proximity to the designated service connection location within the enclosed company facility. However, at a minimum for existing streetlight installations only, the disconnect device can be located within the base of the first street light standard closest to the circuit's service connection.

If it is found that the existing street light conductors are defective, corroded, or burned, or the circuits are insufficient, National Grid will allow the Qualified Electrician to install a #10 AWG wire of sufficient length, and will allow the municipality to make the permanent connections to National Grid's secondary wiring loop using the appropriately material and sized connectors per the National Grid's Customer-Owned Streetlight Equipment Standards (Appendix D).

Traffic Controls - The Contractor shall submit a traffic control plan for approval by the municipality prior to authorization to proceed with the work. The traffic control plan shall stipulate the streets where police are required for traffic control at work zones due to traffic volume and/or safety concerns.

The Contractor shall provide and maintain such signs, barricades and warning lights as are necessary to warn and protect the public at all times if affected by work operations. Contractor shall arrange for police traffic patrols with the Police Department, in accordance with the approved traffic control plan.

The cost of police details shall be covered by the Cities, not the Contractor.

Contractor shall conduct operations so as to cause the least possible obstruction and inconvenience to public traffic. Contractor shall maintain and make available to the Cities, a local telephone number and website where they can be contacted twenty-four hours per day.

Payment for LED Conversion - The LED installation process will be paid according to the final approved Price Proposal form and based on actual quantities as verified in the field. All streetlight work is subject to approval by each City's Project Manager or designee prior to payment authorization.

5.0 MAINTENANCE RESPONSIBILITIES OF THE CONTRACTOR FOLLOWING CONVERSION

The Contractor(s) shall provide warranty and non-warranty maintenance services for each light fixture once converted to LED. Additional streetlight and/or decorative fixtures may be added by an approved change order, as noted in the Proposal Terms and Conditions.

Incidental related work shall include (but may not be limited to), as needed: required coordination with the Utility for work in Utility's manhole, handhole, or other enclosed electrical equipment (Appendices C and D); traffic control coordination; safety checks; installation of photoelectric cells; verification of supply voltage; verification and updates to a streetlight database; branch trimming as needed to complete removal or installation of streetlights, and recycling/disposal services for existing luminaires,

lamps and miscellaneous materials. In addition, the Contractor may be called upon for other work, such as (but not limited to): removal and/or installation of luminaire arm; replacement or installation of span wires between city-owned poles, and/or adjustments to line wire.

Warranty Services - All parts and labor shall be covered under warranty as described in Section 8.

Routine Maintenance - As part of routine maintenance, the Contractor will be responsible for responding to outages reported by the City such as replacement of failed lamps, ballasts, or other equipment, repair of minor wiring issues, replacement of broken covers, and other failures/issues that occur under warranty or as a result of age and normal deterioration.

Routine maintenance will be performed within five (5) business days of notification, weather permitting. The Cities reserves the right to add a penalty provision in the contract for non-performance. Routine maintenance includes all of the streetlight repairs that are communicated by the municipalities to the Contractor by the close of any business day.

The selected Contractor shall maintain an inventory or have readily available a supply/supplier of smart controls, photo cells, lamps, ballasts and other equipment that is routinely used for these repairs in order to perform the repairs in the timeframes required.

Emergency Repair Service - Emergency service shall be provided by the Contractor twenty-four hours per day, seven days per week to make immediate or temporary repairs to City-owned series and multiple street light pole or service knock downs or damage caused by vehicle collision, acts of God, vandals, or as required because of a public safety hazard.

Emergency calls must be authorized by the City's designated point of contact or their designee unless otherwise specified. When so authorized, the Contractor shall dispatch a high voltage technician and equipment. Response time shall be less than two hours under normal circumstances.

Contractor shall conduct operations so as to cause the least possible obstruction and inconvenience to public traffic. Contractor shall maintain and make available to the City, a local telephone number and website where they can be contacted twenty-four hours per day.

Additional Repair Service - In the event a pole and/or fixture needs to be replaced and/or additional poles or lights are requested, the Contractor shall submit a quote via email to the applicable municipal representative for approval.

Upon approval, the Contractor shall proceed with the replacement. The Cities reserve the right to obtain quotes from and award this additional repair work to other contractors if the City deems the Contractor’s fees or duration of replacement to be excessive.

The successful Contractor will be expected to note then report to the City representative any outages found in the process of responding to a streetlight maintenance request.

Call Center Operations - The Contractor shall maintain a Call Center where residents and City staff may report outages and other issues and which enables

the Contractor to meet the emergency and non-emergency response times and other requirements of this RFP.

The Call Center is to be accessible twenty-four hours per day, seven days per week. It shall provide both on-line and phone access.

The Contractor shall, at a minimum, provide weekly reports detailing the services provided, calls received, urgency of the call, caller information (if available), nature of the repair and any other relevant information.

Special Requirements - Prospective firms submitting proposals shall have a minimum of three years' experience in the area of streetlight management and maintenance services. Anyone working above the communication space on utility poles or within electric distribution enclosures shall be electrically qualified as defined by OSHA 1910.269 (hereinafter "Qualified Electrical Worker"). Customer personnel or Qualified Electrical Workers are never allowed to enter a manhole, handhold, or any other enclosed electrical equipment owned by the utility company for any reason without the Utility's safety supervision personnel being present on site.

By submitting a proposal the Contractor is certifying that all electricians who would perform under the Price Agreement are Qualified Electrical Workers as described above.

Utility Coordination - The Contractor will be required to coordinate streetlight repair and maintenance activities with the utility where required. However, the Cities are interested in minimizing these costs to the extent practicable.

The procedure for securing assistance from the utility involves notifying and securing the approval of the City, followed by the direct scheduling of such assistance by the Contractor. The Contractor shall be responsible for following up with the utility on a weekly basis to determine the status of any outstanding work requests. If the utility has completed its work, and the streetlight is still not functioning, the Contractor shall return to finalize the repair. In the event of a scheduling change for any reason, the Contractor will be responsible for cancellation of any utility assistance. The Contractor will pay for any utility assistance that it fails to cancel in a timely fashion.

Protection Crew Costs - The Cities will be responsible for the cost of protection crews to the extent they are needed. The procedure for securing police detail assistance involves notifying and securing the approval of the City, followed by the direct scheduling of such assistance by the Contractor. In the event of a scheduling change for any reason, the Contractor will be responsible for cancellation of any police detail.

Reporting - The Contractor shall provide reports in spreadsheet format, preferably Microsoft Excel, outlining the following information: location of repair, pole number, adjacent street address, complaint number, date complaint received, date repair due, date of actual service, if repair has been turned over to utility and if so the work request number, and any other pertinent notes. The monthly reports shall include summary information in the monthly report, as requested by the City (e.g. total number of calls, average response time).

Other Assistance - At the City's request, the Contractor shall make itself available to attend City Council and other meetings in order to report on issues concerning the street-lighting system.

6.0 OTHER SERVICES

The Contractor should identify any other services that it will provide as part of the contract.

7.0 DELIVERABLES AND SCHEDULE

Deliverables shall be considered those tangible resulting work products that are to be delivered to the City such as the streetlight inventory, reports, draft documents, data, interim findings, drawings, schematics, training, meeting presentations, and final drawings.

The following deliverables related to the LED conversion shall be provided on a daily, weekly, bi-weekly, monthly or other basis as needed, and shall include but not be limited to:

A. Daily report submitted at the beginning of the next work day, by fax or email as directed by the City detailing the number of streetlights removed, number of LED streetlights installed, number of poles skipped and reason why the poles were skipped, and any incident or situation and additional work that happened during the work day. The reports shall identify locations by street and pole number.

B. Monthly summary report detailing work completed for submission to National Grid.

C. Pay request will be on a monthly basis and will detail work performed per line item as specified in the Price Agreement and any negotiated work performed during that time.

D. Access to the inventory database, as appropriate.

The following deliverables related to the post-conversion maintenance shall be provided on a weekly, bi-weekly, monthly or other basis as needed, and shall include but not be limited to:

A. Call center reports
B. Monthly summary of outages and/or other issues reported along with the associated repairs and/or other remedial actions implemented.
C. Other standard reports as may be appropriate.

8.0 WARRANTY/PERFORMANCE BOND

The Contractor represents and warrants that:

A. They will perform all Services set forth herein in a good and workmanlike manner, in conformance with the Specifications and requirements of the approved Contract, and in accordance with the highest applicable professional and/or industry standards;

B. Each of their employees, subcontractors, and others assigned to perform Services have the proper skill, training, and background to be able to perform Services in a competent, timely, and professional manner and that all Services shall be so performed; and

C. They will, at all times during the term of an approved Contract, maintain and keep current all licenses and certifications required to perform the work set forth in the Contract.

Warranty work shall have at a minimum a one-year (1-year) workmanship warranty period from the date of its completion and acceptance by the City. The manufacturer's warranty for the LED luminaires and controls shall be at least 10 years. Contractor shall submit completed original Manufacturer warranty documentation, issued to the appropriate City, prior to acceptance of the work.

The 1-year and 10-year warranty periods for all equipment will begin upon final acceptance of the entire project for each City, not on the install date of each individual piece of equipment.

Contractor shall make all necessary repairs and replacements to remedy any and all defects, breaks, or failures of the Work occurring within the workmanship warranty period. Such repairs and replacements shall conform to the specifications under which the Contractor originally performed the work. The City shall notify the Contractor if such problems occur within the 1-year period. Contractor shall also repair any damage or remedy any disturbance to property or improvements if caused by the Contractor's work and if the damage or disturbances occurs within the warranty period. If Contractor performs warranty work, the warranty work also shall have a 1-year workmanship and 10-year materials warranty period from the date of its completion and acceptance by the municipality.

The City will provide the Contractor with written Notice of the need to perform warranty work unless it is determined that an emergency exists, that delay would cause serious additional loss or damage, or if any delay in performing the work might cause injury to any member of the public. If the Contractor, after written Notice, fails within 10 days to comply with the municipality's request, the municipality has the right to perform the warranty work either by hiring another Contractor or by using its own forces. In that event, the Contractor and its Surety shall be liable to the municipality for the cost of the work performed and any additional damage suffered by the City.

Emergency work must be authorized by the City's designated point of contact or their designee. When so authorized, the Contractor(s) shall dispatch a high voltage technician and equipment. Response time shall be less than two hours under normal circumstances.

9.0 PERIOD OF PERFORMANCE

CONVERSION

The project schedules (subject to change) anticipate a Price Agreement start date no earlier than December 1, 2016 and a substantial completion date six months later. The initial term of this Price Agreement shall begin on the Effective Date and shall expire one (1) year later unless terminated sooner as provided herein. The Parties may agree, by mutual consent, to extend the Price Agreement for an additional one (1) year.

MAINTENANCE

The effective date will be upon completion of the LED conversion project. The initial term of this Price Agreement shall begin on the Effective Date and shall expire three (3) years later unless terminated sooner as provided herein. This contract will be for

an initial 3-year period with two additional one-year extensions at each City's sole discretion.

The additional two (2) years may be taken individually or in multiple years with the same terms and conditions. At least sixty (60) days prior to the expiration of the initial term, or extension, the Parties shall commence discussions if they desire to extend the Price Agreement. The Contractor shall provide a written extension proposal within fifteen (15) calendar days following the municipality's request for such a proposal. However, nothing binds or requires either Party to extend this Price Agreement. The total term of this Price Agreement shall not exceed five (5) years.

10.0 WORK PERFORMED BY THE CITIES

Municipal staff shall make available sufficient hours of staff personnel as is required to meet with the Contractor and provide such information as required.

The Cities have assigned the following personnel to this project:

- Pawtucket - TBD
  Steve Coutu, P.E., Director of Public Works
  Scoutu@cityofeastprov.com
  (401) 435-7500 x40020

The Cities will perform the following other specific duties:

- Inspections and monitoring of the project.
- Provide instruction and direction for additional work that the Contractor might perform.
- Cover the cost of police detail, in accordance with the City-approved traffic control plans.

11.0 PLACE OF PERFORMANCE

The work will be performed on poles as depicted in Appendices G1 and H1 and as otherwise negotiated by each City. The Cities reserve the right to add to the Price Agreement additional sites, such as but not limited to municipal parking lots and other lighting on municipal properties not listed in Appendices G1 and H1, on a time and materials cost basis.

12.0. PUBLIC SAFETY

Contractor shall comply with the following security requirements:

- Work performed on all poles must be in compliance with the applicable requirements of OSHA, and shall ensure all such work is performed by a Qualified Electrical Worker.
- Work in Utility's manhole, handhole, or other enclosed electrical equipment shall be performed in coordination with and under the supervision of the Utility as per Appendices C and D.
- Temporary traffic control based on municipally approved traffic control plans.

Locations with limited access include the following:

- Some streets may be off limits during holidays.

13.0 USE OF SUBCONTRACTORS

The Contractor must identify any subcontractors that will be used on this project and describe the contractual arrangement that will exist with all subcontractors. The Contractor will be considered the prime Contractor and will be fully responsible for the performance of all services, qualifications and licensing of all workers, including the quality and timeliness of work performed by all subcontractors. The Cities reserve the right to, at their sole discretion, approve or reject proposed subcontractors.

5.0 - Insurance

The vendor shall maintain and keep in force such comprehensive general liability insurance as shall protect them from claims which may arise from operations under any contract entered into with each City, whether such operations be by themselves or by anyone directly or indirectly employed by them.

The amounts of insurance shall be not less than $1,000,000.00 combined single limit for any one occurrence covering both bodily injury and property damage, including accidental death.

The City of Pawtucket and/or The City of East Providence shall be named as additional insured on the vendor's General Liability Policy, as appropriate.

The vendor shall maintain and keep in force such Workers' compensation insurance limits as required by the statutes of the State of Rhode Island, and Employer's Liability with limits no less than $500,000.

6.0 - Acknowledgement of Risk & Hold Harmless Agreement

In addition to the indemnity provisions in the these Terms and Conditions of Purchase and to the fullest extent permitted by law, the selected vendor, its officers, agents, servants, employees, parents, subsidiaries, partners, officers, directors, attorneys, insurers, and/or affiliates (Releasors) agree to release, waive, discharge and covenant not to sue the City of Pawtucket, the City of East Providence, their officers, agents, servants or employees (Releasees) from any and all liability, claims, cross-claims, rights in law or in equity, agreements, promises demands, actions and causes of action whatsoever arising out of or related to any loss, damage, expenses (including without limitation, all legal fees, expenses, interest and penalties) or injury (including death), of any type, kind or nature whatsoever, whether based in contract, tort, warranty, or other legal, statutory, or equitable theory of recovery, which relate to or arise out of the Releasors use of or presence in and/or on City of Pawtucket and/or City of East Providence property. The Releasors agree to defend, indemnify and hold harmless the Releasees from (a) any and all claims, loss, liability, damages or costs by any person, firm, corporation or other entity claiming by, through or under Releasors in any capacity whatsoever, including all subrogation claims and/or claims for reimbursement, including any court costs and attorneys fees, that may incur due to Releasors use of or presence in and on City of Pawtucket and/or City of East Providence property; and (b) any and all legal actions, including third-party actions, cross-actions, and/or claims for contribution and/or indemnity with respect to any claims by any other persons, entities, parties, which relate to or arise out of Releasors use of or presence in and on City of Pawtucket and/or City of East Providence property.

The Releasors acknowledge the risks that may be involved and hazards connected with use of or presence in and on City of Pawtucket and/or City of East Providence property but elect to provide services under any contract with the City(s) with full knowledge of

such risks. Releasors also acknowledge that any loss, damage, and/or injury sustained by Releasors is not covered by Releasees insurance. Releasors agree to become fully aware of any safety risks involved with the performance of services under any contract with the City of Pawtucket and/or the City of East Providence and any safety precautions that need to be followed and agree to take all such precautions.

The duty to indemnify and/or hold the Cities harmless shall not be limited by the insurance required under the these Terms and Conditions of Purchase.

7.0 - Additional Insurance Requirements

In addition to the insurance provisions in the these Terms and Conditions of Purchase, the liability insurance coverage, except Professional Liability, Errors and Omissions or Workers' Compensation insurance required for performance of a contract with the City of Pawtucket and/or the City of East Providence shall include the City of Pawtucket and/or the City of East Providence, its divisions, officers and employees as Additional Insureds but only with respect to the selected vendor's activities under the contract. The insurance required through a policy or endorsement shall include:

A. a Waiver of Subrogation waiving any right to recovery the insurance company may have against the City or Cities; and

B. a provision that the selected vendor's insurance coverage shall be primary with respect to any insurance, self insurance or self retention maintained by the Cities and that any insurance, self insurance or self retention maintained by the Cities shall be in excess of the selected vendor's insurance and shall not contribute.

There shall be no cancellation, material change, potential exhaustion of aggregate limits or non-renewal without thirty (30) days written notice from the selected vendor or its insurer(s) to the City(s)' Purchasing Agent. Any failure to comply with the reporting provision of this clause shall be grounds for immediate termination of the contract with that City.

Insurance coverage required under the contract shall be obtained from insurance companies acceptable to the Cities. The selected vendor shall pay for all deductibles, self-insured retentions and/or self-insurance included hereunder.

The City(s)' Purchasing Agents reserve the right to consider and accept alternative forms and plans of insurance or to require additional or more extensive coverage for any individual requirement.

8.0 - Proposal Content and Organization

By submitting a response, the Proposer is accepting the General Instructions and Conditions of this RFP.

The Proposer must provide all information and follow the format outlined in this Request for Proposal (RFP). Additional materials in other formats, or pages beyond the stated page limit(s) may not be considered. The Cities may reject as non-responsive at their sole discretion any proposal or any part thereof, which is incomplete, inadequate in its response, or departs in any substantive way from the required format. Proposal responses shall be organized in the following manner:

A. Cover Letter
B. Table of Content

C. Description of Firm and Experience
D. Project Team and Equipment
E. Project Approach and Understanding - Conversion
F. Project Approach and Understanding - Post-Conversion Maintenance
G. Proposed LED Luminaires and Controls including Manufacturer Warranties and Cut-Sheets
H. Sealed Bid Form

8.A COVER LETTER

The Cover Letter must state the name of the person(s) authorized to represent the Proposer in any negotiations, the name(s) of the person(s) authorized to sign any contract that may result, the contact person's name, mailing or street addresses, phone and fax numbers and email addresses.

A legal representative of the successful firm, authorized to bind the firm in contractual matters must sign the Cover Letter and the Proposal response.

8.B TABLE OF CONTENTS

Please provide a *Table of Contents* after the Cover Letter giving a clear identification by section and page number. Such sections will be those listed below.

8.C DESCRIPTION OF FIRM AND EXPERIENCE (Maximum Points – 15)

1. Describe your firm's legal structure, areas of expertise, length of time in business, number of employees, and other information that would be helpful in characterizing the firm. Describe the firm's internal procedures and/or policies associated or related to work quality and cost control. Describe the resource availability, which may include the various levels of experience of the personnel to be provided and vehicles and equipment to be used, to perform the work for the duration of the project. Describe your firm's workforce, including the prior experience of all qualified certified journeyman linemen on staff, who are capable of performing as Qualified Electrical Workers as described in this RFP. Provide the address of the firm's home office and the address of the office that will manage the project, if applicable. Provide the same information for any subcontractors to be utilized on the project.

2. Briefly describe other engagements by your firm that demonstrate relevant experience and that best characterize the firm's capabilities, work quality, and cost control. Provide references that include three (3) previous municipalities or other government agencies for which similar LED conversion work was performed and (3) previous municipalities or other government agencies for which similar maintenance work was performed. Include the project manager's name, address, email address and phone number *Please remember that any extensive descriptions or vaguely related projects are discouraged and may negatively impact the overall outcome of the evaluation. References may be called and their responses used in the evaluation process.*

3. Describe your firm's familiarity and experience working with utility and other incentive programs.

8.D PROJECT TEAM AND EQUIPMENT (Maximum Points – 15)

1. Provide the approximate number of people and how many crews will be assigned to the LED conversion and maintenance sections of this project. Provide crew make-up and crewmember qualifications and experience on similar or related projects:
   - Names of key team members, including those of any subcontractors, who will be performing the work on this project, and:
     - their responsibilities on this project
     - current assignments and location
     - experience on similar or related projects
     - unique qualifications
     - percentage of their time that will be devoted to the project.

   Proposers must notify and receive approval of the City of any changes to proposed subcontractors.
2. Provide a list and descriptions of the vehicle(s) and equipment to be used including important features such as the main vehicle (bucket truck) which is equipped with Type D Arrow Board for mobile operation.
3. Provide an overview of the call center operations including location, staffing and oversight.

8.E PROJECT APPROACH AND UNDERSTANDING - LED CONVERSION (Maximum Points – 25)

Provide a narrative description of how the firm proposes to replace the City's inventory of Utility and municipal-owned streetlights with LED streetlights and smart controls. The conversion should be completed within four (4) months, and in no case longer than six (6) months, of the start date. Your firm should rely on its expertise and experience with similar projects to demonstrate how it will effectively complete the proposed project. The narrative should describe your firm's overall approach to the project including but not necessarily limited to the following elements:

1. Describe the type of handheld device to be used by your crews to update the streetlight database as the conversion to LEDs, perhaps with controls, is completed. Describe how you will furnish and utilize hand-held devices in the field to verify and update the municipalities' streetlight databases as the work progresses. Specify the type of device to be used and explain how the device will interface with and update the streetlight databases. Explain how you will format the databases as needed to work with the handheld devices and to have data available to the City through Excel or other approved software. Explain how you propose to work with maps to track progress. Explain how you will share the database, train municipal representative(s), and report monthly progress to National Grid.
2. Describe storage and staging areas you will require during the project. You may include a discussion of how your firm will make personnel adjustments if project goals and standard are not being attained. Provide a short description of how traffic control will be handled on residential streets and on arterial streets.
3. Describe how you will work with the City to develop a lighting plan and to

determine light color and quantity of light. Describe your process for choosing and installing sample lighting for visual review (a pilot).

4. Describe your firm's safety policies and procedures as they relate to handling high-pressure sodium lamps and other hazardous items. How are employees directed to deal with broken lamps? What precautions are taken to prevent damage to lamps during luminaire removal and transport? Do the procedures specifically address handling high-pressure sodium lamps and other types, including mercury vapor lamps, in public areas or in environmentally sensitive areas? Describe your firm's environmental spill or release response procedures and training in general and specifically as they would apply to the materials to be handled for this project and the firm's equipment that will be used.
5. Provide a Proposed Project Schedule to complete the work within the required timeframe as described in this RFP.
6. Describe how you propose to commission the control network including provision of commissioning reports. Describe your firms approach to training of municipal staff on the control software.
7. Include any other information you feel will be helpful in assessing your firms ability to meet the LED conversion requirements of this RFP.

8.F PROJECT APPROACH AND UNDERSTANDING - MAINTENANCE (Maximum Points – 25)

1. Describe in detail the services to be offered to meet the requirements of this RFP. Responses must include a clear explanation of warranty, routine, emergency, and additional maintenance definitions, scope and practices.
2. Describe Call Center operations including intake and response protocols for routine and emergency calls, reporting practices, etc.

8.G PROPOSED LED LUMINAIRES AND CONTROLS, INCLUDING MANUFACTURER WARRANTIES (Maximum Points – 15)

1. <u>LED Luminaires:</u>

   Proposed luminaires shall be eligible for National Grid and Office of Energy Resource incentives. They shall be Dark Sky-compliant, dimmable through the use of proposed smart controls, and meet the requirements described in Appendix E, *Specification for LED Luminaires*.

   Specify the LED luminaires proposed to replace the HPS MV, and/or other streetlights as depicted in the City Streetlight Inventory (Appendices G1 and H1) in your Price Proposal(s). Specify the manufacturer, model numbers, wattage and manufacturer's warrantees, and attach cut sheets for the proposed luminaires. Respondents may offer up to two (2) Price Proposals for different types of LED luminaires.

   If more than one Price Proposal is being offered, specify the manufacturer, model numbers, wattage and manufacturer's warrantees for each, organized as follows:

   - Proposal 1: Proposed Luminaires (preferred)
   - Proposal 2: Proposed Luminaires (optional)
2. <u>Smart Controls:</u>

Proposed controls shall meet the requirements described in Appendix F, Smart City Platform Requirements. Quoted controls should include all streetlights listed in the National Grid inventory (Appendices G1 and H1), be wireless, have dimming and WIFI capabilities as well as room for additional features.

Proposers are encouraged to offer up to two (2) types of smart controls with varying capabilities and prices, in order to provide the municipalities flexibility to select controls that best meet their needs. Describe the technical capabilities of each type of smart controls offered as options; include examples of their use in other communities, if applicable.

3. Photocell Option:

Proposers shall provide separate pricing for installation of long life photocells as an alternative to the installation of the full control options quoted above. Proposers may to offer up to two types of photocells if desired.

8.H REFERENCES (Maximum Points – 5)

8.I PRICE PROPOSALS (Maximum Points – 50)*

Complete Section 11, Bid Form and submit along with a Price Proposal for each City (Appendices G3 and H2) in a separate sealed envelope as per the instructions on the cover page of this RFP. If offering more than one price proposal, both proposals may be submitted in the same sealed envelope. Please submit one sealed envelope for each City.

9.0 - Evaluation Criteria

The evaluation of proposals will be conducted in a time frame convenient to the Cities.

The Cities reserves the right to award on the basis of cost alone, accept or reject any or all proposals, and to otherwise act in its best interest including, but not limited to, directly negotiating with any Supplier who submits a proposal in response to this RFP and to award a contract based upon the results of those negotiations alone. Further, the Cities reserve the right to waive irregularities it may deem minor in its consideration of proposals.

Proposals found to be technically or substantially non-responsive at any point in the evaluation process will be rejected and not considered further. The Cities may elect to require presentations(s) by vendors in consideration for award.

1. The first phase is an initial review to determine if the proposal, as submitted, is complete. To be complete, a proposal must meet all the requirements of this RFP.
2. The second phase is an in-depth analysis and review based on criteria defined in Section 8 Proposal Content and Organization. The Cities may also choose to conduct interviews.
3. Following completion of the RFP proposal evaluations, including consideration of interviews if held, the third phase is a comparison of each proposal's weighted evaluation relative to the costs proposed. The Cities will only open Price Proposals submitted by those firms with scores within the Competitive Range of 75 to 100 points.

In the event that the Cities require further information and/or a demonstration of any equipment or process offered in any proposal, all vendors asked for same will do so at no cost to the Cities.

PHASE 2 Each proposal response will be evaluated in accordance with the following evaluation criteria:

EVALUATION CRITERIA – PROPOSAL RESPONSES	
Criteria	**Maximum Score**
1. COVER LETTER	N/A
2. TABLE OF CONTENTS	N/A
3. DESCRIPTION OF FIRM AND EXPERIENCE	15
4. PROJECT TEAM AND EQUIPMENT	15
5. PROJECT APPROACH & UNDERSTANDING - CONVERSION	25
6. PROJECT APPROACH & UNDERSTANDING - MAINTENANCE	25
7. PROPOSED LEDs AND SMART CONTROLS	15
8. REFERENCES	5
Maximum Proposal Total:	**100**
Competitive Range	**75 to 100**

If oral interviews or presentations are determined to be necessary, this next step will consist of oral presentations and further clarification of the Proposer's response. No more than the top four (4) Proposers, as determined by the evaluation scoring, will be interviewed.
Following completion of the RFP proposal evaluations, including consideration of interviews if held, the Cities will open Price Proposals submitted by those firms with scores within the Competitive Range of 75 to 100 points.

PHASE 3 Following completion of the RFP proposal evaluations, including consideration of interviews if held, the Cities will score the Price Proposals from Proposers whose RFP evaluations place them in the Competitive Range in accordance with the following evaluation criteria:

Criteria	Maximum Score
1. PRICES, WARRANTIES – LEDs	20
2. PRICES, WARRANTIES - SMART CONTROLS	14
3. PER POLE MAINTENANCE PRICE	8
4. ADDITIONAL MAINTENACE SERVICE PRICES	8

Maximum Price Proposal Total	50

The Price Proposal evaluation score will be added to the Proposal Response evaluation score to determine a **TOTAL SCORE (Maximum Total Score: 150 points)**.

The Cities have the right to reject any or all proposals for good cause in the public interest, and may waive any evaluation irregularities that have no material effect on upholding a fair and impartial evaluation selection process.

10.0 - Miscellaneous

Vendors shall at all times comply with all federal, state, and local laws, ordinances and regulations and shall defend, indemnify and save harmless the Cities against any claims arising from the violation of any such laws, ordinances and regulations, including but not limited to challenges as to the legality of any and all vendor installations.

The Cities are exempt from the payment of the Rhode Island State Sales Tax under the 1956 General Laws of the State of Rhode Island, 44-18-30, Paragraph 1, as amended. Further, the Cities are also exempt from the payment of any excise or federal transportation taxes. The proposal prices submitted must be exclusive of same, and will be so construed.

The Cities reserves the right to cancel an agreement with the Vendor with thirty (30) days written notice and to award the contract to the next highest evaluated bidder.

The Cities reserve the right to renegotiate the terms of this contract with the Vendor for subsequent years provided the Vendor agrees to the contract terms for the renewal period.

The payment and performance of any obligations under this contract for years beyond the first fiscal year are subject to the availability of funds.

The Cities reserve the right to pay the selected Vendor via credit card or Electronic Funds Transfer (ETF) at its sole discretion.

11.0 – Bid Form

16-019 - LED Streetlight Conversion

Date: _____

Submitted By: _____

(Include Name, Address and Telephone No.) _____

_____

_____

Name and remittance address that will appear on invoices:	Physical address of business:
_____	_____
_____	_____
_____	_____
_____	_____

General Information

Is your firm a sole proprietorship doing business under a different name? ____Yes _____ No

If yes, please indicate sole proprietorship, a name, and the name you are doing business under.

_____

_____

Is your firm incorporated? ____Yes _____ No

Will any of the work spelled out in this bid be outsourced? ____Yes _____ No

If so, please explain below:

_____

_____

_____

Have you or your firm been subject to suspension, debarment or criminal conviction by the City of Pawtucket, the City of East Providence, the State of Rhode Island, or any other jurisdiction?
Yes: _____ No: _____

Have the City of Pawtucket, the City of East Providence, and/or the State of Rhode Island ever terminated contracts with your firm for cause?
Yes: _____ No: _____

Has your firm ever withdrawn from a contract with the City of Pawtucket, the City of East Providence, and/or the State of Rhode Island during its performance?
Yes: _____ No: _____

Have you or your firm been involved in litigation against the City of Pawtucket, the City of East Providence, and/or the State of Rhode Island.
Yes: _____ No: _____

If you answered yes to any of the foregoing, please explain the circumstances below. If you or your firm has been involved in litigation against the City of Pawtucket, the City of East Providence, and/or the State of Rhode Island, please include the case caption, case number and status. (If more space is needed, please attach separate sheet and submit with the bid.)

_____

_____

_____

Is your company bonded? Yes ____ No ____

Please describe the nature and extent of all insurance coverage:

_____

_____

_____

Addenda

The following Addenda have been received. The noted modifications to the Bidding Documents have been considered and all costs are included in the Bid Sum.

Addendum #1, Dated:_____

Addendum #2, Dated:_____

Addendum #3, Dated:_____

References

Please list at least three (3) companies' with whom you have contracted to provide similar LED Conversion services. Preferably, references should be municipalities which are of approximate size as the Cities, and a website address should be included if available.

Reference #1

Company Name:_____

Contact Person:_____Telephone #: _____

Contract Dates: _____ To _____

Website Address: _____

Reference # 2

Company Name:_____

Contact Person:_____Telephone #: _____

Contract Dates: _____ To _____

Website Address: _____

Reference # 3

Company Name:_____

Contact Person:_____Telephone #: _____

Contract Dates: _____ To _____

Website Address: _____

Please list at least three (3) companies with whom you have contracted to provide similar LED Conversion services. Preferably, references should be municipalities which are of approximate size as the Cities, and a website address should be included if available.

Reference #1

Company Name:_____

Contact Person:_____Telephone #: _____

Contract Dates: _____ To _____

Website Address: _____

Reference # 2

Company Name:_____

Contact Person:_____Telephone #: _____

Contract Dates: _____ To _____

Website Address: _____

Reference # 3

Company Name:_____

Contact Person:_____Telephone #: _____

Contract Dates: _____ To _____

Website Address: _____

THIS BID FORM ALONG WITH THE PRICE PROPOSALS FOR EACH CITY MUST BE SUBMITTED IN A SEALED ENVELOP ALONG WITH THIS FORM

Appendix A

ANTI-KICKBACK ACKNOWLEDGMENT

ALL BIDDERS/OFFERORS MUST ATTEST TO THE FOLLOWING:

The vendor acknowledges, under the pains and penalties of perjury, that he/she has not been offered, paid, or solicited for any contribution or compensation, nor has he/she been granted a gift, gratuity, or other consideration, either directly or indirectly by any officer, employee or member of the governing body of the City of Pawtucket and/or the City of East Providence who exercises any functions or responsibilities in connection with either the award or execution of the project to which this contract pertains.

Further, the vendor acknowledges, under the pains and penalties of perjury, that he/she has not offered, paid, or solicited by way of any contribution or compensation, nor has he/she granted a gift, gratuity or other consideration either directly or indirectly to any officer, employee, or member of the governing body of the City of Pawtucket and/or the City of East Providence who exercises any functions or responsibilities in connection with either the award or execution of the project to which this project or contract pertains.

_____ _____

SIGNATURE OF OFFEROR DATE

_____

TITLE

_____

COMPANY

Title of RFP:

_____

Appendix B

CITIES OF PAWTUCKET AND EAST PROVIDENCE BOTH REQUIRE THE FOLLOWING GENERAL TERMS AND CONDITIONS OF PURCHASE

Preamble

The City of Pawtucket's Purchasing Office may, from time to time, make amendments to the General Terms and Conditions when the City of Pawtucket's Purchasing Agent determines that such amendments are in the best interest of the City of Pawtucket. Amendments shall be made available for public inspection at the Purchasing Office located in Pawtucket City Hall but shall not require formal public notice and hearing. Copies of the Terms and Conditions shall be provided to any individual or firm requesting them.

CITY OF PAWTUCKET'S PURCHASING OFFICE GENERAL CONDITIONS OF PURCHASE

All City of Pawtucket purchase orders, contracts, solicitations, delivery orders and service requests shall incorporate and be subject to the provisions of Rhode Island General Laws 8-15-4 and the City of Pawtucket purchasing rules and regulations adopted pursuant thereto, all other applicable provisions of the Rhode Island General Laws, the Pawtucket City Charter, specific requirements described in the Request or Contract, and the following General Conditions of Purchase:

1. GENERAL

   All purchase orders, contracts, solicitations, delivery orders, and service requests are for specified goods and services, in accordance with express terms and conditions of purchase, as defined herein. For the purposes of this document, the terms "bidder" and "contractor" refer to any individual, firm, corporation, or other entity presenting a proposal indicating a desire to enter into contracts with the City of Pawtucket, or with whom a contract is executed by the City of Pawtucket's Purchasing Agent, and the term "contractor" shall have the same meaning as "vendor".

2. ENTIRE AGREEMENT

   The City of Pawtucket's Purchase Order, or other City of Pawtucket contract endorsed by the City of Pawtucket Purchasing Office, shall constitute the entire and exclusive agreement between the City of Pawtucket and any contractor receiving an award. In the event any conflict between the bidder's standard terms of sale, these conditions or more specific provisions contained in the solicitation shall govern.

   All communication between the City of Pawtucket and any contractor pertaining to any award or contract shall be accomplished in writing.

   a. Each proposal will be received with the understanding that the acceptance, in writing, by contract or Purchase Order by the City of Pawtucket Purchasing Agent of the offer to do work or to furnish any or all the materials, equipment, supplies or services described therein shall constitute a contract between the bidder and the City of Pawtucket. This shall bind the bidder on his part to furnish and deliver at the prices and in accordance with the conditions of said accepted proposal and detailed

specifications and the City of Pawtucket on its part to order from such contractor (except in case of emergency) and to pay for at the agreed prices, all materials, equipment, supplies or services specified and delivered. A contract shall be deemed executory only to the extent of funds available for payment of the amounts shown on Purchase Orders issued by the City of Pawtucket to the contractors.

b. No alterations or variations of the terms of the contract shall be valid or binding upon the City of Pawtucket unless submitted in writing and accepted by the City of Pawtucket Purchasing Agent. All orders and changes thereof must emanate from the City of Pawtucket Purchasing Office: no oral agreement or arrangement made by a contractor with a department or employee will be considered to be binding on the City of Pawtucket Purchasing Agent, and may be disregarded.

c. Contracts will remain in force for the contract period specified or until all articles or services ordered before date of termination shall have been satisfactorily delivered or rendered and accepted and thereafter until all terms and conditions have been met, unless:

1. terminated prior to expiration date by satisfactory delivery against orders of entire quantities, or
2. extended upon written authorization of the City of Pawtucket Purchasing Agent and accepted by the contractor, to permit ordering of the unordered balances or additional quantities at the contract price and in accordance with the contract terms, or
3. canceled by the City of Pawtucket in accordance with other provisions stated herein.

d. It is mutually understood and agreed that the contractor shall not assign, transfer, convey, sublet or otherwise dispose of this contract or his right, title or interest therein, or his power to execute such contract, to any other person, company or corporation, without the previous consent, in writing, of the City of Pawtucket Purchasing Agent.

e. If, subsequent to the submission of an offer or issuance of a purchase order or execution of a contract, the bidder or contractor shall merge with or be acquired by another entity, the contract may be terminated, except as a corporate resolution prepared by the contractor and the new entity ratifying acceptance of the original bid or contract terms, condition, and pricing is submitted to the City of Pawtucket Purchasing Office, and expressly accepted.

f. The contractor or bidder further warrants by submission of an offer or acceptance of a purchase order or other contract that he has no knowledge at the time of such action of any outstanding and delinquent or otherwise unsettled debt owed by him to the City of Pawtucket, and agrees that later discovery by the City of Pawtucket Purchasing Agent that this warranty was given in spite of such knowledge, except where the matter is pending in hearing or from any appeal therefrom, shall form reasonable grounds for termination of the contract.

3. SUBCONTRACTS

No subcontracts or collateral agreements shall be permitted, except with the City of Pawtucket's express written consent. Upon request, contractors must submit to the City of Pawtucket Purchasing Office a list of all subcontractors to be employed in the performance of any Purchase Order or other contract arising from this Request.

4. RELATIONSHIP OF PARTIES

The contractor or bidder warrants, by submission of an offer or acceptance of a purchase order or other contract, that he is not an employee, agent, or servant of the City of Pawtucket, and that he is fully qualified and capable in all material regards to provide the specified goods and services. Nothing herein shall be construed as creating any contractual relationship or obligation between the City of Pawtucket and any sub-bidder, subcontractor, supplier, or employee of the contractor or offeror.

5. COSTS OF PREPARATION

All costs associated with the preparation, development, or submission of bids or other offers will be borne by the offeror. The City of Pawtucket will not reimburse any offeror for such costs.

6. SPECIFIED QUANTITY REQUIREMENT

Except where expressly specified to the contrary, all solicitations and contracts are predicated on a specified quantity of goods or services, or for a specified level of funding.

a. The City of Pawtucket reserves the right to modify the quantity, scope of service, date of delivery or completion, or funding of any contract, with no penalty or charge, by written notice to the contractor, except where alternate terms have been expressly made a part of the contract.
b. The City of Pawtucket shall not accept quantities in excess of the specified quantity except where the item is normally sold by weight (where sold by weight, the City of Pawtucket will not accept quantities greater than ten per cent [10%] of the specified quantity), or where the Request or Contract provides for awards for other than exact quantities.
c. Purchase Orders or other contracts may be increased in quantity or extended in term without subsequent solicit with the mutual consent of the contractor and the City of Pawtucket, where determined by the City of Pawtucket Purchasing Agent to be in the City of Pawtucket's best interest.

7. TERM AND RENEWAL

Where offers have been requested or contracts awarded for terms exceeding periods of twelve (12) months, it is mutually understood and agreed that the City of Pawtucket's commitment is limited to a base term not to exceed twelve (12) months, subject to renewal annually at the City of Pawtucket's sole option for successive terms as otherwise described, except where expressly specified to the contrary. Purchase orders appearing to commit to obligations of funding or terms of performance may be executed for administrative convenience, but are otherwise subject to this provision, and in such cases the City of Pawtucket's

renewal shall be deemed to be automatic, conditional on the continued availability of appropriated funds for the purpose, except as written notice of the City of Pawtucket's intent not to renew is served.

8. DELIVERY/COMPLETION

Delivery must be made as ordered and/or projects completed in accordance with the proposal. If delivery qualifications do not appear on the bidder's proposal, it will be interpreted to mean that goods are in stock and that shipment will be made within seven (7) calendar days. If the project completion date is not specified in the proposal, the date shall be determined by the City of Pawtucket Purchasing Agent. The decision of the City of Pawtucket Purchasing Agent, as to reasonable compliance with the delivery terms, and date of completion shall be final. Burden of proof of delay in receipt of order shall rest with the contractor. No delivery charges shall be added to invoices except when authorized on the Purchase Order.

9. FOREIGN CORPORATIONS

In accordance with Title 7 Chapter 1.1 ("Business Corporations") of the General Laws of Rhode Island, no foreign corporation shall have the right to transact business in this state until it shall have procured a certificate of authority so to do from the Secretary of State.

10. PRICING

All pricing offered or extended to the City of Pawtucket is considered to be firm and fixed unless expressly provided for to the contrary. All prices shall be quoted F.O.B. Destination with freight costs included in the unit cost to be paid by the City of Pawtucket, except, where the Request or Contract permits, offers reflecting F.O.B. Shipping Point will be considered, and freight costs may then be prepaid and added to the invoice.

11. COLLUSION

Bidder or contractor warrants that he has not, directly or indirectly, entered into any agree participated in any collusion or otherwise taken any action in restraint of full competitive bidding. In special circumstances, an executed affidavit will be required as a part of the bid.

12. PROHIBITION AGAINST CONTINGENT FEES AND GRATUITIES

Bidder or contractor warrants that he has not paid, and agrees not to pay, any bonus, commission, fee, or gratuity to any employee or official of the City of Pawtucket for the purpose of obtaining any contract or award issued by the City of Pawtucket. Bidder or contractor further warrants that no commission or other payment has been or will be received from or paid to any third party contingent on the award of any contract by the City of Pawtucket, except as shall have been expressly communicated to the City of Pawtucket Purchasing Agent in writing prior to acceptance of the contract or award in question. Subsequent discovery by the City of Pawtucket of non-compliance with these provisions shall constitute sufficient cause for immediate termination of all outstanding contracts and suspension or debarment of the bidder(s) or contractor(s) involved.

13. AWARDS

Awards will be made with reasonable promptness and by written notice to the successful bidder (only); bids are considered to be irrevocable for a period of ninety (90) days following the bid opening unless expressly provided for to the contrary in the Request, and may not be withdrawn during this period without the express permission of the City of Pawtucket Purchasing Agent.

a. Awards shall be made to the bidder(s) whose offer(s) constitutes the lowest responsive price offer (or lowest responsive price offer on an evaluated basis) for the item(s) in question or for the Request as a whole, at the option of the City of Pawtucket. The City of Pawtucket reserves the right to determine those offers which are responsive to the Request, or which otherwise serve its best interests.

b. The City of Pawtucket reserves the right, before making award, to initiate investigations as to whether or not the materials, equipment, supplies, qualifications or facilities offered by the bidder meet the requirements set forth in the proposal and specification, and are ample and sufficient to insure the proper performance of the contract in the event of award. If upon such examination it is found that the conditions of the proposal are not complied with or that articles or equipment proposed to be furnished do not meet the requirements called for, or that the qualifications or facilities are not satisfactory, the City of Pawtucket may reject such a bid. It is distinctly understood, however, that nothing in the foregoing shall mean or imply that it is obligatory upon the City of Pawtucket to make any examinations before awarding a contract; and it is further understood that if such examination is made, it in no way relieves the contractor from fulfilling all requirements and conditions of the contract.

c. Qualified or conditional offers which impose limitations of the bidder's liability or modify the requirements of the bid, offers for alternate specifications, or which are made subject to different terms and conditions than those specified by the City of Pawtucket may, at the option of the City of Pawtucket, be

   1. rejected as being non-responsive, or
   2. set aside in favor of the City of Pawtucket's terms and conditions (with the consent of the bidder), or
   3. accepted, where the City of Pawtucket Purchasing Agent determines that such acceptance best serves the interests of the City of Pawtucket.

   Acceptance or rejection of alternate or counter-offers by the City of Pawtucket shall not constitute a precedent which shall be considered to be binding on successive solicitations or procurements.

d. Bids submitted in pencil, or which do not bear an original signature, in ink, by an owner or authorized agent thereof, will not be accepted.

e. Bids must be extended in the unit of measure specified in the Request. In the event of any discrepancy between unit prices and their extensions, the unit price will govern.

f. The City of Pawtucket Purchasing Agent reserves the right to determine the responsibility of any bidder for a particular procurement.

g. The City of Pawtucket Purchasing Agent reserves the right to reject any and all bids in whole or in part, to waive technical defects, irregularities,

and omissions, and to give consideration to past performance of the offerors where, in his judgment the best interests of the City of Pawtucket will be served by so doing.

h. The City of Pawtucket Purchasing Agent reserves the right to make awards by items, group of items or on the total low bid for all the items specified as indicated in the detailed specification, unless the bidder specifically indicates otherwise in his bid.

i. Preference may be given to bids on products raised or manufactured in the City of Pawtucket or State of Rhode Island, other things being equal.

j. The impact of discounted payment terms shall not be considered in evaluating responses to any Request.

k. The City of Pawtucket Purchasing Agent reserves the right to act in the City of Pawtucket's best interests regarding awards caused by clerical errors by the City of Pawtucket Purchasing Office.

14. SUSPENSION AND DEBARMENT

The City of Pawtucket Purchasing Agent may suspend or debar any vendor or potential bidder, for good cause shown:

a. A debarment or suspension against a part of a corporate entity constitutes debarment or suspension of all of its divisions and all other organizational elements, except where the action has been specifically limited in scope and application, and may include all known corporate affiliates of a contractor, when such offense or act occurred in connection with the affiliate's performance of duties for or on behalf of the contractor, or with the knowledge, approval, or acquiescence of the contractor or one or more of its principals or directors (or where the contractor otherwise participated in, knew of, or had reason to know of the acts).

b. The fraudulent, criminal or other serious improper conduct of any officer, director, shareholder, partner, employee, or any other individual associated with a contractor may be imputed to the contractor when the conduct occurred in connection with the individual's performance of duties for or on behalf of the contractor, or with the contractor's knowledge, approval or acquiescence. The contractor's acceptance of benefits derived from the conduct shall be evidence of such knowledge, approval, or acquiescence.

c. A vendor or contractor who knowingly engages as a subcontractor for a contract awarded by the City of Pawtucket to a vendor or contractor then under a ruling of suspension or debarment by the City of Pawtucket shall be subject to disallowance of cost, annulment or termination of award, issuance of a stop work order, or debarment or suspension, as may be judged to be appropriate by the City of Pawtucket’s Purchasing Agent.

15. PUBLIC RECORDS

Contractors and bidders are advised that certain documents, correspondence, and other submissions to the City of Pawtucket’s Purchasing Office may be voluntarily made public by the City of Pawtucket absent specific notice that portions of such submittals may contain confidential or proprietary information, such that public access to those items should be withheld.

16. PRODUCT EVALUATION

In all specifications, the words "or equal" are understood after each article when manufacturer's name or catalog is referenced. If bidding on items other than those specified, the bidder must, in every instance, give the trade designation of the article, manufacturer's name and detailed specifications of the item the bidder proposes to furnish; otherwise, the bid will be construed as submitted on the identical commodity described in the detailed specifications. The City of Pawtucket's Purchasing Agent reserves the right to determine whether or not the item submitted is the approved equal the detailed specifications.

a. Any objections to specifications must be filed by a bidder, in writing, with the City of Pawtucket's Purchasing Agent at least 96 hours before the time of bid opening to enable the City of Pawtucket's Purchasing Office to properly investigate the objections.
b. All standards are minimum standards except as otherwise provided for in the Request or Contract.
c. Samples must be submitted to the City of Pawtucket's Purchasing Office in accordance with the terms of the proposals and detailed specifications. Samples must be furnished free of charge and must be accompanied by descriptive memorandum invoices indicating whether or not the bidder desires their return and specifying the address to which they are to be returned (at the bidder's risk and expense), provided they have not been used or made useless by tests; and absent instructions, the samples shall be considered to be abandoned. Award samples may be held for comparison with deliveries.
d. All samples submitted are subject to test by any laboratory the City of Pawtucket's Purchasing Agent may designate.

17. PRODUCT ACCEPTANCE

All merchandise offered or otherwise provided shall be new, of prime manufacture, and of first quality unless otherwise specified by the City of Pawtucket. The City of Pawtucket reserves the right to reject all nonconforming goods, and to cause their return for credit or replacement, at the City of Pawtucket's option. Contract deliverables specified for procurements of services shall be construed to be work products, and subject to the provisions of this section.

a. Failure by the City of Pawtucket to discover latent defect(s) or concealed damage or non-conformance shall not foreclose the City of Pawtucket's right to subsequently reject the goods in question.
b. Formal or informal acceptance by the City of Pawtucket of non-conforming goods shall not constitute a precedent for successive receipts or procurements.
c. Where the contractor fails to promptly cure the defect or replace the goods, the City of Pawtucket reserves the right to cancel the Purchase Order, contract with a different contractor, and to invoice the original contractor for any differential in price over the original contract price.
d. When materials, equipment or supplies are rejected, the same must be removed by the contractor from the premises of the City of Pawtucket within forty-eight (48) hours of notification. Rejected items left longer than

two days will be regarded as abandoned and the City of Pawtucket shall have the right to dispose of them as its own property.

18. PRODUCT WARRANTIES

All product or service warranties normally offered by the contractor or bidder shall accrue to the City of Pawtucket's benefit, in addition to any special requirements which may be imposed by the City of Pawtucket. Every unit delivered must be guaranteed against faulty material and workmanship for a period of one year unless otherwise specified, and the City of Pawtucket may, in the event of failure, order its replacement, repair, or return for full credit, at its sole option.

19. PAYMENT

Unless otherwise provided for by the Request or Contract, payment shall not be made until delivery has been made, or services performed, in full, and accepted. Payment shall not be due prior to thirty (30) working days following the latest of completion, acceptance, or the rendering of a properly submitted invoice.

a. Payment terms other than the foregoing may be rejected as being nonresponsive.

b. No partial shipments, or partial completion will be accepted, unless provided for by the Request or Contract.

c. Where a question of quality is involved, or failure to complete a project by the specified due date, payment in whole or part against which to charge back any adjustment required, shall be withheld at the direction of the City of Pawtucket Purchasing Agent. In the event a cash discount is stipulated, the withholding of payments, as herein described, will not deprive the City of Pawtucket from taking such discount.

d. Payments for used portion of inferior delivery or late delivery will be made by the City of Pawtucket on an adjusted price basis.

e. Payments on contracts under architectural or engineering supervision must be accompanied by a Certificate of Payment and Statement of Account signed by the architect or engineer and submitted to the City of Pawtucket Purchasing Office for approval.

20. THIRD PARTY PAYMENTS

The City of Pawtucket recognizes no assigned or collateral rights to any purchase agreement except as may be expressly provided for in the bid or contract documents, and will not accede to any request for third party or joint payment(s), except as provided for in specific orders by a court of competent jurisdiction, or by express written permission of the City of Pawtucket's Purchasing Agent. Where an offer is contingent upon such payment(s), the offeror is obligated to serve affirmative notice in his bid submission.

21. SET-OFF AGAINST PAYMENTS

Payments due the contractor may be subject to reduction equal to the amount of unpaid and delinquent state taxes (or other just debt owed to the State), except where notice of delinquency has not been served or while the matter is pending in hearing or from any appeal therefrom.

22. CLAIMS

Any claim against a contractor may be deducted by the City of Pawtucket from any money due him in the same or other transactions. If no deduction is made in such fashion, the contractor shall pay the City of Pawtucket the amount of such claim on demand. Submission of a voucher and payment, thereof, by the City of Pawtucket shall not preclude the City of Pawtucket's Purchasing Agent from demanding a price adjustment in any case when the commodity delivered is later found to deviate from the specifications and proposal.

a. The City of Pawtucket's Purchasing Agent may assess dollar damages against a vendor or contractor determined to be non-performing or otherwise in default of their contractual obligations equal to the cost of remedy incurred by the City of Pawtucket, and make payment of such damages a condition for consideration for any subsequent award. Failure by the vendor or contractor to pay such damages shall constitute just cause for disqualification and rejection, suspension, or debarment.

23. CERTIFICATION OF FUNDING

The Director of Finance shall provide certification as to the availability of funds to support the procurement for the current fiscal year ending June 30th only. Where delivery or service requirements extend beyond the end of the current fiscal year, such extensions are subject to both the availability of appropriated funds and a determination of continued need.

24. UNUSED BALANCES

Unless otherwise specified, all unused Blanket Order quantities and/or unexpended funds shall be automatically canceled on the expiration of the specified term. Similarly, for orders encompassing more than one fiscal year, unexpended balances of funding allotted for an individual fiscal year may be liquidated at the close of that fiscal year, at the City of Pawtucket's sole option.

25. MINORITY BUSINESS ENTERPRISES

Pursuant to the provisions of Title 37 Chapter 14.1of the General Laws, the City of Pawtucket reserves the right to apply additional consideration to offers, and to direct awards to bidders other than the responsive bid representing the lowest price where:

a. the offer is fully responsive to the terms and conditions of the Request, and

b. the price offer is determined to be within a competitive range (not to exceed 5% higher than the lowest responsive price offer) for the product or service, and

c. the firm making the offer has been certified by the R.I. Department of Economic Development to be a small business concern meeting the criteria established to be considered a Minority Business Enterprise.

26. PREVAILING WAGE REQUIREMENT

In accordance with Title 37 Chapter 13 of the General Laws of Rhode Island, payment of the general prevailing rate of per diem wages and the general prevailing rate for regular, overtime and other working conditions existing in the

locality for each craft, mechanic, teamster, or type of workman needed to execute this work is a requirement for both contractors and subcontractors for all public works.

27. EQUAL OPPORTUNITY COMPLIANCE, HANDICAPPED ACCESS AND AFFIRMATIVE ACTION

Contractors of the City of Pawtucket are required to demonstrate the same commitment to equal opportunity as prevails under federal contracts controlled by Federal Executive Orders 11246, 11625, 11375 and 11830, and Title 28 Chapter 5.1 of the General Laws of Rhode Island.

Affirmative action plans shall be submitted by the contractor for review by the State Equal Opportunity Office. A contractor's failure to abide by the rules, regulations, contract terms and compliance reporting provisions as established shall be grounds for forfeiture and penalties as shall be established, including but not limited to suspension.

28. DRUG-FREE WORKPLACE REQUIREMENT

Contractors who do business with the City of Pawtucket and their employees shall abide by the State's drug-free workplace policy and the contractor shall so attest by signing a certificate of compliance.

29. TAXES

The City of Pawtucket is exempt from payment of excise, transportation and sales tax imposed by the Federal or State Government. These taxes should not be included in the proposal price. Exemption Certificates will be furnished upon request.

30. INSURANCE

All construction contractors, independent tradesmen, or firms providing any type of maintenance, repair, or other type of service to be performed on City of Pawtucket premises, buildings, or grounds are required to purchase and maintain coverage with a company or companies licensed to do business in the state as follows:

a. Comprehensive General Liability Insurance

Combined Single Limit not less than $1,000,000 each occurrence for bodily Injury and property damage.

- Independent Contractors;
- Contractual - including construction hold harmless and other types of contracts or agreements in effect for insured operations;
- Products and Completed Operations;
- Personal Injury (with employee exclusion deleted)

b. Automobile Liability Insurance

Combined Single Limit not less than $1,000,000 each occurrence for bodily Injury and property damage including non-owned and/or hired vehicle coverage.

OR

Bodily Injury, per person, $500,000/ Bodily Injury, $1,000,000 per accident/ Property Damage, $500,000 per accident including non-owned and/or hired vehicle coverage.

c. Workers' Compensation Insurance
As required by the General Laws of Rhode Island.
- Employers liability $500,000

The City of Pawtucket shall be named as an additional insured on the vendor's Comprehensive General Liability Policy and Automobile Liability Policy.

The City of Pawtucket's Purchasing Agent reserves the right to consider and accept alternate forms and plans of insurance or to require additional or more extensive coverage for any individual requirement. Successful bidders shall provide certificates of coverage, reflecting the City of Pawtucket as an additional insured, to the City of Pawtucket Purchasing Office, forty-eight (48) hours prior to the commencement of work, as a condition of award. Failure to comply with this provision shall result in rejection of the offeror's bid.

31. BID SURETY
When requested, a bidder must furnish a Bid Bond or Certified Check for 5% of his bid, or for the stated amount shown in the solicitation. Bid Bonds must be executed by a reliable Surety Company authorized to do business in the State of Rhode Island. Failure to provide Bid Surety with bid may be cause for rejection of bid. The Bid Surety of any three bidders in contention will be held until an award has been made according to the specifications of each proposal. All others will be returned by mail within 48 hours following the bid opening. Upon award of a contract, the remaining sureties will be returned by mail unless instructed to do otherwise.

32. PERFORMANCE AND LABOR AND PAYMENT BONDS
A performance bond and labor and payment bond of up to 100% of an award may be required by the City of Pawtucket's Purchasing Agent. Bonds must meet the following requirements:

a. Corporation: The Bond must be signed by an official of the corporation above his/her official title and the corporate seal must be affixed over his/her signature.
b. Firm or Partnership: The Bond must be signed by all of the partners and must indicate that they are " Doing Business As (name of firm)."
c. Individual: The Bond must be signed by the individual owning the business and indicate "Owner."
d. The Surety Company executing the Bond must be licensed to do business in the State of Rhode Island or Bond must be countersigned by a company so licensed.
e. The Bond must be signed by an official of the Surety Company and the corporate seal must be affixed over his signature.

f. Signatures of two witnesses for both the principal and the Surety must appear on the Bond.

g. A Power of Attorney for the official signing of the Bond for the Surety Company must be submitted with the Bond.

33. SUSPENSION, DEFAULT AND TERMINATION

a. Suspension of a Contract by the City of Pawtucket

The City of Pawtucket reserves the right at any time and for any reason to suspend all or part of this contract, for a reasonable period, not to exceed sixty days, unless the parties agree to a longer period. The City of Pawtucket shall provide the contractor with written notice of the suspension order signed by the Purchasing Agent or his or her designee, which shall set forth the date upon which the suspension shall take effect, the date of its expiration, and all applicable instructions. Upon receipt of said order, the contractor shall immediately comply with the order and suspend all work under this contract as specified in the order. The contractor shall take all reasonable steps to mitigate costs and adverse impact to the work specified in the contract during the suspension period. Before the order expires, the City of Pawtucket shall either:

1. cancel the suspension order;
2. extend the suspension order for a specified time period not to exceed thirty (30) days; or
3. terminate the contract as provided herein.

The contractor shall resume performance once a suspension order issued under this section is canceled or expires. If as a result of the suspension of performance, there is a financial or schedule impact upon the contract, an appropriate adjustment may be made by, or with the approval of, the City of Pawtucket's Purchasing Agent. Any adjustment shall be set forth in writing. After a suspension order has been canceled or expires, the contractor shall provide any request for adjustment to the City of Pawtucket's Purchasing Agent within thirty (30) days after resuming work performance.

b. Termination of a Contract by the City of Pawtucket

1. Termination for Default or Nonperformance

If, for any reason, the contractor breaches the contract by failing to satisfactorily fulfill or perform any obligations, promises, terms, or conditions, and having been given reasonable notice of and opportunity to cure such default, fails to take satisfactory corrective action within the time specified by the City of Pawtucket, the City of Pawtucket may terminate the contract, in whole or in part, the termination of all outstanding contracts or sub-contracts held by the contractor, and the suspension or debarment of the contractor from future procurements by giving written notice to the contractor specifying the date for termination. The City of Pawtucket shall endeavor to provide such notice at least seven (7) calendar days before the effective date of the termination.

A contractor who fails to commence within the time specified or complete an award made for repairs, alterations, construction, or any other service will be considered in default of contract. If

contractor consistently fails to deliver quantities or otherwise perform as specified, the City of Pawtucket's Purchasing Agent reserves the right to terminate the contract and contract for completion of the work with another contractor and seek recourse from the defaulting contractor or his surety. In the event of a termination for default or nonperformance, in whole or in part, the City of Pawtucket may procure similar goods or services in a manner and upon terms it deems appropriate, and the contractor shall be liable for the excess costs incurred by the City of Pawtucket as a result of the contractor's default. The contractor, or its surety, agrees to promptly reimburse the City of Pawtucket for the excess costs, but shall have no claim to the difference should the replacement cost be less.

2. Termination Without Cause

The City of Pawtucket may terminate the contract in whole or in part without cause at any time by giving written notice to the contractor of such termination at least thirty (30) days before the effective date of such termination. The notice shall specify the part(s) of the contract being terminated and the effective termination date.

Within thirty (30) days of the effective date of the termination of the contract the contractor shall compile and submit to the City of Pawtucket an accounting of the work performed up to the date of termination. The City of Pawtucket may consider the following claims in determining reasonable compensation owed to the contractor for work performed up to the date of termination:

a. contract prices for goods or services accepted under the contract;
b. costs incurred in preparing to perform and performing the terminated portion of the contract; or
c. any other reasonable costs incurred by the contractor as a result of the termination.

The total sum to be paid to the contractor shall not exceed the total contract price, less any payments previously made to the contractor, the proceeds from any sales of goods or manufacturing materials, and the contract price for work not terminated.

3. Contractor's Obligations in the Event of Termination

If the contract is terminated for any reason, or expires pursuant to its terms, the contractor shall transfer and deliver to the City of Pawtucket in the manner and to the extent directed by the City of Pawtucket:

a. all finished or unfinished material prepared by the contractor; and

b. all material, if any, provided to the contractor by the City of Pawtucket.

For the purposes of the contract, “material” shall include, but is not limited to, goods, supplies, parts, tools, machinery, equipment, furniture, fixtures, information, data, reports, summaries, tables, maps, charts, photographs, studies, recommendations, files, audiotapes, videotapes, records, keys, security badges, and documents.

If the contract is terminated for cause, the contractor shall not be relieved of liability to the City of Pawtucket for damages sustained because of any breach by the contractor. In such event, the City of Pawtucket may retain any amounts which may be due and owing to the contractor until such time as the exact amount of damages due the City of Pawtucket from the contractor has been determined by the City of Pawtucket Purchasing Agent. The City of Pawtucket may also set off any damages so determined against the amounts retained.

Upon termination of the contract, the contractor shall stop performance on the date specified, terminate any outstanding orders and subcontracts applicable to the terminated portion of the contract, and shall incur no further commitments or obligations in connection with the terminated performance. The contractor shall settle all liabilities and claims arising out of the termination of subcontracts and order generating from the terminated performance. The City of Pawtucket may direct the contractor to assign the contractor’s right, title and interest under terminated orders or subcontracts to the City of Pawtucket or a third party.

Terminations of Purchase Order Contracts or Master Pricing Agreements shall require the signature of the City of Pawtucket Purchasing Agent or his designee. Notice of termination by either party shall be submitted in writing to the other party in accordance with the termination clause of the contract, or where no specific termination clause is included, written notice shall be provided no later than thirty (30) days before the expiration of the contract.

34. INDEMNITY

The contractor guarantees:

a. To save the City of Pawtucket, its agents and employees, harmless from any liability imposed upon the City of Pawtucket arising from the negligence, either active or passive, of the contractor, as well as for the use of any copyrighted or uncopyrighted composition, secret process, patented or unpatented invention, article or appliance furnished or used in the performance of the contract of which the contractor is not the patentee, assignee or licensee.

b. To pay for all permits, licenses and fees and give all notices and comply with all laws, ordinances, rules and regulations of the City of Pawtucket and of the State of Rhode Island.

c. That the equipment offered is standard new equipment, latest model of regular stock product with all parts regularly used with the type of equipment offered; also, that no attachment or part has been substituted

or applied contrary to manufacturer's recommendations and standard practice.

35. CONTRACTOR'S OBLIGATIONS

In addition to the specific requirements of the contract, construction and building repair contractors bear the following standard responsibilities:

a. To furnish adequate protection from damage for all work and to repair damages of any kind, for which he or his workmen are responsible, to the building or equipment, to his own work, or to the work of other contractors;

b. The contractor, its subcontractor(s) and their employees and/or agents, shall protect and preserve property in the contractor or subcontractor’s possessions in which the City of Pawtucket has an interest, and any and all materials provided to the contractor or subcontractor by the City of Pawtucket;

c. To clear and remove all debris and rubbish resulting from his work from time to time, as directed or required, a completion of the work leave the premises in a neat unobstructed condition, broom clean, and in satisfactory order and repair;

d. To store equipment, supplies, and material at the site only upon approval by the City of Pawtucket, and at his own risk;

e. To perform all work so as to cause the least inconvenience to the City of Pawtucket, and with proper consideration for the rights of other contractors and workmen;

f. To acquaint themselves with conditions to be found at the site, and to assume responsibility for the appropriate dispatching of equipment and supervision of his employees during the conduct of the work;

g. To ensure that his employees are instructed with respect to special regulations, policies, and procedures in effect for any City of Pawtucket facility or site, and that they comply with such rules, including but not limited to security policies or practices and/or criminal background checks for any employees and/or subcontractors;

h. The contractor shall ensure that its employees or agents are experienced and fully qualified to engage in the activities and services required under the contract;

i. The contractor shall ensure that at all times while services are being performed under this contract at least one of its employees or agents on the premises has a good command of the English language and can effectively communicate with the City of Pawtucket and its staff;

j. The contractor and contractor’s employees or agents shall comply with all applicable licensing and operating requirements required by federal or state law and shall meet accreditation and other generally accepted standards of quality in the applicable field of activity;

k. The contractor shall secure and retain all employee-related insurance coverage for its employees and agents as required by law; and

l. The contractor, subcontractor, and his or her employees and agents shall not disclose any confidential information of the City of Pawtucket to a third party. Confidential information means:

(1) any information of a sensitive or proprietary nature, whether or not specially identified as confidential or proprietary; or

(2) any information about the City of Pawtucket gained during the performance of a contract that is not already lawfully in the public domain.

36. FORCE MAJEURE

All orders shall be filled by the contractor with reasonable promptness, but the contractor shall not be held responsible for any losses resulting if the fulfillment of the terms of the contract shall be delayed or prevented by wars, acts of public enemies, strikes, fires, floods, acts of God, or for any other acts not within the control of the contractor and which by the exercise of reasonable diligence, the contractor is unable to prevent.

nationalgrid

Narragansett Electric Co. Guidelines for Customer-Owned Street Lighting Installation and Maintenance

The general safety and welfare of the public and all workers are of paramount concern to Narragansett Electric Co., d/b/a National Grid (hereinafter "Company"). These concerns are particularly salient as street lights are installed within the designated electric space on a distribution pole and/or provided service from underground electric distribution enclosures. To perform work on street lights, workers must often be within established electrical clearances above the communication space and in close proximity to electric distribution lines with voltages as high as 34.5KV. Therefore, the Company requires that anyone working above the communication space on Company poles or within electric distribution enclosures are electrically qualified as defined by OSHA 1910.269 (hereinafter "Qualified Electrical Worker"). Customer personnel or Qualified Electrical Workers are never allowed to enter a Company manhole, handhole, or other enclosed electrical equipment for any reason without the Company's safety supervision personnel being present on site.

Maintenance of Overhead Customer-Owned Street and Area Lighting Equipment

Once the street lighting purchase process and the transfer of ownership of the unmetered street lights or the attachment of customer-owned unmetered street and area lighting as available under the S-05 tariff (new requests) is complete, the customer is responsible for maintaining all customer-owned street and area lighting equipment, including but not limited to: luminaires, standards, foundations, conduits and conductors. The Company will allow the customer to perform all maintenance activities on customer-owned equipment provided they are in compliance with the following provisions:

- The customer shall ensure that only Qualified Electrical Workers perform work on the street lighting system. This assurance will be provided to the Company through the execution of the Company's Acknowledgment for the Use of Qualified Electrical Workers document (hereinafter "Acknowledgment") by an appropriately authorized municipal or governmental official. This Acknowledgment is currently located in the Agreement for Customer-Owned Street and Area Lighting Attachments as Appendix Form G.

- If the customer's workers do not meet the qualifications stated above, or the Company is not in receipt of a valid Acknowledgment, the customer shall request that the Company make all connections and/or disconnections of the customer's street lighting system to the Company's secondary distribution conductors to facilitate certain maintenance or equipment replacement in a de-energized condition. If this occurs, the Company will assess the appropriate service charges per the Company's Terms and Conditions for Distribution Service.[1]

Maintenance of Underground Customer-Owned Street and Area Lighting Equipment

Customer personnel or Qualified Electrical Workers are never allowed to enter a Company manhole, handhole, or other enclosed electrical equipment for any reason without the Company's safety supervision personnel being present on site.

[1] R.I.P.U.C. No. 2130.

However:

- At the sole discretion of the Company, the customer's Qualified Electrical Workers may be allowed supervised access to perform maintenance or equipment replacement functions of customer- owned equipment within enclosed Company facilities.

- When supervised access is denied, the Company shall schedule and perform the required customer work and be reimbursed for all time and expenses, including materials, in accordance with the Company's Attachment Agreement.

The Company will allow the customer to perform all routine maintenance activities on customer-owned underground fed equipment provided compliance with the following provisions:

- The customer shall ensure that only Qualified Electrical Workers work on its street and area lighting system by having an appropriately authorized municipal or governmental official execute the Acknowledgment.

- The Company will permit a customer's Qualified Electrical Worker to install the fused disconnect device through the access point at the pole base of the first street light from the source while the street and area lights are energized.

- As mentioned previously, if the customer's workers do not meet the qualifications stated above, or the Company is not in receipt of a valid Acknowledgment, the customer must request that the Company make all connections and/or disconnections of the customer's street lighting system to the Company's secondary distribution conductors to facilitate certain maintenance or equipment replacement in a de-energized condition. If this occurs, the Company will assess the appropriate service charges per the Company's Terms and Conditions for Distribution Service as referenced in the Company's Attachment Agreement.

Electric System Separation

Per the Company's Attachment Agreement, the customer is responsible for creating a physical electrical separation between the Company's secondary conductors and the customer-owned street and area light conductors. This separation is accomplished by installing a fused disconnect device (e.g., an in-line fuse holder capable of utilizing a midget cartridge style fuse on every street and area light supply located as near as possible to the connection to the Company-owned secondary conductors). The Company will permit the customer to install the disconnect devices on existing street light locations in an energized condition using Qualified Electrical Workers, which will include the disconnecting of the existing energized supply conductor source to the street light luminaire. This should not require a visit from the Company to de-energize or re-energize the street light source at the service connection.

- The fused disconnect device, in addition to providing electrical protection, shall serve as a disconnect point for the customer-owned street light. Once installed, the customer's Qualified Electrical Worker may disconnect or reconnect a customer-owned street light(s) using the fuse device to perform maintenance or other equipment

replacement. The disconnect device must be installed prior to or during any major maintenance/equipment replacement of an existing light (luminaire replacement, arm/bracket replacement, etc.) or within a period not greater than 10 years following the purchase date, and must be installed at the time of any new customer-owned lighting attachment. Further, in the event a customer plans to purchase the Company's street lights and convert to LED or other light source, this fused disconnect device is required to be installed at the time of conversion.

- For underground customer circuit applications, the customer shall locate the disconnect device within an enclosure installed and owned by the customer and located in close proximity to the designated service connection location within the enclosed Company facility. However, optimum location for the disconnect device is within an enclosure installed and owned by the customer and located in close proximity to the designated service connection location within the enclosed company facility. However, at a minimum for existing street lighting installations only, the disconnect device can be located within the base of the first street light standard closest to the circuit's service connection.

- If it is found that the existing street light conductors or circuits are insufficient, the Company will allow the customer to install a #10 AWG wire of sufficient length, and will allow the customer to make the permanent connections to the Company's secondary using the appropriately sized connectors per the Company's Customer-Owned Municipal Lighting Standards.

New or Relocation Lighting Requests - Overhead

For new customer-owned street lighting attachments or the relocation of existing street lights sourced by overhead equipment, the customer must submit the appropriate Company forms provided in the Attachment Agreements prior to a required field survey by the Company personnel or agent. The field survey is performed to ensure all NESC clearances and loading conditions of the distribution structure or pole are acceptable. If existing clearances and load capacity are sufficient, the Company shall approve the customer's installation or relocation of street lighting equipment. If existing clearances and load capacity are not sufficient to accommodate the requested attachment, the make-ready terms and provisions of the Attachment Agreement will become applicable.

Once the appropriate conditions for installing or relocating the equipment are met, the customer shall:

1. Install the equipment per the Company's Customer-Owned Lighting Standards using Qualified Electrical Workers;

2. Leave a recommended #10 AWG Black wire and a #10 AWG White wire of sufficient length for the Company to perform the final connections to the company's secondary network;

3. Provide a #4 AWG stranded copper conductor with sufficient length to connect to the pole mounting equipment grounding conductor (when available) or to the secondary system neutral.

4. Install the physical disconnect device to be installed and ready prior to making the final connection to the secondary conductors on new or relocated lights.

For new customer-owned street lighting attachments or the relocation of existing street lights sourced by overhead equipment, the Company personnel shall perform the final service connections. The Company will assess the applicable Lighting Service Charge per the Company's Terms and Conditions for Distribution Service and referenced in the Company's Attachment Agreements.

New or Relocation Lighting Requests - Underground

For new customer-owned street lighting attachments or the relocation of existing street lights sourced by underground equipment, the customer must submit the appropriate Company forms provided in the Attachment Agreements prior to the Company personnel performing the required field survey to locate and provide an applicable electrical service point. Following the customer's installation of the equipment per the Company's Customer-Owned Lighting Standards, which recommends #10 AWG Black and White wire of adequate length and a required #4 AWG stranded copper conductor to be installed to the specified ground assembly provided by the customer, the Company would perform the supply connections at the service point.

For new customer-owned street lighting attachments or the relocation of existing street lights sourced by underground equipment, Company personnel shall perform the final service connections. The Company will assess the applicable Lighting Service Charge per the Company's Terms and Conditions for Distribution Service as referenced in the Company's Attachment Agreements.

Lighting Removal Requests

In the event a customer determines a light is no longer needed, the customer may remove the lighting equipment from the pole or other Company facility. The customer will be responsible for disconnecting the existing source and neutral conductors to the light and making the circuit electrically and physically safe. Given that the appropriate notification and timeframes are provided to the Company by the customer per the Attachment Agreement, and upon notification of the customer's removal of all street lighting equipment, the Company will visit the location and remove the remaining connections from the secondary network. At that point, electric service billing for that location will be terminated following the billing of the applicable Lighting Service Charge per the Company's Terms and Conditions for Distribution Service for removal of the connection per each service connection location.

Contact Us

In the event that a Qualified Electrical Worker performing work on behalf of the customer is presented with a situation that may require the Company's assistance, please do not hesitate to contact a Company representative before performing or continuing the work. Be advised, however, that the Company shall perform work requests in accordance with the applicable provisions of the Company's Terms and Conditions for Distribution Service.

STANDARD	PAGE
• TABLE OF CONTENTS	1
• 1. SAFETY	2
• 2. GENERAL	3
Standards	3
Customer Owned Equipment	3
Electrical Separation	3
Ownership Identification	3
Worker Qualifications	3
Final Connections to National Grid Secondary Conductors	3
• 3. CONSTRUCTION DRAWINGS	
o Figure 1 – Ownership Identification Label for Customer Owned Outdoor Luminaires	4
o Figure 2 – Installation of Ownership Identification Label	4
o Figure 3 – Outdoor Light Clearances from Overhead Conductors	5
o Figure 4 – Mechanical Protection for Overhead Supplied Outdoor Light Fixture Conductors	6
o Figure 5 – Grounding of Overhead Supplied Outdoor Light	7
o Figure 6 – Connection of Overhead Supplied Customer Owned Outdoor Light to National Grid Overhead Secondary Conductors	8
o Figure 7 – Connection of Customer Owned Outdoor Lighting Riser to National Grid Overhead Secondary Conductors	9
o Figure 8 – Connection of Underground Supplied Customer Owned Light to National Grid Padmount Transformer	10
o Figure 9 – Connection of Underground Supplied Customer Owned Outdoor Light to National Grid Handhole or Manhole – Standard Connection	11
o Figure 10 – Connection of Underground Supplied Customer Owned Outdoor Light to National Grid Handhole or Manhole – Non-Standard Connection	12
o Figure 11 – Pole Numbering – Underground Supplied Lighting	13
o Figure 12 – In-Line Fused Disconnect Details	14

This document contains information that is provided for reference purposes only, and should not be construed or used as a substitute for an analysis of the applicable tariffs, agreements, and safety regulations specific to each particular customer.

1. SAFETY:

The number 1 priority of every job is:

SAFETY!

National Grid's distribution poles carry electric lines that operate at voltages as high as 34,500 volts and can carry very high amperages.

National Grid's underground infrastructure carries the same very high distribution voltages and amperages in a confined space, and may also carry sub-transmission or transmission lines that operate at even higher voltage levels.

Outdoor lights are installed within the electric space on a distribution pole. Performing work on outdoor lights may require the worker to be in close proximity to the distribution lines.

It is the responsibility of the customer that owns and maintains outdoor lighting to insure that all personnel working on the outdoor lighting system are qualified to work in the designated electric supply space on a distribution pole in accordance with OSHA 1910.269.

OVERHEAD DISTRIBUTION
No customer, customer's employees, or contractors are ever allowed to perform any work on National Grid 120/240 volt or 120/208 volt secondary conductors.

UNDERGROUND DISTRIBUTION
No customer, customer's employees, or contractors are ever allowed to enter a National Grid manhole or handhole for any reason without National Grid safety supervision personnel being present on site.

IF UNSURE: - **STOP** – Call National Grid for assistance.

No outdoor lighting repair is too important to sacrifice personal safety.

2. **GENERAL:** These Standards identify requirements to enable a customer to safely install, remove, and maintain a customer owned outdoor lighting system which is installed on National Grid distribution poles and connected to National Grid overhead or underground secondary conductors.

Standards: All customer owned outdoor lighting shall be in compliance with the applicable provisions of the National Electric Safety Code, (NESC) latest edition, and the applicable National Grid Construction Standards.

Note: (As of July 1, 2014, the latest edition of the NESC is the 2012 edition)

Customer Owned Equipment: The customer shall be responsible to own, operate, and maintain all outdoor lighting equipment beyond the service tap connections to National Grid. This shall include, but not be limited, to the following:

1. Supplying all material and labor.
2. Transferring an overhead supplied outdoor light attachment to a new pole in the event of a pole replacement.
3. Relocating an overhead supplied outdoor light attachment to accommodate other construction activities on the pole.
4. Performing any work required on the outdoor lighting underground conduit system, conductors, foundation, pole, arm and luminaire.
5. Emergency 24 hour response to remove or make safe the outdoor light attachment in the event of a broken pole.

NOTE: In an emergency, National Grid personnel may perform, at customer expense, any customer outdoor lighting work National Grid deems necessary to maintain public or employee safety.

Electrical Separation: The customer is responsible to create an electrical separation between the National Grid secondary conductors and the customer owned outdoor lighting conductors. This is required to insure the safety of National Grid and customer employees. It also clearly defines where National Grid ownership ends and customer ownership begins. This is accomplished by installing a dual pole in-line fuse holder with a midget cartridge style fuse on every outdoor light supply located as near as possible to the connection to the National Grid owned secondary conductors. This fuse, in addition to providing electrical protection, shall serve as a future disconnect point for the customer owned outdoor light. Once installed, the customer may disconnect or reconnect a customer owned outdoor light only by means of the in-line fuse holder. See Figure 6 for overhead supplied outdoor lights, and Figures 7, 8, 9, or 10 for underground supplied outdoor lights. See Figure 12 for in-line fused disconnect details.

Ownership Identification: The customer is responsible to label all customer owned outdoor lighting luminaires in accordance with National Grid Construction Standards. See Figures 1 and 2.

Worker Qualifications: All customer work shall be completed only by personnel qualified to work in the electric supply space on a distribution pole (herein referred to as “Qualified Worker”) in accordance with OSHA 1910.269. An executed copy of the OSHA 1910-269 ACKNOWLEDGEMENT FOR THE USE OF QUALIFIED ELECTRICAL WORKERS form is mandatory.

Final Connections to National Grid 120/240 VAC or 120/208 VAC Secondary Conductors: For OVERHEAD supplied lighting, National Grid will permit a Qualified Worker to make all connections and disconnections of customer owned outdoor light supply conductors to the company owned secondary and grounding conductors. For UNDERGROUND supplied lighting, National Grid will permit a Qualified Worker to make all connections and disconnections of customer owned outdoor light supply conductors to the company owned secondary and grounding conductors provided that National Grid personnel are present to provide safety supervision and access to the underground facilities.

3. CONSTRUCTION DRAWINGS:

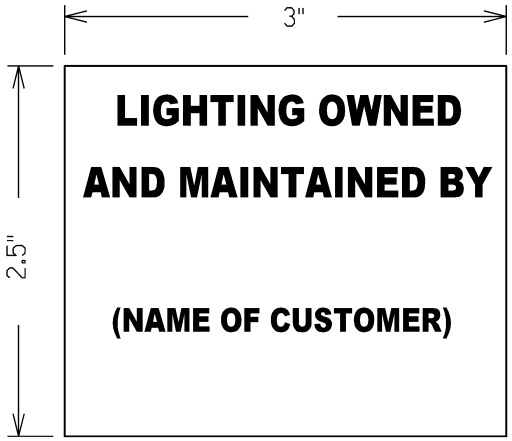

Figure 1 – Ownership Identification Label for Customer Owned Outdoor Luminaires

1. All customer owned outdoor light luminaires shall be identified with a label to clearly define ownership and maintenance responsibilities.

2. Ownership identification labels shall be reflective white with black lettering. See Figure 1.

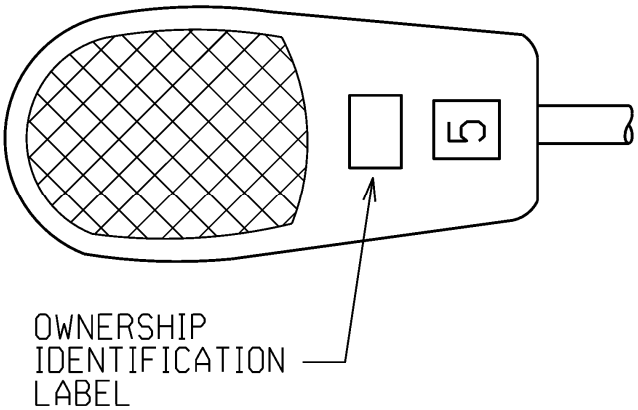

Figure 2 – Installation of Ownership Identification Label

1. Ownership identification label shall be installed on the lower door of a horizontal roadway luminaire such that it is clearly visible from the ground. See Figure 2.

2. For post top, floodlight, and other luminaires, the ownership identification label shall be installed on the luminaire housing in a location such that it is clearly visible from the ground.

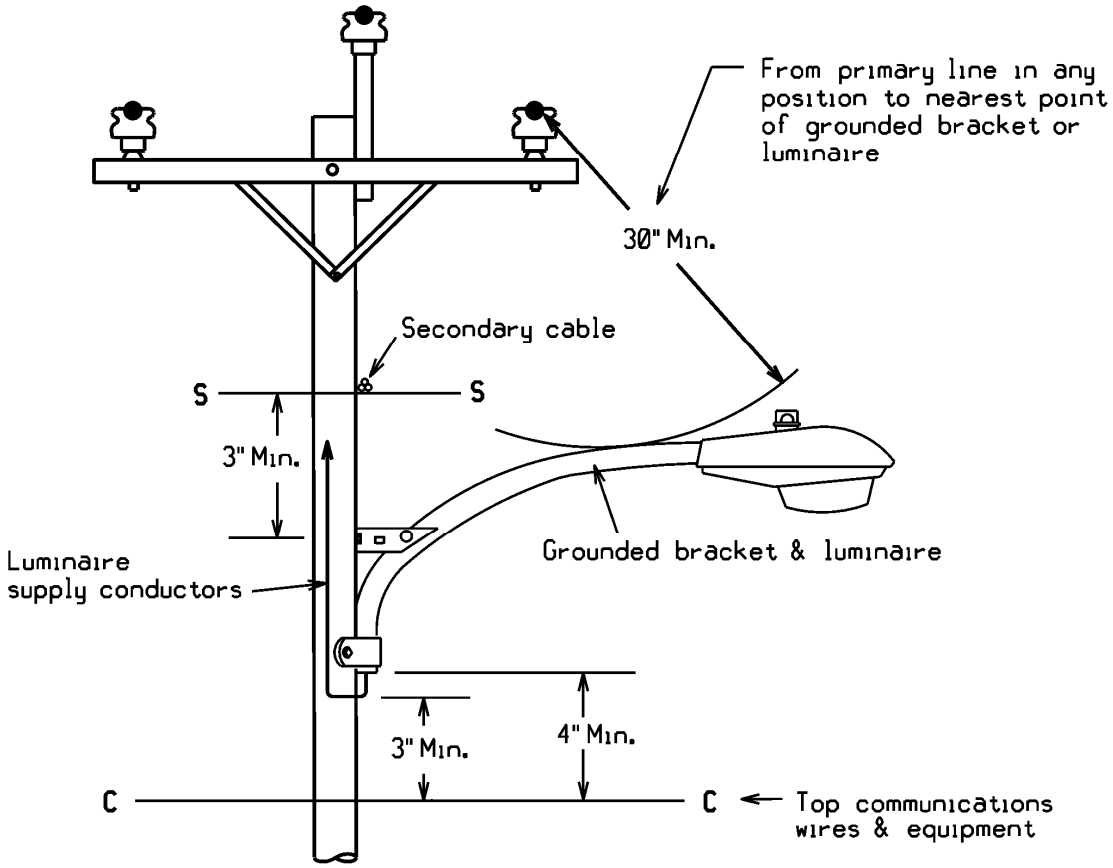

Figure 3 – Outdoor Light Clearance from Overhead Conductors

1. Primary Conductors – Maintain minimum 30-inch clearance from any primary conductor or cable to nearest point of grounded luminaire or bracket.

2. Secondary Conductors – Maintain minimum 3-inch vertical clearance from secondary wires or cable to nearest point of grounded luminaire bracket. (NESC Table 239-1)

3. Communications Cables – Maintain minimum 4-inch vertical clearance from closest communication cable to nearest point of grounded luminaire bracket. (NESC Table 238-2)

   Maintain minimum 3-inch clearance from closest communications cable to nearest point of luminaire supply conductors drip loop. Luminaire supply conductors must be covered with non-metallic flexible conduit. (NESC 238D)

4. Location on Pole – Always install the outdoor light BELOW the secondary conductors. This applies to new installations and any time an existing outdoor light is relocated or transferred to a new pole.

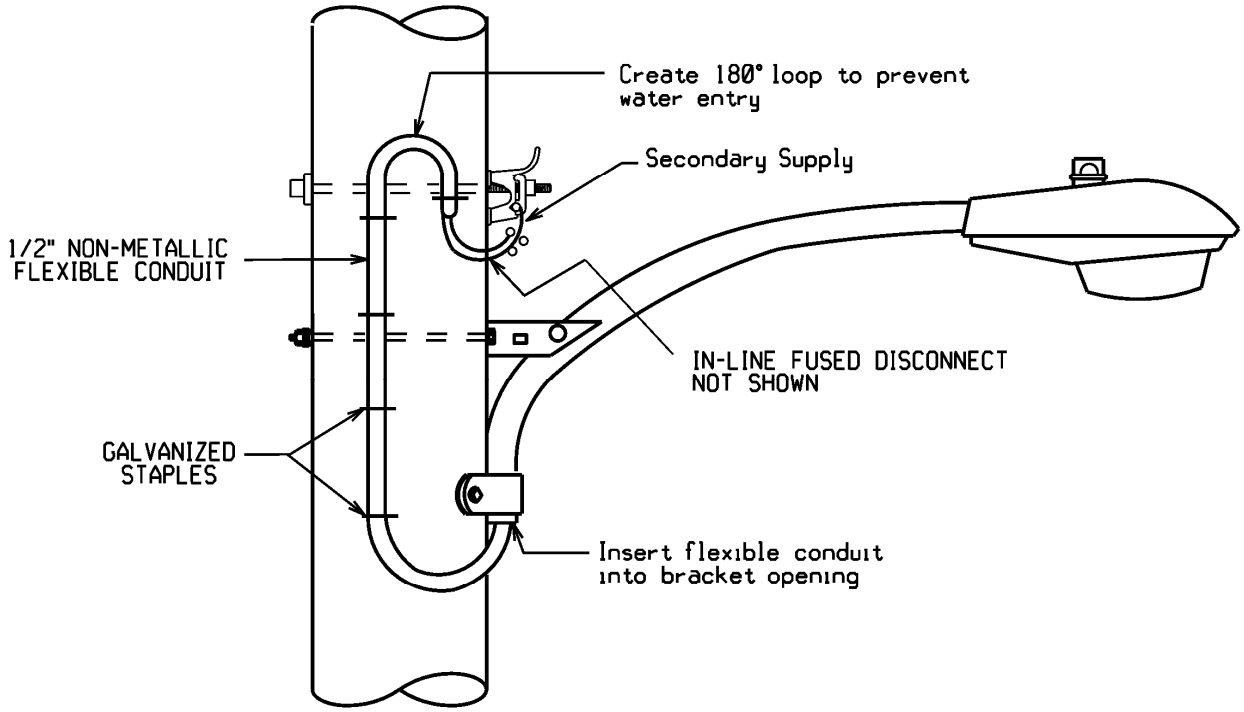

Figure 4 - Mechanical Protection for Overhead Supplied Outdoor Light Fixture Conductors

1. NESC Table 239G1 requires that all luminaire supply conductors (#10 AWG) shall have mechanical protection (1/2" non-metallic flexible conduit) installed from the point where they leave the pole end of the bracket to the connection to the secondary supply in order to take advantage of the clearance dimensions shown on page 5.

2. Insert the non-metallic flexible conduit into the bracket opening and extend up the pole to the secondary supply.

3. Create a 180 degree loop at the secondary supply to prevent rain water from entering and becoming trapped inside the flexible conduit.

4. Secure the non-metallic flexible conduit with galvanized staples spaced 12-inches apart or closer as necessary.

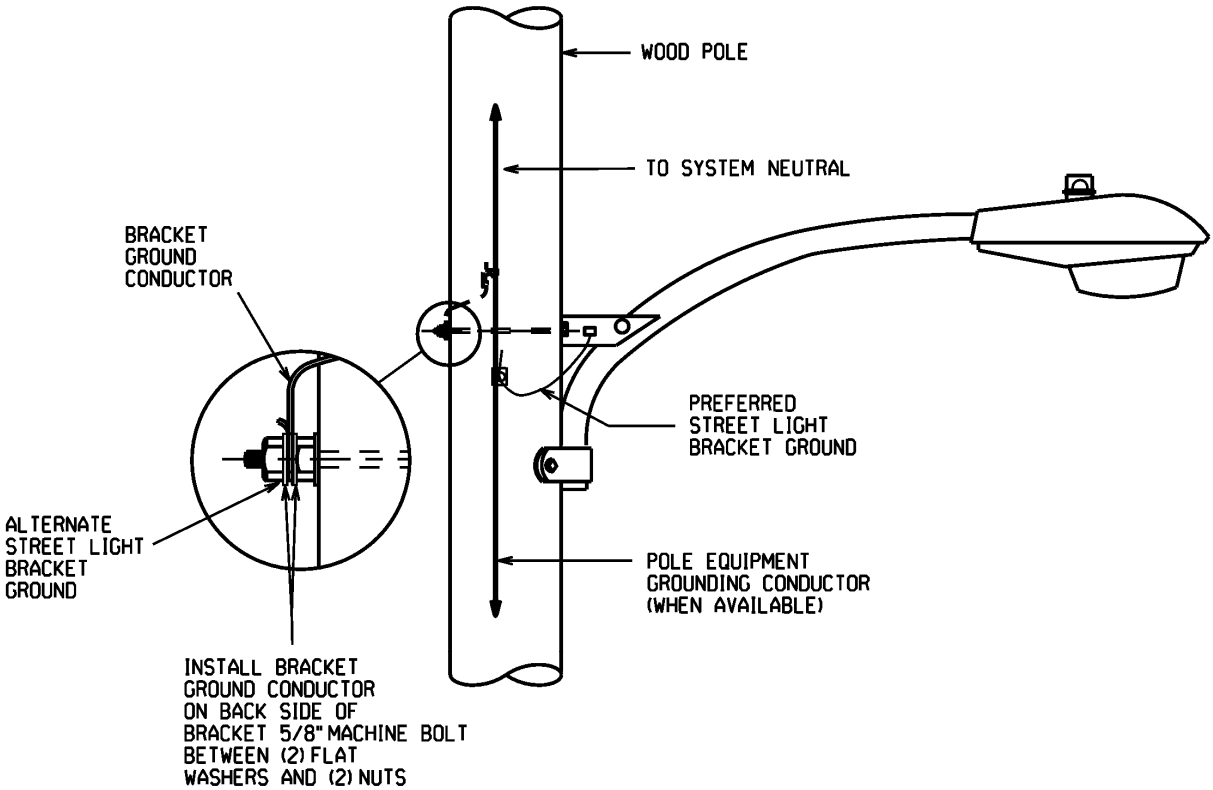

Figure 5 – Grounding of Overhead Supplied Outdoor Light

1. Every outdoor light bracket shall be grounded. Install a #4 AWG stranded copper conductor with enough length to connect to the pole equipment grounding conductor (when available) or to the secondary system neutral. Final connections to National Grid conductors may be made by a Qualified Worker.

2. Many brackets have a bracket grounding bolt located near the wood pole end of the bracket. If none exists, install a bracket grounding bolt on the bracket or connect grounding conductor to the back side of the 5/8" square head machine bolt which secures the bracket to the pole.

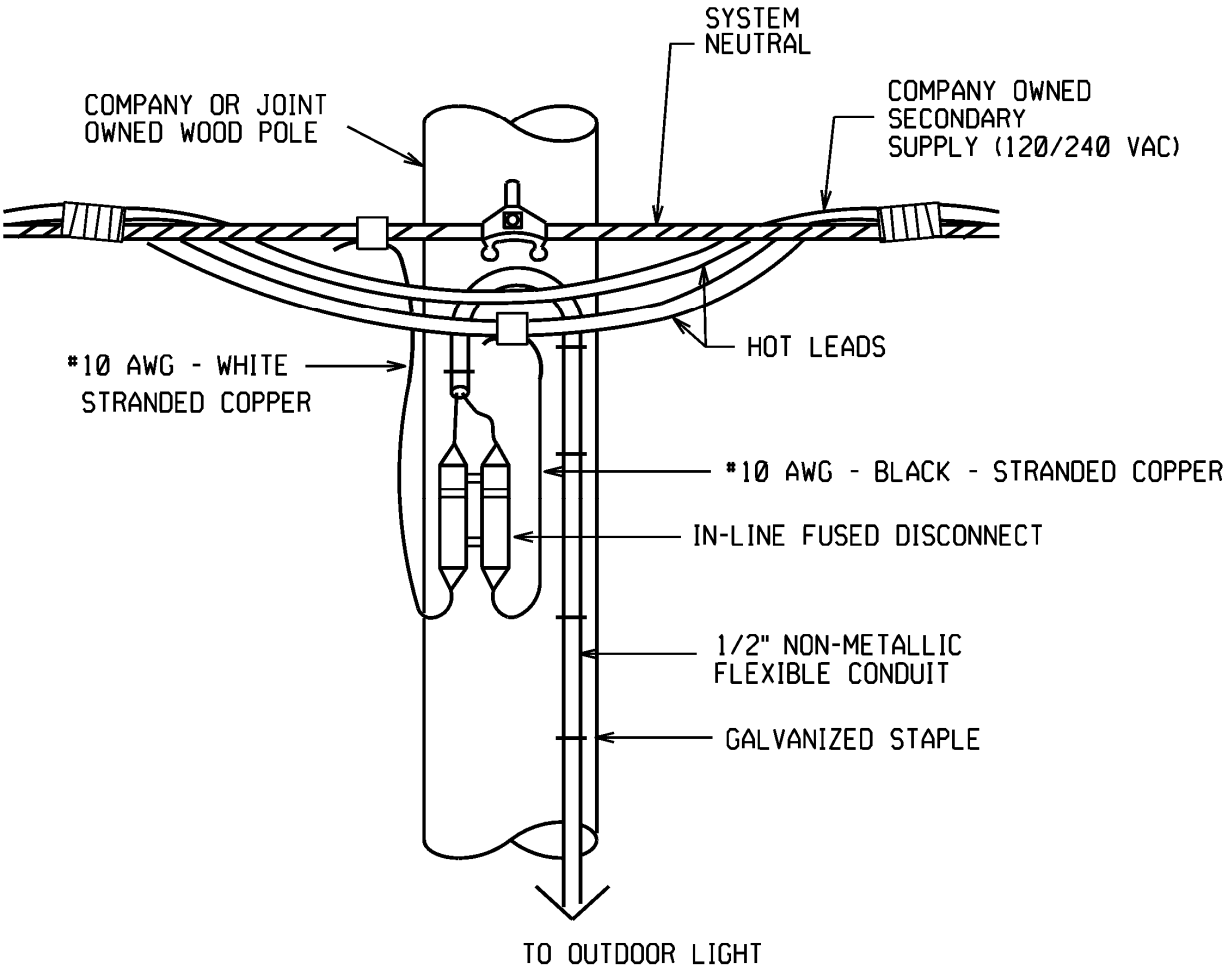

Figure 6 – Connection of Overhead Supplied Customer Owned Outdoor Light to National Grid Overhead Secondary Conductors

1. Every customer outdoor light shall have an in-line fused disconnect as described in “Electrical Separation” on page 3. See page 14 for details on the in-line fused disconnect.

2. Secure the in-line fused disconnect to the pole using a spring loaded conduit clip or galvanized staple.

3. Provide sufficient slack in the luminaire wiring to facilitate fuse replacement.

4. Outdoor lighting fixture wiring shall be #10 AWG 7-strand copper BLACK-WHITE with RHH/RHW/USE-2 insulation.

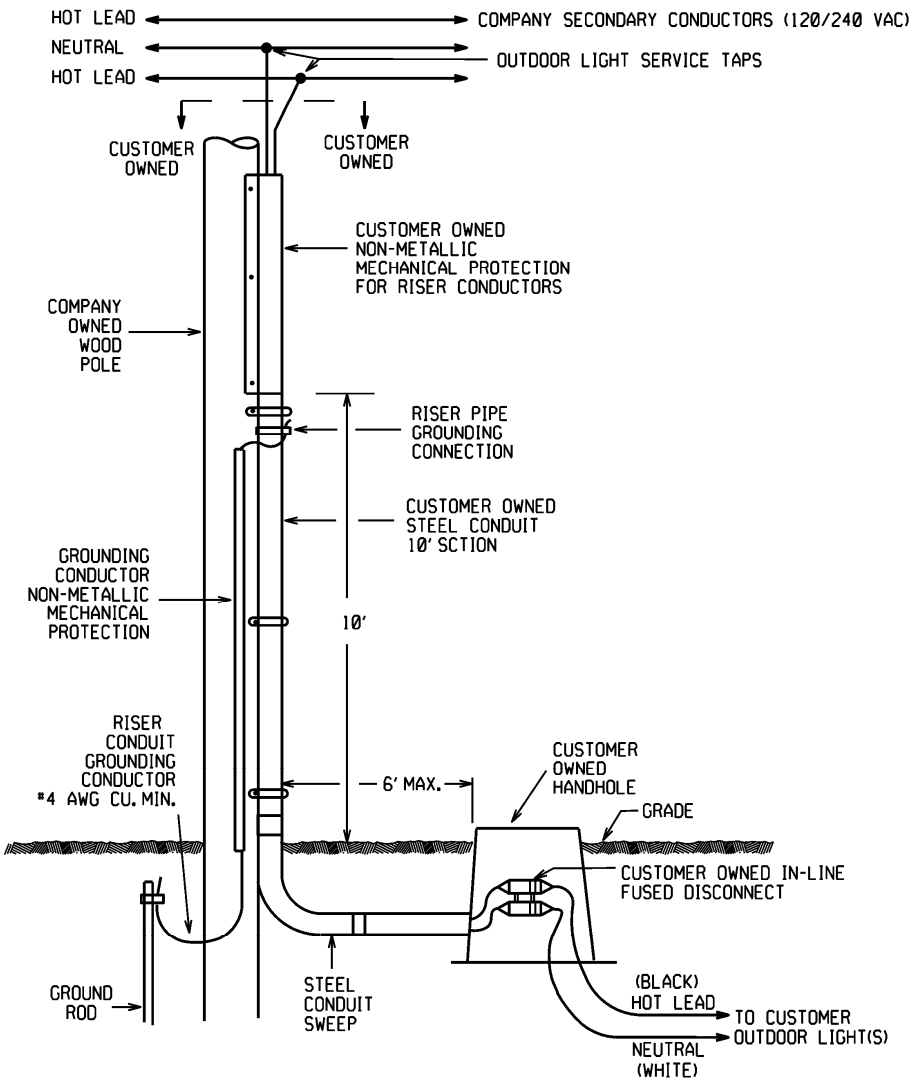

Figure 7 – Connection of Customer Owned Outdoor Lighting Riser to National Grid Overhead Secondary Conductors

1. Install customer owned handhole as shown in Figure 7. Customer owned handhole shall house the in-line fused disconnect. See page 14 for details on the in-line fused disconnect.

2. Always install the riser conduit away from vehicle traffic.

3. No more than (2) riser conduits may be attached to a pole. Consult National Grid Engineering if more than (2) risers are desired.

4. Underground supply conductors shall be #6 AWG 7-strand copper (minimum) with RHH/RHW/USE-2 insulation. Conductors shall be color coded BLACK = Hot lead, WHITE = Neutral.

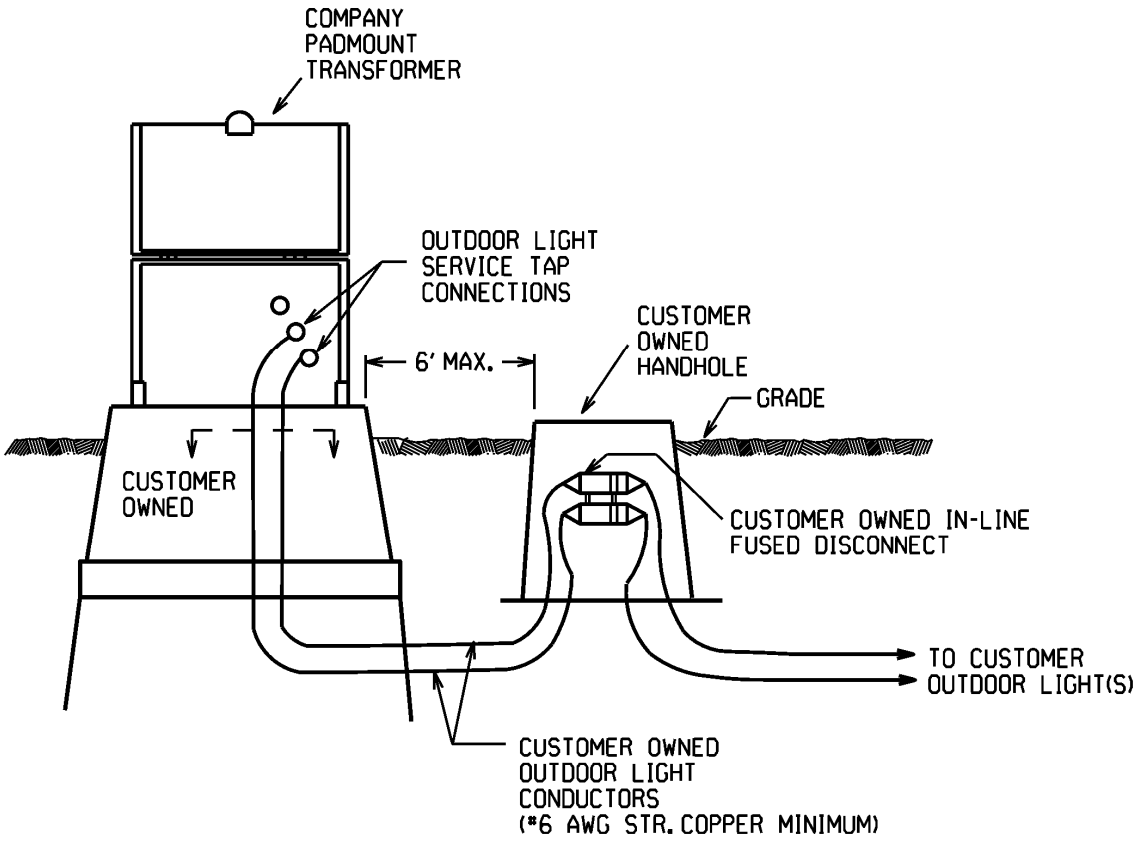

Figure 8 – Connection of Underground Supplied Street Light to National Grid Padmount Transformer

1. Install customer owned handhole as shown in Figure 8. Customer owned handhole shall house the in-line fused disconnect. See page 14 for details on the in-line fused disconnect.

2. Underground supply conductors shall be #6 AWG 7-strand copper (minimum) with RHH/RHW/USE-2 insulation. Conductors shall be color coded BLACK = Hot lead, WHITE = Neutral.

3. In cases where a new customer conduit is to be installed into a National Grid padmount transformer, National Grid shall determine the conduit entrance location at the padmount transformer foundation. The customer shall install the conduit to just outside this location. National Grid shall then create the opening in the padmount foundation and extend the customer conduit into the padmount foundation.

4. All electrical connections or disconnections to the secondary supply may be performed by a Qualified Worker, however, in every case, National Grid personnel shall be present to provide safety supervision and to unlock and relock the padmount transformer.

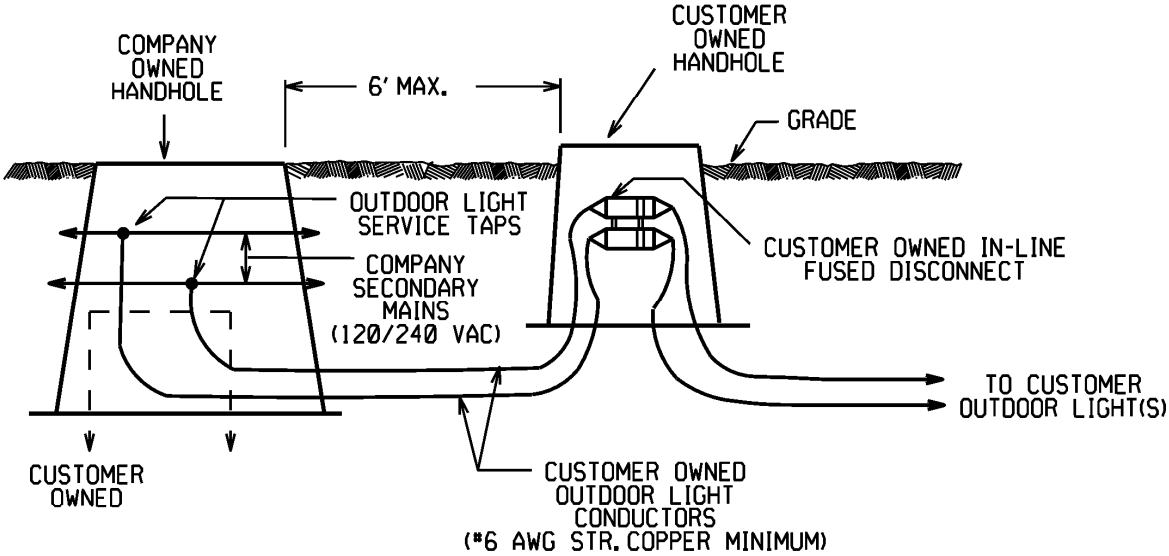

Figure 9 – Connection of Underground Supplied Customer Owned Outdoor Lighting to National Grid Handhole or Manhole – Standard Connection

1. Install customer owned handhole as shown in Figure 9. Customer owned handhole shall house the in-line fused disconnect. See page 14 for details on the in-line fused disconnect.

2. Underground supply conductors shall be #6 AWG 7-strand copper (minimum) with RHH/RHW/USE-2 insulation. Conductors shall be color coded BLACK = Hot lead, WHITE = Neutral.

3. In cases where a new customer conduit is to be installed into a National Grid manhole or handhole, National Grid shall determine the conduit entrance location in the manhole/handhole, The customer shall install the conduit to just outside this location. National Grid shall then create the opening in the manhole/handhole wall and extend the customer conduit into the manhole/handhole.

4. All electrical connections or disconnections to the secondary supply may be performed by a Qualified Worker, however, in every case National Grid personnel shall be present to provide safety supervision.

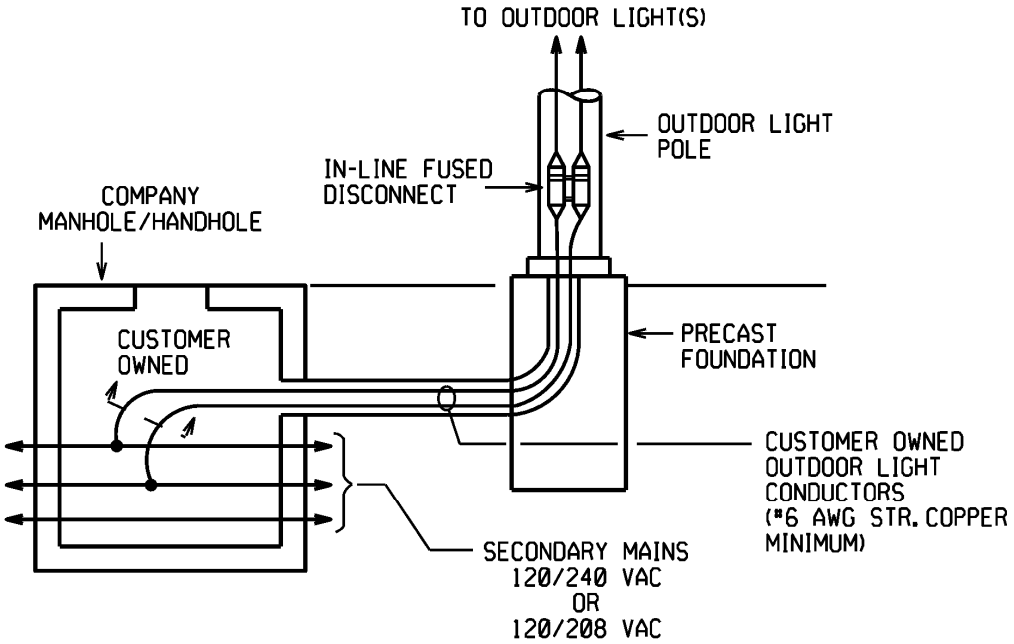

Figure 10 – Connection of Underground Supplied Customer Owned Outdoor Light to National Grid Handhole or Manhole – Non-Standard Connection

1. For all new installations and modifications to existing installations, the customer is required to install an in-ground handhole located as close as possible to the company provided electrical source point, as illustrated in Figures 7, 8, and 9.

2. In the rare case where the customer owned concrete outdoor lighting foundation is immediately adjacent to the National Grid manhole/handhole, installation of an in-ground customer owned handhole may be impossible. In this case, the in-line fused disconnect may be installed inside the pole access handhole. **This is allowed only in cases where no physical space exists to install the in-ground customer owned handhole.** Note that the #6 AWG underground supply conductors between the manhole and the base of the outdoor light are customer owned.

3. Underground supply conductors shall be #6 AWG 7-strand copper (minimum) with RHH/RHW/USE-2 insulation. Conductors shall be color coded BLACK = Hot lead, WHITE = Neutral.

4. In cases where a new customer conduit is to be installed into a National Grid manhole or handhole, National Grid shall determine the conduit entrance location in the manhole/handhole, The customer shall install the conduit to just outside this location. National Grid shall then create the opening in the manhole/handhole wall and extend the customer conduit into the manhole/handhole.

5. All electrical connections or disconnections to the secondary supply may be performed by a Qualified Worker, however, in every case National Grid personnel shall be present to provide safety supervision.

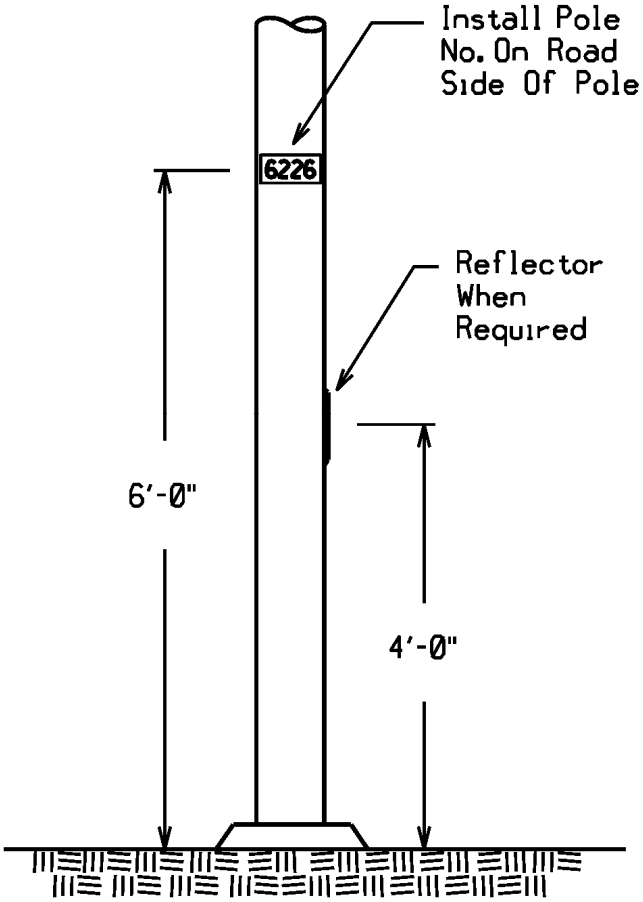

Figure 11 – Pole Numbering - Underground Supplied Customer Owned Lighting

1. Every underground supplied customer lighting pole shall be numbered in accordance with Figure 11.
2. Always use 1-3/4-inch x 3-inch, high intensity white reflective pole number decals.
3. Pole number decals shall be installed horizontal to each other as shown in Figure 11 – not vertical.

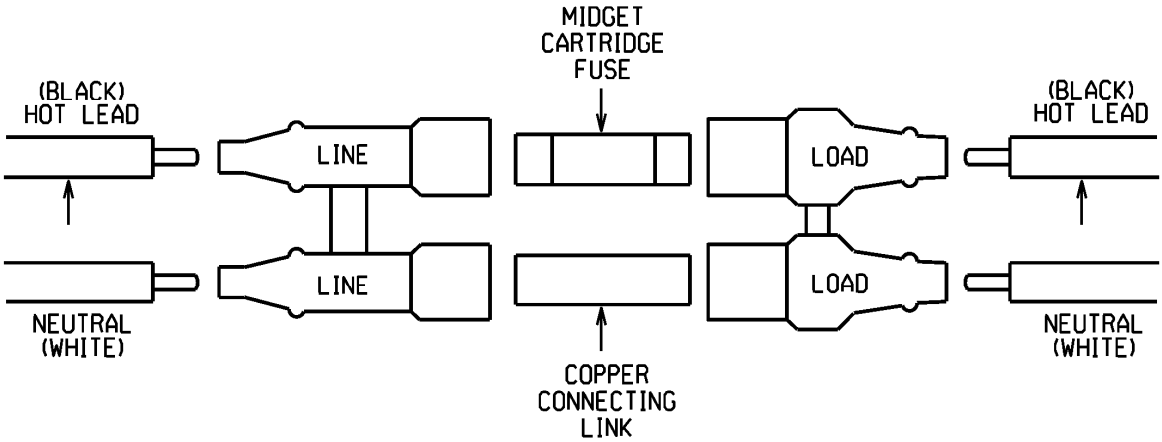

Figure 12 – In-Line Fused Disconnect Details

1. All customer owned outdoor lighting equipment shall be fused using a dual pole, watertight, in-line fuse holder and cartridge style fuse. This fuse, in addition to providing electrical protection, shall serve as a disconnection point for the customer owned outdoor lighting equipment.

2. Fuse Holder
   The fuse holder shall be a watertight device suitable for use in an outdoor environment.

   The fuse holder shall be totally insulated, thus having no exposed energized parts.

   The fuse holder shall accept #14 AWG - #6 AWG stranded copper conductors on both ends.

   The fuse holder shall be a dual pole device allowing simultaneous disconnection of both the 120 VAC hot lead (black wire) and the neutral conductor (white wire).

   The fuse holder shall be designed such that, when separated, the midget cartridge fuse and copper connecting link shall be held captive in the load end of the fuse holder.

   The fuse holder shall be polarized to prevent accidental reversal of the live leg and neutral connections.

3. Cartridge Fuse
   The fuse shall be a non-glass type, midget style cartridge fuse. Fuse dimensions shall be 13/32” diameter x 1½” length.

4. Neutral Connection
   The neutral conductor shall not be fused. Install a 13/32” diameter x 1½” length copper connecting link in place of a cartridge fuse.

5. Always provide sufficient slack in wiring to facilitate fuse replacement.

Specification for LED Luminaires

City of Pawtucket

INTRODUCTION

This specification provides the necessary information to allow for selection of LED luminaires which meet the key parameters of this project. Requirements were developed to meet the objectives of this project and allow for a common basis of design against which all proposals can be evaluated for suitability. Incomplete submittals or failure to meet any of the stated criteria may result in rejection of a proposal. Submittal entries will be evaluated on the basis of best overall value rather than lowest price.

1.0 RELATED DOCUMENTS

1.1 Contract Drawings and conditions of Contract (including General Conditions, Addendum to the General Conditions, Special Conditions, Division 01 Specifications Sections and all other Contract Documents) apply to the work of this section.

1.2 Model Specification for Networked Outdoor Lighting Control Systems, "Smart City Platform Requirements".

2.0 DEFINITIONS

2.1 Lighting terminology used herein is defined in IES RP-16. See referenced documents for additional definitions.

2.1.1 Exception: The term “driver” is used herein to broadly cover both drivers and power supplies, where applicable.

2.1.2 Clarification: The term “LED light source(s)” is used herein per IES LM-80 and TM-21 to broadly cover LED package(s), module(s), and array(s).

3.0 PRODUCT REQUIREMENTS

3.1 Tabulated summary of key parameters and product criteria.

Existing Luminaires			New Luminaire Requirements							
Luminaire Type	Lamp Wattage	Source	Minimum Initial Lumens	Maximum Wattage	Distribution Type	Input Voltage	Maximum Weight	Maximum EPA	Mounting	Driver
Cobra	50w	HPS	4600	40w	Type 2	120-277	12 lbs	0.3 ft^2	arm (2" nominal)	Dimmable
Cobra	70w	HPS	4600	40w	Type 2	120-277	12 lbs	0.3 ft^2	arm (2" nominal)	Dimmable
Cobra	100w	MH	7,100	60w	Type 2	120-277	12 lbs	0.3 ft^2	arm (2" nominal)	Dimmable
Cobra	100w	HPS	7,100	60w	Type 2	120-277	12 lbs	0.3 ft^2	arm (2" nominal)	Dimmable
Cobra	175w	MV	7,100	60w	Type 2	120-277	12 lbs	0.3 ft^2	arm (2" nominal)	Dimmable
Cobra	250w	HPS	15,500	140w	Type 2	120-277	21 lbs	0.5 ft^2	arm (2" nominal)	Dimmable
Cobra	400w	HPS	25,000	220w	Type 2	120-277	30 lbs	0.75 ft^2	arm (2" nominal)	Dimmable
Floodlight	250w	HPS	13,500	140w	6x6	120-277	47 lbs	3.1 ft^2	Yoke	Dimmable
Floodlight	400w	MV	13,500	140w	6x6	120-277	47 lbs	3.1 ft^2	Yoke	Dimmable
Floodlight	400w	HPS	18,500	220W	6x6	120-277	47 lbs	3.1 ft^2	Yoke	Dimmable

3.2 General requirements

3.2.1 Luminaires shall satisfy the key criteria summarized in section 4.1.

3.2.2 Transmissive optical components shall be applied in accordance with OEM design guidelines to ensure suitability for the environment (e.g., electromagnetic, thermal, mechanical, chemical).

3.2.2.1 Borosilicate or tempered glass optical enclosure is preferred

3.2.2.2 Any plastic materials used in the optical assembly that affect the light output and distribution shall be appropriately heat and UV resistant. Plastic materials shall have been evaluated and exhibit a Yellowness Index (YI) over the useful life of the product of no more than 30%. YI reference ASTM E313 (ASTM D1925). A list of relevant plastic materials used and the plastic material manufacturer's "YI" data report shall be provided with the bid documents.

3.2.3 Luminaire shall be designed for ease of component replacement and end-of-life disassembly.

3.2.4 LED light source(s) and driver(s) shall be RoHS compliant.

3.2.5 Luminaire shall accept the voltage or voltage range specified at 50/60 Hz, and shall operate normally for input voltage fluctuations of plus or minus 10 percent.

3.2.6 All internal components shall be assembled and pre-wired using modular electrical connections.

3.2.7 The following shall be in accordance with ANSI C136.37.

3.2.7.1 Ingress protection: minimum rating of IP66 for Optical assembly, and IP65 for Electrical components compartment.

3.3 Painted or finished luminaire surfaces exposed to the environment

3.3.1 Shall exceed a rating of 8 (per ASTM D1654) after 1000 hours of testing per ASTM B117.

3.3.2 The coating shall exhibit no greater than 30% reduction of gloss per ASTM D523, after 500 hours of QUV testing at ASTM G154 Cycle 6.

3.4 Vibration

3.4.1 All luminaires will meet requirements for Level 2 (bridge/overpass) per ANSI C136.31

3.5 Thermal management

3.5.1 Luminaire shall start and operate in ambient temperature range from -10C to 30C

3.5.2 Maximum rated case temperature of driver and other internal components shall not be exceeded when luminaire is operated in ambient temperature range specified.

3.5.3 Mechanical design of protruding external surfaces (heat sink fins) shall facilitate hose-down cleaning and discourage debris accumulation.

3.5.4 Non-passive means of cooling are not allowed. This includes the use of liquids or other mechanical cooling systems.

3.6 Photocontrol receptacle, and photocontrol

3.6.1 Receptacle

3.6.1.1 Luminaires to be supplied with a 7-pin ANSI C136.41 compliant receptacle with the dimming leads from the driver connected to the receptacle pads and specified in ANSI C136.41.

3.6.2 Photocontrol

3.6.2.1 Rated for minimum 20 years, with 10-Year Warranty

3.6.2.2 LED inrush protection with triac assisted relay

3.6.2.3 Extreme surge protection of 1280J/40kA utility or 2120J/40kA UL listed

3.6.2.4 Double thick enclosure and lens with additional UV inhibitor

3.6.2.5 UL listed to U.S. and Canadian safety standards

3.6.2.6 Voltage 120 to 480 VAC, 60Hz

3.6.2.7 Load rating: 1000 watts, 1800 VA ballast

3.6.2.8 Average power consumption: <0.5 watts @ 120V

3.7 Electrical safety testing

3.7.1 Luminaire shall be listed for wet locations by a U.S. Occupational Safety Health Administration (OSHA) Nationally Recognized Testing Laboratory (NRTL).

3.8 Electrical immunity

3.8.1 Luminaire shall meet the performance requirements specified in ANSI C136.2 for electrical immunity to an enhanced level (10kV/5kA)

3.8.2 Manufacturer shall indicate on submittal form (Appendix A) whether failure of the electrical immunity system can possibly result in disconnect of power to luminaire.

3.9 Interference and power quality

3.9.1 Luminaire shall comply with FCC 47 CFR part 15 interference criteria for Class A (non-residential) digital devices.

3.9.2 Luminaire shall comply with section 5.2.5 (luminaires rated for outdoor use) of ANSI C82.77 at full input power and across specified voltage range.

3.10 Color attributes

3.10.1 Color Rendering Index (CRI) shall be no less than 70.

3.10.2 Nominal Correlated Color Temperature (CCT) shall be 4000K +/- 8%

3.11 Identification

3.11.1 Luminaire shall have an external label per ANSI C136.15.

3.11.2 Luminaire shall have an internal label per ANSI C136.22.

4.0 PRODUCT REQUIREMENTS by product category

4.1 Roadway Luminaires

4.1.1 Optical Features

4.1.1.1 Prismatic borosilicate glass optics are preferred.

4.1.2 Electrical Features

4.1.2.1 Expected life of LED light engines of >100,000 hours at 25C.

4.1.2.2 LED's lumen depreciation equal to or greater than L85 at 100,000 hours.

4.1.2.3 Expected life of the electronic driver of 100,000 hours at a 25C ambient.

4.1.2.4 Surge protection device shall be connected in series with the luminaire load and shall disconnect power at the end of life. Device shall allow no more than 10% of pass-through to surge energy under either differential or common mode surge.

4.1.3 Mechanical Features

4.1.3.1 Die cast aluminum door frame and housing with the wildlife shield cast into the housing.

4.1.3.2 Paint finish to achieve a scribe creepage rating of 8 (per ASTM D1654) after >5,000 hours of exposure in a salt fog chamber (operated per ASTM B1117)

4.1.3.3 Mast arm mount is adjustable for arms from 1-1/4" to 2" (1-5/8" to 2-3/8" O.D.) diameter with 2-bolt clamping mechanism.

4.1.3.4 Tool-less entry to electrical compartment with 3 station terminal block and quick disconnects.

4.1.3.5 Bubble level located inside the electrical compartment for levelling of luminaire during installation.

4.2 Floodlights

4.2.1 Optical Features

4.2.1.1 Optical enclosure shall be a glass lens.

4.2.1.2 Shielding options available to control light trespass and uplight where required.

4.2.1.3 Segmented Miro 4 internal reflectors designed to produce beam pattern as specified in the tables in section 5.1.

4.2.2 Electrical Features

4.2.2.1 Expected life of LED light engines of >100,000 hours at 25C.

4.2.2.2 LED's lumen depreciation equal to or greater than L80 at 100,000 hours.

4.2.2.3 Expected life of the electronic driver of 100,000 hours at a 25C ambient.

4.2.2.4 Surge protection device shall be connected in series with the luminaire load and shall disconnect power at the end of life. Device shall allow no more than 10% of pass-through to surge energy under either differential or common mode surge.

4.2.3 Mechanical Features

4.2.3.1 Low copper content die cast aluminum A360 allow castings. Die cast aluminum housing with integral heat sink fins.

4.2.3.2 Paint finish to achieve a scribe creepage rating of 9 (per ASTM D1654) after >2,500 hours of exposure in a salt fog chamber (operated per ASTM B1117)

4.2.3.3 Tool free access to electrical compartment with stainless steel latches.

4.2.3.4 Knuckle adjustable to fit 2-3/8" to 2-7/8" tenon.

5.0 QUALITY ASSURANCE

5.1 Before approval and purchase, Owner may request luminaire sample(s) identical to product configuration(s) submitted for inspection. Owner may request IES LM-79 testing of luminaire sample(s) to verify performance is within manufacturer-reported tolerances.

5.2 Electrically test fully assembled luminaires before shipment from factory.

5.3 After installation, Owner may perform IES LM-50 field measurements to verify performance requirements, giving consideration to manufacturing tolerances and measurement uncertainties as outlined in IES LM-61 and NEMA LSD 63.

6.0 WARRANTY

6.1 Warranty shall be for a minimum period of 10 years, and shall cover maintained integrity and functionality of the following

6.1.1 Luminaire housing, wiring, and connections

6.1.2 LED light source(s)

6.1.2.1 Negligible light output from more than 15 percent of the LED packages constitutes luminaire failure.

6.1.3 LED driver(s)

6.2 Warranty period shall begin with the date of invoice, or as negotiated by owner such as in the case of an auditable asset management system.

7.0 MANUFACTURER SERVICES

7.1 Manufacturer shall provide on-site installation and troubleshooting support in addition to via telephone and/or email.

8.0 ELIGIBLE MANUFACTURERS

8.1 Any manufacturer offering products that comply with the required product performance and operation criteria may be considered.

8.2 All luminaires supplied must be from the same manufacturer.

8.3 US point of manufacture is required to include subassemblies (including LED Boards). Exceptions will be given for products manufactured in any territory that falls under NAFTA.

9.0 REQUIRED SUBMITTALS

9.1 Completed Appendix A submittal form

9.2 Product cutsheets

9.2.1 Luminaire cutsheets

9.2.2 Cutsheets for LED light source(s)

9.2.3 Cutsheets for LED driver(s)

9.2.3.1 Provide diagrams illustrating light output and input power as a function of control signal.

9.2.4 Cutsheets for surge protection device

9.3 Instructions for installation and maintenance

9.4 IES LM-79 luminaire photometric report(s) from an accredited test laboratory.

9.5 Lumen maintenance calculations and supporting test data

9.5.1 Shall be in accordance with LED Lighting Facts guidance.

9.5.1.1 Exception: calculations shall be based on 100,000 hours of operation and average ambient temperature of 25C

9.6 Computer-generated point-by-point photometric analysis of maintained light levels.

Existing Luminaires			Calculation - Site Details (ref Appendix B)											
Luminaire Type	Lamp Wattage	Source	Median Width	# vehicular lanes (total)	Width of one vehicular lane	Shoulder width (incl. curb and gutter)	IES pavement class	Berm width	Sidewalk width	Sidewalk on	mounting height	arm length	pole setback	pole spacing
Cobra	50w	HPS	0'	2	12'	4'	R3	3'	3'	both sides	25'	6'	2'	300'
Cobra	70w	HPS	0'	2	12'	4'	R3	3'	3'	both sides	25'	6'	2'	300'
Cobra	100w	MH	0'	2	12'	8'	R3	3'	3'	both sides	25'	6'	2'	350'
Cobra	100w	HPS	0'	2	12'	8'	R3	3'	3'	both sides	25'	6'	2'	350'
Cobra	175w	MV	0'	2	12'	8'	R3	3'	3'	both sides	25'	6'	2'	350'
Cobra	250w	HPS	0'	2	12'	8'	R3	3'	3'	both sides	30'	10'	2'	380'
Cobra	400w	HPS	2'	4	12'	8'	R3	3'	3'	both sides	30'	10'	2'	320'

9.6.1 Calculation/measurement points shall be per IES RP-8. Separated vehicular lanes, bikeways, and walkways shall be evaluated separately.

9.6.2 Calculations shall be for maintained values, i.e. Light Loss Factor (LLF) < 1.0, where LLF = LLD x LDD x LATF x MDF , and

9.6.2.1 Lamp Lumen Depreciation (LLD) shall be 0.90 or the value calculated in section 10.5, whichever is lower.

9.6.2.2 Luminaire Dirt Depreciation (LDD) = 0.90

9.6.2.3 Luminaire Ambient Temperature Factor (LATF) = 0.96 or value based upon the average ambient temperature specified in section 6.5, whichever is lower

9.6.2.4 Material Depreciation Factor (MDF) = 1.0 for optics made of borosilicate glass, 0.90 for optics made of acrylic, and .70 for optics made from polycarbonate.

9.6.2.5 Light Loss Factor calculation shall be detailed in photometric calculation.

9.6.3 Mesopic multipliers (i.e., effective luminance factors) shall not be used. All values shall assume photopic visual adaptation.

9.6.4 Submit IES LM-63 format electronic file containing luminous intensity data associated with submitted LM-79 report(s) and used for point-by-point calculations.

9.7 Summary of reliability testing performed for LED driver(s)

9.8 Written product warranty as per section 7.0 below

9.9 Safety certification and file number indicating compliance with UL 1598

9.9.1 Applicable testing bodies are determined by the US Occupational Safety Health Administration (OSHA) as Nationally Recognized Testing Laboratories (NRTL) and include: CSA (Canadian Standards Association), ETL (Edison Testing Laboratory), and UL (Underwriters Laboratory).

9.10 Documentation from the luminaire and controls manufacturer(s) confirming interoperability of their products and identifying the manufacturer responsible for resolving any interoperability issues.

Appendix A— Product Submittal Form

Product Information		
Luminaire Designation (what this luminaire replaces)		
Luminaire Manufacturer		
Luminaire model number		
Performance / Specification Compliance	**Ability to Meet (Yes / No)**	**Supporting information location (name and page)**
Exceeds minimum initial lumens	Yes ☐ No ☐	
Below maximum allowable wattage	Yes ☐ No ☐	
Meets all technical specifications Sections 4 & 5 (if 'NO' then please list points of deviation in comments below)	Yes ☐ No ☐	
Spec Sheet /cutsheet included	Yes ☐ No ☐	
LED spec sheet included	Yes ☐ No ☐	
LED driver spec sheet included	Yes ☐ No ☐	
Surge protection device cutsheet included	Yes ☐ No ☐	
Surge protection device 'fails off'	Yes ☐ No ☐	
Installation and maintenance instructions included	Yes ☐ No ☐	
LM-79 files included	Yes ☐ No ☐	
Lumen maintenance calculation provided	Yes ☐ No ☐	
Lighting calculations provided	Yes ☐ No ☐	
Meets lighting performance requirements	Yes ☐ No ☐	
Light loss factor claculation shown	Yes ☐ No ☐	
Warranty information provided (10 year)	Yes ☐ No ☐	
Interoperability statement provided	Yes ☐ No ☐	
Product meets manufacturer eligibility requirements	Yes ☐ No ☐	
Supporting Comments		

Appendix B – Pole Layout Illustrations

The plan-view drawings provided here illustrate pole layouts indicated in section 4.1. The drawings are not to scale.

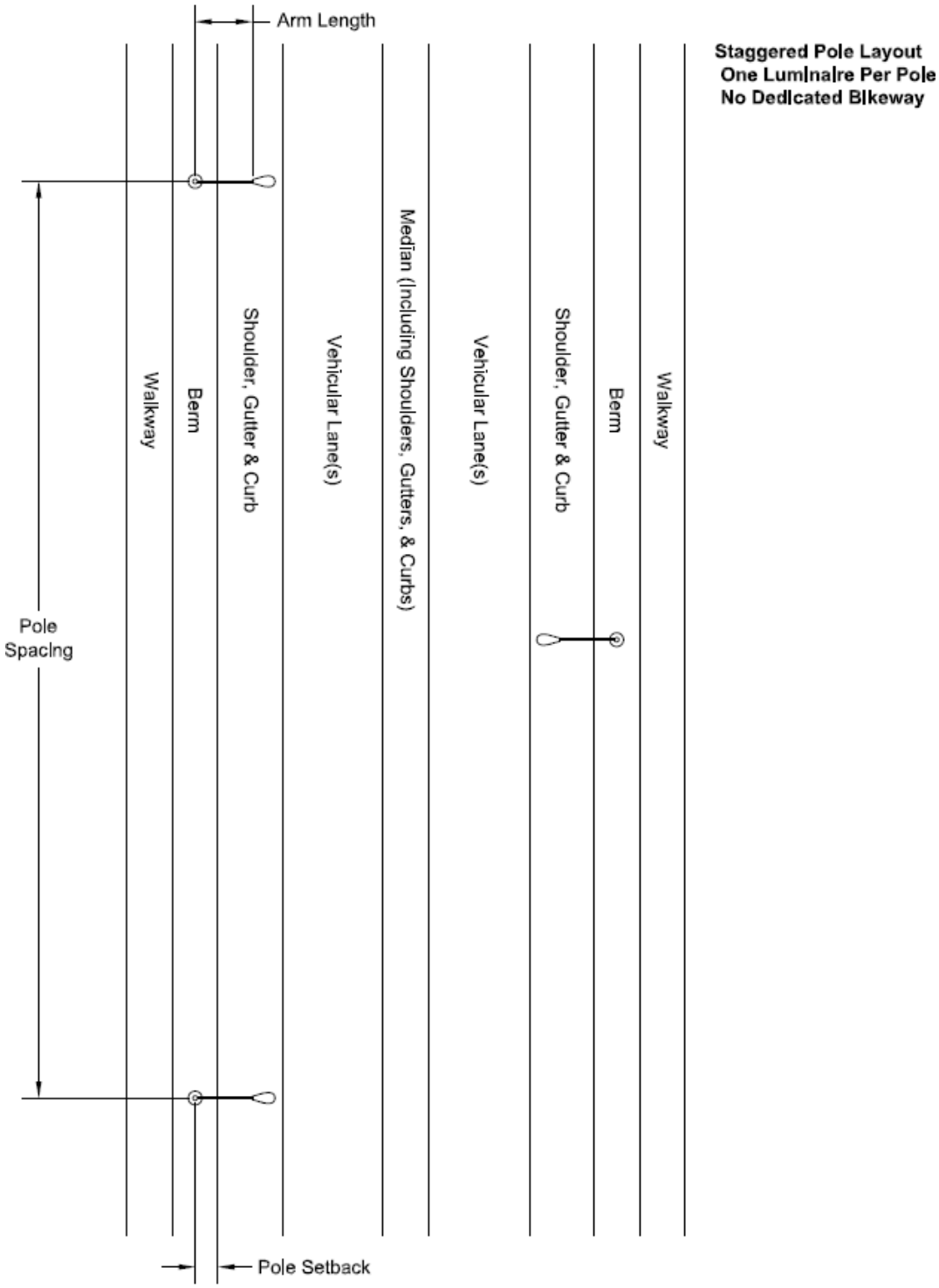

Smart City Platform Requirements

1. Introduction and Objectives

The City of Pawtucket is currently accepting proposals for an open-standards Smart City Platform that is scalable and designed to support future Smart City initiatives and sensor-based city services.

The City of Pawtucket intends to replace the existing streetlight luminaires with dimmable light emitting diode (LED) streetlight luminaires and a networked outdoor lighting control solution that can serve as an extensible Smart City platform, which supports sensor and analytics based services for the city and its citizens.

The main objectives are to:

- Reduce energy costs by coupling energy efficient LEDs with Smart City services
- Reduce operational costs by controlling and maintaining the streetlights through the use of a wireless monitoring and control system
- Increase energy efficiency, public safety and visual comfort by adjusting lights based on ambient light and movement detected in the area of the lights
- Reduce labor costs in maintaining and operating the City's streetlights
- Lay the foundation for a scalable city network that supports city and public Wi-Fi in strategic areas
- Minimize the number of wireless devices installed on city streets by enabling streetlights as extensible hubs for a network of sensor

A Smart City Platform conceptually consists of a three interacting sets of components:

1. **Central Management System**: a computer environment that functions as the core of a Smart City Platform by providing all shared System services, and consolidating and storing (or managing the storage of) all System data, and exposes system data to users and other applications through a user-interface and application programming interfaces
2. **Field Devices**: Networked sensors and control points (hardware and embedded software) installed in the field. They function together to adaptively control and remotely monitor Luminaires as well as provide data to enable Smart City services such as smart parking, traffic analytics and public safety.
3. **Backhaul Communication Network:** The network enabling communications between field devices, the central management system and mobile devices.

2. Central Management System

The Central Management System (CMS) is a computer environment that functions as the core of a Smart City Platform. The CMS shall be designed to give near-real-time control and status of City streetlights and all installed Field Devices. The CMS shall be able to set varied

schedules across groups of lights to save energy while providing improved lighting and safety to citizens.

CMS shall have robust functionality and a user-friendly interface. It shall communicate prompt messages regarding fixture and Field Device status. The CMS shall be able to provide sophisticated and accurate data related to energy use.

The CMS shall be cloud-based in order to minimize the demands on city IT infrastructure and allow for easily scaling additional services. It shall include monitoring and alerting of status, availability and security of all Field Devices and back-end applications on 24/7 basis.

The CMS shall support open standards and Application Programming Interfaces (APIs) to enable the City and partners to build future applications, new services and integrate with existing systems.

A commissioning report demonstrating compliance with the technical requirements in the following tables shall be provided.

Technical requirements and response template:

Key requirements	**Ability to meet (Yes / No)**	**Proposal response location (name and page)**
System scalability: 8,000 min. control points	YES □ NO □	
System upgradability: additional 20,000 control points possible	YES □ NO □	
Cloud hosted	YES □ NO □	
Secure communications	YES □ NO □	
Ability to create different user groups with different permissions	YES □ NO □	
Capable of storing pole number, location, fixture model, input voltage, wattage	YES □ NO □	
Retrieves and stores luminaire status, energy usage, temperature, light level, occupancy, jolt	YES □ NO □	
Ability to group fixtures	YES □ NO □	
Capable of manual control	YES □ NO □	
Ability to create custom control schedules	YES □ NO □	
Schedules allow a min. of 8 times / events per day	YES □ NO □	
Capable of presence-based lighting control	YES □ NO □	
Automated alerts of communications loss, control point errors, under/over power	YES □ NO □	
Capable of sending automated alerts by text (SMS) or email	YES □ NO □	
Available Application Programming Interface	YES □ NO □	

3. Field Devices

Field Devices shall be easy to install and internally integrated with the lighting fixture or use a standard 5/7-pin NEMA twist-lock photocell receptacle (ANSI C136.41). The devices shall have multiple connectivity options (e.g., WiFi, cellular) to function on different Backhaul Communication Networks deployed based on location characteristics and signal quality.

Field Devices shall have integrated sensors to create an infrastructure for collecting the data, aggregating and providing access to city applications and services. Ambient light detection, power consumption, and presence detection sensors shall be integrated to support smart lighting control through the CMS. Additionally, Field devices shall support wire theft determination through detection of jolt of the control point in addition to loss of electrical service.

There shall be an available option to add video sensors to the light fixture to support Smart Cities applications, like parking, traffic monitoring, and security. The video sensors shall be able to communicate wirelessly without requiring dedicated physical network connection and shall have embedded analytics to create distinct data streams. Video sensor options shall have onboard storage capabilities while supporting the option to stream video and integrate with video management systems (VMS.)

The system must support open standards and APIs to allow the City or partners to access and utilize data collected to build applications, services and integrate systems.

Lastly, Field Devices shall be future proof with the option to update firmware remotely and integrate new sensors without replacing existing controllers and sensors.

Technical requirements and response template:

Key requirements	Ability to meet (Yes / No)	Proposal response location (name and page)
Safety Act designated	YES □ NO □	
Capable of operation in ambient temp: -30 degrees C to 55 degrees C	YES □ NO □	
IP 65	YES □ NO □	
Input Voltage: Universal AC 120-277 (and 480V)	YES □ NO □	
Internal or NEMA C136.41 5/7-pin integrations	YES □ NO □	
Capable of turning luminaire on/off	YES □ NO □	
Capable of dimming luminaire using 0-10V signal	YES □ NO □	
Capable of executing a command from Central Management System in under 2 seconds	YES □ NO □	
Capable of measuring energy consumption for luminaire	YES □ NO □	

Capable of measuring energy consumption for controller and auxiliary loads	YES □ NO □	
Energy consumption accuracy of ±0.5% when operating with PF 0.9	YES □ NO □	
Capable of measuring and reporting temperature, ambient light, presence, jolt	YES □ NO □	
Provide auxiliary AC and DC power for additional sensors and devices	YES □ NO □	
Ability to integrate additional sensors with controllers (without device replacement)	YES □ NO □	
Available video sensor option	YES □ NO □	
Video sensor option has two HD (min. 720p) cameras, embedded and programmable analytics, integrated storage (min. 256 GB), ability to communicate wirelessly	YES □ NO □	
Capable of upgrading firmware over backhaul network	YES □ NO □	

4. Backhaul Communication Network

A Backhaul Communication Network links the Central Management System to one or more Field Devices or networks of Field Devices. A Backhaul Communication Network shall support high-bandwidth / low-latency services to enable smart city applications, such as ability to backhaul data from additional sensors and devices including future sensor options. The Backhaul Communication Network may at Vendor discretion leverage different high-bandwidth / low-latency backhaul technologies in different areas based on intended applications and cost considerations (e.g., a combination of Wi-Fi in central business areas and cellular and/or fiber optic network in more diffuse or residential areas). However, at a minimum, the Backhaul Communication Network shall support Wi-Fi access in City of Pawtucket-designated areas to serve as a common, expandable infrastructure for smart city services and communications.

The Backhaul Communication Network shall be highly scalable, with the potential to be extended into new geographic areas, increase performance, and incorporate other assets to expand functionality and capabilities in the future.

Wi-Fi shall be used in City of Pawtucket-designated areas (e.g., downtown and commercial areas of the City) for a true multi-purpose network that offers sufficient bandwidth and response time to support additional sensors and future city services applications (e.g. traffic, parking, public safety). The Wi-Fi network shall support the capability to add dedicated public or city services Wi-Fi domains to support public or municipal Internet access.

If existing cellular networks are utilized to cover the more spread-out and residential areas of the city, data backhaul contracts shall be negotiated and maintained by Vendor. In general, all Backhaul Communication Network costs, including design and installation, backhaul

connections and data backhaul fees, and monitoring and management shall be provided by Vendor.

Technical requirements and response template:

Key requirements	Ability to meet (Yes / No)	Proposal response location (name and page)
Open, standard-based communications protocols	YES □ NO □	
Secure communications	YES □ NO □	
Access limitation to authenticated and authorized devices	YES □ NO □	
Round trip travel time for an average message (up to 1024 bytes) of less than 3 seconds	YES □ NO □	
Capable of providing Wi-Fi (802.11)	YES □ NO □	
Capable of providing municipal and/or public internet access	YES □ NO □	

Appendix A - Consolidated Response Checklist

Proposer must affirm that their products meet all the product minimum requirements, and provide a signature to certify the veracity of the input data. Appendix A is a checklist intended to summarize minimum technical requirements and desired product features to facilitate the fair comparison of Proposals. Proposers may describe additional or alternative features in their narrative responses, but Appendix A must be completed for responses to be thoroughly reviewed.

Proposer Name: _____

Specification section	Key requirements	Ability to meet (Yes / No)	Proposal response location (name and page)
Central Management System			
2	System scalability: 8,000 min. control points	YES □ NO □	
2	System upgradability: additional 20,000 control points possible	YES □ NO □	
2	Cloud hosted	YES □ NO □	
2	Secure communications	YES □ NO □	
2	Ability to create different user groups with different permissions	YES □ NO □	
2	Capable of storing pole number, location, fixture model, input voltage, wattage	YES □ NO □	
2	Retrieves and stores luminaire status, energy usage, temperature, light level, occupancy, jolt	YES □ NO □	
2	Ability to group fixtures	YES □ NO □	
2	Capable of manual control	YES □ NO □	
2	Ability to create custom control schedules	YES □ NO □	
2	Schedules allow a min. of 8 times / events per day	YES □ NO □	
2	Capable of presence-based lighting control	YES □ NO □	
2	Automated alerts of communications loss, control point errors, under/over power	YES □ NO □	
2	Capable of sending automated alerts by text (SMS) or email	YES □ NO □	
2	Available Application Programming Interface	YES □ NO □	
Field Devices			

3	Safety Act designated	YES □ NO □	
3	Capable of operation in ambient temp: -30 degrees C to 55 degrees C	YES □ NO □	
3	IP 65	YES □ NO □	
3	Input Voltage: Universal AC 120-277 (and 480V)	YES □ NO □	
3	Internal or NEMA C136.41 5/7-pin integrations	YES □ NO □	
3	Capable of turning luminaire on/off	YES □ NO □	
3	Capable of dimming luminaire using 0-10V signal	YES □ NO □	
3	Capable of executing a command from Central Management System in under 2 seconds	YES □ NO □	
3	Capable of measuring energy consumption for luminaire	YES □ NO □	
3	Capable of measuring energy consumption for controller and auxiliary loads	YES □ NO □	
3	Energy consumption accuracy of ±0.5% when operating with PF 0.9	YES □ NO □	
3	Capable of measuring and reporting temperature, ambient light, presence, jolt	YES □ NO □	
3	Provide auxiliary AC and DC power for additional sensors and devices	YES □ NO □	
3	Ability to integrate additional sensors with controllers (without device replacement)	YES □ NO □	
3	Available video sensor option	YES □ NO □	
3	Video sensor option has two HD (min. 720p) cameras, embedded and programmable analytics, integrated storage (min. 256 GB), ability to communicate wirelessly	YES □ NO □	
3	Capable of upgrading firmware over backhaul network	YES □ NO □	
Backhaul Communication Network			
4	Open, standard-based communications protocols	YES □ NO □	
4	Secure communications	YES □ NO □	
4	Access limitation to authenticated and authorized devices	YES □ NO □	

4	Round trip travel time for an average message (up to 1024 bytes) of less than 3 seconds	YES □ NO □	
4	Capable of providing Wi-Fi (802.11)	YES □ NO □	
4	Capable of providing municipal and/or public internet access	YES □ NO □	

Signature affirming completeness / veracity of responses: _____

Name of signatory: _____

Title of signatory: _____

Appendix G1
Summary

Summary for City of Pawtucket Lighting Inventory as of March 2, 2012

Count of Bill Print and Tariff Description			Component Type	
Customer Name	Account No	Bill Print and Tariff Description	Luminaire	Pole
CITY OF PAWTUCKET	03371-64002	LUM HPS FLD 250W	10	
		LUM HPS FLD 400W	17	
		POLE - WOOD		4
	90435-67003	LUM HPS FLD 250W	29	
		LUM HPS FLD 400W	43	
		LUM HPS POST 100W	2	
		LUM HPS RWY 100W	1435	
		LUM HPS RWY 100W-TW	2	
		LUM HPS RWY 250W	986	
		LUM HPS RWY 250W-TW	12	
		LUM HPS RWY 400W	6	
		LUM HPS RWY 50W	37	
		LUM HPS RWY 70W	3138	
		LUM MV FLD 400W-TW	2	
		LUM MV RWY 100W	1	
		LUM MV RWY 175W	3	
		LUM MV RWY 400W	4	
		POLE - WOOD		1
		POLE FIBER PT <25FT		2
		POLE METAL =>25FT		181
CITY OF PAWTUCKET Total			5727	188
PAWTUCKET HOUSING AUTHORITY	03371-62008	LUM HPS FLD 400W	16	
		LUM HPS RWY 100W	2	
		LUM MV RWY 175W	12	
		POLE - WOOD		1
PAWTUCKET HOUSING AUTHORITY Total			30	1
PAWTUCKET SCH DEPT	28129-70006	LUM HPS FLD 250W	3	
		LUM HPS FLD 400W	1	
	28129-71003	LUM HPS FLD 250W	2	
		LUM HPS FLD 400W	5	
	90435-66006	LUM HPS FLD 400W	7	
PAWTUCKET SCH DEPT Total			18	
PAWTUCKET SCHOOL	77966-82004	LUM HPS FLD 250W	3	
		LUM HPS FLD 400W	2	
PAWTUCKET SCHOOL Total			5	
PAWTUCKET SCHOOL DEP	15698-25002	LUM HPS FLD 400W	2	
	15698-26009	LUM HPS FLD 250W	4	
		LUM HPS FLD 400W	1	
	28129-72000	LUM HPS FLD 400W	7	
	40585-10002	LUM HPS FLD 250W	4	
		LUM HPS FLD 400W	1	
	40585-11009	LUM HPS FLD 250W	2	
		LUM HPS FLD 400W	5	
	40585-12006	LUM HPS FLD 250W	3	
		LUM HPS FLD 400W	6	
	53045-39003	LUM HPS FLD 250W	3	
		LUM HPS FLD 400W	2	
	53045-82004	LUM HPS FLD 400W	2	
	65507-94008	LUM HPS FLD 250W	2	
		LUM HPS FLD 400W	2	

PAWTUCKET SCHOOL DEP	90435-65009	LUM HPS FLD 250W	8	
PAWTUCKET SCHOOL DEP Total			54	
Grand Total			5834	189

Bill Print and Tariff Description Key
FIBER = Fiberglass
FLD = Flood light or Area light
HPS = High Pressure Sodium
LUM = Luminaire (the light fixture)
METAL = Brushed Aluminum
MV = Mercury Vapor
POST/PT = Post Top
RWY = Roadway, or Street light

Appendix G1 (Inventory)

City of Pawtucket
Lighting Inventory as of March 2, 2012

Pole No	Pole Suffix	Light Sequ No	Street Name	Street Suffix	NGrid Route No	Source Type	Pole Use	Component Type	Bill Print and Tariff Description	Status	Wattage	Account No	Rate	Customer Name
0007	000	1	ABBOTT	ST	3	Overhead	Distribution	Luminaire	LUM HPS RWY 100W	Active	100	90435-67003	S14	CITY OF PAWTUCKET
0008	000	1	ABBOTT	ST	3	Overhead	Distribution	Luminaire	LUM HPS RWY 70W	Active	70	90435-67003	S14	CITY OF PAWTUCKET
0008	000	2	ABBOTT	ST	3	Overhead	Distribution	Luminaire	LUM HPS FLD 400W	Active	400	90435-67003	S14	CITY OF PAWTUCKET
0008	000	3	ABBOTT	ST	3	Overhead	Distribution	Luminaire	LUM HPS FLD 400W	Active	400	90435-67003	S14	CITY OF PAWTUCKET
0012	000	1	ABBOTT	ST	3	Overhead	Distribution	Luminaire	LUM HPS RWY 70W	Active	70	90435-67003	S14	CITY OF PAWTUCKET
0012	000	2	ABBOTT	ST	3	Overhead	Distribution	Luminaire	LUM HPS FLD 400W	Active	400	90435-67003	S14	CITY OF PAWTUCKET
0013	000	1	ABBOTT	ST	3	Overhead	Distribution	Luminaire	LUM HPS RWY 70W	Active	70	90435-67003	S14	CITY OF PAWTUCKET
0013	000	2	ABBOTT	ST	3	Overhead	Distribution	Luminaire	LUM HPS FLD 400W	Active	400	90435-67003	S14	CITY OF PAWTUCKET
0005	000	1	ABRAM	ST	4	Overhead	Distribution	Luminaire	LUM HPS RWY 70W	Active	70	90435-67003	S14	CITY OF PAWTUCKET
0006	000	1	ABRAM	ST	4	Overhead	Distribution	Luminaire	LUM HPS RWY 70W	Active	70	90435-67003	S14	CITY OF PAWTUCKET
0007	000	1	ABRAM	ST	4	Overhead	Distribution	Luminaire	LUM HPS RWY 70W	Active	70	90435-67003	S14	CITY OF PAWTUCKET
0001	000	1	ACORN	ST	5	Overhead	Distribution	Luminaire	LUM MV RWY 100W	Active	100	90435-67003	S14	CITY OF PAWTUCKET
0002	000	1	ADIN	ST	6	Overhead	Distribution	Luminaire	LUM HPS RWY 70W	Active	70	90435-67003	S14	CITY OF PAWTUCKET
0001	000	1	AIGAN	PL	7	Overhead	Distribution	Luminaire	LUM HPS RWY 70W	Active	70	90435-67003	S14	CITY OF PAWTUCKET
0002	000	1	AIGAN	PL	7	Overhead	Distribution	Luminaire	LUM HPS RWY 70W	Active	70	90435-67003	S14	CITY OF PAWTUCKET
0003	000	1	AIGAN	PL	7	Overhead	Distribution	Luminaire	LUM HPS RWY 70W	Active	70	90435-67003	S14	CITY OF PAWTUCKET
0001	000	1	AIKEN	ST	8	Overhead	Distribution	Luminaire	LUM HPS RWY 70W	Active	70	90435-67003	S14	CITY OF PAWTUCKET
0002	000	1	AIKEN	ST	8	Overhead	Distribution	Luminaire	LUM HPS RWY 70W	Active	70	90435-67003	S14	CITY OF PAWTUCKET
0003	000	1	AIKEN	ST	8	Overhead	Distribution	Luminaire	LUM HPS RWY 70W	Active	70	90435-67003	S14	CITY OF PAWTUCKET
0004	000	1	AIKEN	ST	8	Overhead	Distribution	Luminaire	LUM HPS RWY 70W	Active	70	90435-67003	S14	CITY OF PAWTUCKET
0001	001	1	ALBERT	ST	9	Overhead	Distribution	Luminaire	LUM HPS RWY 70W	Active	70	90435-67003	S14	CITY OF PAWTUCKET
0002	000	1	ALBERT	ST	9	Overhead	Distribution	Luminaire	LUM HPS RWY 70W	Active	70	90435-67003	S14	CITY OF PAWTUCKET
0002	000	1	ALDEN	ST	10	Overhead	Distribution	Luminaire	LUM HPS RWY 70W	Active	70	90435-67003	S14	CITY OF PAWTUCKET
0004	000	1	ALDEN	ST	10	Overhead	Distribution	Luminaire	LUM HPS RWY 70W	Active	70	90435-67003	S14	CITY OF PAWTUCKET
0006	000	1	ALDEN	ST	10	Overhead	Distribution	Luminaire	LUM HPS RWY 70W	Active	70	90435-67003	S14	CITY OF PAWTUCKET
0008	000	1	ALDEN	ST	10	Overhead	Distribution	Luminaire	LUM HPS RWY 70W	Active	70	90435-67003	S14	CITY OF PAWTUCKET
0002	000	1	ALEX MC GREGO	RD	11	Overhead	Distribution	Luminaire	LUM HPS RWY 70W	Active	70	90435-67003	S14	CITY OF PAWTUCKET
0004	000	1	ALEX MC GREGO	RD	11	Overhead	Distribution	Luminaire	LUM HPS RWY 70W	Active	70	90435-67003	S14	CITY OF PAWTUCKET
0006	000	1	ALEX MC GREGO	RD	11	Overhead	Distribution	Luminaire	LUM HPS RWY 70W	Active	70	90435-67003	S14	CITY OF PAWTUCKET
0007	000	1	ALEX MC GREGO	RD	11	Overhead	Distribution	Luminaire	LUM HPS RWY 70W	Active	70	90435-67003	S14	CITY OF PAWTUCKET
0008	000	1	ALEX MC GREGO	RD	11	Overhead	Distribution	Luminaire	LUM HPS RWY 70W	Active	70	90435-67003	S14	CITY OF PAWTUCKET
0010	000	1	ALEX MC GREGO	RD	11	Overhead	Distribution	Luminaire	LUM HPS RWY 70W	Active	70	90435-67003	S14	CITY OF PAWTUCKET
0012	000	1	ALEX MC GREGO	RD	11	Overhead	Distribution	Luminaire	LUM HPS RWY 70W	Active	70	90435-67003	S14	CITY OF PAWTUCKET
0014	000	1	ALEX MC GREGO	RD	11	Overhead	Distribution	Luminaire	LUM HPS RWY 70W	Active	70	90435-67003	S14	CITY OF PAWTUCKET
0015	000	1	ALEX MC GREGO	RD	11	Overhead	Distribution	Luminaire	LUM HPS RWY 100W	Active	100	90435-67003	S14	CITY OF PAWTUCKET
0017	000	1	ALEX MC GREGO	RD	11	Overhead	Distribution	Luminaire	LUM HPS RWY 70W	Active	70	90435-67003	S14	CITY OF PAWTUCKET
0018	000	1	ALEX MC GREGO	RD	11	Overhead	Distribution	Luminaire	LUM HPS RWY 70W	Active	70	90435-67003	S14	CITY OF PAWTUCKET
0019	000	1	ALEX MC GREGO	RD	11	Overhead	Distribution	Luminaire	LUM HPS RWY 70W	Active	70	90435-67003	S14	CITY OF PAWTUCKET
0021	000	1	ALEX MC GREGO	RD	11	Overhead	Distribution	Luminaire	LUM HPS RWY 70W	Active	70	90435-67003	S14	CITY OF PAWTUCKET
0022	000	1	ALEX MC GREGO	RD	11	Overhead	Distribution	Luminaire	LUM HPS RWY 70W	Active	70	90435-67003	S14	CITY OF PAWTUCKET
0023	000	1	ALEX MC GREGO	RD	11	Overhead	Distribution	Luminaire	LUM HPS RWY 70W	Active	70	90435-67003	S14	CITY OF PAWTUCKET
0024	000	1	ALEX MC GREGO	RD	11	Overhead	Distribution	Luminaire	LUM HPS RWY 70W	Active	70	90435-67003	S14	CITY OF PAWTUCKET
0026	000	1	ALEX MC GREGO	RD	11	Overhead	Distribution	Luminaire	LUM HPS RWY 70W	Active	70	90435-67003	S14	CITY OF PAWTUCKET
0003	000	1	ALFA	DR	17	Overhead	Distribution	Luminaire	LUM HPS RWY 70W	Active	70	90435-67003	S14	CITY OF PAWTUCKET
0005	000	1	ALFA	DR	17	Overhead	Distribution	Luminaire	LUM HPS RWY 70W	Active	70	90435-67003	S14	CITY OF PAWTUCKET
0007	000	1	ALFA	DR	17	Overhead	Distribution	Luminaire	LUM HPS RWY 70W	Active	70	90435-67003	S14	CITY OF PAWTUCKET
0009	000	1	ALFA	DR	17	Overhead	Distribution	Luminaire	LUM HPS RWY 70W	Active	70	90435-67003	S14	CITY OF PAWTUCKET
0011	000	1	ALFA	DR	17	Overhead	Distribution	Luminaire	LUM HPS RWY 70W	Active	70	90435-67003	S14	CITY OF PAWTUCKET
0002	000	1	ALFRED	ST	12	Overhead	Distribution	Luminaire	LUM HPS RWY 70W	Active	70	90435-67003	S14	CITY OF PAWTUCKET
0001	000	1	ALFRED STONE	RD	13	Overhead	Distribution	Luminaire	LUM HPS RWY 70W	Active	70	90435-67003	S14	CITY OF PAWTUCKET
0002	000	1	ALFRED STONE	RD	13	Overhead	Distribution	Luminaire	LUM HPS RWY 70W	Active	70	90435-67003	S14	CITY OF PAWTUCKET
0003	000	1	ALFRED STONE	RD	13	Overhead	Distribution	Luminaire	LUM HPS RWY 70W	Active	70	90435-67003	S14	CITY OF PAWTUCKET
0004	000	1	ALFRED STONE	RD	13	Overhead	Distribution	Luminaire	LUM HPS RWY 70W	Active	70	90435-67003	S14	CITY OF PAWTUCKET
0006	000	1	ALFRED STONE	RD	13	Overhead	Distribution	Luminaire	LUM HPS RWY 70W	Active	70	90435-67003	S14	CITY OF PAWTUCKET
0007	000	1	ALFRED STONE	RD	13	Overhead	Distribution	Luminaire	LUM HPS RWY 50W	Active	50	90435-67003	S14	CITY OF PAWTUCKET
0008	000	1	ALFRED STONE	RD	13	Overhead	Distribution	Luminaire	LUM HPS RWY 70W	Active	70	90435-67003	S14	CITY OF PAWTUCKET
0001	000	1	ALICE	ST	14	Overhead	Distribution	Luminaire	LUM HPS RWY 70W	Active	70	90435-67003	S14	CITY OF PAWTUCKET

0002	000	1	ALICE	ST	14	Overhead	Distribution	Luminaire	LUM HPS RWY 70W	Active	70	90435-67003	S14	CITY OF PAWTUCKET
0001	000	1	ALLEN	AVE	15	Overhead	Distribution	Luminaire	LUM HPS RWY 250W	Active	250	90435-67003	S14	CITY OF PAWTUCKET
0002	000	1	ALLEN	AVE	15	Overhead	Distribution	Luminaire	LUM HPS RWY 70W	Active	70	90435-67003	S14	CITY OF PAWTUCKET
0004	000	1	ALLEN	AVE	15	Overhead	Distribution	Luminaire	LUM HPS RWY 70W	Active	70	90435-67003	S14	CITY OF PAWTUCKET
0005	000	1	ALLEN	AVE	15	Overhead	Distribution	Luminaire	LUM HPS RWY 70W	Active	70	90435-67003	S14	CITY OF PAWTUCKET
0006	000	1	ALLEN	AVE	15	Overhead	Distribution	Luminaire	LUM HPS RWY 70W	Active	70	90435-67003	S14	CITY OF PAWTUCKET
0008	000	1	ALLEN	AVE	15	Overhead	Distribution	Luminaire	LUM HPS RWY 70W	Active	70	90435-67003	S14	CITY OF PAWTUCKET
0001	000	1	ALMY	ST	16	Overhead	Distribution	Luminaire	LUM HPS RWY 70W	Active	70	90435-67003	S14	CITY OF PAWTUCKET
0002	000	1	AMES	ST	18	Overhead	Distribution	Luminaire	LUM HPS RWY 70W	Active	70	90435-67003	S14	CITY OF PAWTUCKET
0003	000	1	AMES	ST	18	Overhead	Distribution	Luminaire	LUM HPS RWY 70W	Active	70	90435-67003	S14	CITY OF PAWTUCKET
0006	000	1	AMES	ST	18	Overhead	Distribution	Luminaire	LUM HPS RWY 70W	Active	70	90435-67003	S14	CITY OF PAWTUCKET
0007	000	1	AMES	ST	18	Overhead	Distribution	Luminaire	LUM HPS RWY 70W	Active	70	90435-67003	S14	CITY OF PAWTUCKET
0009	000	1	AMES	ST	18	Overhead	Distribution	Luminaire	LUM HPS RWY 70W	Active	70	90435-67003	S14	CITY OF PAWTUCKET
0011	000	1	AMES	ST	18	Overhead	Distribution	Luminaire	LUM HPS RWY 70W	Active	70	90435-67003	S14	CITY OF PAWTUCKET
0003	000	1	AMEY	ST	19	Overhead	Distribution	Luminaire	LUM HPS RWY 70W	Active	70	90435-67003	S14	CITY OF PAWTUCKET
0004	001	1	AMEY	ST	19	Overhead	Distribution	Luminaire	LUM HPS RWY 70W	Active	70	90435-67003	S14	CITY OF PAWTUCKET
0007	000	1	AMEY	ST	19	Overhead	Distribution	Luminaire	LUM HPS RWY 70W	Active	70	90435-67003	S14	CITY OF PAWTUCKET
0009	000	1	AMEY	ST	19	Overhead	Distribution	Luminaire	LUM HPS RWY 100W	Active	100	90435-67003	S14	CITY OF PAWTUCKET
0002	000	1	AMHERST	AVE	20	Overhead	Distribution	Luminaire	LUM HPS RWY 70W	Active	70	90435-67003	S14	CITY OF PAWTUCKET
0004	000	1	AMHERST	AVE	20	Overhead	Distribution	Luminaire	LUM HPS RWY 70W	Active	70	90435-67003	S14	CITY OF PAWTUCKET
0005	000	1	AMHERST	AVE	20	Overhead	Distribution	Luminaire	LUM HPS RWY 70W	Active	70	90435-67003	S14	CITY OF PAWTUCKET
0008	000	1	AMHERST	AVE	20	Overhead	Distribution	Luminaire	LUM HPS RWY 70W	Active	70	90435-67003	S14	CITY OF PAWTUCKET
0010	000	1	AMHERST	AVE	20	Overhead	Distribution	Luminaire	LUM HPS RWY 70W	Active	70	90435-67003	S14	CITY OF PAWTUCKET
0011	000	1	AMHERST	AVE	20	Overhead	Distribution	Luminaire	LUM HPS RWY 70W	Active	70	90435-67003	S14	CITY OF PAWTUCKET
0013	000	1	AMHERST	AVE	20	Overhead	Distribution	Luminaire	LUM HPS RWY 70W	Active	70	90435-67003	S14	CITY OF PAWTUCKET
0002	001	1	ANAWAN	RD	21	Overhead	Distribution	Luminaire	LUM HPS RWY 70W	Active	70	90435-67003	S14	CITY OF PAWTUCKET
0004	000	1	ANAWAN	RD	21	Overhead	Distribution	Luminaire	LUM HPS RWY 70W	Active	70	90435-67003	S14	CITY OF PAWTUCKET
0006	000	1	ANAWAN	RD	21	Overhead	Distribution	Luminaire	LUM HPS RWY 70W	Active	70	90435-67003	S14	CITY OF PAWTUCKET
0008	000	1	ANAWAN	RD	21	Overhead	Distribution	Luminaire	LUM HPS RWY 50W	Active	50	90435-67003	S14	CITY OF PAWTUCKET
0009	000	1	ANAWAN	RD	21	Overhead	Distribution	Luminaire	LUM HPS RWY 70W	Active	70	90435-67003	S14	CITY OF PAWTUCKET
0011	000	1	ANAWAN	RD	21	Overhead	Distribution	Luminaire	LUM HPS RWY 70W	Active	70	90435-67003	S14	CITY OF PAWTUCKET
0004	000	1	ANDERTON	AVE	22	Overhead	Distribution	Luminaire	LUM HPS RWY 70W	Active	70	90435-67003	S14	CITY OF PAWTUCKET
0005	000	1	ANDERTON	AVE	22	Overhead	Distribution	Luminaire	LUM HPS RWY 50W	Active	50	90435-67003	S14	CITY OF PAWTUCKET
0009	000	1	ANDERTON	AVE	22	Overhead	Distribution	Luminaire	LUM HPS RWY 70W	Active	70	90435-67003	S14	CITY OF PAWTUCKET
0011	000	1	ANDERTON	AVE	22	Overhead	Distribution	Luminaire	LUM HPS RWY 70W	Active	70	90435-67003	S14	CITY OF PAWTUCKET
0002	000	1	ANDREW FERLAN	WAY	56	Overhead	Distribution	Luminaire	LUM HPS RWY 250W	Active	250	90435-67003	S14	CITY OF PAWTUCKET
0003	000	1	ANDREW FERLAN	WAY	56	Overhead	Distribution	Luminaire	LUM HPS RWY 250W	Active	250	90435-67003	S14	CITY OF PAWTUCKET
0001	000	1	ANGLE	ST	23	Overhead	Distribution	Luminaire	LUM HPS RWY 70W	Active	70	90435-67003	S14	CITY OF PAWTUCKET
0002	000	1	ANGLE	ST	23	Overhead	Distribution	Luminaire	LUM HPS RWY 70W	Active	70	90435-67003	S14	CITY OF PAWTUCKET
0003	000	1	ANGLE	ST	23	Overhead	Distribution	Luminaire	LUM HPS RWY 70W	Active	70	90435-67003	S14	CITY OF PAWTUCKET
0002	000	1	ANNETTE	AVE	24	Overhead	Distribution	Luminaire	LUM HPS RWY 70W	Active	70	90435-67003	S14	CITY OF PAWTUCKET
0003	000	1	ANNIE	ST	25	Overhead	Distribution	Luminaire	LUM HPS RWY 70W	Active	70	90435-67003	S14	CITY OF PAWTUCKET
0005	000	1	ANNIE	ST	25	Overhead	Distribution	Luminaire	LUM HPS RWY 70W	Active	70	90435-67003	S14	CITY OF PAWTUCKET
0007	000	1	ANNIE	ST	25	Overhead	Distribution	Luminaire	LUM HPS RWY 70W	Active	70	90435-67003	S14	CITY OF PAWTUCKET
0020	000	1	ANNIE	ST	25	Overhead	Distribution	Luminaire	LUM HPS RWY 100W	Active	100	90435-67003	S14	CITY OF PAWTUCKET
0022	000	1	ANNIE	ST	25	Overhead	Distribution	Luminaire	LUM HPS RWY 70W	Active	70	90435-67003	S14	CITY OF PAWTUCKET
0003	000	1	ANTHONY	AVE	26	Overhead	Distribution	Luminaire	LUM HPS RWY 70W	Active	70	90435-67003	S14	CITY OF PAWTUCKET
0008	000	1	ANTHONY	AVE	26	Overhead	Distribution	Luminaire	LUM HPS RWY 70W	Active	70	90435-67003	S14	CITY OF PAWTUCKET
0010	000	1	ANTHONY	AVE	26	Overhead	Distribution	Luminaire	LUM HPS RWY 70W	Active	70	90435-67003	S14	CITY OF PAWTUCKET
0012	000	1	ANTHONY	AVE	26	Overhead	Distribution	Luminaire	LUM HPS RWY 70W	Active	70	90435-67003	S14	CITY OF PAWTUCKET
0014	000	1	ANTHONY	AVE	26	Overhead	Distribution	Luminaire	LUM HPS RWY 70W	Active	70	90435-67003	S14	CITY OF PAWTUCKET
0015	000	1	ANTHONY	AVE	26	Overhead	Distribution	Luminaire	LUM HPS RWY 70W	Active	70	90435-67003	S14	CITY OF PAWTUCKET
0017	000	1	ANTHONY	AVE	26	Overhead	Distribution	Luminaire	LUM HPS RWY 70W	Active	70	90435-67003	S14	CITY OF PAWTUCKET
0001	000	1	APPLETON	AVE	27	Overhead	Distribution	Luminaire	LUM HPS RWY 70W	Active	70	90435-67003	S14	CITY OF PAWTUCKET
0003	000	1	APPLETON	AVE	27	Overhead	Distribution	Luminaire	LUM HPS RWY 70W	Active	70	90435-67003	S14	CITY OF PAWTUCKET
0005	000	1	APPLETON	AVE	27	Overhead	Distribution	Luminaire	LUM HPS RWY 70W	Active	70	90435-67003	S14	CITY OF PAWTUCKET
0006	000	1	APPLETON	AVE	27	Overhead	Distribution	Luminaire	LUM HPS RWY 70W	Active	70	90435-67003	S14	CITY OF PAWTUCKET
0007	000	1	APPLETON	AVE	27	Overhead	Distribution	Luminaire	LUM HPS RWY 70W	Active	70	90435-67003	S14	CITY OF PAWTUCKET
0008	000	1	APPLETON	AVE	27	Overhead	Distribution	Luminaire	LUM HPS RWY 70W	Active	70	90435-67003	S14	CITY OF PAWTUCKET
0009	000	1	APPLETON	AVE	27	Overhead	Distribution	Luminaire	LUM HPS RWY 70W	Active	70	90435-67003	S14	CITY OF PAWTUCKET
0011	000	1	APPLETON	AVE	27	Overhead	Distribution	Luminaire	LUM HPS RWY 70W	Active	70	90435-67003	S14	CITY OF PAWTUCKET
0012	000	1	APPLETON	AVE	27	Overhead	Distribution	Luminaire	LUM HPS RWY 70W	Active	70	90435-67003	S14	CITY OF PAWTUCKET
0013	000	1	APPLETON	AVE	27	Overhead	Distribution	Luminaire	LUM HPS RWY 70W	Active	70	90435-67003	S14	CITY OF PAWTUCKET

0014	000	1	APPLETON	AVE	27	Overhead	Distribution	Luminaire	LUM HPS RWY 70W	Active	70	90435-67003	S14	CITY OF PAWTUCKET
0002	000	1	ARCH	ST	28	Overhead	Distribution	Luminaire	LUM HPS RWY 70W	Active	70	90435-67003	S14	CITY OF PAWTUCKET
0003	000	1	ARCH	ST	28	Overhead	Distribution	Luminaire	LUM HPS RWY 70W	Active	70	90435-67003	S14	CITY OF PAWTUCKET
0004	000	1	ARCH	ST	28	Overhead	Distribution	Luminaire	LUM HPS RWY 70W	Active	70	90435-67003	S14	CITY OF PAWTUCKET
0006	000	1	ARCH	ST	28	Overhead	Distribution	Luminaire	LUM HPS RWY 70W	Active	70	90435-67003	S14	CITY OF PAWTUCKET
0008	000	1	ARCH	ST	28	Overhead	Distribution	Luminaire	LUM HPS RWY 70W	Active	70	90435-67003	S14	CITY OF PAWTUCKET
0009	000	1	ARCH	ST	28	Overhead	Distribution	Luminaire	LUM HPS RWY 70W	Active	70	90435-67003	S14	CITY OF PAWTUCKET
0011	000	1	ARCH	ST	28	Overhead	Distribution	Luminaire	LUM HPS RWY 70W	Active	70	90435-67003	S14	CITY OF PAWTUCKET
0013	000	1	ARCH	ST	28	Overhead	Distribution	Luminaire	LUM HPS RWY 70W	Active	70	90435-67003	S14	CITY OF PAWTUCKET
0014	000	1	ARCH	ST	28	Overhead	Distribution	Luminaire	LUM HPS RWY 70W	Active	70	90435-67003	S14	CITY OF PAWTUCKET
0001	000	1	ARCHER	ST	29	Overhead	Distribution	Luminaire	LUM HPS RWY 70W	Active	70	90435-67003	S14	CITY OF PAWTUCKET
0003	000	1	ARCHER	ST	29	Overhead	Distribution	Luminaire	LUM HPS RWY 70W	Active	70	90435-67003	S14	CITY OF PAWTUCKET
0005	000	1	ARCHER	ST	29	Overhead	Distribution	Luminaire	LUM HPS RWY 70W	Active	70	90435-67003	S14	CITY OF PAWTUCKET
0007	000	1	ARCHER	ST	29	Overhead	Distribution	Luminaire	LUM HPS RWY 70W	Active	70	90435-67003	S14	CITY OF PAWTUCKET
0009	000	1	ARCHER	ST	29	Overhead	Distribution	Luminaire	LUM HPS RWY 70W	Active	70	90435-67003	S14	CITY OF PAWTUCKET
0011	000	1	ARCHER	ST	29	Overhead	Distribution	Luminaire	LUM HPS RWY 70W	Active	70	90435-67003	S14	CITY OF PAWTUCKET
0012	000	1	ARCHER	ST	29	Overhead	Distribution	Luminaire	LUM HPS RWY 100W	Active	100	90435-67003	S14	CITY OF PAWTUCKET
0001	000	1	ARGOL	ST	30	Overhead	Distribution	Luminaire	LUM HPS RWY 70W	Active	70	90435-67003	S14	CITY OF PAWTUCKET
0003	000	1	ARGOL	ST	30	Overhead	Distribution	Luminaire	LUM HPS RWY 70W	Active	70	90435-67003	S14	CITY OF PAWTUCKET
0005	001	1	ARGOL	ST	30	Overhead	Distribution	Luminaire	LUM HPS RWY 70W	Active	70	90435-67003	S14	CITY OF PAWTUCKET
0008	000	1	ARGOL	ST	30	Overhead	Distribution	Luminaire	LUM HPS RWY 70W	Active	70	90435-67003	S14	CITY OF PAWTUCKET
0002	000	1	ARLAND	DR	31	Overhead	Distribution	Luminaire	LUM HPS RWY 100W	Active	100	90435-67003	S14	CITY OF PAWTUCKET
0004	000	1	ARLAND	DR	31	Overhead	Distribution	Luminaire	LUM HPS RWY 100W	Active	100	90435-67003	S14	CITY OF PAWTUCKET
0006	000	1	ARLAND	DR	31	Overhead	Distribution	Luminaire	LUM HPS RWY 100W	Active	100	90435-67003	S14	CITY OF PAWTUCKET
0008	000	1	ARLAND	DR	31	Overhead	Distribution	Luminaire	LUM HPS RWY 100W	Active	100	90435-67003	S14	CITY OF PAWTUCKET
0008	001	1	ARLAND	DR	31	Overhead	Distribution	Luminaire	LUM HPS RWY 100W	Active	100	90435-67003	S14	CITY OF PAWTUCKET
0009	000	1	ARLAND	DR	31	Overhead	Distribution	Luminaire	LUM HPS RWY 100W	Active	100	90435-67003	S14	CITY OF PAWTUCKET
0011	000	1	ARLAND	DR	31	Overhead	Distribution	Luminaire	LUM HPS RWY 100W	Active	100	90435-67003	S14	CITY OF PAWTUCKET
0013	000	1	ARLAND	DR	31	Overhead	Distribution	Luminaire	LUM HPS RWY 100W	Active	100	90435-67003	S14	CITY OF PAWTUCKET
0003	000	1	ARLINGTON	ST	32	Overhead	Distribution	Luminaire	LUM HPS RWY 70W	Active	70	90435-67003	S14	CITY OF PAWTUCKET
0004	000	1	ARLINGTON	ST	32	Overhead	Distribution	Luminaire	LUM HPS RWY 100W	Active	100	90435-67003	S14	CITY OF PAWTUCKET
0005	000	1	ARLINGTON	ST	32	Overhead	Distribution	Luminaire	LUM HPS RWY 70W	Active	70	90435-67003	S14	CITY OF PAWTUCKET
0001	000	1	ARMISTICE	BLVD	33	Overhead	Distribution	Luminaire	LUM HPS RWY 100W	Active	100	90435-67003	S14	CITY OF PAWTUCKET
0015	000	1	ARMISTICE	BLVD	33	Overhead	Distribution	Luminaire	LUM HPS RWY 250W	Active	250	90435-67003	S14	CITY OF PAWTUCKET
0019	000	1	ARMISTICE	BLVD	33	Overhead	Distribution	Luminaire	LUM HPS RWY 250W	Active	250	90435-67003	S14	CITY OF PAWTUCKET
0021	000	1	ARMISTICE	BLVD	33	Overhead	Distribution	Luminaire	LUM HPS RWY 250W	Active	250	90435-67003	S14	CITY OF PAWTUCKET
0023	000	1	ARMISTICE	BLVD	33	Overhead	Distribution	Luminaire	LUM HPS RWY 250W	Active	250	90435-67003	S14	CITY OF PAWTUCKET
0025	000	1	ARMISTICE	BLVD	33	Overhead	Distribution	Luminaire	LUM HPS RWY 250W	Active	250	90435-67003	S14	CITY OF PAWTUCKET
0027	000	1	ARMISTICE	BLVD	33	Overhead	Distribution	Luminaire	LUM HPS RWY 250W	Active	250	90435-67003	S14	CITY OF PAWTUCKET
0029	000	1	ARMISTICE	BLVD	33	Overhead	Distribution	Luminaire	LUM HPS RWY 250W	Active	250	90435-67003	S14	CITY OF PAWTUCKET
0031	000	1	ARMISTICE	BLVD	33	Overhead	Distribution	Luminaire	LUM HPS RWY 250W	Active	250	90435-67003	S14	CITY OF PAWTUCKET
0033	001	1	ARMISTICE	BLVD	33	Overhead	Distribution	Luminaire	LUM HPS RWY 250W	Active	250	90435-67003	S14	CITY OF PAWTUCKET
0035	000	1	ARMISTICE	BLVD	33	Overhead	Distribution	Luminaire	LUM HPS RWY 250W	Active	250	90435-67003	S14	CITY OF PAWTUCKET
0036	001	1	ARMISTICE	BLVD	33	Overhead	Distribution	Luminaire	LUM HPS RWY 250W	Active	250	90435-67003	S14	CITY OF PAWTUCKET
0038	001	1	ARMISTICE	BLVD	33	Overhead	Distribution	Luminaire	LUM HPS FLD 250W	Active	250	90435-67003	S14	CITY OF PAWTUCKET
0038	001	3	ARMISTICE	BLVD	33	Overhead	Distribution	Luminaire	LUM HPS FLD 400W	Active	400	90435-67003	S14	CITY OF PAWTUCKET
0039	031	1	ARMISTICE	BLVD	33	Overhead	Distribution	Luminaire	LUM HPS FLD 400W	Active	400	90435-67003	S14	CITY OF PAWTUCKET
0039	032	1	ARMISTICE	BLVD	33	Overhead	Distribution	Luminaire	LUM HPS FLD 250W	Active	250	90435-67003	S14	CITY OF PAWTUCKET
0039	033	1	ARMISTICE	BLVD	33	Overhead	Distribution	Luminaire	LUM HPS FLD 250W	Active	250	90435-67003	S14	CITY OF PAWTUCKET
0039	033	2	ARMISTICE	BLVD	33	Overhead	Distribution	Luminaire	LUM HPS FLD 250W	Active	250	90435-67003	S14	CITY OF PAWTUCKET
0039	035	1	ARMISTICE	BLVD	33	Overhead	Distribution	Luminaire	LUM HPS FLD 400W	Active	400	90435-67003	S14	CITY OF PAWTUCKET
0039	041	1	ARMISTICE	BLVD	33	Overhead	Distribution	Luminaire	LUM HPS FLD 400W	Active	400	90435-67003	S14	CITY OF PAWTUCKET
0039	043	1	ARMISTICE	BLVD	33	Overhead	Distribution	Luminaire	LUM HPS FLD 250W	Active	250	90435-67003	S14	CITY OF PAWTUCKET
0039	043	2	ARMISTICE	BLVD	33	Overhead	Distribution	Luminaire	LUM HPS FLD 250W	Active	250	90435-67003	S14	CITY OF PAWTUCKET
0039	044	1	ARMISTICE	BLVD	33	Overhead	Distribution	Luminaire	LUM HPS FLD 400W	Active	400	15698-25002	S14	PAWTUCKET SCHOOL DEP
0039	044	2	ARMISTICE	BLVD	33	Overhead	Distribution	Luminaire	LUM HPS FLD 400W	Active	400	15698-25002	S14	PAWTUCKET SCHOOL DEP
0040	000	1	ARMISTICE	BLVD	33	Overhead	Distribution	Luminaire	LUM HPS RWY 250W	Active	250	90435-67003	S14	CITY OF PAWTUCKET
0040	030	1	ARMISTICE	BLVD	33	Overhead	Distribution	Luminaire	LUM HPS FLD 400W	Active	400	90435-67003	S14	CITY OF PAWTUCKET
0040	030	2	ARMISTICE	BLVD	33	Overhead	Distribution	Luminaire	LUM HPS FLD 400W	Active	400	90435-67003	S14	CITY OF PAWTUCKET
0041	000	1	ARMISTICE	BLVD	33	Overhead	Distribution	Luminaire	LUM HPS RWY 250W	Active	250	90435-67003	S14	CITY OF PAWTUCKET
0041	084	1	ARMISTICE	BLVD	33	Overhead	Distribution	Luminaire	LUM HPS RWY 250W	Active	250	90435-67003	S14	CITY OF PAWTUCKET
0043	000	1	ARMISTICE	BLVD	33	Overhead	Distribution	Luminaire	LUM HPS RWY 70W	Active	70	90435-67003	S14	CITY OF PAWTUCKET
0043	000	2	ARMISTICE	BLVD	33	Overhead	Distribution	Luminaire	LUM HPS RWY 250W	Active	250	90435-67003	S14	CITY OF PAWTUCKET

0044	000	1	ARMISTICE	BLVD	33	Overhead	Distribution	Luminaire	LUM HPS RWY 250W	Active	250	90435-67003	S14	CITY OF PAWTUCKET
0046	000	1	ARMISTICE	BLVD	33	Overhead	Distribution	Luminaire	LUM HPS RWY 250W	Active	250	90435-67003	S14	CITY OF PAWTUCKET
0047	000	1	ARMISTICE	BLVD	33	Overhead	Distribution	Luminaire	LUM HPS RWY 250W	Active	250	90435-67003	S14	CITY OF PAWTUCKET
0048	001	1	ARMISTICE	BLVD	33	Overhead	Distribution	Luminaire	LUM HPS RWY 250W	Active	250	90435-67003	S14	CITY OF PAWTUCKET
0050	000	1	ARMISTICE	BLVD	33	Overhead	Distribution	Luminaire	LUM HPS RWY 250W	Active	250	90435-67003	S14	CITY OF PAWTUCKET
0055	000	1	ARMISTICE	BLVD	33	Overhead	Distribution	Luminaire	LUM HPS RWY 250W	Active	250	90435-67003	S14	CITY OF PAWTUCKET
0055	001	1	ARMISTICE	BLVD	33	Overhead	Distribution	Luminaire	LUM HPS RWY 250W	Active	250	90435-67003	S14	CITY OF PAWTUCKET
0057	000	1	ARMISTICE	BLVD	33	Overhead	Distribution	Luminaire	LUM HPS RWY 250W	Active	250	90435-67003	S14	CITY OF PAWTUCKET
0058	000	1	ARMISTICE	BLVD	33	Overhead	Distribution	Luminaire	LUM HPS RWY 250W	Active	250	90435-67003	S14	CITY OF PAWTUCKET
0058	002	1	ARMISTICE	BLVD	33	Overhead	Distribution	Luminaire	LUM HPS RWY 250W	Active	250	90435-67003	S14	CITY OF PAWTUCKET
0059	000	1	ARMISTICE	BLVD	33	Overhead	Distribution	Luminaire	LUM HPS RWY 250W	Active	250	90435-67003	S14	CITY OF PAWTUCKET
0060	000	1	ARMISTICE	BLVD	33	Overhead	Distribution	Luminaire	LUM HPS RWY 250W	Active	250	90435-67003	S14	CITY OF PAWTUCKET
0061	002	1	ARMISTICE	BLVD	33	Overhead	Distribution	Luminaire	LUM HPS RWY 250W	Active	250	90435-67003	S14	CITY OF PAWTUCKET
0062	000	1	ARMISTICE	BLVD	33	Overhead	Distribution	Luminaire	LUM HPS RWY 250W	Active	250	90435-67003	S14	CITY OF PAWTUCKET
0063	000	1	ARMISTICE	BLVD	33	Overhead	Distribution	Luminaire	LUM HPS RWY 250W	Active	250	90435-67003	S14	CITY OF PAWTUCKET
0064	000	1	ARMISTICE	BLVD	33	Overhead	Distribution	Luminaire	LUM HPS RWY 250W	Active	250	90435-67003	S14	CITY OF PAWTUCKET
0067	000	1	ARMISTICE	BLVD	33	Overhead	Distribution	Luminaire	LUM HPS RWY 250W	Active	250	90435-67003	S14	CITY OF PAWTUCKET
0069	000	1	ARMISTICE	BLVD	33	Overhead	Distribution	Luminaire	LUM HPS RWY 250W	Active	250	90435-67003	S14	CITY OF PAWTUCKET
0071	000	1	ARMISTICE	BLVD	33	Overhead	Distribution	Luminaire	LUM HPS RWY 250W	Active	250	90435-67003	S14	CITY OF PAWTUCKET
0073	000	1	ARMISTICE	BLVD	33	Overhead	Distribution	Luminaire	LUM HPS RWY 250W	Active	250	90435-67003	S14	CITY OF PAWTUCKET
0075	000	1	ARMISTICE	BLVD	33	Overhead	Distribution	Luminaire	LUM HPS RWY 250W	Active	250	90435-67003	S14	CITY OF PAWTUCKET
0077	001	1	ARMISTICE	BLVD	33	Overhead	Distribution	Luminaire	LUM HPS RWY 250W	Active	250	90435-67003	S14	CITY OF PAWTUCKET
0078	000	1	ARMISTICE	BLVD	33	Overhead	Distribution	Luminaire	LUM HPS RWY 250W	Active	250	90435-67003	S14	CITY OF PAWTUCKET
0081	000	1	ARMISTICE	BLVD	33	Overhead	Distribution	Luminaire	LUM HPS RWY 250W	Active	250	90435-67003	S14	CITY OF PAWTUCKET
0083	001	1	ARMISTICE	BLVD	33	Overhead	Distribution	Luminaire	LUM HPS RWY 250W	Active	250	90435-67003	S14	CITY OF PAWTUCKET
0085	000	1	ARMISTICE	BLVD	33	Overhead	Distribution	Luminaire	LUM HPS RWY 250W	Active	250	90435-67003	S14	CITY OF PAWTUCKET
0087	000	1	ARMISTICE	BLVD	33	Overhead	Distribution	Luminaire	LUM HPS RWY 250W	Active	250	90435-67003	S14	CITY OF PAWTUCKET
0091	001	1	ARMISTICE	BLVD	33	Overhead	Distribution	Luminaire	LUM HPS RWY 250W	Active	250	90435-67003	S14	CITY OF PAWTUCKET
0094	000	1	ARMISTICE	BLVD	33	Overhead	Distribution	Luminaire	LUM HPS RWY 250W	Active	250	90435-67003	S14	CITY OF PAWTUCKET
0096	000	1	ARMISTICE	BLVD	33	Overhead	Distribution	Luminaire	LUM HPS RWY 250W	Active	250	90435-67003	S14	CITY OF PAWTUCKET
0098	000	1	ARMISTICE	BLVD	33	Overhead	Distribution	Luminaire	LUM HPS RWY 250W	Active	250	90435-67003	S14	CITY OF PAWTUCKET
0100	000	1	ARMISTICE	BLVD	33	Overhead	Distribution	Luminaire	LUM HPS RWY 250W	Active	250	90435-67003	S14	CITY OF PAWTUCKET
0103	000	1	ARMISTICE	BLVD	33	Overhead	Distribution	Luminaire	LUM HPS RWY 250W	Active	250	90435-67003	S14	CITY OF PAWTUCKET
0105	000	1	ARMISTICE	BLVD	33	Overhead	Distribution	Luminaire	LUM HPS RWY 250W	Active	250	90435-67003	S14	CITY OF PAWTUCKET
0107	000	1	ARMISTICE	BLVD	33	Overhead	Distribution	Luminaire	LUM HPS RWY 250W	Active	250	90435-67003	S14	CITY OF PAWTUCKET
0109	001	1	ARMISTICE	BLVD	33	Overhead	Distribution	Luminaire	LUM HPS RWY 250W	Active	250	90435-67003	S14	CITY OF PAWTUCKET
0112	000	1	ARMISTICE	BLVD	33	Overhead	Distribution	Luminaire	LUM HPS RWY 250W	Active	250	90435-67003	S14	CITY OF PAWTUCKET
0114	000	1	ARMISTICE	BLVD	33	Overhead	Distribution	Luminaire	LUM HPS RWY 250W	Active	250	90435-67003	S14	CITY OF PAWTUCKET
0115	000	1	ARMISTICE	BLVD	33	Overhead	Distribution	Luminaire	LUM HPS RWY 250W	Active	250	90435-67003	S14	CITY OF PAWTUCKET
0117	000	1	ARMISTICE	BLVD	33	Overhead	Distribution	Luminaire	LUM HPS RWY 250W	Active	250	90435-67003	S14	CITY OF PAWTUCKET
0118	000	1	ARMISTICE	BLVD	33	Overhead	Distribution	Luminaire	LUM HPS RWY 250W	Active	250	90435-67003	S14	CITY OF PAWTUCKET
0122	000	1	ARMISTICE	BLVD	33	Overhead	Distribution	Luminaire	LUM HPS RWY 250W	Active	250	90435-67003	S14	CITY OF PAWTUCKET
0123	000	1	ARMISTICE	BLVD	33	Overhead	Distribution	Luminaire	LUM HPS RWY 250W	Active	250	90435-67003	S14	CITY OF PAWTUCKET
0126	000	1	ARMISTICE	BLVD	33	Overhead	Distribution	Luminaire	LUM HPS RWY 250W	Active	250	90435-67003	S14	CITY OF PAWTUCKET
0129	000	1	ARMISTICE	BLVD	33	Overhead	Distribution	Luminaire	LUM HPS RWY 250W	Active	250	90435-67003	S14	CITY OF PAWTUCKET
0130	000	1	ARMISTICE	BLVD	33	Overhead	Distribution	Luminaire	LUM HPS RWY 250W	Active	250	90435-67003	S14	CITY OF PAWTUCKET
0133	000	1	ARMISTICE	BLVD	33	Overhead	Distribution	Luminaire	LUM HPS RWY 250W	Active	250	90435-67003	S14	CITY OF PAWTUCKET
0134	000	1	ARMISTICE	BLVD	33	Overhead	Distribution	Luminaire	LUM HPS RWY 250W	Active	250	90435-67003	S14	CITY OF PAWTUCKET
0134	001	1	ARMISTICE	BLVD	33	Overhead	Distribution	Luminaire	LUM HPS RWY 250W	Active	250	90435-67003	S14	CITY OF PAWTUCKET
0136	000	1	ARMISTICE	BLVD	33	Overhead	Distribution	Luminaire	LUM HPS RWY 250W	Active	250	90435-67003	S14	CITY OF PAWTUCKET
0138	000	1	ARMISTICE	BLVD	33	Overhead	Distribution	Luminaire	LUM HPS RWY 250W	Active	250	90435-67003	S14	CITY OF PAWTUCKET
0139	001	1	ARMISTICE	BLVD	33	Overhead	Distribution	Luminaire	LUM HPS RWY 250W	Active	250	90435-67003	S14	CITY OF PAWTUCKET
0140	000	1	ARMISTICE	BLVD	33	Overhead	Distribution	Luminaire	LUM HPS RWY 250W	Active	250	90435-67003	S14	CITY OF PAWTUCKET
0141	000	1	ARMISTICE	BLVD	33	Overhead	Distribution	Luminaire	LUM HPS RWY 250W	Active	250	90435-67003	S14	CITY OF PAWTUCKET
0142	001	1	ARMISTICE	BLVD	33	Overhead	Distribution	Luminaire	LUM HPS RWY 250W	Active	250	90435-67003	S14	CITY OF PAWTUCKET
0143	000	1	ARMISTICE	BLVD	33	Overhead	Distribution	Luminaire	LUM HPS RWY 250W	Active	250	90435-67003	S14	CITY OF PAWTUCKET
0144	000	1	ARMISTICE	BLVD	33	Overhead	Distribution	Luminaire	LUM HPS RWY 250W	Active	250	90435-67003	S14	CITY OF PAWTUCKET
0145	084	1	ARMISTICE	BLVD	33	Overhead	Distribution	Luminaire	LUM HPS RWY 250W	Active	250	90435-67003	S14	CITY OF PAWTUCKET
0146	000	1	ARMISTICE	BLVD	33	Overhead	Distribution	Luminaire	LUM HPS RWY 250W	Active	250	90435-67003	S14	CITY OF PAWTUCKET
0147	000	1	ARMISTICE	BLVD	33	Overhead	Distribution	Luminaire	LUM HPS RWY 250W	Active	250	90435-67003	S14	CITY OF PAWTUCKET
0148	000	1	ARMISTICE	BLVD	33	Overhead	Distribution	Luminaire	LUM HPS RWY 250W	Active	250	90435-67003	S14	CITY OF PAWTUCKET
0149	001	1	ARMISTICE	BLVD	33	Overhead	Distribution	Luminaire	LUM HPS RWY 250W	Active	250	90435-67003	S14	CITY OF PAWTUCKET
0149	001	2	ARMISTICE	BLVD	33	Overhead	Distribution	Luminaire	LUM HPS FLD 400W	Active	400	3371-64002	S14	CITY OF PAWTUCKET

0152	000	1	ARMISTICE	BLVD	33	Overhead	Distribution	Luminaire	LUM HPS RWY 250W	Active	250	90435-67003	S14	CITY OF PAWTUCKET
0153	000	1	ARMISTICE	BLVD	33	Overhead	Distribution	Luminaire	LUM HPS RWY 250W	Active	250	90435-67003	S14	CITY OF PAWTUCKET
0155	000	1	ARMISTICE	BLVD	33	Overhead	Distribution	Luminaire	LUM HPS RWY 250W	Active	250	90435-67003	S14	CITY OF PAWTUCKET
0157	000	1	ARMISTICE	BLVD	33	Overhead	Distribution	Luminaire	LUM HPS RWY 250W	Active	250	90435-67003	S14	CITY OF PAWTUCKET
0161	000	1	ARMISTICE	BLVD	33	Overhead	Distribution	Luminaire	LUM HPS RWY 250W	Active	250	90435-67003	S14	CITY OF PAWTUCKET
0163	000	1	ARMISTICE	BLVD	33	Overhead	Distribution	Luminaire	LUM HPS RWY 250W	Active	250	90435-67003	S14	CITY OF PAWTUCKET
0165	000	1	ARMISTICE	BLVD	33	Overhead	Distribution	Luminaire	LUM HPS RWY 250W	Active	250	90435-67003	S14	CITY OF PAWTUCKET
0167	000	1	ARMISTICE	BLVD	33	Overhead	Distribution	Luminaire	LUM HPS RWY 250W	Active	250	90435-67003	S14	CITY OF PAWTUCKET
0001	000	1	ARTHUR	ST	34	Overhead	Distribution	Luminaire	LUM HPS RWY 70W	Active	70	90435-67003	S14	CITY OF PAWTUCKET
0003	000	1	ARTHUR	ST	34	Overhead	Distribution	Luminaire	LUM HPS RWY 70W	Active	70	90435-67003	S14	CITY OF PAWTUCKET
0006	000	1	ARTHUR	ST	34	Overhead	Distribution	Luminaire	LUM HPS RWY 70W	Active	70	90435-67003	S14	CITY OF PAWTUCKET
0009	000	1	ARTHUR	ST	34	Overhead	Distribution	Luminaire	LUM HPS RWY 100W	Active	100	90435-67003	S14	CITY OF PAWTUCKET
0002	000	1	ASH	ST	35	Overhead	Distribution	Luminaire	LUM HPS RWY 70W	Active	70	90435-67003	S14	CITY OF PAWTUCKET
0004	000	1	ASH	ST	35	Overhead	Distribution	Luminaire	LUM HPS RWY 70W	Active	70	90435-67003	S14	CITY OF PAWTUCKET
0005	000	1	ASH	ST	35	Overhead	Distribution	Luminaire	LUM HPS RWY 70W	Active	70	90435-67003	S14	CITY OF PAWTUCKET
0006	000	1	ASH	ST	35	Overhead	Distribution	Luminaire	LUM HPS RWY 70W	Active	70	90435-67003	S14	CITY OF PAWTUCKET
0002	000	1	ASHBURNE	ST	36	Overhead	Distribution	Luminaire	LUM HPS RWY 70W	Active	70	90435-67003	S14	CITY OF PAWTUCKET
0004	000	1	ASHBURNE	ST	36	Overhead	Distribution	Luminaire	LUM HPS RWY 70W	Active	70	90435-67003	S14	CITY OF PAWTUCKET
0006	000	1	ASHBURNE	ST	36	Overhead	Distribution	Luminaire	LUM HPS RWY 70W	Active	70	90435-67003	S14	CITY OF PAWTUCKET
0002	000	1	ASHTON	ST	37	Overhead	Distribution	Luminaire	LUM HPS RWY 70W	Active	70	90435-67003	S14	CITY OF PAWTUCKET
0003	000	1	ASHTON	ST	37	Overhead	Distribution	Luminaire	LUM HPS RWY 70W	Active	70	90435-67003	S14	CITY OF PAWTUCKET
0007	000	1	ASHTON	ST	37	Overhead	Distribution	Luminaire	LUM HPS RWY 70W	Active	70	90435-67003	S14	CITY OF PAWTUCKET
0008	000	1	ASHTON	ST	37	Overhead	Distribution	Luminaire	LUM HPS RWY 70W	Active	70	90435-67003	S14	CITY OF PAWTUCKET
0009	000	1	ASHTON	ST	37	Overhead	Distribution	Luminaire	LUM HPS RWY 70W	Active	70	90435-67003	S14	CITY OF PAWTUCKET
0009	030	1	ASHTON	ST	37	Overhead	Distribution	Luminaire	LUM HPS FLD 400W	Active	400	90435-67003	S14	CITY OF PAWTUCKET
0012	000	1	ASHTON	ST	37	Overhead	Distribution	Luminaire	LUM HPS FLD 400W	Active	400	28129-71003	S14	PAWTUCKET SCH DEPT
0013	000	1	ASHTON	ST	37	Overhead	Distribution	Luminaire	LUM HPS FLD 400W	Active	400	40585-11009	S14	PAWTUCKET SCHOOL DEP
0013	000	2	ASHTON	ST	37	Overhead	Distribution	Luminaire	LUM HPS RWY 70W	Active	70	90435-67003	S14	CITY OF PAWTUCKET
0001	000	1	ATWOOD	AVE	38	Overhead	Distribution	Luminaire	LUM HPS RWY 70W	Active	70	90435-67003	S14	CITY OF PAWTUCKET
0003	000	1	ATWOOD	AVE	38	Overhead	Distribution	Luminaire	LUM HPS RWY 70W	Active	70	90435-67003	S14	CITY OF PAWTUCKET
0004	000	1	ATWOOD	AVE	38	Overhead	Distribution	Luminaire	LUM HPS RWY 70W	Active	70	90435-67003	S14	CITY OF PAWTUCKET
0005	000	1	ATWOOD	AVE	38	Overhead	Distribution	Luminaire	LUM HPS RWY 70W	Active	70	90435-67003	S14	CITY OF PAWTUCKET
0006	000	1	ATWOOD	AVE	38	Overhead	Distribution	Luminaire	LUM HPS RWY 70W	Active	70	90435-67003	S14	CITY OF PAWTUCKET
0007	000	1	ATWOOD	AVE	38	Overhead	Distribution	Luminaire	LUM HPS RWY 70W	Active	70	90435-67003	S14	CITY OF PAWTUCKET
0008	000	1	ATWOOD	AVE	38	Overhead	Distribution	Luminaire	LUM HPS RWY 70W	Active	70	90435-67003	S14	CITY OF PAWTUCKET
0010	000	1	ATWOOD	AVE	38	Overhead	Distribution	Luminaire	LUM HPS RWY 70W	Active	70	90435-67003	S14	CITY OF PAWTUCKET
0011	000	1	ATWOOD	AVE	38	Overhead	Distribution	Luminaire	LUM HPS RWY 70W	Active	70	90435-67003	S14	CITY OF PAWTUCKET
0001	000	1	AUBURN	ST	39	Overhead	Distribution	Luminaire	LUM HPS RWY 70W	Active	70	90435-67003	S14	CITY OF PAWTUCKET
0003	000	1	AUBURN	ST	39	Overhead	Distribution	Luminaire	LUM HPS RWY 70W	Active	70	90435-67003	S14	CITY OF PAWTUCKET
0005	000	1	AUBURN	ST	39	Overhead	Distribution	Luminaire	LUM HPS RWY 70W	Active	70	90435-67003	S14	CITY OF PAWTUCKET
0007	000	1	AUBURN	ST	39	Overhead	Distribution	Luminaire	LUM HPS RWY 70W	Active	70	90435-67003	S14	CITY OF PAWTUCKET
0002	000	1	BACON	ST	40	Overhead	Distribution	Luminaire	LUM HPS RWY 70W	Active	70	90435-67003	S14	CITY OF PAWTUCKET
0003	000	1	BACON	ST	40	Overhead	Distribution	Luminaire	LUM HPS RWY 70W	Active	70	90435-67003	S14	CITY OF PAWTUCKET
0005	000	1	BACON	ST	40	Overhead	Distribution	Luminaire	LUM HPS RWY 70W	Active	70	90435-67003	S14	CITY OF PAWTUCKET
0007	000	1	BACON	ST	40	Overhead	Distribution	Luminaire	LUM HPS RWY 70W	Active	70	90435-67003	S14	CITY OF PAWTUCKET
0009	000	1	BACON	ST	40	Overhead	Distribution	Luminaire	LUM HPS RWY 70W	Active	70	90435-67003	S14	CITY OF PAWTUCKET
0011	000	1	BACON	ST	40	Overhead	Distribution	Luminaire	LUM HPS RWY 70W	Active	70	90435-67003	S14	CITY OF PAWTUCKET
0013	000	1	BACON	ST	40	Overhead	Distribution	Luminaire	LUM HPS RWY 70W	Active	70	90435-67003	S14	CITY OF PAWTUCKET
0015	000	1	BACON	ST	40	Overhead	Distribution	Luminaire	LUM HPS RWY 70W	Active	70	90435-67003	S14	CITY OF PAWTUCKET
0001	000	1	BAGLEY	ST	41	Overhead	Distribution	Luminaire	LUM HPS RWY 70W	Active	70	90435-67003	S14	CITY OF PAWTUCKET
0003	000	1	BAGLEY	ST	41	Overhead	Distribution	Luminaire	LUM HPS RWY 70W	Active	70	90435-67003	S14	CITY OF PAWTUCKET
0008	000	1	BAGLEY	ST	41	Overhead	Distribution	Luminaire	LUM HPS RWY 70W	Active	70	90435-67003	S14	CITY OF PAWTUCKET
0002	000	1	BALBO	ST	42	Overhead	Distribution	Luminaire	LUM HPS RWY 70W	Active	70	90435-67003	S14	CITY OF PAWTUCKET
0003	000	1	BALBO	ST	42	Overhead	Distribution	Luminaire	LUM HPS RWY 70W	Active	70	90435-67003	S14	CITY OF PAWTUCKET
0004	000	1	BALBO	ST	42	Overhead	Distribution	Luminaire	LUM HPS RWY 70W	Active	70	90435-67003	S14	CITY OF PAWTUCKET
0002	000	1	BALCH	ST	43	Overhead	Distribution	Luminaire	LUM HPS RWY 70W	Active	70	90435-67003	S14	CITY OF PAWTUCKET
0008	000	1	BALCH	ST	43	Overhead	Distribution	Luminaire	LUM HPS RWY 70W	Active	70	90435-67003	S14	CITY OF PAWTUCKET
0011	000	1	BALCH	ST	43	Overhead	Distribution	Luminaire	LUM HPS RWY 70W	Active	70	90435-67003	S14	CITY OF PAWTUCKET
0014	000	1	BALCH	ST	43	Overhead	Distribution	Luminaire	LUM HPS RWY 70W	Active	70	90435-67003	S14	CITY OF PAWTUCKET
0016	000	1	BALCH	ST	43	Overhead	Distribution	Luminaire	LUM HPS RWY 70W	Active	70	90435-67003	S14	CITY OF PAWTUCKET
0002	000	1	BALDWIN	ST	44	Overhead	Distribution	Luminaire	LUM HPS RWY 70W	Active	70	90435-67003	S14	CITY OF PAWTUCKET
0003	000	1	BALDWIN	ST	44	Overhead	Distribution	Luminaire	LUM HPS RWY 70W	Active	70	90435-67003	S14	CITY OF PAWTUCKET
0004	000	1	BALDWIN	ST	44	Overhead	Distribution	Luminaire	LUM HPS FLD 400W	Active	400	40585-12006	S14	PAWTUCKET SCHOOL DEP

0004	000	2	BALDWIN	ST	44	Overhead	Distribution	Luminaire	LUM HPS RWY 70W	Active	70	90435-67003	S14	CITY OF PAWTUCKET
0005	000	1	BALDWIN	ST	44	Overhead	Distribution	Luminaire	LUM HPS FLD 400W	Active	400	40585-12006	S14	PAWTUCKET SCHOOL DEP
0006	000	1	BALDWIN	ST	44	Overhead	Distribution	Luminaire	LUM HPS FLD 250W	Active	250	40585-12006	S14	PAWTUCKET SCHOOL DEP
0006	000	2	BALDWIN	ST	44	Overhead	Distribution	Luminaire	LUM HPS RWY 70W	Active	70	90435-67003	S14	CITY OF PAWTUCKET
0008	000	1	BALDWIN	ST	44	Overhead	Distribution	Luminaire	LUM HPS FLD 250W	Active	250	40585-12006	S14	PAWTUCKET SCHOOL DEP
0008	000	2	BALDWIN	ST	44	Overhead	Distribution	Luminaire	LUM HPS RWY 70W	Active	70	90435-67003	S14	CITY OF PAWTUCKET
0010	000	1	BALDWIN	ST	44	Overhead	Distribution	Luminaire	LUM HPS RWY 70W	Active	70	90435-67003	S14	CITY OF PAWTUCKET
0012	000	1	BALDWIN	ST	44	Overhead	Distribution	Luminaire	LUM HPS RWY 70W	Active	70	90435-67003	S14	CITY OF PAWTUCKET
0014	000	1	BALDWIN	ST	44	Overhead	Distribution	Luminaire	LUM HPS RWY 70W	Active	70	90435-67003	S14	CITY OF PAWTUCKET
0002	000	1	BALLOU	ST	45	Overhead	Distribution	Luminaire	LUM HPS RWY 70W	Active	70	90435-67003	S14	CITY OF PAWTUCKET
0004	000	1	BALLOU	ST	45	Overhead	Distribution	Luminaire	LUM HPS RWY 70W	Active	70	90435-67003	S14	CITY OF PAWTUCKET
0001	000	1	BALLSTON	AVE	46	Overhead	Distribution	Luminaire	LUM HPS RWY 100W	Active	100	90435-67003	S14	CITY OF PAWTUCKET
0003	000	1	BALLSTON	AVE	46	Overhead	Distribution	Luminaire	LUM HPS RWY 70W	Active	70	90435-67003	S14	CITY OF PAWTUCKET
0005	000	1	BALLSTON	AVE	46	Overhead	Distribution	Luminaire	LUM HPS RWY 70W	Active	70	90435-67003	S14	CITY OF PAWTUCKET
0007	000	1	BALLSTON	AVE	46	Overhead	Distribution	Luminaire	LUM HPS RWY 70W	Active	70	90435-67003	S14	CITY OF PAWTUCKET
0009	000	1	BALLSTON	AVE	46	Overhead	Distribution	Luminaire	LUM HPS RWY 70W	Active	70	90435-67003	S14	CITY OF PAWTUCKET
0010	000	1	BALLSTON	AVE	46	Overhead	Distribution	Luminaire	LUM HPS RWY 70W	Active	70	90435-67003	S14	CITY OF PAWTUCKET
0012	000	1	BALLSTON	AVE	46	Overhead	Distribution	Luminaire	LUM HPS RWY 70W	Active	70	90435-67003	S14	CITY OF PAWTUCKET
0014	000	1	BALLSTON	AVE	46	Overhead	Distribution	Luminaire	LUM HPS RWY 70W	Active	70	90435-67003	S14	CITY OF PAWTUCKET
0002	000	1	BARNARD	ST	47	Overhead	Distribution	Luminaire	LUM HPS RWY 70W	Active	70	90435-67003	S14	CITY OF PAWTUCKET
0002	000	1	BARNES	ST	48	Overhead	Distribution	Luminaire	LUM HPS RWY 70W	Active	70	90435-67003	S14	CITY OF PAWTUCKET
0003	000	1	BARNES	ST	48	Overhead	Distribution	Luminaire	LUM HPS RWY 70W	Active	70	90435-67003	S14	CITY OF PAWTUCKET
0004	011	0	BARNES	ST	48	Overhead	Streetlighting	Pole	POLE - WOOD	Active	0	3371-64002	S14	CITY OF PAWTUCKET
0004	011	1	BARNES	ST	48	Overhead	Streetlighting	Luminaire	LUM HPS FLD 400W	Active	400	3371-64002	S14	CITY OF PAWTUCKET
0003	000	1	BARNEY	AVE	49	Overhead	Distribution	Luminaire	LUM HPS RWY 70W	Active	70	90435-67003	S14	CITY OF PAWTUCKET
0004	000	1	BARNEY	AVE	49	Overhead	Distribution	Luminaire	LUM HPS RWY 70W	Active	70	90435-67003	S14	CITY OF PAWTUCKET
0005	000	1	BARNEY	AVE	49	Overhead	Distribution	Luminaire	LUM HPS RWY 70W	Active	70	90435-67003	S14	CITY OF PAWTUCKET
0002	000	1	BART	DR	50	Overhead	Distribution	Luminaire	LUM HPS RWY 100W	Active	100	90435-67003	S14	CITY OF PAWTUCKET
0003	000	1	BART	DR	50	Overhead	Distribution	Luminaire	LUM HPS RWY 100W	Active	100	90435-67003	S14	CITY OF PAWTUCKET
0002	000	1	BARTON	ST	51	Overhead	Distribution	Luminaire	LUM HPS RWY 100W	Active	100	90435-67003	S14	CITY OF PAWTUCKET
0005	000	1	BARTON	ST	51	Overhead	Distribution	Luminaire	LUM HPS RWY 250W	Active	250	90435-67003	S14	CITY OF PAWTUCKET
0006	000	1	BARTON	ST	51	Overhead	Distribution	Luminaire	LUM HPS FLD 400W	Active	400	90435-67003	S14	CITY OF PAWTUCKET
0007	000	1	BARTON	ST	51	Overhead	Distribution	Luminaire	LUM HPS RWY 250W	Active	250	90435-67003	S14	CITY OF PAWTUCKET
0010	000	1	BARTON	ST	51	Overhead	Distribution	Luminaire	LUM HPS RWY 250W	Active	250	90435-67003	S14	CITY OF PAWTUCKET
0012	000	1	BARTON	ST	51	Overhead	Distribution	Luminaire	LUM HPS FLD 250W	Active	250	3371-64002	S14	CITY OF PAWTUCKET
0014	000	1	BARTON	ST	51	Overhead	Distribution	Luminaire	LUM HPS RWY 250W	Active	250	90435-67003	S14	CITY OF PAWTUCKET
0018	000	1	BARTON	ST	51	Overhead	Distribution	Luminaire	LUM HPS RWY 250W	Active	250	90435-67003	S14	CITY OF PAWTUCKET
0020	000	1	BARTON	ST	51	Overhead	Distribution	Luminaire	LUM HPS RWY 100W	Active	100	90435-67003	S14	CITY OF PAWTUCKET
0022	000	1	BARTON	ST	51	Overhead	Distribution	Luminaire	LUM HPS RWY 250W	Active	250	90435-67003	S14	CITY OF PAWTUCKET
0024	000	1	BARTON	ST	51	Overhead	Distribution	Luminaire	LUM HPS RWY 70W	Active	70	90435-67003	S14	CITY OF PAWTUCKET
0026	000	1	BARTON	ST	51	Overhead	Distribution	Luminaire	LUM HPS RWY 250W	Active	250	90435-67003	S14	CITY OF PAWTUCKET
0028	000	2	BARTON	ST	51	Overhead	Distribution	Luminaire	LUM HPS RWY 250W	Active	250	90435-67003	S14	CITY OF PAWTUCKET
0030	000	1	BARTON	ST	51	Overhead	Distribution	Luminaire	LUM HPS RWY 250W	Active	250	90435-67003	S14	CITY OF PAWTUCKET
0034	000	1	BARTON	ST	51	Overhead	Distribution	Luminaire	LUM HPS RWY 250W	Active	250	90435-67003	S14	CITY OF PAWTUCKET
0036	000	1	BARTON	ST	51	Overhead	Distribution	Luminaire	LUM HPS RWY 250W	Active	250	90435-67003	S14	CITY OF PAWTUCKET
0038	000	1	BARTON	ST	51	Overhead	Distribution	Luminaire	LUM HPS RWY 250W	Active	250	90435-67003	S14	CITY OF PAWTUCKET
0042	000	1	BARTON	ST	51	Overhead	Distribution	Luminaire	LUM HPS RWY 250W	Active	250	90435-67003	S14	CITY OF PAWTUCKET
0044	000	1	BARTON	ST	51	Overhead	Distribution	Luminaire	LUM HPS RWY 250W	Active	250	90435-67003	S14	CITY OF PAWTUCKET
0052	000	1	BARTON	ST	51	Overhead	Distribution	Luminaire	LUM HPS RWY 250W	Active	250	90435-67003	S14	CITY OF PAWTUCKET
0056	000	1	BARTON	ST	51	Overhead	Distribution	Luminaire	LUM HPS RWY 250W	Active	250	90435-67003	S14	CITY OF PAWTUCKET
0060	000	1	BARTON	ST	51	Overhead	Distribution	Luminaire	LUM HPS RWY 250W	Active	250	90435-67003	S14	CITY OF PAWTUCKET
0064	000	1	BARTON	ST	51	Overhead	Distribution	Luminaire	LUM HPS RWY 250W	Active	250	90435-67003	S14	CITY OF PAWTUCKET
0002	000	1	BASSETT	ST	52	Overhead	Distribution	Luminaire	LUM HPS RWY 70W	Active	70	90435-67003	S14	CITY OF PAWTUCKET
0004	000	1	BASSETT	ST	52	Overhead	Distribution	Luminaire	LUM HPS RWY 70W	Active	70	90435-67003	S14	CITY OF PAWTUCKET
0007	000	1	BASSETT	ST	52	Overhead	Distribution	Luminaire	LUM HPS RWY 70W	Active	70	90435-67003	S14	CITY OF PAWTUCKET
0002	000	1	BATES	ST	53	Overhead	Distribution	Luminaire	LUM HPS RWY 70W	Active	70	90435-67003	S14	CITY OF PAWTUCKET
0003	000	1	BATES	ST	53	Overhead	Distribution	Luminaire	LUM HPS RWY 70W	Active	70	90435-67003	S14	CITY OF PAWTUCKET
0005	000	1	BATES	ST	53	Overhead	Distribution	Luminaire	LUM HPS RWY 70W	Active	70	90435-67003	S14	CITY OF PAWTUCKET
0006	000	1	BATES	ST	53	Overhead	Distribution	Luminaire	LUM HPS RWY 70W	Active	70	90435-67003	S14	CITY OF PAWTUCKET
0008	000	1	BATES	ST	53	Overhead	Distribution	Luminaire	LUM HPS RWY 70W	Active	70	90435-67003	S14	CITY OF PAWTUCKET
0001	000	1	BAXTER	ST	54	Overhead	Distribution	Luminaire	LUM HPS FLD 400W	Active	400	28129-70006	S14	PAWTUCKET SCH DEPT
0002	000	1	BAXTER	ST	54	Overhead	Distribution	Luminaire	LUM HPS RWY 70W	Active	70	90435-67003	S14	CITY OF PAWTUCKET
0004	000	1	BAXTER	ST	54	Overhead	Distribution	Luminaire	LUM HPS FLD 250W	Active	250	28129-70006	S14	PAWTUCKET SCH DEPT

0004	000	2	BAXTER	ST	54	Overhead	Distribution	Luminaire	LUM HPS RWY 70W	Active	70	90435-67003	S14	CITY OF PAWTUCKET
0006	000	1	BAXTER	ST	54	Overhead	Distribution	Luminaire	LUM HPS RWY 70W	Active	70	90435-67003	S14	CITY OF PAWTUCKET
0008	000	1	BAXTER	ST	54	Overhead	Distribution	Luminaire	LUM HPS RWY 70W	Active	70	90435-67003	S14	CITY OF PAWTUCKET
0009	000	1	BAXTER	ST	54	Overhead	Distribution	Luminaire	LUM HPS RWY 70W	Active	70	90435-67003	S14	CITY OF PAWTUCKET
0011	000	1	BAXTER	ST	54	Overhead	Distribution	Luminaire	LUM HPS RWY 70W	Active	70	90435-67003	S14	CITY OF PAWTUCKET
0013	000	1	BAXTER	ST	54	Overhead	Distribution	Luminaire	LUM HPS RWY 70W	Active	70	90435-67003	S14	CITY OF PAWTUCKET
0015	000	1	BAXTER	ST	54	Overhead	Distribution	Luminaire	LUM HPS RWY 70W	Active	70	90435-67003	S14	CITY OF PAWTUCKET
0017	000	1	BAXTER	ST	54	Overhead	Distribution	Luminaire	LUM HPS RWY 70W	Active	70	90435-67003	S14	CITY OF PAWTUCKET
0018	000	1	BAXTER	ST	54	Overhead	Distribution	Luminaire	LUM HPS RWY 100W	Active	100	90435-67003	S14	CITY OF PAWTUCKET
0019	000	1	BAXTER	ST	54	Overhead	Distribution	Luminaire	LUM HPS RWY 70W	Active	70	90435-67003	S14	CITY OF PAWTUCKET
0022	000	1	BAXTER	ST	54	Overhead	Distribution	Luminaire	LUM HPS RWY 70W	Active	70	90435-67003	S14	CITY OF PAWTUCKET
0024	000	1	BAXTER	ST	54	Overhead	Distribution	Luminaire	LUM HPS RWY 70W	Active	70	90435-67003	S14	CITY OF PAWTUCKET
0002	000	1	BAYLEY	ST	55	Overhead	Distribution	Luminaire	LUM HPS RWY 100W	Active	100	90435-67003	S14	CITY OF PAWTUCKET
0004	000	1	BAYLEY	ST	55	Overhead	Distribution	Luminaire	LUM HPS RWY 100W	Active	100	90435-67003	S14	CITY OF PAWTUCKET
0008	000	1	BAYLEY	ST	55	Overhead	Distribution	Luminaire	LUM HPS RWY 100W	Active	100	90435-67003	S14	CITY OF PAWTUCKET
0010	000	1	BAYLEY	ST	55	Overhead	Distribution	Luminaire	LUM HPS RWY 100W	Active	100	90435-67003	S14	CITY OF PAWTUCKET
0002	000	1	BEDFORD	RD	57	Overhead	Distribution	Luminaire	LUM HPS RWY 70W	Active	70	90435-67003	S14	CITY OF PAWTUCKET
0004	000	1	BEDFORD	RD	57	Overhead	Distribution	Luminaire	LUM HPS RWY 70W	Active	70	90435-67003	S14	CITY OF PAWTUCKET
0002	000	1	BEECH	ST	58	Overhead	Distribution	Luminaire	LUM HPS RWY 70W	Active	70	90435-67003	S14	CITY OF PAWTUCKET
0003	000	1	BEECH	ST	58	Overhead	Distribution	Luminaire	LUM HPS RWY 70W	Active	70	90435-67003	S14	CITY OF PAWTUCKET
0007	000	1	BEECH	ST	58	Overhead	Distribution	Luminaire	LUM HPS RWY 70W	Active	70	90435-67003	S14	CITY OF PAWTUCKET
0002	000	1	BEECHER	ST	59	Overhead	Distribution	Luminaire	LUM HPS RWY 70W	Active	70	90435-67003	S14	CITY OF PAWTUCKET
0004	000	1	BEECHER	ST	59	Overhead	Distribution	Luminaire	LUM HPS RWY 100W	Active	100	90435-67003	S14	CITY OF PAWTUCKET
0006	000	1	BEECHER	ST	59	Overhead	Distribution	Luminaire	LUM HPS RWY 70W	Active	70	90435-67003	S14	CITY OF PAWTUCKET
0008	000	1	BEECHER	ST	59	Overhead	Distribution	Luminaire	LUM HPS RWY 100W	Active	100	90435-67003	S14	CITY OF PAWTUCKET
0002	000	1	BEECHWOOD	AVE	60	Overhead	Distribution	Luminaire	LUM HPS RWY 70W	Active	70	90435-67003	S14	CITY OF PAWTUCKET
0004	000	1	BEECHWOOD	AVE	60	Overhead	Distribution	Luminaire	LUM HPS RWY 70W	Active	70	90435-67003	S14	CITY OF PAWTUCKET
0006	000	1	BEECHWOOD	AVE	60	Overhead	Distribution	Luminaire	LUM HPS RWY 100W	Active	100	90435-67003	S14	CITY OF PAWTUCKET
0008	000	1	BEECHWOOD	AVE	60	Overhead	Distribution	Luminaire	LUM HPS RWY 100W	Active	100	90435-67003	S14	CITY OF PAWTUCKET
0010	000	1	BEECHWOOD	AVE	60	Overhead	Distribution	Luminaire	LUM HPS RWY 100W	Active	100	90435-67003	S14	CITY OF PAWTUCKET
0011	000	1	BEECHWOOD	AVE	60	Overhead	Distribution	Luminaire	LUM HPS RWY 100W	Active	100	90435-67003	S14	CITY OF PAWTUCKET
0011	001	1	BEECHWOOD	AVE	60	Overhead	Distribution	Luminaire	LUM HPS RWY 100W	Active	100	90435-67003	S14	CITY OF PAWTUCKET
0014	000	1	BEECHWOOD	AVE	60	Overhead	Distribution	Luminaire	LUM HPS RWY 70W	Active	70	90435-67003	S14	CITY OF PAWTUCKET
0001	000	1	BELGRADE	AVE	61	Overhead	Distribution	Luminaire	LUM HPS RWY 70W	Active	70	90435-67003	S14	CITY OF PAWTUCKET
0003	000	1	BELGRADE	AVE	61	Overhead	Distribution	Luminaire	LUM HPS RWY 70W	Active	70	90435-67003	S14	CITY OF PAWTUCKET
0002	000	1	BELLA	AVE	62	Overhead	Distribution	Luminaire	LUM HPS RWY 70W	Active	70	90435-67003	S14	CITY OF PAWTUCKET
0001	000	1	BELLEVUE	AVE	63	Overhead	Distribution	Luminaire	LUM HPS RWY 100W	Active	100	90435-67003	S14	CITY OF PAWTUCKET
0003	000	1	BELLEVUE	AVE	63	Overhead	Distribution	Luminaire	LUM HPS RWY 70W	Active	70	90435-67003	S14	CITY OF PAWTUCKET
0005	000	1	BELLEVUE	AVE	63	Overhead	Distribution	Luminaire	LUM HPS RWY 70W	Active	70	90435-67003	S14	CITY OF PAWTUCKET
0009	000	1	BELLEVUE	AVE	63	Overhead	Distribution	Luminaire	LUM HPS RWY 70W	Active	70	90435-67003	S14	CITY OF PAWTUCKET
0011	000	1	BELLEVUE	AVE	63	Overhead	Distribution	Luminaire	LUM HPS RWY 70W	Active	70	90435-67003	S14	CITY OF PAWTUCKET
0001	000	1	BELLMORE	DR	64	Overhead	Distribution	Luminaire	LUM HPS RWY 70W	Active	70	90435-67003	S14	CITY OF PAWTUCKET
0003	000	1	BELLMORE	DR	64	Overhead	Distribution	Luminaire	LUM HPS RWY 70W	Active	70	90435-67003	S14	CITY OF PAWTUCKET
0004	000	1	BELLMORE	DR	64	Overhead	Distribution	Luminaire	LUM HPS RWY 70W	Active	70	90435-67003	S14	CITY OF PAWTUCKET
0001	001	1	BELMONT	ST	65	Overhead	Distribution	Luminaire	LUM HPS RWY 70W	Active	70	90435-67003	S14	CITY OF PAWTUCKET
0002	000	1	BELMONT	ST	65	Overhead	Distribution	Luminaire	LUM HPS RWY 70W	Active	70	90435-67003	S14	CITY OF PAWTUCKET
0003	000	1	BELMONT	ST	65	Overhead	Distribution	Luminaire	LUM HPS RWY 70W	Active	70	90435-67003	S14	CITY OF PAWTUCKET
0004	000	1	BELMONT	ST	65	Overhead	Distribution	Luminaire	LUM HPS RWY 70W	Active	70	90435-67003	S14	CITY OF PAWTUCKET
0006	000	1	BELMONT	ST	65	Overhead	Distribution	Luminaire	LUM HPS RWY 70W	Active	70	90435-67003	S14	CITY OF PAWTUCKET
0008	000	1	BELMONT	ST	65	Overhead	Distribution	Luminaire	LUM HPS RWY 70W	Active	70	90435-67003	S14	CITY OF PAWTUCKET
0010	000	1	BELMONT	ST	65	Overhead	Distribution	Luminaire	LUM HPS RWY 70W	Active	70	90435-67003	S14	CITY OF PAWTUCKET
0001	000	1	BEN MONDOR	WAY	784	Overhead	Distribution	Luminaire	LUM HPS FLD 400W	Active	400	90435-67003	S14	CITY OF PAWTUCKET
0001	001	1	BENEDICT	ST	66	Overhead	Distribution	Luminaire	LUM HPS RWY 70W	Active	70	90435-67003	S14	CITY OF PAWTUCKET
0002	000	1	BENEDICT	ST	66	Overhead	Distribution	Luminaire	LUM HPS RWY 70W	Active	70	90435-67003	S14	CITY OF PAWTUCKET
0005	000	1	BENEDICT	ST	66	Overhead	Distribution	Luminaire	LUM HPS RWY 70W	Active	70	90435-67003	S14	CITY OF PAWTUCKET
0007	000	1	BENEDICT	ST	66	Overhead	Distribution	Luminaire	LUM HPS RWY 70W	Active	70	90435-67003	S14	CITY OF PAWTUCKET
0008	000	1	BENEDICT	ST	66	Overhead	Distribution	Luminaire	LUM HPS RWY 70W	Active	70	90435-67003	S14	CITY OF PAWTUCKET
0009	000	1	BENEDICT	ST	66	Overhead	Distribution	Luminaire	LUM HPS RWY 70W	Active	70	90435-67003	S14	CITY OF PAWTUCKET
0011	000	1	BENEDICT	ST	66	Overhead	Distribution	Luminaire	LUM HPS RWY 70W	Active	70	90435-67003	S14	CITY OF PAWTUCKET
0013	000	1	BENEDICT	ST	66	Overhead	Distribution	Luminaire	LUM HPS RWY 70W	Active	70	90435-67003	S14	CITY OF PAWTUCKET
0015	000	1	BENEDICT	ST	66	Overhead	Distribution	Luminaire	LUM HPS RWY 70W	Active	70	90435-67003	S14	CITY OF PAWTUCKET
0001	000	1	BENEFIT	ST	67	Overhead	Distribution	Luminaire	LUM HPS RWY 100W	Active	100	90435-67003	S14	CITY OF PAWTUCKET
0003	001	1	BENEFIT	ST	67	Overhead	Distribution	Luminaire	LUM HPS RWY 100W	Active	100	90435-67003	S14	CITY OF PAWTUCKET

0005	000	1	BENEFIT	ST	67	Overhead	Distribution	Luminaire	LUM HPS RWY 100W	Active	100	90435-67003	S14	CITY OF PAWTUCKET
0006	000	1	BENEFIT	ST	67	Overhead	Distribution	Luminaire	LUM HPS RWY 100W	Active	100	90435-67003	S14	CITY OF PAWTUCKET
0007	000	1	BENEFIT	ST	67	Overhead	Distribution	Luminaire	LUM HPS RWY 100W	Active	100	90435-67003	S14	CITY OF PAWTUCKET
0008	000	1	BENEFIT	ST	67	Overhead	Distribution	Luminaire	LUM HPS RWY 100W	Active	100	90435-67003	S14	CITY OF PAWTUCKET
0009	000	1	BENEFIT	ST	67	Overhead	Distribution	Luminaire	LUM HPS RWY 100W	Active	100	90435-67003	S14	CITY OF PAWTUCKET
0010	000	1	BENEFIT	ST	67	Overhead	Distribution	Luminaire	LUM HPS RWY 100W	Active	100	90435-67003	S14	CITY OF PAWTUCKET
0011	000	1	BENEFIT	ST	67	Overhead	Distribution	Luminaire	LUM HPS RWY 100W	Active	100	90435-67003	S14	CITY OF PAWTUCKET
0012	000	1	BENEFIT	ST	67	Overhead	Distribution	Luminaire	LUM HPS RWY 100W	Active	100	90435-67003	S14	CITY OF PAWTUCKET
0013	000	1	BENEFIT	ST	67	Overhead	Distribution	Luminaire	LUM HPS RWY 100W	Active	100	90435-67003	S14	CITY OF PAWTUCKET
0015	000	1	BENEFIT	ST	67	Overhead	Distribution	Luminaire	LUM HPS RWY 100W	Active	100	90435-67003	S14	CITY OF PAWTUCKET
0016	000	1	BENEFIT	ST	67	Overhead	Distribution	Luminaire	LUM HPS RWY 100W	Active	100	90435-67003	S14	CITY OF PAWTUCKET
0017	000	1	BENEFIT	ST	67	Overhead	Distribution	Luminaire	LUM HPS RWY 100W	Active	100	90435-67003	S14	CITY OF PAWTUCKET
0018	000	1	BENEFIT	ST	67	Overhead	Distribution	Luminaire	LUM HPS RWY 100W	Active	100	90435-67003	S14	CITY OF PAWTUCKET
0019	000	1	BENEFIT	ST	67	Overhead	Distribution	Luminaire	LUM HPS RWY 100W	Active	100	90435-67003	S14	CITY OF PAWTUCKET
0020	000	1	BENEFIT	ST	67	Overhead	Distribution	Luminaire	LUM HPS RWY 100W	Active	100	90435-67003	S14	CITY OF PAWTUCKET
0021	000	1	BENEFIT	ST	67	Overhead	Distribution	Luminaire	LUM HPS RWY 100W	Active	100	90435-67003	S14	CITY OF PAWTUCKET
0022	000	1	BENEFIT	ST	67	Overhead	Distribution	Luminaire	LUM HPS RWY 250W	Active	250	90435-67003	S14	CITY OF PAWTUCKET
0023	000	1	BENEFIT	ST	67	Overhead	Distribution	Luminaire	LUM HPS RWY 250W	Active	250	90435-67003	S14	CITY OF PAWTUCKET
0025	000	1	BENEFIT	ST	67	Overhead	Distribution	Luminaire	LUM HPS RWY 250W	Active	250	90435-67003	S14	CITY OF PAWTUCKET
0026	001	1	BENEFIT	ST	67	Overhead	Distribution	Luminaire	LUM HPS RWY 250W	Active	250	90435-67003	S14	CITY OF PAWTUCKET
0028	000	1	BENEFIT	ST	67	Overhead	Distribution	Luminaire	LUM HPS RWY 100W	Active	100	90435-67003	S14	CITY OF PAWTUCKET
0029	000	1	BENEFIT	ST	67	Overhead	Distribution	Luminaire	LUM HPS RWY 100W	Active	100	90435-67003	S14	CITY OF PAWTUCKET
0030	000	1	BENEFIT	ST	67	Overhead	Distribution	Luminaire	LUM HPS RWY 100W	Active	100	90435-67003	S14	CITY OF PAWTUCKET
0032	000	1	BENEFIT	ST	67	Overhead	Distribution	Luminaire	LUM HPS RWY 100W	Active	100	90435-67003	S14	CITY OF PAWTUCKET
0034	000	1	BENEFIT	ST	67	Overhead	Distribution	Luminaire	LUM HPS RWY 100W	Active	100	90435-67003	S14	CITY OF PAWTUCKET
0036	000	1	BENEFIT	ST	67	Overhead	Distribution	Luminaire	LUM HPS RWY 100W	Active	100	90435-67003	S14	CITY OF PAWTUCKET
0038	000	1	BENEFIT	ST	67	Overhead	Distribution	Luminaire	LUM HPS RWY 100W	Active	100	90435-67003	S14	CITY OF PAWTUCKET
0039	000	1	BENEFIT	ST	67	Overhead	Distribution	Luminaire	LUM HPS RWY 100W	Active	100	90435-67003	S14	CITY OF PAWTUCKET
0040	000	1	BENEFIT	ST	67	Overhead	Distribution	Luminaire	LUM HPS RWY 100W	Active	100	90435-67003	S14	CITY OF PAWTUCKET
0041	000	1	BENEFIT	ST	67	Overhead	Distribution	Luminaire	LUM HPS RWY 100W	Active	100	90435-67003	S14	CITY OF PAWTUCKET
0042	000	1	BENEFIT	ST	67	Overhead	Distribution	Luminaire	LUM HPS RWY 100W	Active	100	90435-67003	S14	CITY OF PAWTUCKET
0044	000	1	BENEFIT	ST	67	Overhead	Distribution	Luminaire	LUM HPS RWY 100W	Active	100	90435-67003	S14	CITY OF PAWTUCKET
0045	000	1	BENEFIT	ST	67	Overhead	Distribution	Luminaire	LUM HPS RWY 100W	Active	100	90435-67003	S14	CITY OF PAWTUCKET
0046	000	1	BENEFIT	ST	67	Overhead	Distribution	Luminaire	LUM HPS RWY 100W	Active	100	90435-67003	S14	CITY OF PAWTUCKET
0046	001	1	BENEFIT	ST	67	Overhead	Distribution	Luminaire	LUM HPS RWY 250W	Active	250	90435-67003	S14	CITY OF PAWTUCKET
0047	000	1	BENEFIT	ST	67	Overhead	Distribution	Luminaire	LUM HPS RWY 100W	Active	100	90435-67003	S14	CITY OF PAWTUCKET
0048	000	1	BENEFIT	ST	67	Overhead	Distribution	Luminaire	LUM HPS RWY 100W	Active	100	90435-67003	S14	CITY OF PAWTUCKET
0049	000	1	BENEFIT	ST	67	Overhead	Distribution	Luminaire	LUM HPS RWY 100W	Active	100	90435-67003	S14	CITY OF PAWTUCKET
0050	000	1	BENEFIT	ST	67	Overhead	Distribution	Luminaire	LUM HPS RWY 100W	Active	100	90435-67003	S14	CITY OF PAWTUCKET
0051	000	1	BENEFIT	ST	67	Overhead	Distribution	Luminaire	LUM HPS RWY 100W	Active	100	90435-67003	S14	CITY OF PAWTUCKET
0052	000	1	BENEFIT	ST	67	Overhead	Distribution	Luminaire	LUM HPS RWY 100W	Active	100	90435-67003	S14	CITY OF PAWTUCKET
0053	000	1	BENEFIT	ST	67	Overhead	Distribution	Luminaire	LUM HPS RWY 100W	Active	100	90435-67003	S14	CITY OF PAWTUCKET
0054	000	1	BENEFIT	ST	67	Overhead	Distribution	Luminaire	LUM HPS RWY 250W	Active	250	90435-67003	S14	CITY OF PAWTUCKET
0055	000	1	BENEFIT	ST	67	Overhead	Distribution	Luminaire	LUM HPS RWY 100W	Active	100	90435-67003	S14	CITY OF PAWTUCKET
0056	000	1	BENEFIT	ST	67	Overhead	Distribution	Luminaire	LUM HPS RWY 100W	Active	100	90435-67003	S14	CITY OF PAWTUCKET
0057	000	1	BENEFIT	ST	67	Overhead	Distribution	Luminaire	LUM HPS RWY 100W	Active	100	90435-67003	S14	CITY OF PAWTUCKET
0058	000	1	BENEFIT	ST	67	Overhead	Distribution	Luminaire	LUM HPS RWY 100W	Active	100	90435-67003	S14	CITY OF PAWTUCKET
0059	000	1	BENEFIT	ST	67	Overhead	Distribution	Luminaire	LUM HPS RWY 100W	Active	100	90435-67003	S14	CITY OF PAWTUCKET
0060	000	1	BENEFIT	ST	67	Overhead	Distribution	Luminaire	LUM HPS RWY 100W	Active	100	90435-67003	S14	CITY OF PAWTUCKET
0061	000	1	BENEFIT	ST	67	Overhead	Distribution	Luminaire	LUM HPS RWY 100W	Active	100	90435-67003	S14	CITY OF PAWTUCKET
0062	000	1	BENEFIT	ST	67	Overhead	Distribution	Luminaire	LUM HPS RWY 100W	Active	100	90435-67003	S14	CITY OF PAWTUCKET
0063	000	1	BENEFIT	ST	67	Overhead	Distribution	Luminaire	LUM HPS RWY 100W	Active	100	90435-67003	S14	CITY OF PAWTUCKET
0064	000	1	BENEFIT	ST	67	Overhead	Distribution	Luminaire	LUM HPS RWY 100W	Active	100	90435-67003	S14	CITY OF PAWTUCKET
0064	001	1	BENEFIT	ST	67	Overhead	Distribution	Luminaire	LUM HPS RWY 100W	Active	100	90435-67003	S14	CITY OF PAWTUCKET
0065	000	1	BENEFIT	ST	67	Overhead	Distribution	Luminaire	LUM HPS RWY 100W	Active	100	90435-67003	S14	CITY OF PAWTUCKET
0066	000	1	BENEFIT	ST	67	Overhead	Distribution	Luminaire	LUM HPS RWY 100W	Active	100	90435-67003	S14	CITY OF PAWTUCKET
0067	000	1	BENEFIT	ST	67	Overhead	Distribution	Luminaire	LUM HPS RWY 100W	Active	100	90435-67003	S14	CITY OF PAWTUCKET
0068	000	1	BENEFIT	ST	67	Overhead	Distribution	Luminaire	LUM HPS RWY 100W	Active	100	90435-67003	S14	CITY OF PAWTUCKET
0069	000	1	BENEFIT	ST	67	Overhead	Distribution	Luminaire	LUM HPS RWY 100W	Active	100	90435-67003	S14	CITY OF PAWTUCKET
0070	000	1	BENEFIT	ST	67	Overhead	Distribution	Luminaire	LUM HPS RWY 100W	Active	100	90435-67003	S14	CITY OF PAWTUCKET
0070	001	1	BENEFIT	ST	67	Overhead	Distribution	Luminaire	LUM HPS FLD 250W	Active	250	40585-10002	S14	PAWTUCKET SCHOOL DEP
0071	000	1	BENEFIT	ST	67	Overhead	Distribution	Luminaire	LUM HPS RWY 100W	Active	100	90435-67003	S14	CITY OF PAWTUCKET
0072	000	1	BENEFIT	ST	67	Overhead	Distribution	Luminaire	LUM HPS RWY 100W	Active	100	90435-67003	S14	CITY OF PAWTUCKET

0072	001	1	BENEFIT	ST	67	Overhead	Distribution	Luminaire	LUM HPS RWY 100W	Active	100	90435-67003	S14	CITY OF PAWTUCKET
0072	002	1	BENEFIT	ST	67	Overhead	Distribution	Luminaire	LUM HPS FLD 400W	Active	400	40585-10002	S14	PAWTUCKET SCHOOL DEP
0073	000	1	BENEFIT	ST	67	Overhead	Distribution	Luminaire	LUM HPS RWY 100W	Active	100	90435-67003	S14	CITY OF PAWTUCKET
0074	000	1	BENEFIT	ST	67	Overhead	Distribution	Luminaire	LUM HPS RWY 100W	Active	100	90435-67003	S14	CITY OF PAWTUCKET
0075	000	1	BENEFIT	ST	67	Overhead	Distribution	Luminaire	LUM HPS RWY 100W	Active	100	90435-67003	S14	CITY OF PAWTUCKET
0076	000	1	BENEFIT	ST	67	Overhead	Distribution	Luminaire	LUM HPS RWY 100W	Active	100	90435-67003	S14	CITY OF PAWTUCKET
0077	000	1	BENEFIT	ST	67	Overhead	Distribution	Luminaire	LUM HPS RWY 100W	Active	100	90435-67003	S14	CITY OF PAWTUCKET
0078	001	1	BENEFIT	ST	67	Overhead	Distribution	Luminaire	LUM HPS RWY 100W	Active	100	90435-67003	S14	CITY OF PAWTUCKET
0079	000	1	BENEFIT	ST	67	Overhead	Distribution	Luminaire	LUM HPS RWY 100W	Active	100	90435-67003	S14	CITY OF PAWTUCKET
0080	000	1	BENEFIT	ST	67	Overhead	Distribution	Luminaire	LUM HPS RWY 100W	Active	100	90435-67003	S14	CITY OF PAWTUCKET
0081	000	1	BENEFIT	ST	67	Overhead	Distribution	Luminaire	LUM HPS RWY 100W	Active	100	90435-67003	S14	CITY OF PAWTUCKET
0082	000	1	BENEFIT	ST	67	Overhead	Distribution	Luminaire	LUM HPS RWY 100W	Active	100	90435-67003	S14	CITY OF PAWTUCKET
0084	000	1	BENEFIT	ST	67	Overhead	Distribution	Luminaire	LUM HPS RWY 100W	Active	100	90435-67003	S14	CITY OF PAWTUCKET
0085	000	1	BENEFIT	ST	67	Overhead	Distribution	Luminaire	LUM HPS RWY 100W	Active	100	90435-67003	S14	CITY OF PAWTUCKET
0087	000	1	BENEFIT	ST	67	Overhead	Distribution	Luminaire	LUM HPS RWY 250W	Active	250	90435-67003	S14	CITY OF PAWTUCKET
0002	000	1	BENJAMIN	ST	68	Overhead	Distribution	Luminaire	LUM HPS RWY 70W	Active	70	90435-67003	S14	CITY OF PAWTUCKET
0004	000	1	BENJAMIN	ST	68	Overhead	Distribution	Luminaire	LUM HPS RWY 70W	Active	70	90435-67003	S14	CITY OF PAWTUCKET
0006	000	1	BENJAMIN	ST	68	Overhead	Distribution	Luminaire	LUM HPS RWY 70W	Active	70	90435-67003	S14	CITY OF PAWTUCKET
0008	000	1	BENJAMIN	ST	68	Overhead	Distribution	Luminaire	LUM HPS RWY 70W	Active	70	90435-67003	S14	CITY OF PAWTUCKET
0012	000	1	BENJAMIN	ST	68	Overhead	Distribution	Luminaire	LUM HPS RWY 70W	Active	70	90435-67003	S14	CITY OF PAWTUCKET
0013	000	1	BENJAMIN	ST	68	Overhead	Distribution	Luminaire	LUM HPS RWY 70W	Active	70	90435-67003	S14	CITY OF PAWTUCKET
0014	000	1	BENJAMIN	ST	68	Overhead	Distribution	Luminaire	LUM HPS RWY 70W	Active	70	90435-67003	S14	CITY OF PAWTUCKET
0015	000	1	BENJAMIN	ST	68	Overhead	Distribution	Luminaire	LUM HPS RWY 70W	Active	70	90435-67003	S14	CITY OF PAWTUCKET
0019	000	1	BENJAMIN	ST	68	Overhead	Distribution	Luminaire	LUM HPS RWY 70W	Active	70	90435-67003	S14	CITY OF PAWTUCKET
0021	000	1	BENJAMIN	ST	68	Overhead	Distribution	Luminaire	LUM HPS RWY 70W	Active	70	90435-67003	S14	CITY OF PAWTUCKET
0023	000	1	BENJAMIN	ST	68	Overhead	Distribution	Luminaire	LUM HPS RWY 70W	Active	70	90435-67003	S14	CITY OF PAWTUCKET
0001	000	1	BENSLEY	ST	69	Overhead	Distribution	Luminaire	LUM HPS RWY 70W	Active	70	90435-67003	S14	CITY OF PAWTUCKET
0002	000	1	BENSLEY	ST	69	Overhead	Distribution	Luminaire	LUM HPS RWY 70W	Active	70	90435-67003	S14	CITY OF PAWTUCKET
0003	000	1	BERNDT	ST	70	Overhead	Distribution	Luminaire	LUM HPS RWY 70W	Active	70	90435-67003	S14	CITY OF PAWTUCKET
0001	000	1	BEVERAGE HILL	AVE	72	Overhead	Distribution	Luminaire	LUM HPS RWY 250W	Active	250	90435-67003	S14	CITY OF PAWTUCKET
0001	002	1	BEVERAGE HILL	AVE	72	Overhead	Distribution	Luminaire	LUM HPS RWY 250W	Active	250	90435-67003	S14	CITY OF PAWTUCKET
0002	000	1	BEVERAGE HILL	AVE	72	Overhead	Distribution	Luminaire	LUM HPS RWY 250W	Active	250	90435-67003	S14	CITY OF PAWTUCKET
0002	001	1	BEVERAGE HILL	AVE	72	Overhead	Distribution	Luminaire	LUM HPS RWY 250W	Active	250	90435-67003	S14	CITY OF PAWTUCKET
0003	000	1	BEVERAGE HILL	AVE	72	Overhead	Distribution	Luminaire	LUM HPS RWY 250W	Active	250	90435-67003	S14	CITY OF PAWTUCKET
0003	001	1	BEVERAGE HILL	AVE	72	Overhead	Distribution	Luminaire	LUM HPS RWY 250W	Active	250	90435-67003	S14	CITY OF PAWTUCKET
0003	002	1	BEVERAGE HILL	AVE	72	Overhead	Distribution	Luminaire	LUM HPS RWY 250W	Active	250	90435-67003	S14	CITY OF PAWTUCKET
0004	000	1	BEVERAGE HILL	AVE	72	Overhead	Distribution	Luminaire	LUM HPS RWY 250W	Active	250	90435-67003	S14	CITY OF PAWTUCKET
0005	000	1	BEVERAGE HILL	AVE	72	Overhead	Distribution	Luminaire	LUM HPS RWY 250W	Active	250	90435-67003	S14	CITY OF PAWTUCKET
0006	000	1	BEVERAGE HILL	AVE	72	Overhead	Distribution	Luminaire	LUM HPS RWY 250W	Active	250	90435-67003	S14	CITY OF PAWTUCKET
0007	000	1	BEVERAGE HILL	AVE	72	Overhead	Distribution	Luminaire	LUM HPS RWY 250W	Active	250	90435-67003	S14	CITY OF PAWTUCKET
0008	000	1	BEVERAGE HILL	AVE	72	Overhead	Distribution	Luminaire	LUM HPS RWY 250W	Active	250	90435-67003	S14	CITY OF PAWTUCKET
0009	000	1	BEVERAGE HILL	AVE	72	Overhead	Distribution	Luminaire	LUM HPS RWY 250W	Active	250	90435-67003	S14	CITY OF PAWTUCKET
0010	000	1	BEVERAGE HILL	AVE	72	Overhead	Distribution	Luminaire	LUM HPS RWY 100W	Active	100	90435-67003	S14	CITY OF PAWTUCKET
0011	000	1	BEVERAGE HILL	AVE	72	Overhead	Distribution	Luminaire	LUM HPS RWY 100W	Active	100	90435-67003	S14	CITY OF PAWTUCKET
0012	000	1	BEVERAGE HILL	AVE	72	Overhead	Distribution	Luminaire	LUM HPS RWY 100W	Active	100	90435-67003	S14	CITY OF PAWTUCKET
0012	001	1	BEVERAGE HILL	AVE	72	Overhead	Distribution	Luminaire	LUM HPS RWY 100W	Active	100	90435-67003	S14	CITY OF PAWTUCKET
0013	000	1	BEVERAGE HILL	AVE	72	Overhead	Distribution	Luminaire	LUM HPS RWY 100W	Active	100	90435-67003	S14	CITY OF PAWTUCKET
0014	000	1	BEVERAGE HILL	AVE	72	Overhead	Distribution	Luminaire	LUM HPS RWY 100W	Active	100	90435-67003	S14	CITY OF PAWTUCKET
0015	000	1	BEVERAGE HILL	AVE	72	Overhead	Distribution	Luminaire	LUM HPS RWY 100W	Active	100	90435-67003	S14	CITY OF PAWTUCKET
0016	000	1	BEVERAGE HILL	AVE	72	Overhead	Distribution	Luminaire	LUM HPS RWY 100W	Active	100	90435-67003	S14	CITY OF PAWTUCKET
0017	000	1	BEVERAGE HILL	AVE	72	Overhead	Distribution	Luminaire	LUM HPS RWY 100W	Active	100	90435-67003	S14	CITY OF PAWTUCKET
0018	000	1	BEVERAGE HILL	AVE	72	Overhead	Distribution	Luminaire	LUM HPS RWY 100W	Active	100	90435-67003	S14	CITY OF PAWTUCKET
0019	000	1	BEVERAGE HILL	AVE	72	Overhead	Distribution	Luminaire	LUM HPS RWY 100W	Active	100	90435-67003	S14	CITY OF PAWTUCKET
0020	000	1	BEVERAGE HILL	AVE	72	Overhead	Distribution	Luminaire	LUM HPS RWY 100W	Active	100	90435-67003	S14	CITY OF PAWTUCKET
0021	000	1	BEVERAGE HILL	AVE	72	Overhead	Distribution	Luminaire	LUM HPS RWY 70W	Active	70	90435-67003	S14	CITY OF PAWTUCKET
0022	000	1	BEVERAGE HILL	AVE	72	Overhead	Distribution	Luminaire	LUM HPS RWY 100W	Active	100	90435-67003	S14	CITY OF PAWTUCKET
0023	000	1	BEVERAGE HILL	AVE	72	Overhead	Distribution	Luminaire	LUM HPS RWY 100W	Active	100	90435-67003	S14	CITY OF PAWTUCKET
0024	000	1	BEVERAGE HILL	AVE	72	Overhead	Distribution	Luminaire	LUM HPS RWY 100W	Active	100	90435-67003	S14	CITY OF PAWTUCKET
0025	000	1	BEVERAGE HILL	AVE	72	Overhead	Distribution	Luminaire	LUM HPS RWY 100W	Active	100	90435-67003	S14	CITY OF PAWTUCKET
0026	000	1	BEVERAGE HILL	AVE	72	Overhead	Distribution	Luminaire	LUM HPS RWY 100W	Active	100	90435-67003	S14	CITY OF PAWTUCKET
0027	000	1	BEVERAGE HILL	AVE	72	Overhead	Distribution	Luminaire	LUM HPS RWY 100W	Active	100	90435-67003	S14	CITY OF PAWTUCKET
0028	000	1	BEVERAGE HILL	AVE	72	Overhead	Distribution	Luminaire	LUM HPS RWY 100W	Active	100	90435-67003	S14	CITY OF PAWTUCKET
0028	001	1	BEVERAGE HILL	AVE	72	Overhead	Distribution	Luminaire	LUM HPS RWY 100W	Active	100	90435-67003	S14	CITY OF PAWTUCKET

0029	000	1	BEVERAGE HILL	AVE	72	Overhead	Distribution	Luminaire	LUM HPS RWY 100W	Active	100	90435-67003	S14	CITY OF PAWTUCKET
0030	000	1	BEVERAGE HILL	AVE	72	Overhead	Distribution	Luminaire	LUM HPS RWY 100W	Active	100	90435-67003	S14	CITY OF PAWTUCKET
0031	000	1	BEVERAGE HILL	AVE	72	Overhead	Distribution	Luminaire	LUM HPS RWY 100W	Active	100	90435-67003	S14	CITY OF PAWTUCKET
0032	000	1	BEVERAGE HILL	AVE	72	Overhead	Distribution	Luminaire	LUM HPS RWY 100W	Active	100	90435-67003	S14	CITY OF PAWTUCKET
0033	000	1	BEVERAGE HILL	AVE	72	Overhead	Distribution	Luminaire	LUM HPS RWY 100W	Active	100	90435-67003	S14	CITY OF PAWTUCKET
0034	000	1	BEVERAGE HILL	AVE	72	Overhead	Distribution	Luminaire	LUM HPS RWY 100W	Active	100	90435-67003	S14	CITY OF PAWTUCKET
0035	000	1	BEVERAGE HILL	AVE	72	Overhead	Distribution	Luminaire	LUM HPS RWY 100W	Active	100	90435-67003	S14	CITY OF PAWTUCKET
0036	000	1	BEVERAGE HILL	AVE	72	Overhead	Distribution	Luminaire	LUM HPS RWY 100W	Active	100	90435-67003	S14	CITY OF PAWTUCKET
0037	000	1	BEVERAGE HILL	AVE	72	Overhead	Distribution	Luminaire	LUM HPS RWY 100W	Active	100	90435-67003	S14	CITY OF PAWTUCKET
0038	000	1	BEVERAGE HILL	AVE	72	Overhead	Distribution	Luminaire	LUM HPS RWY 100W	Active	100	90435-67003	S14	CITY OF PAWTUCKET
0040	000	1	BEVERAGE HILL	AVE	72	Overhead	Distribution	Luminaire	LUM HPS RWY 100W	Active	100	90435-67003	S14	CITY OF PAWTUCKET
0041	000	1	BEVERAGE HILL	AVE	72	Overhead	Distribution	Luminaire	LUM HPS RWY 100W	Active	100	90435-67003	S14	CITY OF PAWTUCKET
0042	000	1	BEVERAGE HILL	AVE	72	Overhead	Distribution	Luminaire	LUM HPS RWY 100W	Active	100	90435-67003	S14	CITY OF PAWTUCKET
0043	000	1	BEVERAGE HILL	AVE	72	Overhead	Distribution	Luminaire	LUM HPS RWY 100W	Active	100	90435-67003	S14	CITY OF PAWTUCKET
0044	000	1	BEVERAGE HILL	AVE	72	Overhead	Distribution	Luminaire	LUM HPS RWY 250W	Active	250	90435-67003	S14	CITY OF PAWTUCKET
0044	001	1	BEVERAGE HILL	AVE	72	Overhead	Distribution	Luminaire	LUM HPS RWY 250W	Active	250	90435-67003	S14	CITY OF PAWTUCKET
0046	000	1	BEVERAGE HILL	AVE	72	Overhead	Distribution	Luminaire	LUM HPS RWY 250W	Active	250	90435-67003	S14	CITY OF PAWTUCKET
0047	001	1	BEVERAGE HILL	AVE	72	Overhead	Distribution	Luminaire	LUM HPS RWY 250W	Active	250	90435-67003	S14	CITY OF PAWTUCKET
0048	000	1	BEVERAGE HILL	AVE	72	Overhead	Distribution	Luminaire	LUM HPS RWY 250W	Active	250	90435-67003	S14	CITY OF PAWTUCKET
0049	011	1	BEVERAGE HILL	AVE	72	Overhead	Distribution	Luminaire	LUM HPS RWY 250W	Active	250	90435-67003	S14	CITY OF PAWTUCKET
0050	000	1	BEVERAGE HILL	AVE	72	Overhead	Distribution	Luminaire	LUM HPS RWY 250W	Active	250	90435-67003	S14	CITY OF PAWTUCKET
0051	001	1	BEVERAGE HILL	AVE	72	Overhead	Distribution	Luminaire	LUM HPS RWY 250W	Active	250	90435-67003	S14	CITY OF PAWTUCKET
0053	000	1	BEVERAGE HILL	AVE	72	Overhead	Distribution	Luminaire	LUM HPS RWY 250W	Active	250	90435-67003	S14	CITY OF PAWTUCKET
0003	000	1	BIRCH	ST	73	Overhead	Distribution	Luminaire	LUM HPS RWY 70W	Active	70	90435-67003	S14	CITY OF PAWTUCKET
0005	000	1	BIRCH	ST	73	Overhead	Distribution	Luminaire	LUM HPS RWY 70W	Active	70	90435-67003	S14	CITY OF PAWTUCKET
0007	000	1	BIRCH	ST	73	Overhead	Distribution	Luminaire	LUM HPS RWY 70W	Active	70	90435-67003	S14	CITY OF PAWTUCKET
0002	000	1	BIRCHLAND	AVE	74	Overhead	Distribution	Luminaire	LUM HPS RWY 70W	Active	70	90435-67003	S14	CITY OF PAWTUCKET
0004	000	1	BIRCHLAND	AVE	74	Overhead	Distribution	Luminaire	LUM HPS RWY 70W	Active	70	90435-67003	S14	CITY OF PAWTUCKET
0006	000	1	BIRCHLAND	AVE	74	Overhead	Distribution	Luminaire	LUM HPS RWY 70W	Active	70	90435-67003	S14	CITY OF PAWTUCKET
0008	000	1	BIRCHLAND	AVE	74	Overhead	Distribution	Luminaire	LUM HPS RWY 70W	Active	70	90435-67003	S14	CITY OF PAWTUCKET
0008	000	1	BISHOP	ST	75	Overhead	Distribution	Luminaire	LUM HPS RWY 70W	Active	70	90435-67003	S14	CITY OF PAWTUCKET
0009	000	1	BISHOP	ST	75	Overhead	Distribution	Luminaire	LUM HPS RWY 70W	Active	70	90435-67003	S14	CITY OF PAWTUCKET
0010	000	1	BISHOP	ST	75	Overhead	Distribution	Luminaire	LUM HPS RWY 70W	Active	70	90435-67003	S14	CITY OF PAWTUCKET
0011	000	1	BISHOP	ST	75	Overhead	Distribution	Luminaire	LUM HPS RWY 70W	Active	70	90435-67003	S14	CITY OF PAWTUCKET
0002	000	1	BLACKBURN	ST	76	Overhead	Distribution	Luminaire	LUM HPS RWY 70W	Active	70	90435-67003	S14	CITY OF PAWTUCKET
0004	000	1	BLACKBURN	ST	76	Overhead	Distribution	Luminaire	LUM HPS RWY 70W	Active	70	90435-67003	S14	CITY OF PAWTUCKET
0006	000	1	BLACKBURN	ST	76	Overhead	Distribution	Luminaire	LUM HPS RWY 70W	Active	70	90435-67003	S14	CITY OF PAWTUCKET
0008	000	1	BLACKBURN	ST	76	Overhead	Distribution	Luminaire	LUM HPS RWY 70W	Active	70	90435-67003	S14	CITY OF PAWTUCKET
0013	000	1	BLACKBURN	ST	76	Overhead	Distribution	Luminaire	LUM HPS RWY 70W	Active	70	90435-67003	S14	CITY OF PAWTUCKET
0014	000	1	BLACKBURN	ST	76	Overhead	Distribution	Luminaire	LUM HPS RWY 70W	Active	70	90435-67003	S14	CITY OF PAWTUCKET
0016	000	1	BLACKBURN	ST	76	Overhead	Distribution	Luminaire	LUM HPS RWY 70W	Active	70	90435-67003	S14	CITY OF PAWTUCKET
0004	000	1	BLACKSTONE	ST	77	Overhead	Distribution	Luminaire	LUM HPS RWY 70W	Active	70	90435-67003	S14	CITY OF PAWTUCKET
0008	000	1	BLACKSTONE	ST	77	Overhead	Distribution	Luminaire	LUM HPS RWY 70W	Active	70	90435-67003	S14	CITY OF PAWTUCKET
0014	000	1	BLACKSTONE	ST	77	Overhead	Distribution	Luminaire	LUM HPS RWY 70W	Active	70	90435-67003	S14	CITY OF PAWTUCKET
0016	000	1	BLACKSTONE	ST	77	Overhead	Distribution	Luminaire	LUM HPS RWY 70W	Active	70	90435-67003	S14	CITY OF PAWTUCKET
0021	000	1	BLACKSTONE	ST	77	Overhead	Distribution	Luminaire	LUM HPS RWY 70W	Active	70	90435-67003	S14	CITY OF PAWTUCKET
0023	000	1	BLACKSTONE	ST	77	Overhead	Distribution	Luminaire	LUM HPS RWY 70W	Active	70	90435-67003	S14	CITY OF PAWTUCKET
0028	000	1	BLACKSTONE	ST	77	Overhead	Distribution	Luminaire	LUM HPS RWY 70W	Active	70	90435-67003	S14	CITY OF PAWTUCKET
0030	000	1	BLACKSTONE	ST	77	Overhead	Distribution	Luminaire	LUM HPS RWY 400W	Active	400	90435-67003	S14	CITY OF PAWTUCKET
0032	000	1	BLACKSTONE	ST	77	Overhead	Distribution	Luminaire	LUM HPS RWY 100W	Active	100	90435-67003	S14	CITY OF PAWTUCKET
0037	000	1	BLACKSTONE	ST	77	Overhead	Distribution	Luminaire	LUM HPS RWY 100W	Active	100	90435-67003	S14	CITY OF PAWTUCKET
0001	000	1	BLAISDELL	AVE	78	Overhead	Distribution	Luminaire	LUM HPS RWY 100W	Active	100	90435-67003	S14	CITY OF PAWTUCKET
0003	000	1	BLAISDELL	AVE	78	Overhead	Distribution	Luminaire	LUM HPS RWY 70W	Active	70	90435-67003	S14	CITY OF PAWTUCKET
0007	000	1	BLAISDELL	AVE	78	Overhead	Distribution	Luminaire	LUM HPS RWY 70W	Active	70	90435-67003	S14	CITY OF PAWTUCKET
0009	000	1	BLAISDELL	AVE	78	Overhead	Distribution	Luminaire	LUM HPS RWY 70W	Active	70	90435-67003	S14	CITY OF PAWTUCKET
0011	000	1	BLAISDELL	AVE	78	Overhead	Distribution	Luminaire	LUM HPS RWY 70W	Active	70	90435-67003	S14	CITY OF PAWTUCKET
0014	000	1	BLAISDELL	AVE	78	Overhead	Distribution	Luminaire	LUM HPS RWY 70W	Active	70	90435-67003	S14	CITY OF PAWTUCKET
0016	000	1	BLAISDELL	AVE	78	Overhead	Distribution	Luminaire	LUM HPS RWY 70W	Active	70	90435-67003	S14	CITY OF PAWTUCKET
0018	000	1	BLAISDELL	AVE	78	Overhead	Distribution	Luminaire	LUM HPS RWY 70W	Active	70	90435-67003	S14	CITY OF PAWTUCKET
0005	000	1	BLAKE	ST	79	Overhead	Distribution	Luminaire	LUM HPS RWY 100W	Active	100	90435-67003	S14	CITY OF PAWTUCKET
0006	000	1	BLAKE	ST	79	Overhead	Distribution	Luminaire	LUM HPS RWY 100W	Active	100	90435-67003	S14	CITY OF PAWTUCKET
0007	000	1	BLAKE	ST	79	Overhead	Distribution	Luminaire	LUM HPS RWY 100W	Active	100	90435-67003	S14	CITY OF PAWTUCKET
0009	000	1	BLAKE	ST	79	Overhead	Distribution	Luminaire	LUM HPS RWY 250W	Active	250	90435-67003	S14	CITY OF PAWTUCKET

0002	000	1	BLODGETT	AVE	81	Overhead	Distribution	Luminaire	LUM HPS RWY 70W	Active	70	90435-67003	S14	CITY OF PAWTUCKET
0005	000	1	BLODGETT	AVE	81	Overhead	Distribution	Luminaire	LUM HPS RWY 70W	Active	70	90435-67003	S14	CITY OF PAWTUCKET
0009	000	1	BLODGETT	AVE	81	Overhead	Distribution	Luminaire	LUM HPS RWY 70W	Active	70	90435-67003	S14	CITY OF PAWTUCKET
0010	000	1	BLODGETT	AVE	81	Overhead	Distribution	Luminaire	LUM HPS RWY 70W	Active	70	90435-67003	S14	CITY OF PAWTUCKET
0011	000	1	BLODGETT	AVE	81	Overhead	Distribution	Luminaire	LUM HPS RWY 70W	Active	70	90435-67003	S14	CITY OF PAWTUCKET
0012	000	1	BLODGETT	AVE	81	Overhead	Distribution	Luminaire	LUM HPS RWY 70W	Active	70	90435-67003	S14	CITY OF PAWTUCKET
0013	000	1	BLODGETT	AVE	81	Overhead	Distribution	Luminaire	LUM HPS RWY 50W	Active	50	90435-67003	S14	CITY OF PAWTUCKET
0014	000	1	BLODGETT	AVE	81	Overhead	Distribution	Luminaire	LUM HPS RWY 70W	Active	70	90435-67003	S14	CITY OF PAWTUCKET
0003	000	1	BLOODGOOD	ST	82	Overhead	Distribution	Luminaire	LUM HPS RWY 70W	Active	70	90435-67003	S14	CITY OF PAWTUCKET
0005	000	1	BLOODGOOD	ST	82	Overhead	Distribution	Luminaire	LUM HPS FLD 250W	Active	250	40585-10002	S14	PAWTUCKET SCHOOL DEP
0005	000	2	BLOODGOOD	ST	82	Overhead	Distribution	Luminaire	LUM HPS RWY 70W	Active	70	90435-67003	S14	CITY OF PAWTUCKET
0007	000	1	BLOODGOOD	ST	82	Overhead	Distribution	Luminaire	LUM HPS RWY 70W	Active	70	90435-67003	S14	CITY OF PAWTUCKET
0009	000	1	BLOODGOOD	ST	82	Overhead	Distribution	Luminaire	LUM HPS RWY 70W	Active	70	90435-67003	S14	CITY OF PAWTUCKET
0010	000	1	BLOODGOOD	ST	82	Overhead	Distribution	Luminaire	LUM HPS RWY 70W	Active	70	90435-67003	S14	CITY OF PAWTUCKET
0012	000	1	BLOODGOOD	ST	82	Overhead	Distribution	Luminaire	LUM HPS RWY 70W	Active	70	90435-67003	S14	CITY OF PAWTUCKET
0014	000	1	BLOODGOOD	ST	82	Overhead	Distribution	Luminaire	LUM HPS RWY 70W	Active	70	90435-67003	S14	CITY OF PAWTUCKET
0016	000	1	BLOODGOOD	ST	82	Overhead	Distribution	Luminaire	LUM HPS RWY 70W	Active	70	90435-67003	S14	CITY OF PAWTUCKET
0018	000	1	BLOODGOOD	ST	82	Overhead	Distribution	Luminaire	LUM HPS RWY 70W	Active	70	90435-67003	S14	CITY OF PAWTUCKET
0019	000	1	BLOODGOOD	ST	82	Overhead	Distribution	Luminaire	LUM HPS RWY 70W	Active	70	90435-67003	S14	CITY OF PAWTUCKET
0002	000	1	BLOOMFIELD	ST	83	Overhead	Distribution	Luminaire	LUM HPS RWY 70W	Active	70	90435-67003	S14	CITY OF PAWTUCKET
0004	000	1	BLOOMFIELD	ST	83	Overhead	Distribution	Luminaire	LUM HPS RWY 70W	Active	70	90435-67003	S14	CITY OF PAWTUCKET
0006	000	1	BLOOMFIELD	ST	83	Overhead	Distribution	Luminaire	LUM HPS RWY 70W	Active	70	90435-67003	S14	CITY OF PAWTUCKET
0009	000	1	BLOOMFIELD	ST	83	Overhead	Distribution	Luminaire	LUM HPS RWY 70W	Active	70	90435-67003	S14	CITY OF PAWTUCKET
0010	000	1	BLOOMFIELD	ST	83	Overhead	Distribution	Luminaire	LUM HPS RWY 100W	Active	100	90435-67003	S14	CITY OF PAWTUCKET
0012	000	1	BLOOMFIELD	ST	83	Overhead	Distribution	Luminaire	LUM HPS RWY 70W	Active	70	90435-67003	S14	CITY OF PAWTUCKET
0015	000	1	BLOOMFIELD	ST	83	Overhead	Distribution	Luminaire	LUM HPS RWY 70W	Active	70	90435-67003	S14	CITY OF PAWTUCKET
0016	000	1	BLOOMFIELD	ST	83	Overhead	Distribution	Luminaire	LUM HPS RWY 70W	Active	70	90435-67003	S14	CITY OF PAWTUCKET
0019	000	1	BLOOMFIELD	ST	83	Overhead	Distribution	Luminaire	LUM HPS RWY 70W	Active	70	90435-67003	S14	CITY OF PAWTUCKET
0022	000	1	BLOOMFIELD	ST	83	Overhead	Distribution	Luminaire	LUM HPS RWY 70W	Active	70	90435-67003	S14	CITY OF PAWTUCKET
0024	000	1	BLOOMFIELD	ST	83	Overhead	Distribution	Luminaire	LUM HPS RWY 70W	Active	70	90435-67003	S14	CITY OF PAWTUCKET
0026	000	1	BLOOMFIELD	ST	83	Overhead	Distribution	Luminaire	LUM HPS RWY 70W	Active	70	90435-67003	S14	CITY OF PAWTUCKET
0028	000	1	BLOOMFIELD	ST	83	Overhead	Distribution	Luminaire	LUM HPS RWY 70W	Active	70	90435-67003	S14	CITY OF PAWTUCKET
0030	000	1	BLOOMFIELD	ST	83	Overhead	Distribution	Luminaire	LUM HPS RWY 70W	Active	70	90435-67003	S14	CITY OF PAWTUCKET
0001	000	1	BLOOMINGDALE	AVE	84	Overhead	Distribution	Luminaire	LUM HPS RWY 70W	Active	70	90435-67003	S14	CITY OF PAWTUCKET
0003	000	1	BLOOMINGDALE	AVE	84	Overhead	Distribution	Luminaire	LUM HPS RWY 70W	Active	70	90435-67003	S14	CITY OF PAWTUCKET
0005	000	1	BLOOMINGDALE	AVE	84	Overhead	Distribution	Luminaire	LUM HPS RWY 70W	Active	70	90435-67003	S14	CITY OF PAWTUCKET
0007	000	1	BLOOMINGDALE	AVE	84	Overhead	Distribution	Luminaire	LUM HPS RWY 70W	Active	70	90435-67003	S14	CITY OF PAWTUCKET
0001	000	1	BOOTH	AVE	85	Overhead	Distribution	Luminaire	LUM HPS RWY 70W	Active	70	90435-67003	S14	CITY OF PAWTUCKET
0001	001	1	BOOTH	AVE	85	Overhead	Distribution	Luminaire	LUM HPS RWY 70W	Active	70	90435-67003	S14	CITY OF PAWTUCKET
0003	000	1	BOOTH	AVE	85	Overhead	Distribution	Luminaire	LUM HPS RWY 70W	Active	70	90435-67003	S14	CITY OF PAWTUCKET
0005	000	1	BOOTH	AVE	85	Overhead	Distribution	Luminaire	LUM HPS RWY 70W	Active	70	90435-67003	S14	CITY OF PAWTUCKET
0007	000	1	BOOTH	AVE	85	Overhead	Distribution	Luminaire	LUM HPS RWY 70W	Active	70	90435-67003	S14	CITY OF PAWTUCKET
0008	000	1	BOOTH	AVE	85	Overhead	Distribution	Luminaire	LUM HPS RWY 70W	Active	70	90435-67003	S14	CITY OF PAWTUCKET
0009	000	1	BOOTH	AVE	85	Overhead	Distribution	Luminaire	LUM HPS RWY 70W	Active	70	90435-67003	S14	CITY OF PAWTUCKET
0002	000	1	BORDEN	ST	86	Overhead	Distribution	Luminaire	LUM HPS RWY 70W	Active	70	90435-67003	S14	CITY OF PAWTUCKET
0003	000	1	BORDEN	ST	86	Overhead	Distribution	Luminaire	LUM HPS RWY 70W	Active	70	90435-67003	S14	CITY OF PAWTUCKET
0005	000	1	BORDEN	ST	86	Overhead	Distribution	Luminaire	LUM HPS RWY 70W	Active	70	90435-67003	S14	CITY OF PAWTUCKET
0001	000	1	BOUTWELL	ST	87	Overhead	Distribution	Luminaire	LUM HPS RWY 70W	Active	70	90435-67003	S14	CITY OF PAWTUCKET
0002	000	1	BOUTWELL	ST	87	Overhead	Distribution	Luminaire	LUM HPS RWY 70W	Active	70	90435-67003	S14	CITY OF PAWTUCKET
0004	000	1	BOUTWELL	ST	87	Overhead	Distribution	Luminaire	LUM HPS RWY 70W	Active	70	90435-67003	S14	CITY OF PAWTUCKET
0006	000	1	BOUTWELL	ST	87	Overhead	Distribution	Luminaire	LUM HPS RWY 50W	Active	50	90435-67003	S14	CITY OF PAWTUCKET
0007	000	1	BOUTWELL	ST	87	Overhead	Distribution	Luminaire	LUM HPS RWY 100W	Active	100	90435-67003	S14	CITY OF PAWTUCKET
0009	000	1	BOUTWELL	ST	87	Overhead	Distribution	Luminaire	LUM HPS RWY 70W	Active	70	90435-67003	S14	CITY OF PAWTUCKET
0010	000	1	BOUTWELL	ST	87	Overhead	Distribution	Luminaire	LUM HPS RWY 100W	Active	100	90435-67003	S14	CITY OF PAWTUCKET
0002	000	1	BOWEN	ST	88	Overhead	Distribution	Luminaire	LUM HPS RWY 70W	Active	70	90435-67003	S14	CITY OF PAWTUCKET
0004	000	1	BOWEN	ST	88	Overhead	Distribution	Luminaire	LUM HPS RWY 70W	Active	70	90435-67003	S14	CITY OF PAWTUCKET
0005	000	1	BOWEN	ST	88	Overhead	Distribution	Luminaire	LUM HPS RWY 70W	Active	70	90435-67003	S14	CITY OF PAWTUCKET
0001	000	1	BOWERS	ST	89	Overhead	Distribution	Luminaire	LUM HPS RWY 100W	Active	100	90435-67003	S14	CITY OF PAWTUCKET
0002	000	1	BOWERS	ST	89	Overhead	Distribution	Luminaire	LUM HPS RWY 100W	Active	100	90435-67003	S14	CITY OF PAWTUCKET
0001	000	1	BOWLES	CT	90	Overhead	Distribution	Luminaire	LUM HPS FLD 400W	Active	400	90435-66006	S14	PAWTUCKET SCH DEPT
0003	000	1	BOWLES	CT	90	Overhead	Distribution	Luminaire	LUM HPS FLD 400W	Active	400	90435-66006	S14	PAWTUCKET SCH DEPT
0004	000	1	BOWLES	CT	90	Overhead	Distribution	Luminaire	LUM HPS RWY 70W	Active	70	90435-67003	S14	CITY OF PAWTUCKET
0015	000	1	BOYCE	AVE	91	Overhead	Distribution	Luminaire	LUM HPS RWY 70W	Active	70	90435-67003	S14	CITY OF PAWTUCKET

0017	000	1	BOYCE	AVE	91	Overhead	Distribution	Luminaire	LUM HPS RWY 70W	Active	70	90435-67003	S14	CITY OF PAWTUCKET
0002	000	1	BRADLEY	ST	92	Overhead	Distribution	Luminaire	LUM HPS RWY 70W	Active	70	90435-67003	S14	CITY OF PAWTUCKET
0002	000	1	BRANCH	ST	93	Overhead	Distribution	Luminaire	LUM HPS RWY 100W	Active	100	90435-67003	S14	CITY OF PAWTUCKET
0004	000	1	BRANCH	ST	93	Overhead	Distribution	Luminaire	LUM HPS RWY 100W	Active	100	90435-67003	S14	CITY OF PAWTUCKET
0006	000	1	BRANCH	ST	93	Overhead	Distribution	Luminaire	LUM HPS RWY 100W	Active	100	90435-67003	S14	CITY OF PAWTUCKET
0008	000	2	BRANCH	ST	93	Overhead	Distribution	Luminaire	LUM HPS RWY 100W	Active	100	90435-67003	S14	CITY OF PAWTUCKET
0009	000	1	BRANCH	ST	93	Overhead	Distribution	Luminaire	LUM HPS RWY 100W	Active	100	90435-67003	S14	CITY OF PAWTUCKET
0010	000	1	BRANCH	ST	93	Overhead	Distribution	Luminaire	LUM HPS RWY 100W	Active	100	90435-67003	S14	CITY OF PAWTUCKET
0011	000	2	BRANCH	ST	93	Overhead	Distribution	Luminaire	LUM HPS RWY 100W	Active	100	90435-67003	S14	CITY OF PAWTUCKET
0013	000	1	BRANCH	ST	93	Overhead	Distribution	Luminaire	LUM HPS RWY 70W	Active	70	90435-67003	S14	CITY OF PAWTUCKET
0015	000	1	BRANCH	ST	93	Overhead	Distribution	Luminaire	LUM HPS RWY 100W	Active	100	90435-67003	S14	CITY OF PAWTUCKET
0017	000	2	BRANCH	ST	93	Overhead	Distribution	Luminaire	LUM HPS RWY 100W	Active	100	90435-67003	S14	CITY OF PAWTUCKET
0002	000	1	BREWSTER	ST	94	Overhead	Distribution	Luminaire	LUM HPS RWY 70W	Active	70	90435-67003	S14	CITY OF PAWTUCKET
0004	000	1	BREWSTER	ST	94	Overhead	Distribution	Luminaire	LUM HPS RWY 70W	Active	70	90435-67003	S14	CITY OF PAWTUCKET
0006	000	1	BREWSTER	ST	94	Overhead	Distribution	Luminaire	LUM HPS RWY 70W	Active	70	90435-67003	S14	CITY OF PAWTUCKET
0007	000	1	BREWSTER	ST	94	Overhead	Distribution	Luminaire	LUM HPS RWY 70W	Active	70	90435-67003	S14	CITY OF PAWTUCKET
0010	000	1	BREWSTER	ST	94	Overhead	Distribution	Luminaire	LUM HPS RWY 100W	Active	100	90435-67003	S14	CITY OF PAWTUCKET
0011	000	1	BREWSTER	ST	94	Overhead	Distribution	Luminaire	LUM HPS RWY 100W	Active	100	90435-67003	S14	CITY OF PAWTUCKET
0012	000	1	BREWSTER	ST	94	Overhead	Distribution	Luminaire	LUM HPS RWY 100W	Active	100	90435-67003	S14	CITY OF PAWTUCKET
0013	000	1	BREWSTER	ST	94	Overhead	Distribution	Luminaire	LUM HPS RWY 70W	Active	70	90435-67003	S14	CITY OF PAWTUCKET
0014	000	1	BREWSTER	ST	94	Overhead	Distribution	Luminaire	LUM HPS RWY 100W	Active	100	90435-67003	S14	CITY OF PAWTUCKET
0015	000	1	BREWSTER	ST	94	Overhead	Distribution	Luminaire	LUM HPS RWY 100W	Active	100	90435-67003	S14	CITY OF PAWTUCKET
0016	000	1	BREWSTER	ST	94	Overhead	Distribution	Luminaire	LUM HPS RWY 100W	Active	100	90435-67003	S14	CITY OF PAWTUCKET
0017	000	1	BREWSTER	ST	94	Overhead	Distribution	Luminaire	LUM HPS RWY 70W	Active	70	90435-67003	S14	CITY OF PAWTUCKET
0019	000	1	BREWSTER	ST	94	Overhead	Distribution	Luminaire	LUM HPS RWY 70W	Active	70	90435-67003	S14	CITY OF PAWTUCKET
0001	000	1	BRISTOL	AVE	95	Overhead	Distribution	Luminaire	LUM HPS RWY 70W	Active	70	90435-67003	S14	CITY OF PAWTUCKET
0002	000	1	BRISTOL	AVE	95	Overhead	Distribution	Luminaire	LUM HPS RWY 70W	Active	70	90435-67003	S14	CITY OF PAWTUCKET
0003	000	1	BRISTOL	AVE	95	Overhead	Distribution	Luminaire	LUM HPS RWY 100W	Active	100	90435-67003	S14	CITY OF PAWTUCKET
0005	000	1	BRISTOL	AVE	95	Overhead	Distribution	Luminaire	LUM HPS RWY 100W	Active	100	90435-67003	S14	CITY OF PAWTUCKET
0007	000	1	BRISTOL	AVE	95	Overhead	Distribution	Luminaire	LUM HPS RWY 70W	Active	70	90435-67003	S14	CITY OF PAWTUCKET
0009	000	1	BRISTOL	AVE	95	Overhead	Distribution	Luminaire	LUM HPS RWY 70W	Active	70	90435-67003	S14	CITY OF PAWTUCKET
0011	000	1	BRISTOL	AVE	95	Overhead	Distribution	Luminaire	LUM HPS RWY 70W	Active	70	90435-67003	S14	CITY OF PAWTUCKET
0013	000	1	BRISTOL	AVE	95	Overhead	Distribution	Luminaire	LUM HPS RWY 100W	Active	100	90435-67003	S14	CITY OF PAWTUCKET
0016	000	1	BRISTOL	AVE	95	Overhead	Distribution	Luminaire	LUM HPS RWY 70W	Active	70	90435-67003	S14	CITY OF PAWTUCKET
0017	000	1	BRISTOL	AVE	95	Overhead	Distribution	Luminaire	LUM HPS RWY 70W	Active	70	90435-67003	S14	CITY OF PAWTUCKET
0007	000	0	BROAD	ST	96	Underground	Streetlighting	Pole	POLE METAL =>25FT	Active	0	90435-67003	S14	CITY OF PAWTUCKET
0007	000	1	BROAD	ST	96	Underground	Streetlighting	Luminaire	LUM HPS RWY 250W	Active	250	90435-67003	S14	CITY OF PAWTUCKET
0015	000	1	BROAD	ST	96	Underground	Streetlighting	Luminaire	LUM HPS RWY 250W	Active	250	90435-67003	S14	CITY OF PAWTUCKET
0016	000	0	BROAD	ST	96	Underground	Streetlighting	Pole	POLE METAL =>25FT	Active	0	90435-67003	S14	CITY OF PAWTUCKET
0016	000	1	BROAD	ST	96	Underground	Streetlighting	Luminaire	LUM HPS RWY 250W	Active	250	90435-67003	S14	CITY OF PAWTUCKET
0017	000	0	BROAD	ST	96	Underground	Streetlighting	Pole	POLE METAL =>25FT	Active	0	90435-67003	S14	CITY OF PAWTUCKET
0017	000	1	BROAD	ST	96	Underground	Streetlighting	Luminaire	LUM HPS RWY 250W	Active	250	90435-67003	S14	CITY OF PAWTUCKET
0018	000	0	BROAD	ST	96	Underground	Streetlighting	Pole	POLE METAL =>25FT	Active	0	90435-67003	S14	CITY OF PAWTUCKET
0018	000	1	BROAD	ST	96	Underground	Streetlighting	Luminaire	LUM HPS RWY 250W	Active	250	90435-67003	S14	CITY OF PAWTUCKET
0019	000	0	BROAD	ST	96	Underground	Streetlighting	Pole	POLE METAL =>25FT	Active	0	90435-67003	S14	CITY OF PAWTUCKET
0019	000	1	BROAD	ST	96	Underground	Streetlighting	Luminaire	LUM HPS RWY 250W	Active	250	90435-67003	S14	CITY OF PAWTUCKET
0020	000	0	BROAD	ST	96	Underground	Streetlighting	Pole	POLE METAL =>25FT	Active	0	90435-67003	S14	CITY OF PAWTUCKET
0020	000	1	BROAD	ST	96	Underground	Streetlighting	Luminaire	LUM HPS RWY 250W	Active	250	90435-67003	S14	CITY OF PAWTUCKET
0023	000	0	BROAD	ST	96	Underground	Streetlighting	Pole	POLE METAL =>25FT	Active	0	90435-67003	S14	CITY OF PAWTUCKET
0023	000	1	BROAD	ST	96	Underground	Streetlighting	Luminaire	LUM HPS RWY 250W	Active	250	90435-67003	S14	CITY OF PAWTUCKET
0024	000	0	BROAD	ST	96	Underground	Streetlighting	Pole	POLE METAL =>25FT	Active	0	90435-67003	S14	CITY OF PAWTUCKET
0024	000	1	BROAD	ST	96	Underground	Streetlighting	Luminaire	LUM HPS RWY 250W	Active	250	90435-67003	S14	CITY OF PAWTUCKET
0025	000	0	BROAD	ST	96	Underground	Streetlighting	Pole	POLE METAL =>25FT	Active	0	90435-67003	S14	CITY OF PAWTUCKET
0025	000	1	BROAD	ST	96	Underground	Streetlighting	Luminaire	LUM HPS RWY 250W	Active	250	90435-67003	S14	CITY OF PAWTUCKET
0026	000	1	BROAD	ST	96	Overhead	Distribution	Luminaire	LUM HPS RWY 250W	Active	250	90435-67003	S14	CITY OF PAWTUCKET
0027	000	0	BROAD	ST	96	Underground	Streetlighting	Pole	POLE METAL =>25FT	Active	0	90435-67003	S14	CITY OF PAWTUCKET
0027	000	1	BROAD	ST	96	Underground	Streetlighting	Luminaire	LUM HPS RWY 250W	Active	250	90435-67003	S14	CITY OF PAWTUCKET
0028	000	0	BROAD	ST	96	Underground	Streetlighting	Pole	POLE METAL =>25FT	Active	0	90435-67003	S14	CITY OF PAWTUCKET
0028	000	1	BROAD	ST	96	Underground	Streetlighting	Luminaire	LUM HPS RWY 400W	Active	400	90435-67003	S14	CITY OF PAWTUCKET
0029	000	0	BROAD	ST	96	Underground	Streetlighting	Pole	POLE METAL =>25FT	Active	0	90435-67003	S14	CITY OF PAWTUCKET
0029	000	1	BROAD	ST	96	Underground	Streetlighting	Luminaire	LUM HPS RWY 250W	Active	250	90435-67003	S14	CITY OF PAWTUCKET
0031	000	1	BROAD	ST	96	Overhead	Distribution	Luminaire	LUM HPS RWY 250W	Active	250	90435-67003	S14	CITY OF PAWTUCKET
0031	000	2	BROAD	ST	96	Overhead	Distribution	Luminaire	LUM HPS FLD 400W	Active	400	90435-67003	S14	CITY OF PAWTUCKET

0031	000	3	BROAD	ST	96	Overhead	Distribution	Luminaire	LUM HPS FLD 400W	Active	400	90435-67003	S14	CITY OF PAWTUCKET
0034	000	1	BROAD	ST	96	Overhead	Distribution	Luminaire	LUM HPS RWY 250W	Active	250	90435-67003	S14	CITY OF PAWTUCKET
0035	000	1	BROAD	ST	96	Overhead	Distribution	Luminaire	LUM HPS RWY 250W	Active	250	90435-67003	S14	CITY OF PAWTUCKET
0036	000	1	BROAD	ST	96	Overhead	Distribution	Luminaire	LUM HPS RWY 250W	Active	250	90435-67003	S14	CITY OF PAWTUCKET
0038	000	1	BROAD	ST	96	Overhead	Distribution	Luminaire	LUM HPS RWY 250W	Active	250	90435-67003	S14	CITY OF PAWTUCKET
0001	000	0	BROADWAY	ST	97	Underground	Streetlighting	Pole	POLE METAL =>25FT	Active	0	90435-67003	S14	CITY OF PAWTUCKET
0001	000	1	BROADWAY	ST	97	Underground	Streetlighting	Luminaire	LUM HPS RWY 250W	Active	250	90435-67003	S14	CITY OF PAWTUCKET
0003	000	0	BROADWAY	ST	97	Underground	Streetlighting	Pole	POLE METAL =>25FT	Active	0	90435-67003	S14	CITY OF PAWTUCKET
0003	000	1	BROADWAY	ST	97	Underground	Streetlighting	Luminaire	LUM HPS RWY 250W	Active	250	90435-67003	S14	CITY OF PAWTUCKET
0004	000	0	BROADWAY	ST	97	Underground	Streetlighting	Pole	POLE METAL =>25FT	Active	0	90435-67003	S14	CITY OF PAWTUCKET
0004	000	1	BROADWAY	ST	97	Underground	Streetlighting	Luminaire	LUM HPS RWY 250W	Active	250	90435-67003	S14	CITY OF PAWTUCKET
0005	000	0	BROADWAY	ST	97	Underground	Streetlighting	Pole	POLE METAL =>25FT	Active	0	90435-67003	S14	CITY OF PAWTUCKET
0005	000	1	BROADWAY	ST	97	Underground	Streetlighting	Luminaire	LUM HPS RWY 250W	Active	250	90435-67003	S14	CITY OF PAWTUCKET
0007	000	0	BROADWAY	ST	97	Underground	Streetlighting	Pole	POLE METAL =>25FT	Active	0	90435-67003	S14	CITY OF PAWTUCKET
0007	000	1	BROADWAY	ST	97	Underground	Streetlighting	Luminaire	LUM HPS RWY 250W	Active	250	90435-67003	S14	CITY OF PAWTUCKET
0008	000	1	BROADWAY	ST	97	Overhead	Distribution	Luminaire	LUM HPS RWY 250W	Active	250	90435-67003	S14	CITY OF PAWTUCKET
0009	000	1	BROADWAY	ST	97	Overhead	Distribution	Luminaire	LUM HPS RWY 250W	Active	250	90435-67003	S14	CITY OF PAWTUCKET
0010	084	1	BROADWAY	ST	97	Overhead	Distribution	Luminaire	LUM HPS RWY 250W	Active	250	90435-67003	S14	CITY OF PAWTUCKET
0012	000	1	BROADWAY	ST	97	Overhead	Distribution	Luminaire	LUM HPS RWY 250W	Active	250	90435-67003	S14	CITY OF PAWTUCKET
0013	001	1	BROADWAY	ST	97	Overhead	Distribution	Luminaire	LUM HPS RWY 250W	Active	250	90435-67003	S14	CITY OF PAWTUCKET
0015	000	1	BROADWAY	ST	97	Overhead	Distribution	Luminaire	LUM HPS RWY 250W	Active	250	90435-67003	S14	CITY OF PAWTUCKET
0017	000	1	BROADWAY	ST	97	Overhead	Distribution	Luminaire	LUM HPS RWY 250W	Active	250	90435-67003	S14	CITY OF PAWTUCKET
0019	000	1	BROADWAY	ST	97	Overhead	Distribution	Luminaire	LUM HPS RWY 250W	Active	250	90435-67003	S14	CITY OF PAWTUCKET
0021	000	1	BROADWAY	ST	97	Overhead	Distribution	Luminaire	LUM HPS RWY 250W	Active	250	90435-67003	S14	CITY OF PAWTUCKET
0023	000	1	BROADWAY	ST	97	Overhead	Distribution	Luminaire	LUM HPS RWY 250W	Active	250	90435-67003	S14	CITY OF PAWTUCKET
0026	000	1	BROADWAY	ST	97	Overhead	Distribution	Luminaire	LUM HPS RWY 250W	Active	250	90435-67003	S14	CITY OF PAWTUCKET
0029	000	1	BROADWAY	ST	97	Overhead	Distribution	Luminaire	LUM HPS RWY 250W	Active	250	90435-67003	S14	CITY OF PAWTUCKET
0032	001	1	BROADWAY	ST	97	Overhead	Distribution	Luminaire	LUM HPS RWY 250W	Active	250	90435-67003	S14	CITY OF PAWTUCKET
0033	000	1	BROADWAY	ST	97	Overhead	Distribution	Luminaire	LUM HPS RWY 250W	Active	250	90435-67003	S14	CITY OF PAWTUCKET
0034	000	1	BROADWAY	ST	97	Overhead	Distribution	Luminaire	LUM HPS RWY 250W	Active	250	90435-67003	S14	CITY OF PAWTUCKET
0035	000	1	BROADWAY	ST	97	Overhead	Distribution	Luminaire	LUM HPS RWY 250W	Active	250	90435-67003	S14	CITY OF PAWTUCKET
0036	000	1	BROADWAY	ST	97	Overhead	Distribution	Luminaire	LUM HPS RWY 250W	Active	250	90435-67003	S14	CITY OF PAWTUCKET
0038	000	1	BROADWAY	ST	97	Overhead	Distribution	Luminaire	LUM HPS RWY 250W	Active	250	90435-67003	S14	CITY OF PAWTUCKET
0039	000	1	BROADWAY	ST	97	Overhead	Distribution	Luminaire	LUM HPS RWY 250W	Active	250	90435-67003	S14	CITY OF PAWTUCKET
0040	000	1	BROADWAY	ST	97	Overhead	Distribution	Luminaire	LUM HPS RWY 250W	Active	250	90435-67003	S14	CITY OF PAWTUCKET
0045	000	1	BROADWAY	ST	97	Overhead	Distribution	Luminaire	LUM HPS RWY 250W	Active	250	90435-67003	S14	CITY OF PAWTUCKET
0046	001	1	BROADWAY	ST	97	Overhead	Distribution	Luminaire	LUM HPS RWY 250W	Active	250	90435-67003	S14	CITY OF PAWTUCKET
0048	000	1	BROADWAY	ST	97	Overhead	Distribution	Luminaire	LUM HPS RWY 250W	Active	250	90435-67003	S14	CITY OF PAWTUCKET
0050	001	1	BROADWAY	ST	97	Overhead	Distribution	Luminaire	LUM HPS RWY 250W	Active	250	90435-67003	S14	CITY OF PAWTUCKET
0051	000	1	BROADWAY	ST	97	Overhead	Distribution	Luminaire	LUM HPS RWY 250W	Active	250	90435-67003	S14	CITY OF PAWTUCKET
0052	001	1	BROADWAY	ST	97	Overhead	Distribution	Luminaire	LUM HPS RWY 250W	Active	250	90435-67003	S14	CITY OF PAWTUCKET
0054	000	1	BROADWAY	ST	97	Overhead	Distribution	Luminaire	LUM HPS RWY 250W	Active	250	90435-67003	S14	CITY OF PAWTUCKET
0055	000	1	BROADWAY	ST	97	Overhead	Distribution	Luminaire	LUM HPS RWY 250W	Active	250	90435-67003	S14	CITY OF PAWTUCKET
0056	000	1	BROADWAY	ST	97	Overhead	Distribution	Luminaire	LUM HPS FLD 250W	Active	250	90435-65009	S14	PAWTUCKET SCHOOL DEP
0057	000	1	BROADWAY	ST	97	Overhead	Distribution	Luminaire	LUM HPS FLD 250W	Active	250	90435-65009	S14	PAWTUCKET SCHOOL DEP
0058	000	1	BROADWAY	ST	97	Overhead	Distribution	Luminaire	LUM HPS RWY 250W	Active	250	90435-67003	S14	CITY OF PAWTUCKET
0060	001	1	BROADWAY	ST	97	Overhead	Distribution	Luminaire	LUM HPS RWY 250W	Active	250	90435-67003	S14	CITY OF PAWTUCKET
0061	000	1	BROADWAY	ST	97	Overhead	Distribution	Luminaire	LUM HPS RWY 250W	Active	250	90435-67003	S14	CITY OF PAWTUCKET
0062	000	1	BROADWAY	ST	97	Overhead	Distribution	Luminaire	LUM HPS RWY 250W	Active	250	90435-67003	S14	CITY OF PAWTUCKET
0063	000	1	BROADWAY	ST	97	Overhead	Distribution	Luminaire	LUM HPS RWY 250W	Active	250	90435-67003	S14	CITY OF PAWTUCKET
0064	001	1	BROADWAY	ST	97	Overhead	Distribution	Luminaire	LUM HPS RWY 250W	Active	250	90435-67003	S14	CITY OF PAWTUCKET
0066	000	1	BROADWAY	ST	97	Overhead	Distribution	Luminaire	LUM HPS RWY 250W	Active	250	90435-67003	S14	CITY OF PAWTUCKET
0067	001	1	BROADWAY	ST	97	Overhead	Distribution	Luminaire	LUM HPS RWY 250W	Active	250	90435-67003	S14	CITY OF PAWTUCKET
0068	000	1	BROADWAY	ST	97	Overhead	Distribution	Luminaire	LUM HPS RWY 250W	Active	250	90435-67003	S14	CITY OF PAWTUCKET
0070	000	1	BROADWAY	ST	97	Overhead	Distribution	Luminaire	LUM HPS RWY 250W	Active	250	90435-67003	S14	CITY OF PAWTUCKET
0071	001	1	BROADWAY	ST	97	Overhead	Distribution	Luminaire	LUM HPS RWY 250W	Active	250	90435-67003	S14	CITY OF PAWTUCKET
0073	000	1	BROADWAY	ST	97	Overhead	Distribution	Luminaire	LUM HPS RWY 250W	Active	250	90435-67003	S14	CITY OF PAWTUCKET
0074	000	1	BROADWAY	ST	97	Overhead	Distribution	Luminaire	LUM HPS RWY 250W	Active	250	90435-67003	S14	CITY OF PAWTUCKET
0076	000	1	BROADWAY	ST	97	Overhead	Distribution	Luminaire	LUM HPS RWY 250W	Active	250	90435-67003	S14	CITY OF PAWTUCKET
0077	001	1	BROADWAY	ST	97	Overhead	Distribution	Luminaire	LUM HPS RWY 250W	Active	250	90435-67003	S14	CITY OF PAWTUCKET
0078	000	1	BROADWAY	ST	97	Overhead	Distribution	Luminaire	LUM HPS RWY 250W	Active	250	90435-67003	S14	CITY OF PAWTUCKET
0079	001	1	BROADWAY	ST	97	Overhead	Distribution	Luminaire	LUM HPS RWY 250W	Active	250	90435-67003	S14	CITY OF PAWTUCKET
0080	000	1	BROADWAY	ST	97	Overhead	Distribution	Luminaire	LUM HPS RWY 250W	Active	250	90435-67003	S14	CITY OF PAWTUCKET

0081	001	1	BROADWAY	ST	97	Overhead	Distribution	Luminaire	LUM HPS RWY 250W	Active	250	90435-67003	S14	CITY OF PAWTUCKET
0082	000	1	BROADWAY	ST	97	Overhead	Distribution	Luminaire	LUM HPS RWY 250W	Active	250	90435-67003	S14	CITY OF PAWTUCKET
0083	000	1	BROADWAY	ST	97	Overhead	Distribution	Luminaire	LUM HPS RWY 250W	Active	250	90435-67003	S14	CITY OF PAWTUCKET
0084	001	1	BROADWAY	ST	97	Overhead	Distribution	Luminaire	LUM HPS RWY 250W	Active	250	90435-67003	S14	CITY OF PAWTUCKET
0084	001	2	BROADWAY	ST	97	Overhead	Distribution	Luminaire	LUM HPS RWY 250W	Active	250	90435-67003	S14	CITY OF PAWTUCKET
0085	000	1	BROADWAY	ST	97	Overhead	Distribution	Luminaire	LUM HPS RWY 400W	Active	400	90435-67003	S14	CITY OF PAWTUCKET
0088	000	1	BROADWAY	ST	97	Overhead	Distribution	Luminaire	LUM HPS RWY 250W	Active	250	90435-67003	S14	CITY OF PAWTUCKET
0089	001	1	BROADWAY	ST	97	Overhead	Distribution	Luminaire	LUM HPS RWY 250W	Active	250	90435-67003	S14	CITY OF PAWTUCKET
0091	001	1	BROADWAY	ST	97	Overhead	Distribution	Luminaire	LUM HPS RWY 250W	Active	250	90435-67003	S14	CITY OF PAWTUCKET
0092	000	1	BROADWAY	ST	97	Overhead	Distribution	Luminaire	LUM HPS RWY 250W	Active	250	90435-67003	S14	CITY OF PAWTUCKET
0093	001	1	BROADWAY	ST	97	Overhead	Distribution	Luminaire	LUM HPS RWY 250W	Active	250	90435-67003	S14	CITY OF PAWTUCKET
0094	000	1	BROADWAY	ST	97	Overhead	Distribution	Luminaire	LUM HPS RWY 250W	Active	250	90435-67003	S14	CITY OF PAWTUCKET
0095	001	1	BROADWAY	ST	97	Overhead	Distribution	Luminaire	LUM HPS RWY 250W	Active	250	90435-67003	S14	CITY OF PAWTUCKET
0002	000	1	BROOK	CT	98	Overhead	Distribution	Luminaire	LUM HPS RWY 70W	Active	70	90435-67003	S14	CITY OF PAWTUCKET
0002	000	1	BROOKDALE	BLVD	99	Overhead	Distribution	Luminaire	LUM HPS RWY 70W	Active	70	90435-67003	S14	CITY OF PAWTUCKET
0004	000	1	BROOKDALE	BLVD	99	Overhead	Distribution	Luminaire	LUM HPS RWY 70W	Active	70	90435-67003	S14	CITY OF PAWTUCKET
0006	000	1	BROOKDALE	BLVD	99	Overhead	Distribution	Luminaire	LUM HPS RWY 70W	Active	70	90435-67003	S14	CITY OF PAWTUCKET
0008	000	1	BROOKDALE	BLVD	99	Overhead	Distribution	Luminaire	LUM HPS RWY 70W	Active	70	90435-67003	S14	CITY OF PAWTUCKET
0010	000	1	BROOKDALE	BLVD	99	Overhead	Distribution	Luminaire	LUM HPS RWY 70W	Active	70	90435-67003	S14	CITY OF PAWTUCKET
0011	000	1	BROOKDALE	BLVD	99	Overhead	Distribution	Luminaire	LUM HPS RWY 70W	Active	70	90435-67003	S14	CITY OF PAWTUCKET
0014	000	1	BROOKDALE	BLVD	99	Overhead	Distribution	Luminaire	LUM HPS RWY 70W	Active	70	90435-67003	S14	CITY OF PAWTUCKET
0016	000	1	BROOKDALE	BLVD	99	Overhead	Distribution	Luminaire	LUM HPS RWY 70W	Active	70	90435-67003	S14	CITY OF PAWTUCKET
0001	000	1	BROWN	ST	100	Overhead	Distribution	Luminaire	LUM HPS RWY 100W	Active	100	90435-67003	S14	CITY OF PAWTUCKET
0002	000	1	BROWN	ST	100	Overhead	Distribution	Luminaire	LUM HPS RWY 70W	Active	70	90435-67003	S14	CITY OF PAWTUCKET
0004	000	1	BROWN	ST	100	Overhead	Distribution	Luminaire	LUM HPS RWY 70W	Active	70	90435-67003	S14	CITY OF PAWTUCKET
0005	000	1	BROWN	ST	100	Overhead	Distribution	Luminaire	LUM HPS RWY 70W	Active	70	90435-67003	S14	CITY OF PAWTUCKET
0007	000	1	BROWN	ST	100	Overhead	Distribution	Luminaire	LUM HPS RWY 70W	Active	70	90435-67003	S14	CITY OF PAWTUCKET
0008	000	1	BROWN	ST	100	Overhead	Distribution	Luminaire	LUM HPS RWY 70W	Active	70	90435-67003	S14	CITY OF PAWTUCKET
0009	000	1	BROWN	ST	100	Overhead	Distribution	Luminaire	LUM HPS RWY 70W	Active	70	90435-67003	S14	CITY OF PAWTUCKET
0011	000	1	BROWN	ST	100	Overhead	Distribution	Luminaire	LUM HPS RWY 70W	Active	70	90435-67003	S14	CITY OF PAWTUCKET
0013	000	1	BROWN	ST	100	Overhead	Distribution	Luminaire	LUM HPS RWY 70W	Active	70	90435-67003	S14	CITY OF PAWTUCKET
0014	000	1	BROWN	ST	100	Overhead	Distribution	Luminaire	LUM HPS RWY 70W	Active	70	90435-67003	S14	CITY OF PAWTUCKET
0016	000	1	BROWN	ST	100	Overhead	Distribution	Luminaire	LUM HPS RWY 70W	Active	70	90435-67003	S14	CITY OF PAWTUCKET
0002	000	1	BUCHANAN	ST	101	Overhead	Distribution	Luminaire	LUM HPS RWY 70W	Active	70	90435-67003	S14	CITY OF PAWTUCKET
0005	000	1	BUCHANAN	ST	101	Overhead	Distribution	Luminaire	LUM HPS RWY 70W	Active	70	90435-67003	S14	CITY OF PAWTUCKET
0006	000	1	BUCHANAN	ST	101	Overhead	Distribution	Luminaire	LUM HPS RWY 70W	Active	70	90435-67003	S14	CITY OF PAWTUCKET
0007	000	1	BUCHANAN	ST	101	Overhead	Distribution	Luminaire	LUM HPS RWY 70W	Active	70	90435-67003	S14	CITY OF PAWTUCKET
0009	000	1	BUCHANAN	ST	101	Overhead	Distribution	Luminaire	LUM HPS RWY 70W	Active	70	90435-67003	S14	CITY OF PAWTUCKET
0011	000	1	BUCHANAN	ST	101	Overhead	Distribution	Luminaire	LUM HPS RWY 70W	Active	70	90435-67003	S14	CITY OF PAWTUCKET
0012	000	1	BUCHANAN	ST	101	Overhead	Distribution	Luminaire	LUM HPS RWY 70W	Active	70	90435-67003	S14	CITY OF PAWTUCKET
0001	000	1	BUCKLIN	ST	102	Overhead	Distribution	Luminaire	LUM HPS RWY 70W	Active	70	90435-67003	S14	CITY OF PAWTUCKET
0003	000	1	BUCKLIN	ST	102	Overhead	Distribution	Luminaire	LUM HPS RWY 70W	Active	70	90435-67003	S14	CITY OF PAWTUCKET
0005	000	1	BUCKLIN	ST	102	Overhead	Distribution	Luminaire	LUM HPS RWY 70W	Active	70	90435-67003	S14	CITY OF PAWTUCKET
0007	000	1	BUCKLIN	ST	102	Overhead	Distribution	Luminaire	LUM HPS RWY 70W	Active	70	90435-67003	S14	CITY OF PAWTUCKET
0009	000	1	BUCKLIN	ST	102	Overhead	Distribution	Luminaire	LUM HPS RWY 70W	Active	70	90435-67003	S14	CITY OF PAWTUCKET
0011	000	1	BUCKLIN	ST	102	Overhead	Distribution	Luminaire	LUM HPS RWY 70W	Active	70	90435-67003	S14	CITY OF PAWTUCKET
0013	000	1	BUCKLIN	ST	102	Overhead	Distribution	Luminaire	LUM HPS RWY 70W	Active	70	90435-67003	S14	CITY OF PAWTUCKET
0014	000	1	BUCKLIN	ST	102	Overhead	Distribution	Luminaire	LUM HPS RWY 70W	Active	70	90435-67003	S14	CITY OF PAWTUCKET
0016	000	1	BUCKLIN	ST	102	Overhead	Distribution	Luminaire	LUM HPS RWY 70W	Active	70	90435-67003	S14	CITY OF PAWTUCKET
0018	000	1	BUCKLIN	ST	102	Overhead	Distribution	Luminaire	LUM HPS RWY 70W	Active	70	90435-67003	S14	CITY OF PAWTUCKET
0020	000	1	BUCKLIN	ST	102	Overhead	Distribution	Luminaire	LUM HPS RWY 100W	Active	100	90435-67003	S14	CITY OF PAWTUCKET
0022	000	1	BUCKLIN	ST	102	Overhead	Distribution	Luminaire	LUM HPS RWY 70W	Active	70	90435-67003	S14	CITY OF PAWTUCKET
0024	000	1	BUCKLIN	ST	102	Overhead	Distribution	Luminaire	LUM HPS RWY 70W	Active	70	90435-67003	S14	CITY OF PAWTUCKET
0026	000	1	BUCKLIN	ST	102	Overhead	Distribution	Luminaire	LUM HPS RWY 70W	Active	70	90435-67003	S14	CITY OF PAWTUCKET
0003	000	1	BUFFUM	ST	103	Overhead	Distribution	Luminaire	LUM HPS RWY 70W	Active	70	90435-67003	S14	CITY OF PAWTUCKET
0005	000	1	BUFFUM	ST	103	Overhead	Distribution	Luminaire	LUM HPS RWY 70W	Active	70	90435-67003	S14	CITY OF PAWTUCKET
0007	000	1	BUFFUM	ST	103	Overhead	Distribution	Luminaire	LUM HPS RWY 70W	Active	70	90435-67003	S14	CITY OF PAWTUCKET
0004	000	1	BULLOCK	ST	104	Overhead	Distribution	Luminaire	LUM HPS RWY 100W	Active	100	90435-67003	S14	CITY OF PAWTUCKET
0005	001	1	BULLOCK	ST	104	Overhead	Distribution	Luminaire	LUM HPS RWY 70W	Active	70	90435-67003	S14	CITY OF PAWTUCKET
0010	000	1	BULLOCK	ST	104	Overhead	Distribution	Luminaire	LUM HPS RWY 70W	Active	70	90435-67003	S14	CITY OF PAWTUCKET
0002	000	1	BURGESS	AVE	105	Overhead	Distribution	Luminaire	LUM HPS RWY 100W	Active	100	90435-67003	S14	CITY OF PAWTUCKET
0005	000	1	BURGESS	AVE	105	Overhead	Distribution	Luminaire	LUM HPS RWY 70W	Active	70	90435-67003	S14	CITY OF PAWTUCKET
0007	000	1	BURGESS	AVE	105	Overhead	Distribution	Luminaire	LUM HPS RWY 70W	Active	70	90435-67003	S14	CITY OF PAWTUCKET

0008	000	1	BURGESS	AVE	105	Overhead	Distribution	Luminaire	LUM HPS RWY 70W	Active	70	90435-67003	S14	CITY OF PAWTUCKET
0010	000	1	BURGESS	AVE	105	Overhead	Distribution	Luminaire	LUM HPS RWY 70W	Active	70	90435-67003	S14	CITY OF PAWTUCKET
0012	000	1	BURGESS	AVE	105	Overhead	Distribution	Luminaire	LUM HPS RWY 70W	Active	70	90435-67003	S14	CITY OF PAWTUCKET
0014	000	1	BURGESS	AVE	105	Overhead	Distribution	Luminaire	LUM HPS RWY 70W	Active	70	90435-67003	S14	CITY OF PAWTUCKET
0015	000	1	BURGESS	AVE	105	Overhead	Distribution	Luminaire	LUM HPS RWY 70W	Active	70	90435-67003	S14	CITY OF PAWTUCKET
0017	000	1	BURGESS	AVE	105	Overhead	Distribution	Luminaire	LUM HPS RWY 70W	Active	70	90435-67003	S14	CITY OF PAWTUCKET
0018	000	1	BURGESS	AVE	105	Overhead	Distribution	Luminaire	LUM HPS RWY 70W	Active	70	90435-67003	S14	CITY OF PAWTUCKET
0020	000	1	BURGESS	AVE	105	Overhead	Distribution	Luminaire	LUM HPS RWY 70W	Active	70	90435-67003	S14	CITY OF PAWTUCKET
0022	000	1	BURGESS	AVE	105	Overhead	Distribution	Luminaire	LUM HPS RWY 70W	Active	70	90435-67003	S14	CITY OF PAWTUCKET
0002	000	1	BURKE	ST	106	Overhead	Distribution	Luminaire	LUM HPS RWY 70W	Active	70	90435-67003	S14	CITY OF PAWTUCKET
0002	000	1	BUSBY	ST	107	Overhead	Distribution	Luminaire	LUM HPS RWY 100W	Active	100	90435-67003	S14	CITY OF PAWTUCKET
0004	000	1	BUSBY	ST	107	Overhead	Distribution	Luminaire	LUM HPS RWY 70W	Active	70	90435-67003	S14	CITY OF PAWTUCKET
0001	000	1	BYRON	AVE	108	Overhead	Distribution	Luminaire	LUM HPS RWY 70W	Active	70	90435-67003	S14	CITY OF PAWTUCKET
0002	000	1	BYRON	AVE	108	Overhead	Distribution	Luminaire	LUM HPS RWY 70W	Active	70	90435-67003	S14	CITY OF PAWTUCKET
0004	000	1	BYRON	AVE	108	Overhead	Distribution	Luminaire	LUM HPS RWY 70W	Active	70	90435-67003	S14	CITY OF PAWTUCKET
0005	000	1	BYRON	AVE	108	Overhead	Distribution	Luminaire	LUM HPS RWY 70W	Active	70	90435-67003	S14	CITY OF PAWTUCKET
0006	000	1	BYRON	AVE	108	Overhead	Distribution	Luminaire	LUM HPS RWY 70W	Active	70	90435-67003	S14	CITY OF PAWTUCKET
0008	000	1	BYRON	AVE	108	Overhead	Distribution	Luminaire	LUM HPS RWY 70W	Active	70	90435-67003	S14	CITY OF PAWTUCKET
0010	000	1	BYRON	AVE	108	Overhead	Distribution	Luminaire	LUM HPS RWY 70W	Active	70	90435-67003	S14	CITY OF PAWTUCKET
0001	000	1	CALA	DR	109	Overhead	Distribution	Luminaire	LUM HPS RWY 70W	Active	70	90435-67003	S14	CITY OF PAWTUCKET
0002	000	1	CALDER	ST	110	Overhead	Distribution	Luminaire	LUM HPS RWY 70W	Active	70	90435-67003	S14	CITY OF PAWTUCKET
0003	000	1	CALDER	ST	110	Overhead	Distribution	Luminaire	LUM HPS RWY 50W	Active	50	90435-67003	S14	CITY OF PAWTUCKET
0004	000	1	CALDER	ST	110	Overhead	Distribution	Luminaire	LUM HPS RWY 70W	Active	70	90435-67003	S14	CITY OF PAWTUCKET
0006	000	1	CALDER	ST	110	Overhead	Distribution	Luminaire	LUM HPS RWY 70W	Active	70	90435-67003	S14	CITY OF PAWTUCKET
0009	000	1	CALDER	ST	110	Overhead	Distribution	Luminaire	LUM HPS RWY 70W	Active	70	90435-67003	S14	CITY OF PAWTUCKET
0011	000	1	CALDER	ST	110	Overhead	Distribution	Luminaire	LUM HPS RWY 70W	Active	70	90435-67003	S14	CITY OF PAWTUCKET
0013	000	1	CALDER	ST	110	Overhead	Distribution	Luminaire	LUM HPS RWY 70W	Active	70	90435-67003	S14	CITY OF PAWTUCKET
0002	000	1	CAMAC	ST	111	Overhead	Distribution	Luminaire	LUM HPS RWY 70W	Active	70	90435-67003	S14	CITY OF PAWTUCKET
0005	000	1	CAMAC	ST	111	Overhead	Distribution	Luminaire	LUM HPS RWY 70W	Active	70	90435-67003	S14	CITY OF PAWTUCKET
0002	000	1	CAMBRIA	CT	112	Overhead	Distribution	Luminaire	LUM HPS RWY 70W	Active	70	90435-67003	S14	CITY OF PAWTUCKET
0004	000	1	CAMBRIA	CT	112	Overhead	Distribution	Luminaire	LUM HPS RWY 70W	Active	70	90435-67003	S14	CITY OF PAWTUCKET
0005	000	1	CAMBRIA	CT	112	Overhead	Distribution	Luminaire	LUM HPS RWY 70W	Active	70	90435-67003	S14	CITY OF PAWTUCKET
0006	000	1	CAMBRIA	CT	112	Overhead	Distribution	Luminaire	LUM HPS RWY 70W	Active	70	90435-67003	S14	CITY OF PAWTUCKET
0008	000	1	CAMBRIA	CT	112	Overhead	Distribution	Luminaire	LUM HPS RWY 70W	Active	70	90435-67003	S14	CITY OF PAWTUCKET
0010	000	1	CAMBRIA	CT	112	Overhead	Distribution	Luminaire	LUM HPS RWY 70W	Active	70	90435-67003	S14	CITY OF PAWTUCKET
0012	000	1	CAMBRIA	CT	112	Overhead	Distribution	Luminaire	LUM HPS RWY 70W	Active	70	90435-67003	S14	CITY OF PAWTUCKET
0014	000	1	CAMBRIA	CT	112	Overhead	Distribution	Luminaire	LUM HPS RWY 70W	Active	70	90435-67003	S14	CITY OF PAWTUCKET
0016	000	1	CAMBRIA	CT	112	Overhead	Distribution	Luminaire	LUM HPS RWY 70W	Active	70	90435-67003	S14	CITY OF PAWTUCKET
0002	000	1	CAMERON	ST	113	Overhead	Distribution	Luminaire	LUM HPS RWY 70W	Active	70	90435-67003	S14	CITY OF PAWTUCKET
0004	000	1	CAMERON	ST	113	Overhead	Distribution	Luminaire	LUM HPS RWY 70W	Active	70	90435-67003	S14	CITY OF PAWTUCKET
0006	000	1	CAMERON	ST	113	Overhead	Distribution	Luminaire	LUM HPS RWY 70W	Active	70	90435-67003	S14	CITY OF PAWTUCKET
0007	001	1	CAMERON	ST	113	Overhead	Distribution	Luminaire	LUM HPS RWY 70W	Active	70	90435-67003	S14	CITY OF PAWTUCKET
0009	000	1	CAMERON	ST	113	Overhead	Distribution	Luminaire	LUM HPS RWY 70W	Active	70	90435-67003	S14	CITY OF PAWTUCKET
0011	000	1	CAMERON	ST	113	Overhead	Distribution	Luminaire	LUM HPS RWY 70W	Active	70	90435-67003	S14	CITY OF PAWTUCKET
0014	000	1	CAMERON	ST	113	Overhead	Distribution	Luminaire	LUM HPS RWY 70W	Active	70	90435-67003	S14	CITY OF PAWTUCKET
0016	000	1	CAMERON	ST	113	Overhead	Distribution	Luminaire	LUM HPS RWY 70W	Active	70	90435-67003	S14	CITY OF PAWTUCKET
0018	000	1	CAMERON	ST	113	Overhead	Distribution	Luminaire	LUM HPS RWY 70W	Active	70	90435-67003	S14	CITY OF PAWTUCKET
0002	000	1	CAMPBELL	TER	115	Overhead	Distribution	Luminaire	LUM HPS RWY 70W	Active	70	90435-67003	S14	CITY OF PAWTUCKET
0003	000	1	CAMPBELL	ST	114	Overhead	Distribution	Luminaire	LUM HPS RWY 100W	Active	100	90435-67003	S14	CITY OF PAWTUCKET
0003	030	1	CAMPBELL	ST	114	Overhead	Distribution	Luminaire	LUM HPS RWY 100W	Active	100	90435-67003	S14	CITY OF PAWTUCKET
0004	000	1	CAMPBELL	ST	114	Overhead	Distribution	Luminaire	LUM HPS RWY 100W	Active	100	90435-67003	S14	CITY OF PAWTUCKET
0004	000	1	CAMPBELL	TER	115	Overhead	Distribution	Luminaire	LUM HPS RWY 70W	Active	70	90435-67003	S14	CITY OF PAWTUCKET
0006	000	1	CAMPBELL	ST	114	Overhead	Distribution	Luminaire	LUM HPS RWY 70W	Active	70	90435-67003	S14	CITY OF PAWTUCKET
0006	000	1	CAMPBELL	TER	115	Overhead	Distribution	Luminaire	LUM HPS RWY 70W	Active	70	90435-67003	S14	CITY OF PAWTUCKET
0008	000	1	CAMPBELL	ST	114	Overhead	Distribution	Luminaire	LUM HPS RWY 70W	Active	70	90435-67003	S14	CITY OF PAWTUCKET
0009	000	1	CAMPBELL	ST	114	Overhead	Distribution	Luminaire	LUM HPS RWY 70W	Active	70	90435-67003	S14	CITY OF PAWTUCKET
0010	000	1	CAMPBELL	ST	114	Overhead	Distribution	Luminaire	LUM HPS RWY 70W	Active	70	90435-67003	S14	CITY OF PAWTUCKET
0011	000	1	CAMPBELL	ST	114	Overhead	Distribution	Luminaire	LUM HPS RWY 70W	Active	70	90435-67003	S14	CITY OF PAWTUCKET
0013	000	1	CAMPBELL	ST	114	Overhead	Distribution	Luminaire	LUM HPS RWY 70W	Active	70	90435-67003	S14	CITY OF PAWTUCKET
0015	000	1	CAMPBELL	ST	114	Overhead	Distribution	Luminaire	LUM HPS RWY 70W	Active	70	90435-67003	S14	CITY OF PAWTUCKET
0017	000	1	CAMPBELL	ST	114	Overhead	Distribution	Luminaire	LUM HPS RWY 70W	Active	70	90435-67003	S14	CITY OF PAWTUCKET
0018	000	1	CAMPBELL	ST	114	Overhead	Distribution	Luminaire	LUM HPS RWY 70W	Active	70	90435-67003	S14	CITY OF PAWTUCKET
0020	000	1	CAMPBELL	ST	114	Overhead	Distribution	Luminaire	LUM HPS RWY 70W	Active	70	90435-67003	S14	CITY OF PAWTUCKET

0002	000	1	CAPITAL	ST	117	Overhead	Distribution	Luminaire	LUM HPS RWY 70W	Active	70	90435-67003	S14	CITY OF PAWTUCKET
0004	000	1	CAPITAL	ST	117	Overhead	Distribution	Luminaire	LUM HPS RWY 70W	Active	70	90435-67003	S14	CITY OF PAWTUCKET
0005	000	1	CAPITAL	ST	117	Overhead	Distribution	Luminaire	LUM HPS RWY 70W	Active	70	90435-67003	S14	CITY OF PAWTUCKET
0007	000	1	CAPITAL	ST	117	Overhead	Distribution	Luminaire	LUM HPS RWY 70W	Active	70	90435-67003	S14	CITY OF PAWTUCKET
0010	000	1	CAPITAL	ST	117	Overhead	Distribution	Luminaire	LUM HPS RWY 70W	Active	70	90435-67003	S14	CITY OF PAWTUCKET
0011	000	1	CAPITAL	ST	117	Overhead	Distribution	Luminaire	LUM HPS RWY 70W	Active	70	90435-67003	S14	CITY OF PAWTUCKET
0012	000	1	CAPITAL	ST	117	Overhead	Distribution	Luminaire	LUM HPS RWY 70W	Active	70	90435-67003	S14	CITY OF PAWTUCKET
0014	000	1	CAPITAL	ST	117	Overhead	Distribution	Luminaire	LUM HPS RWY 70W	Active	70	90435-67003	S14	CITY OF PAWTUCKET
0002	000	1	CAPWELL	AVE	118	Overhead	Distribution	Luminaire	LUM HPS RWY 70W	Active	70	90435-67003	S14	CITY OF PAWTUCKET
0003	000	1	CAPWELL	AVE	118	Overhead	Distribution	Luminaire	LUM HPS RWY 70W	Active	70	90435-67003	S14	CITY OF PAWTUCKET
0005	000	1	CAPWELL	AVE	118	Overhead	Distribution	Luminaire	LUM HPS RWY 70W	Active	70	90435-67003	S14	CITY OF PAWTUCKET
0006	000	1	CAPWELL	AVE	118	Overhead	Distribution	Luminaire	LUM HPS RWY 70W	Active	70	90435-67003	S14	CITY OF PAWTUCKET
0007	000	1	CAPWELL	AVE	118	Overhead	Distribution	Luminaire	LUM HPS RWY 70W	Active	70	90435-67003	S14	CITY OF PAWTUCKET
0008	000	1	CAPWELL	AVE	118	Overhead	Distribution	Luminaire	LUM HPS RWY 70W	Active	70	90435-67003	S14	CITY OF PAWTUCKET
0001	000	1	CARDOSI	CT	119	Overhead	Distribution	Luminaire	LUM HPS RWY 70W	Active	70	90435-67003	S14	CITY OF PAWTUCKET
0004	000	1	CARDOSI	CT	119	Overhead	Distribution	Luminaire	LUM HPS RWY 70W	Active	70	90435-67003	S14	CITY OF PAWTUCKET
0004	000	1	CARNATION	ST	120	Overhead	Distribution	Luminaire	LUM HPS RWY 70W	Active	70	90435-67003	S14	CITY OF PAWTUCKET
0006	000	1	CARNATION	ST	120	Overhead	Distribution	Luminaire	LUM HPS RWY 70W	Active	70	90435-67003	S14	CITY OF PAWTUCKET
0013	000	1	CARNATION	ST	120	Overhead	Distribution	Luminaire	LUM HPS RWY 70W	Active	70	90435-67003	S14	CITY OF PAWTUCKET
0014	000	1	CARNATION	ST	120	Overhead	Distribution	Luminaire	LUM HPS RWY 70W	Active	70	90435-67003	S14	CITY OF PAWTUCKET
0016	000	1	CARNATION	ST	120	Overhead	Distribution	Luminaire	LUM HPS RWY 70W	Active	70	90435-67003	S14	CITY OF PAWTUCKET
0018	000	1	CARNATION	ST	120	Overhead	Distribution	Luminaire	LUM HPS RWY 70W	Active	70	90435-67003	S14	CITY OF PAWTUCKET
0018	000	2	CARNATION	ST	120	Overhead	Distribution	Luminaire	LUM HPS FLD 400W	Active	400	90435-67003	S14	CITY OF PAWTUCKET
0019	000	1	CARNATION	ST	120	Overhead	Distribution	Luminaire	LUM HPS RWY 70W	Active	70	90435-67003	S14	CITY OF PAWTUCKET
0021	000	1	CARNATION	ST	120	Overhead	Distribution	Luminaire	LUM HPS RWY 250W	Active	250	90435-67003	S14	CITY OF PAWTUCKET
0023	000	1	CARNATION	ST	120	Overhead	Distribution	Luminaire	LUM HPS RWY 70W	Active	70	90435-67003	S14	CITY OF PAWTUCKET
0023	000	2	CARNATION	ST	120	Overhead	Distribution	Luminaire	LUM HPS FLD 250W	Active	250	90435-65009	S14	PAWTUCKET SCHOOL DEP
0024	000	1	CARNATION	ST	120	Overhead	Distribution	Luminaire	LUM HPS FLD 250W	Active	250	90435-65009	S14	PAWTUCKET SCHOOL DEP
0025	000	1	CARNATION	ST	120	Overhead	Distribution	Luminaire	LUM HPS RWY 100W	Active	100	90435-67003	S14	CITY OF PAWTUCKET
0027	000	1	CARNATION	ST	120	Overhead	Distribution	Luminaire	LUM HPS RWY 70W	Active	70	90435-67003	S14	CITY OF PAWTUCKET
0029	000	1	CARNATION	ST	120	Overhead	Distribution	Luminaire	LUM HPS RWY 70W	Active	70	90435-67003	S14	CITY OF PAWTUCKET
0001	000	1	CARPENTER	ST	121	Overhead	Distribution	Luminaire	LUM HPS RWY 100W	Active	100	90435-67003	S14	CITY OF PAWTUCKET
0002	000	1	CARPENTER	ST	121	Overhead	Distribution	Luminaire	LUM HPS RWY 70W	Active	70	90435-67003	S14	CITY OF PAWTUCKET
0005	000	1	CARPENTER	ST	121	Overhead	Distribution	Luminaire	LUM HPS RWY 70W	Active	70	90435-67003	S14	CITY OF PAWTUCKET
0007	000	1	CARPENTER	ST	121	Overhead	Distribution	Luminaire	LUM HPS RWY 70W	Active	70	90435-67003	S14	CITY OF PAWTUCKET
0009	000	1	CARPENTER	ST	121	Overhead	Distribution	Luminaire	LUM HPS RWY 70W	Active	70	90435-67003	S14	CITY OF PAWTUCKET
0002	000	1	CARSON	ST	122	Overhead	Distribution	Luminaire	LUM HPS RWY 70W	Active	70	90435-67003	S14	CITY OF PAWTUCKET
0004	000	1	CARSON	ST	122	Overhead	Distribution	Luminaire	LUM HPS RWY 70W	Active	70	90435-67003	S14	CITY OF PAWTUCKET
0003	000	1	CARTER	AVE	123	Overhead	Distribution	Luminaire	LUM HPS RWY 70W	Active	70	90435-67003	S14	CITY OF PAWTUCKET
0004	000	1	CARTER	AVE	123	Overhead	Distribution	Luminaire	LUM HPS RWY 70W	Active	70	90435-67003	S14	CITY OF PAWTUCKET
0007	000	1	CARTER	AVE	123	Overhead	Distribution	Luminaire	LUM HPS RWY 70W	Active	70	90435-67003	S14	CITY OF PAWTUCKET
0010	000	1	CARTER	AVE	123	Overhead	Distribution	Luminaire	LUM HPS RWY 70W	Active	70	90435-67003	S14	CITY OF PAWTUCKET
0012	000	1	CARTER	AVE	123	Overhead	Distribution	Luminaire	LUM HPS RWY 70W	Active	70	90435-67003	S14	CITY OF PAWTUCKET
0013	000	1	CARTER	AVE	123	Overhead	Distribution	Luminaire	LUM HPS RWY 70W	Active	70	90435-67003	S14	CITY OF PAWTUCKET
0014	000	1	CARTER	AVE	123	Overhead	Distribution	Luminaire	LUM HPS RWY 70W	Active	70	90435-67003	S14	CITY OF PAWTUCKET
0015	000	1	CARTER	AVE	123	Overhead	Distribution	Luminaire	LUM HPS RWY 70W	Active	70	90435-67003	S14	CITY OF PAWTUCKET
0018	000	1	CARTER	AVE	123	Overhead	Distribution	Luminaire	LUM HPS RWY 70W	Active	70	90435-67003	S14	CITY OF PAWTUCKET
0019	000	1	CARTER	AVE	123	Overhead	Distribution	Luminaire	LUM HPS RWY 70W	Active	70	90435-67003	S14	CITY OF PAWTUCKET
0021	000	1	CARTER	AVE	123	Overhead	Distribution	Luminaire	LUM HPS RWY 70W	Active	70	90435-67003	S14	CITY OF PAWTUCKET
0022	000	1	CARTER	AVE	123	Overhead	Distribution	Luminaire	LUM HPS RWY 70W	Active	70	90435-67003	S14	CITY OF PAWTUCKET
0024	000	1	CARTER	AVE	123	Overhead	Distribution	Luminaire	LUM HPS RWY 70W	Active	70	90435-67003	S14	CITY OF PAWTUCKET
0026	000	1	CARTER	AVE	123	Overhead	Distribution	Luminaire	LUM HPS RWY 70W	Active	70	90435-67003	S14	CITY OF PAWTUCKET
0028	000	1	CARTER	AVE	123	Overhead	Distribution	Luminaire	LUM HPS FLD 400W	Active	400	65507-94008	S14	PAWTUCKET SCHOOL DEP
0028	000	2	CARTER	AVE	123	Overhead	Distribution	Luminaire	LUM HPS RWY 70W	Active	70	90435-67003	S14	CITY OF PAWTUCKET
0032	000	1	CARTER	AVE	123	Overhead	Distribution	Luminaire	LUM HPS RWY 100W	Active	100	90435-67003	S14	CITY OF PAWTUCKET
0033	000	1	CARTER	AVE	123	Overhead	Distribution	Luminaire	LUM HPS FLD 400W	Active	400	53045-39003	S14	PAWTUCKET SCHOOL DEP
0034	000	1	CARTER	AVE	123	Overhead	Distribution	Luminaire	LUM HPS FLD 400W	Active	400	53045-39003	S14	PAWTUCKET SCHOOL DEP
0034	000	2	CARTER	AVE	123	Overhead	Distribution	Luminaire	LUM HPS RWY 100W	Active	100	90435-67003	S14	CITY OF PAWTUCKET
0036	000	1	CARTER	AVE	123	Overhead	Distribution	Luminaire	LUM HPS RWY 100W	Active	100	90435-67003	S14	CITY OF PAWTUCKET
0038	000	1	CARTER	AVE	123	Overhead	Distribution	Luminaire	LUM HPS RWY 100W	Active	100	90435-67003	S14	CITY OF PAWTUCKET
0042	000	1	CARTER	AVE	123	Overhead	Distribution	Luminaire	LUM HPS RWY 70W	Active	70	90435-67003	S14	CITY OF PAWTUCKET
0044	000	1	CARTER	AVE	123	Overhead	Distribution	Luminaire	LUM HPS RWY 70W	Active	70	90435-67003	S14	CITY OF PAWTUCKET
0046	000	1	CARTER	AVE	123	Overhead	Distribution	Luminaire	LUM HPS RWY 100W	Active	100	90435-67003	S14	CITY OF PAWTUCKET

0047	000	1	CARTER	AVE	123	Overhead	Distribution	Luminaire	LUM HPS RWY 50W	Active	50	90435-67003	S14	CITY OF PAWTUCKET
0048	000	1	CARTER	AVE	123	Overhead	Distribution	Luminaire	LUM HPS RWY 70W	Active	70	90435-67003	S14	CITY OF PAWTUCKET
0049	000	1	CARTER	AVE	123	Overhead	Distribution	Luminaire	LUM HPS RWY 70W	Active	70	90435-67003	S14	CITY OF PAWTUCKET
0050	000	1	CARTER	AVE	123	Overhead	Distribution	Luminaire	LUM HPS RWY 70W	Active	70	90435-67003	S14	CITY OF PAWTUCKET
0051	000	1	CARTER	AVE	123	Overhead	Distribution	Luminaire	LUM HPS RWY 70W	Active	70	90435-67003	S14	CITY OF PAWTUCKET
0003	000	1	CARVER	ST	124	Overhead	Distribution	Luminaire	LUM HPS RWY 70W	Active	70	90435-67003	S14	CITY OF PAWTUCKET
0005	000	1	CARVER	ST	124	Overhead	Distribution	Luminaire	LUM HPS RWY 70W	Active	70	90435-67003	S14	CITY OF PAWTUCKET
0009	001	1	CARVER	ST	124	Overhead	Distribution	Luminaire	LUM HPS RWY 70W	Active	70	90435-67003	S14	CITY OF PAWTUCKET
0010	001	1	CARVER	ST	124	Overhead	Distribution	Luminaire	LUM HPS RWY 70W	Active	70	90435-67003	S14	CITY OF PAWTUCKET
0011	001	1	CARVER	ST	124	Overhead	Distribution	Luminaire	LUM HPS RWY 70W	Active	70	90435-67003	S14	CITY OF PAWTUCKET
0001	000	1	CATHERINE	ST	125	Overhead	Distribution	Luminaire	LUM HPS RWY 70W	Active	70	90435-67003	S14	CITY OF PAWTUCKET
0004	000	1	CATO	ST	126	Overhead	Distribution	Luminaire	LUM HPS RWY 70W	Active	70	90435-67003	S14	CITY OF PAWTUCKET
0006	000	1	CATO	ST	126	Overhead	Distribution	Luminaire	LUM HPS RWY 70W	Active	70	90435-67003	S14	CITY OF PAWTUCKET
0003	000	1	CEDAR	ST	127	Overhead	Distribution	Luminaire	LUM HPS RWY 250W	Active	250	90435-67003	S14	CITY OF PAWTUCKET
0004	000	1	CEDAR	ST	127	Overhead	Distribution	Luminaire	LUM HPS RWY 250W	Active	250	90435-67003	S14	CITY OF PAWTUCKET
0008	000	1	CEDAR	ST	127	Overhead	Distribution	Luminaire	LUM HPS RWY 70W	Active	70	90435-67003	S14	CITY OF PAWTUCKET
0010	000	1	CEDAR	ST	127	Overhead	Distribution	Luminaire	LUM HPS RWY 70W	Active	70	90435-67003	S14	CITY OF PAWTUCKET
0011	000	1	CEDAR	ST	127	Overhead	Distribution	Luminaire	LUM HPS RWY 70W	Active	70	90435-67003	S14	CITY OF PAWTUCKET
0013	000	1	CEDAR	ST	127	Overhead	Distribution	Luminaire	LUM HPS RWY 70W	Active	70	90435-67003	S14	CITY OF PAWTUCKET
0015	000	1	CEDAR	ST	127	Overhead	Distribution	Luminaire	LUM HPS RWY 70W	Active	70	90435-67003	S14	CITY OF PAWTUCKET
0016	000	1	CEDAR	ST	127	Overhead	Distribution	Luminaire	LUM HPS RWY 70W	Active	70	90435-67003	S14	CITY OF PAWTUCKET
0018	000	1	CEDAR	ST	127	Overhead	Distribution	Luminaire	LUM HPS RWY 70W	Active	70	90435-67003	S14	CITY OF PAWTUCKET
0019	000	1	CEDAR	ST	127	Overhead	Distribution	Luminaire	LUM HPS RWY 100W	Active	100	90435-67003	S14	CITY OF PAWTUCKET
0021	000	1	CEDAR	ST	127	Overhead	Distribution	Luminaire	LUM HPS RWY 70W	Active	70	90435-67003	S14	CITY OF PAWTUCKET
0002	000	1	CEDARBROOK	RD	128	Overhead	Distribution	Luminaire	LUM HPS RWY 70W	Active	70	90435-67003	S14	CITY OF PAWTUCKET
0003	000	1	CEDARBROOK	RD	128	Overhead	Distribution	Luminaire	LUM HPS RWY 70W	Active	70	90435-67003	S14	CITY OF PAWTUCKET
0004	000	1	CEDARBROOK	RD	128	Overhead	Distribution	Luminaire	LUM HPS RWY 70W	Active	70	90435-67003	S14	CITY OF PAWTUCKET
0006	000	1	CEDARBROOK	RD	128	Overhead	Distribution	Luminaire	LUM HPS RWY 70W	Active	70	90435-67003	S14	CITY OF PAWTUCKET
0001	000	1	CEDARCREST	DR	129	Overhead	Distribution	Luminaire	LUM HPS RWY 70W	Active	70	90435-67003	S14	CITY OF PAWTUCKET
0003	000	1	CEDARCREST	DR	129	Overhead	Distribution	Luminaire	LUM HPS RWY 70W	Active	70	90435-67003	S14	CITY OF PAWTUCKET
0005	000	1	CEDARCREST	DR	129	Overhead	Distribution	Luminaire	LUM HPS RWY 70W	Active	70	90435-67003	S14	CITY OF PAWTUCKET
0002	000	1	CENTRAL	AVE	130	Overhead	Distribution	Luminaire	LUM HPS RWY 100W	Active	100	90435-67003	S14	CITY OF PAWTUCKET
0004	000	1	CENTRAL	AVE	130	Overhead	Distribution	Luminaire	LUM HPS RWY 100W	Active	100	90435-67003	S14	CITY OF PAWTUCKET
0005	000	1	CENTRAL	AVE	130	Overhead	Distribution	Luminaire	LUM HPS RWY 100W	Active	100	90435-67003	S14	CITY OF PAWTUCKET
0007	000	1	CENTRAL	AVE	130	Overhead	Distribution	Luminaire	LUM HPS RWY 250W	Active	250	90435-67003	S14	CITY OF PAWTUCKET
0008	000	1	CENTRAL	AVE	130	Overhead	Distribution	Luminaire	LUM HPS RWY 250W	Active	250	90435-67003	S14	CITY OF PAWTUCKET
0011	001	1	CENTRAL	AVE	130	Overhead	Distribution	Luminaire	LUM HPS RWY 250W	Active	250	90435-67003	S14	CITY OF PAWTUCKET
0012	001	1	CENTRAL	AVE	130	Overhead	Distribution	Luminaire	LUM HPS RWY 250W	Active	250	90435-67003	S14	CITY OF PAWTUCKET
0014	001	1	CENTRAL	AVE	130	Overhead	Distribution	Luminaire	LUM HPS RWY 250W	Active	250	90435-67003	S14	CITY OF PAWTUCKET
0015	000	1	CENTRAL	AVE	130	Overhead	Distribution	Luminaire	LUM HPS RWY 250W	Active	250	90435-67003	S14	CITY OF PAWTUCKET
0015	001	1	CENTRAL	AVE	130	Overhead	Distribution	Luminaire	LUM HPS RWY 250W	Active	250	90435-67003	S14	CITY OF PAWTUCKET
0015	003	1	CENTRAL	AVE	130	Overhead	Distribution	Luminaire	LUM HPS RWY 100W	Active	100	90435-67003	S14	CITY OF PAWTUCKET
0018	000	1	CENTRAL	AVE	130	Overhead	Distribution	Luminaire	LUM HPS RWY 100W	Active	100	90435-67003	S14	CITY OF PAWTUCKET
0020	000	1	CENTRAL	AVE	130	Overhead	Distribution	Luminaire	LUM HPS RWY 70W	Active	70	90435-67003	S14	CITY OF PAWTUCKET
0022	000	1	CENTRAL	AVE	130	Overhead	Distribution	Luminaire	LUM HPS RWY 100W	Active	100	90435-67003	S14	CITY OF PAWTUCKET
0024	000	1	CENTRAL	AVE	130	Overhead	Distribution	Luminaire	LUM HPS RWY 100W	Active	100	90435-67003	S14	CITY OF PAWTUCKET
0026	000	1	CENTRAL	AVE	130	Overhead	Distribution	Luminaire	LUM HPS RWY 100W	Active	100	90435-67003	S14	CITY OF PAWTUCKET
0028	000	1	CENTRAL	AVE	130	Overhead	Distribution	Luminaire	LUM HPS RWY 100W	Active	100	90435-67003	S14	CITY OF PAWTUCKET
0030	000	1	CENTRAL	AVE	130	Overhead	Distribution	Luminaire	LUM HPS RWY 100W	Active	100	90435-67003	S14	CITY OF PAWTUCKET
0032	000	1	CENTRAL	AVE	130	Overhead	Distribution	Luminaire	LUM HPS RWY 100W	Active	100	90435-67003	S14	CITY OF PAWTUCKET
0036	000	1	CENTRAL	AVE	130	Overhead	Distribution	Luminaire	LUM HPS RWY 100W	Active	100	90435-67003	S14	CITY OF PAWTUCKET
0038	000	1	CENTRAL	AVE	130	Overhead	Distribution	Luminaire	LUM HPS RWY 100W	Active	100	90435-67003	S14	CITY OF PAWTUCKET
0040	000	1	CENTRAL	AVE	130	Overhead	Distribution	Luminaire	LUM HPS RWY 100W	Active	100	90435-67003	S14	CITY OF PAWTUCKET
0042	000	1	CENTRAL	AVE	130	Overhead	Distribution	Luminaire	LUM HPS RWY 100W	Active	100	90435-67003	S14	CITY OF PAWTUCKET
0043	000	1	CENTRAL	AVE	130	Overhead	Distribution	Luminaire	LUM HPS RWY 100W	Active	100	90435-67003	S14	CITY OF PAWTUCKET
0043	000	2	CENTRAL	AVE	130	Overhead	Distribution	Luminaire	LUM HPS RWY 100W	Active	100	90435-67003	S14	CITY OF PAWTUCKET
0043	001	1	CENTRAL	AVE	130	Overhead	Distribution	Luminaire	LUM HPS RWY 100W	Active	100	90435-67003	S14	CITY OF PAWTUCKET
0044	000	1	CENTRAL	AVE	130	Overhead	Distribution	Luminaire	LUM HPS RWY 100W	Active	100	90435-67003	S14	CITY OF PAWTUCKET
0045	000	1	CENTRAL	AVE	130	Overhead	Distribution	Luminaire	LUM HPS RWY 100W	Active	100	90435-67003	S14	CITY OF PAWTUCKET
0045	001	1	CENTRAL	AVE	130	Overhead	Distribution	Luminaire	LUM HPS RWY 100W	Active	100	90435-67003	S14	CITY OF PAWTUCKET
0046	000	1	CENTRAL	AVE	130	Overhead	Distribution	Luminaire	LUM HPS RWY 100W	Active	100	90435-67003	S14	CITY OF PAWTUCKET
0046	001	1	CENTRAL	AVE	130	Overhead	Distribution	Luminaire	LUM HPS RWY 100W	Active	100	90435-67003	S14	CITY OF PAWTUCKET
0047	000	1	CENTRAL	AVE	130	Overhead	Distribution	Luminaire	LUM HPS RWY 100W	Active	100	90435-67003	S14	CITY OF PAWTUCKET

0047	001	1	CENTRAL	AVE	130	Overhead	Distribution	Luminaire	LUM HPS RWY 100W	Active	100	90435-67003	S14	CITY OF PAWTUCKET
0048	000	1	CENTRAL	AVE	130	Overhead	Distribution	Luminaire	LUM HPS RWY 100W	Active	100	90435-67003	S14	CITY OF PAWTUCKET
0048	001	1	CENTRAL	AVE	130	Overhead	Distribution	Luminaire	LUM HPS RWY 100W	Active	100	90435-67003	S14	CITY OF PAWTUCKET
0049	000	1	CENTRAL	AVE	130	Overhead	Distribution	Luminaire	LUM HPS RWY 100W	Active	100	90435-67003	S14	CITY OF PAWTUCKET
0049	001	1	CENTRAL	AVE	130	Overhead	Distribution	Luminaire	LUM HPS RWY 100W	Active	100	90435-67003	S14	CITY OF PAWTUCKET
0050	001	1	CENTRAL	AVE	130	Overhead	Distribution	Luminaire	LUM HPS RWY 100W	Active	100	90435-67003	S14	CITY OF PAWTUCKET
0052	000	1	CENTRAL	AVE	130	Overhead	Distribution	Luminaire	LUM HPS RWY 100W	Active	100	90435-67003	S14	CITY OF PAWTUCKET
0053	001	1	CENTRAL	AVE	130	Overhead	Distribution	Luminaire	LUM HPS RWY 100W	Active	100	90435-67003	S14	CITY OF PAWTUCKET
0055	000	1	CENTRAL	AVE	130	Overhead	Distribution	Luminaire	LUM HPS RWY 100W	Active	100	90435-67003	S14	CITY OF PAWTUCKET
0056	001	1	CENTRAL	AVE	130	Overhead	Distribution	Luminaire	LUM HPS RWY 100W	Active	100	90435-67003	S14	CITY OF PAWTUCKET
0057	001	1	CENTRAL	AVE	130	Overhead	Distribution	Luminaire	LUM HPS RWY 250W	Active	250	90435-67003	S14	CITY OF PAWTUCKET
0058	000	1	CENTRAL	AVE	130	Overhead	Distribution	Luminaire	LUM HPS RWY 250W	Active	250	90435-67003	S14	CITY OF PAWTUCKET
0059	001	1	CENTRAL	AVE	130	Overhead	Distribution	Luminaire	LUM HPS RWY 250W	Active	250	90435-67003	S14	CITY OF PAWTUCKET
0060	000	1	CENTRAL	AVE	130	Overhead	Distribution	Luminaire	LUM HPS RWY 250W	Active	250	90435-67003	S14	CITY OF PAWTUCKET
0061	000	1	CENTRAL	AVE	130	Overhead	Distribution	Luminaire	LUM HPS RWY 250W	Active	250	90435-67003	S14	CITY OF PAWTUCKET
0062	001	1	CENTRAL	AVE	130	Overhead	Distribution	Luminaire	LUM HPS RWY 250W	Active	250	90435-67003	S14	CITY OF PAWTUCKET
0063	000	1	CENTRAL	AVE	130	Overhead	Distribution	Luminaire	LUM HPS RWY 100W	Active	100	90435-67003	S14	CITY OF PAWTUCKET
0064	001	1	CENTRAL	AVE	130	Overhead	Distribution	Luminaire	LUM HPS RWY 100W	Active	100	90435-67003	S14	CITY OF PAWTUCKET
0065	000	1	CENTRAL	AVE	130	Overhead	Distribution	Luminaire	LUM HPS RWY 250W	Active	250	90435-67003	S14	CITY OF PAWTUCKET
0067	000	1	CENTRAL	AVE	130	Overhead	Distribution	Luminaire	LUM HPS RWY 250W	Active	250	90435-67003	S14	CITY OF PAWTUCKET
0068	000	1	CENTRAL	AVE	130	Overhead	Distribution	Luminaire	LUM HPS RWY 250W	Active	250	90435-67003	S14	CITY OF PAWTUCKET
0069	001	1	CENTRAL	AVE	130	Overhead	Distribution	Luminaire	LUM HPS RWY 250W	Active	250	90435-67003	S14	CITY OF PAWTUCKET
0071	000	1	CENTRAL	AVE	130	Overhead	Distribution	Luminaire	LUM HPS RWY 100W	Active	100	90435-67003	S14	CITY OF PAWTUCKET
0072	001	1	CENTRAL	AVE	130	Overhead	Distribution	Luminaire	LUM HPS RWY 100W	Active	100	90435-67003	S14	CITY OF PAWTUCKET
0073	000	1	CENTRAL	AVE	130	Overhead	Distribution	Luminaire	LUM HPS RWY 100W	Active	100	90435-67003	S14	CITY OF PAWTUCKET
0074	001	1	CENTRAL	AVE	130	Overhead	Distribution	Luminaire	LUM HPS RWY 250W	Active	250	90435-67003	S14	CITY OF PAWTUCKET
0076	001	1	CENTRAL	AVE	130	Overhead	Distribution	Luminaire	LUM HPS RWY 250W	Active	250	90435-67003	S14	CITY OF PAWTUCKET
0077	000	1	CENTRAL	AVE	130	Overhead	Distribution	Luminaire	LUM HPS RWY 100W	Active	100	90435-67003	S14	CITY OF PAWTUCKET
0078	001	1	CENTRAL	AVE	130	Overhead	Distribution	Luminaire	LUM HPS RWY 100W	Active	100	90435-67003	S14	CITY OF PAWTUCKET
0079	000	1	CENTRAL	AVE	130	Overhead	Distribution	Luminaire	LUM HPS RWY 100W	Active	100	90435-67003	S14	CITY OF PAWTUCKET
0080	001	1	CENTRAL	AVE	130	Overhead	Distribution	Luminaire	LUM HPS RWY 100W	Active	100	90435-67003	S14	CITY OF PAWTUCKET
0081	000	1	CENTRAL	AVE	130	Overhead	Distribution	Luminaire	LUM HPS RWY 100W	Active	100	90435-67003	S14	CITY OF PAWTUCKET
0082	001	1	CENTRAL	AVE	130	Overhead	Distribution	Luminaire	LUM HPS RWY 100W	Active	100	90435-67003	S14	CITY OF PAWTUCKET
0083	000	1	CENTRAL	AVE	130	Overhead	Distribution	Luminaire	LUM HPS RWY 250W	Active	250	90435-67003	S14	CITY OF PAWTUCKET
0084	001	1	CENTRAL	AVE	130	Overhead	Distribution	Luminaire	LUM HPS RWY 250W	Active	250	90435-67003	S14	CITY OF PAWTUCKET
0085	000	1	CENTRAL	AVE	130	Overhead	Distribution	Luminaire	LUM HPS RWY 100W	Active	100	90435-67003	S14	CITY OF PAWTUCKET
0086	001	1	CENTRAL	AVE	130	Overhead	Distribution	Luminaire	LUM HPS RWY 100W	Active	100	90435-67003	S14	CITY OF PAWTUCKET
0087	000	1	CENTRAL	AVE	130	Overhead	Distribution	Luminaire	LUM HPS RWY 100W	Active	100	90435-67003	S14	CITY OF PAWTUCKET
0088	001	1	CENTRAL	AVE	130	Overhead	Distribution	Luminaire	LUM HPS RWY 100W	Active	100	90435-67003	S14	CITY OF PAWTUCKET
0089	000	1	CENTRAL	AVE	130	Overhead	Distribution	Luminaire	LUM HPS RWY 100W	Active	100	90435-67003	S14	CITY OF PAWTUCKET
0090	001	1	CENTRAL	AVE	130	Overhead	Distribution	Luminaire	LUM HPS RWY 100W	Active	100	90435-67003	S14	CITY OF PAWTUCKET
0091	000	1	CENTRAL	AVE	130	Overhead	Distribution	Luminaire	LUM HPS RWY 100W	Active	100	90435-67003	S14	CITY OF PAWTUCKET
0092	001	1	CENTRAL	AVE	130	Overhead	Distribution	Luminaire	LUM HPS RWY 100W	Active	100	90435-67003	S14	CITY OF PAWTUCKET
0093	000	1	CENTRAL	AVE	130	Overhead	Distribution	Luminaire	LUM HPS RWY 100W	Active	100	90435-67003	S14	CITY OF PAWTUCKET
0094	001	1	CENTRAL	AVE	130	Overhead	Distribution	Luminaire	LUM HPS RWY 250W	Active	250	90435-67003	S14	CITY OF PAWTUCKET
0096	000	1	CENTRAL	AVE	130	Overhead	Distribution	Luminaire	LUM HPS RWY 250W	Active	250	90435-67003	S14	CITY OF PAWTUCKET
0097	000	1	CENTRAL	AVE	130	Overhead	Distribution	Luminaire	LUM HPS RWY 250W	Active	250	90435-67003	S14	CITY OF PAWTUCKET
0098	000	1	CENTRAL	AVE	130	Overhead	Distribution	Luminaire	LUM HPS RWY 100W	Active	100	90435-67003	S14	CITY OF PAWTUCKET
0099	001	1	CENTRAL	AVE	130	Overhead	Distribution	Luminaire	LUM HPS RWY 100W	Active	100	90435-67003	S14	CITY OF PAWTUCKET
0100	000	1	CENTRAL	AVE	130	Overhead	Distribution	Luminaire	LUM HPS RWY 100W	Active	100	90435-67003	S14	CITY OF PAWTUCKET
0101	001	1	CENTRAL	AVE	130	Overhead	Distribution	Luminaire	LUM HPS RWY 100W	Active	100	90435-67003	S14	CITY OF PAWTUCKET
0102	000	1	CENTRAL	AVE	130	Overhead	Distribution	Luminaire	LUM HPS RWY 100W	Active	100	90435-67003	S14	CITY OF PAWTUCKET
0103	001	1	CENTRAL	AVE	130	Overhead	Distribution	Luminaire	LUM HPS RWY 100W	Active	100	90435-67003	S14	CITY OF PAWTUCKET
0104	000	1	CENTRAL	AVE	130	Overhead	Distribution	Luminaire	LUM HPS RWY 100W	Active	100	90435-67003	S14	CITY OF PAWTUCKET
0105	001	1	CENTRAL	AVE	130	Overhead	Distribution	Luminaire	LUM HPS RWY 100W	Active	100	90435-67003	S14	CITY OF PAWTUCKET
0106	000	1	CENTRAL	AVE	130	Overhead	Distribution	Luminaire	LUM HPS RWY 100W	Active	100	90435-67003	S14	CITY OF PAWTUCKET
0107	001	1	CENTRAL	AVE	130	Overhead	Distribution	Luminaire	LUM HPS RWY 100W	Active	100	90435-67003	S14	CITY OF PAWTUCKET
0108	000	1	CENTRAL	AVE	130	Overhead	Distribution	Luminaire	LUM HPS RWY 100W	Active	100	90435-67003	S14	CITY OF PAWTUCKET
0109	001	1	CENTRAL	AVE	130	Overhead	Distribution	Luminaire	LUM HPS RWY 100W	Active	100	90435-67003	S14	CITY OF PAWTUCKET
0110	000	1	CENTRAL	AVE	130	Overhead	Distribution	Luminaire	LUM HPS RWY 100W	Active	100	90435-67003	S14	CITY OF PAWTUCKET
0111	001	1	CENTRAL	AVE	130	Overhead	Distribution	Luminaire	LUM HPS RWY 100W	Active	100	90435-67003	S14	CITY OF PAWTUCKET
0112	000	1	CENTRAL	AVE	130	Overhead	Distribution	Luminaire	LUM HPS RWY 100W	Active	100	90435-67003	S14	CITY OF PAWTUCKET
0113	001	1	CENTRAL	AVE	130	Overhead	Distribution	Luminaire	LUM HPS RWY 100W	Active	100	90435-67003	S14	CITY OF PAWTUCKET

0114	001	1	CENTRAL	AVE	130	Overhead	Distribution	Luminaire	LUM HPS RWY 100W	Active	100	90435-67003	S14	CITY OF PAWTUCKET
0115	000	1	CENTRAL	AVE	130	Overhead	Distribution	Luminaire	LUM HPS RWY 100W	Active	100	90435-67003	S14	CITY OF PAWTUCKET
0116	001	1	CENTRAL	AVE	130	Overhead	Distribution	Luminaire	LUM HPS RWY 250W	Active	250	90435-67003	S14	CITY OF PAWTUCKET
0117	001	1	CENTRAL	AVE	130	Overhead	Distribution	Luminaire	LUM HPS RWY 250W	Active	250	90435-67003	S14	CITY OF PAWTUCKET
0118	000	1	CENTRAL	AVE	130	Overhead	Distribution	Luminaire	LUM HPS RWY 100W	Active	100	90435-67003	S14	CITY OF PAWTUCKET
0119	001	1	CENTRAL	AVE	130	Overhead	Distribution	Luminaire	LUM HPS RWY 100W	Active	100	90435-67003	S14	CITY OF PAWTUCKET
0120	000	1	CENTRAL	AVE	130	Overhead	Distribution	Luminaire	LUM HPS RWY 100W	Active	100	90435-67003	S14	CITY OF PAWTUCKET
0121	001	1	CENTRAL	AVE	130	Overhead	Distribution	Luminaire	LUM HPS RWY 100W	Active	100	90435-67003	S14	CITY OF PAWTUCKET
0122	000	1	CENTRAL	AVE	130	Overhead	Distribution	Luminaire	LUM HPS RWY 100W	Active	100	90435-67003	S14	CITY OF PAWTUCKET
0123	001	1	CENTRAL	AVE	130	Overhead	Distribution	Luminaire	LUM HPS RWY 100W	Active	100	90435-67003	S14	CITY OF PAWTUCKET
0124	000	1	CENTRAL	AVE	130	Overhead	Distribution	Luminaire	LUM HPS RWY 100W	Active	100	90435-67003	S14	CITY OF PAWTUCKET
0125	001	1	CENTRAL	AVE	130	Overhead	Distribution	Luminaire	LUM HPS RWY 100W	Active	100	90435-67003	S14	CITY OF PAWTUCKET
0126	001	1	CENTRAL	AVE	130	Overhead	Distribution	Luminaire	LUM HPS RWY 250W	Active	250	90435-67003	S14	CITY OF PAWTUCKET
0127	001	1	CENTRAL	AVE	130	Overhead	Distribution	Luminaire	LUM HPS RWY 100W	Active	100	90435-67003	S14	CITY OF PAWTUCKET
0128	000	1	CENTRAL	AVE	130	Overhead	Distribution	Luminaire	LUM HPS RWY 100W	Active	100	90435-67003	S14	CITY OF PAWTUCKET
0129	000	1	CENTRAL	AVE	130	Overhead	Distribution	Luminaire	LUM HPS RWY 100W	Active	100	90435-67003	S14	CITY OF PAWTUCKET
0130	000	1	CENTRAL	AVE	130	Overhead	Distribution	Luminaire	LUM HPS RWY 100W	Active	100	90435-67003	S14	CITY OF PAWTUCKET
0130	001	1	CENTRAL	AVE	130	Overhead	Distribution	Luminaire	LUM HPS RWY 100W	Active	100	90435-67003	S14	CITY OF PAWTUCKET
0132	001	1	CENTRAL	AVE	130	Overhead	Distribution	Luminaire	LUM HPS RWY 250W	Active	250	90435-67003	S14	CITY OF PAWTUCKET
0133	001	1	CENTRAL	AVE	130	Overhead	Distribution	Luminaire	LUM HPS RWY 250W	Active	250	90435-67003	S14	CITY OF PAWTUCKET
0134	000	1	CENTRAL	AVE	130	Overhead	Distribution	Luminaire	LUM HPS RWY 250W	Active	250	90435-67003	S14	CITY OF PAWTUCKET
0135	000	1	CENTRAL	AVE	130	Overhead	Distribution	Luminaire	LUM HPS RWY 250W	Active	250	90435-67003	S14	CITY OF PAWTUCKET
0136	000	1	CENTRAL	AVE	130	Overhead	Distribution	Luminaire	LUM HPS RWY 250W	Active	250	90435-67003	S14	CITY OF PAWTUCKET
0137	000	1	CENTRAL	AVE	130	Overhead	Distribution	Luminaire	LUM HPS RWY 250W	Active	250	90435-67003	S14	CITY OF PAWTUCKET
0138	000	1	CENTRAL	AVE	130	Overhead	Distribution	Luminaire	LUM HPS RWY 250W	Active	250	90435-67003	S14	CITY OF PAWTUCKET
0002	000	1	CENTRE	ST	131	Overhead	Distribution	Luminaire	LUM HPS RWY 70W	Active	70	90435-67003	S14	CITY OF PAWTUCKET
0003	000	1	CENTRE	ST	131	Overhead	Distribution	Luminaire	LUM HPS RWY 70W	Active	70	90435-67003	S14	CITY OF PAWTUCKET
0004	000	1	CENTRE	ST	131	Overhead	Distribution	Luminaire	LUM HPS RWY 70W	Active	70	90435-67003	S14	CITY OF PAWTUCKET
0005	000	1	CENTRE	ST	131	Overhead	Distribution	Luminaire	LUM HPS RWY 70W	Active	70	90435-67003	S14	CITY OF PAWTUCKET
0007	000	1	CENTRE	ST	131	Overhead	Distribution	Luminaire	LUM HPS RWY 70W	Active	70	90435-67003	S14	CITY OF PAWTUCKET
0011	000	1	CENTRE	ST	131	Overhead	Distribution	Luminaire	LUM HPS RWY 70W	Active	70	90435-67003	S14	CITY OF PAWTUCKET
0013	000	1	CENTRE	ST	131	Overhead	Distribution	Luminaire	LUM HPS RWY 70W	Active	70	90435-67003	S14	CITY OF PAWTUCKET
0004	000	1	CHANDLER	AVE	133	Overhead	Distribution	Luminaire	LUM HPS RWY 70W	Active	70	90435-67003	S14	CITY OF PAWTUCKET
0006	000	1	CHANDLER	AVE	133	Overhead	Distribution	Luminaire	LUM HPS RWY 70W	Active	70	90435-67003	S14	CITY OF PAWTUCKET
0007	000	1	CHANDLER	AVE	133	Overhead	Distribution	Luminaire	LUM HPS RWY 50W	Active	50	90435-67003	S14	CITY OF PAWTUCKET
0008	000	1	CHANDLER	AVE	133	Overhead	Distribution	Luminaire	LUM HPS RWY 70W	Active	70	90435-67003	S14	CITY OF PAWTUCKET
0011	000	1	CHANDLER	AVE	133	Overhead	Distribution	Luminaire	LUM HPS RWY 70W	Active	70	90435-67003	S14	CITY OF PAWTUCKET
0015	000	1	CHANDLER	AVE	133	Overhead	Distribution	Luminaire	LUM HPS RWY 70W	Active	70	90435-67003	S14	CITY OF PAWTUCKET
0016	001	1	CHANDLER	AVE	133	Overhead	Distribution	Luminaire	LUM HPS RWY 70W	Active	70	90435-67003	S14	CITY OF PAWTUCKET
0018	000	1	CHANDLER	AVE	133	Overhead	Distribution	Luminaire	LUM HPS RWY 70W	Active	70	90435-67003	S14	CITY OF PAWTUCKET
0020	000	1	CHANDLER	AVE	133	Overhead	Distribution	Luminaire	LUM HPS RWY 70W	Active	70	90435-67003	S14	CITY OF PAWTUCKET
0022	000	1	CHANDLER	AVE	133	Overhead	Distribution	Luminaire	LUM HPS RWY 70W	Active	70	90435-67003	S14	CITY OF PAWTUCKET
0024	000	1	CHANDLER	AVE	133	Overhead	Distribution	Luminaire	LUM HPS RWY 70W	Active	70	90435-67003	S14	CITY OF PAWTUCKET
0026	000	1	CHANDLER	AVE	133	Overhead	Distribution	Luminaire	LUM HPS RWY 70W	Active	70	90435-67003	S14	CITY OF PAWTUCKET
0028	000	1	CHANDLER	AVE	133	Overhead	Distribution	Luminaire	LUM HPS RWY 70W	Active	70	90435-67003	S14	CITY OF PAWTUCKET
0029	000	1	CHANDLER	AVE	133	Overhead	Distribution	Luminaire	LUM HPS RWY 70W	Active	70	90435-67003	S14	CITY OF PAWTUCKET
0001	000	1	CHAPLIN	ST	134	Overhead	Distribution	Luminaire	LUM HPS RWY 70W	Active	70	90435-67003	S14	CITY OF PAWTUCKET
0003	000	1	CHAPLIN	ST	134	Overhead	Distribution	Luminaire	LUM HPS RWY 70W	Active	70	90435-67003	S14	CITY OF PAWTUCKET
0005	000	1	CHAPLIN	ST	134	Overhead	Distribution	Luminaire	LUM HPS RWY 70W	Active	70	90435-67003	S14	CITY OF PAWTUCKET
0006	000	1	CHAPLIN	ST	134	Overhead	Distribution	Luminaire	LUM HPS RWY 70W	Active	70	90435-67003	S14	CITY OF PAWTUCKET
0007	000	1	CHAPLIN	ST	134	Overhead	Distribution	Luminaire	LUM HPS RWY 70W	Active	70	90435-67003	S14	CITY OF PAWTUCKET
0009	000	1	CHAPLIN	ST	134	Overhead	Distribution	Luminaire	LUM HPS RWY 70W	Active	70	90435-67003	S14	CITY OF PAWTUCKET
0010	000	1	CHAPLIN	ST	134	Overhead	Distribution	Luminaire	LUM HPS RWY 70W	Active	70	90435-67003	S14	CITY OF PAWTUCKET
0011	000	1	CHAPLIN	ST	134	Overhead	Distribution	Luminaire	LUM HPS RWY 70W	Active	70	90435-67003	S14	CITY OF PAWTUCKET
0013	000	1	CHAPLIN	ST	134	Overhead	Distribution	Luminaire	LUM HPS RWY 70W	Active	70	90435-67003	S14	CITY OF PAWTUCKET
0015	000	1	CHAPLIN	ST	134	Overhead	Distribution	Luminaire	LUM HPS RWY 70W	Active	70	90435-67003	S14	CITY OF PAWTUCKET
0017	000	1	CHAPLIN	ST	134	Overhead	Distribution	Luminaire	LUM HPS RWY 70W	Active	70	90435-67003	S14	CITY OF PAWTUCKET
0019	000	1	CHAPLIN	ST	134	Overhead	Distribution	Luminaire	LUM HPS RWY 70W	Active	70	90435-67003	S14	CITY OF PAWTUCKET
0002	000	1	CHARLES	ST	135	Overhead	Distribution	Luminaire	LUM HPS RWY 70W	Active	70	90435-67003	S14	CITY OF PAWTUCKET
0003	000	1	CHARLES	ST	135	Overhead	Distribution	Luminaire	LUM HPS RWY 70W	Active	70	90435-67003	S14	CITY OF PAWTUCKET
0004	000	1	CHARLES	ST	135	Overhead	Distribution	Luminaire	LUM HPS RWY 70W	Active	70	90435-67003	S14	CITY OF PAWTUCKET
0001	000	1	CHARLTON	ST	136	Overhead	Distribution	Luminaire	LUM HPS RWY 100W	Active	100	90435-67003	S14	CITY OF PAWTUCKET
0002	000	1	CHARLTON	ST	136	Overhead	Distribution	Luminaire	LUM HPS RWY 100W	Active	100	90435-67003	S14	CITY OF PAWTUCKET

0004	000	1	CHARLTON	ST	136	Overhead	Distribution	Luminaire	LUM HPS RWY 70W	Active	70	90435-67003	S14	CITY OF PAWTUCKET
0006	000	1	CHARLTON	ST	136	Overhead	Distribution	Luminaire	LUM HPS RWY 70W	Active	70	90435-67003	S14	CITY OF PAWTUCKET
0008	000	1	CHARLTON	ST	136	Overhead	Distribution	Luminaire	LUM HPS RWY 70W	Active	70	90435-67003	S14	CITY OF PAWTUCKET
0009	000	1	CHARLTON	ST	136	Overhead	Distribution	Luminaire	LUM HPS RWY 100W	Active	100	90435-67003	S14	CITY OF PAWTUCKET
0010	000	1	CHARLTON	ST	136	Overhead	Distribution	Luminaire	LUM HPS RWY 70W	Active	70	90435-67003	S14	CITY OF PAWTUCKET
0001	000	1	CHARPENTIER	AVE	137	Overhead	Distribution	Luminaire	LUM HPS RWY 70W	Active	70	90435-67003	S14	CITY OF PAWTUCKET
0003	000	1	CHARPENTIER	AVE	137	Overhead	Distribution	Luminaire	LUM HPS RWY 70W	Active	70	90435-67003	S14	CITY OF PAWTUCKET
0005	000	1	CHARPENTIER	AVE	137	Overhead	Distribution	Luminaire	LUM HPS RWY 70W	Active	70	90435-67003	S14	CITY OF PAWTUCKET
0005	000	1	CHASE	ST	138	Overhead	Distribution	Luminaire	LUM HPS RWY 100W	Active	100	90435-67003	S14	CITY OF PAWTUCKET
0002	000	1	CHERRY	ST	139	Overhead	Distribution	Luminaire	LUM HPS RWY 70W	Active	70	90435-67003	S14	CITY OF PAWTUCKET
0003	000	1	CHERRY	ST	139	Overhead	Distribution	Luminaire	LUM HPS RWY 100W	Active	100	90435-67003	S14	CITY OF PAWTUCKET
0004	000	1	CHERRY	ST	139	Overhead	Distribution	Luminaire	LUM HPS RWY 70W	Active	70	90435-67003	S14	CITY OF PAWTUCKET
0005	000	1	CHERRY	ST	139	Overhead	Distribution	Luminaire	LUM HPS RWY 100W	Active	100	90435-67003	S14	CITY OF PAWTUCKET
0006	000	1	CHERRY	ST	139	Overhead	Distribution	Luminaire	LUM HPS RWY 70W	Active	70	90435-67003	S14	CITY OF PAWTUCKET
0007	000	1	CHERRY	ST	139	Overhead	Distribution	Luminaire	LUM HPS RWY 100W	Active	100	90435-67003	S14	CITY OF PAWTUCKET
0008	000	1	CHERRY	ST	139	Overhead	Distribution	Luminaire	LUM HPS RWY 70W	Active	70	90435-67003	S14	CITY OF PAWTUCKET
0003	000	1	CHESTNUT	ST	140	Overhead	Distribution	Luminaire	LUM HPS RWY 70W	Active	70	90435-67003	S14	CITY OF PAWTUCKET
0004	000	1	CHESTNUT	ST	140	Overhead	Distribution	Luminaire	LUM HPS RWY 70W	Active	70	90435-67003	S14	CITY OF PAWTUCKET
0009	000	1	CHURCH	ST	141	Overhead	Distribution	Luminaire	LUM HPS RWY 100W	Active	100	90435-67003	S14	CITY OF PAWTUCKET
0010	000	1	CHURCH	ST	141	Overhead	Distribution	Luminaire	LUM HPS RWY 100W	Active	100	90435-67003	S14	CITY OF PAWTUCKET
0011	000	1	CHURCH	ST	141	Overhead	Distribution	Luminaire	LUM HPS RWY 100W	Active	100	90435-67003	S14	CITY OF PAWTUCKET
0011	030	1	CHURCH	ST	141	Overhead	Distribution	Luminaire	LUM HPS RWY 250W	Active	250	90435-67003	S14	CITY OF PAWTUCKET
0011	030	2	CHURCH	ST	141	Overhead	Distribution	Luminaire	LUM HPS RWY 250W	Active	250	90435-67003	S14	CITY OF PAWTUCKET
0011	031	1	CHURCH	ST	141	Overhead	Distribution	Luminaire	LUM HPS RWY 100W	Active	100	90435-67003	S14	CITY OF PAWTUCKET
0012	000	1	CHURCH	ST	141	Overhead	Distribution	Luminaire	LUM HPS RWY 100W	Active	100	90435-67003	S14	CITY OF PAWTUCKET
0013	000	1	CHURCH	ST	141	Overhead	Distribution	Luminaire	LUM HPS RWY 100W	Active	100	90435-67003	S14	CITY OF PAWTUCKET
0014	000	1	CHURCH	ST	141	Overhead	Distribution	Luminaire	LUM HPS RWY 100W	Active	100	90435-67003	S14	CITY OF PAWTUCKET
0015	000	1	CHURCH	ST	141	Overhead	Distribution	Luminaire	LUM HPS RWY 100W	Active	100	90435-67003	S14	CITY OF PAWTUCKET
0016	000	1	CHURCH	ST	141	Overhead	Distribution	Luminaire	LUM HPS RWY 100W	Active	100	90435-67003	S14	CITY OF PAWTUCKET
0017	000	1	CHURCH	ST	141	Overhead	Distribution	Luminaire	LUM HPS RWY 100W	Active	100	90435-67003	S14	CITY OF PAWTUCKET
0018	000	1	CHURCH	ST	141	Overhead	Distribution	Luminaire	LUM HPS RWY 100W	Active	100	90435-67003	S14	CITY OF PAWTUCKET
0002	000	1	CLARK	AVE	143	Overhead	Distribution	Luminaire	LUM HPS RWY 70W	Active	70	90435-67003	S14	CITY OF PAWTUCKET
0003	000	1	CLARK	AVE	143	Overhead	Distribution	Luminaire	LUM HPS RWY 70W	Active	70	90435-67003	S14	CITY OF PAWTUCKET
0004	000	1	CLARK	AVE	143	Overhead	Distribution	Luminaire	LUM HPS RWY 70W	Active	70	90435-67003	S14	CITY OF PAWTUCKET
0005	000	1	CLARK	AVE	143	Overhead	Distribution	Luminaire	LUM HPS RWY 70W	Active	70	90435-67003	S14	CITY OF PAWTUCKET
0007	000	1	CLARK	AVE	143	Overhead	Distribution	Luminaire	LUM HPS RWY 100W	Active	100	90435-67003	S14	CITY OF PAWTUCKET
0007	000	2	CLARK	AVE	143	Overhead	Distribution	Luminaire	LUM HPS RWY 70W	Active	70	90435-67003	S14	CITY OF PAWTUCKET
0002	000	1	CLARNER	ST	144	Overhead	Distribution	Luminaire	LUM HPS RWY 70W	Active	70	90435-67003	S14	CITY OF PAWTUCKET
0005	000	1	CLARNER	ST	144	Overhead	Distribution	Luminaire	LUM HPS RWY 70W	Active	70	90435-67003	S14	CITY OF PAWTUCKET
0006	000	1	CLARNER	ST	144	Overhead	Distribution	Luminaire	LUM HPS RWY 70W	Active	70	90435-67003	S14	CITY OF PAWTUCKET
0007	000	1	CLARNER	ST	144	Overhead	Distribution	Luminaire	LUM HPS RWY 70W	Active	70	90435-67003	S14	CITY OF PAWTUCKET
0001	001	1	CLAY	ST	145	Overhead	Distribution	Luminaire	LUM MV RWY 175W	Active	175	90435-67003	S14	CITY OF PAWTUCKET
0026	000	1	CLAY	ST	145	Overhead	Distribution	Luminaire	LUM MV RWY 175W	Active	175	90435-67003	S14	CITY OF PAWTUCKET
0002	000	1	CLAYTON	ST	146	Overhead	Distribution	Luminaire	LUM HPS RWY 70W	Active	70	90435-67003	S14	CITY OF PAWTUCKET
0003	000	1	CLAYTON	ST	146	Overhead	Distribution	Luminaire	LUM HPS RWY 70W	Active	70	90435-67003	S14	CITY OF PAWTUCKET
0002	000	1	CLEVELAND	ST	147	Overhead	Distribution	Luminaire	LUM HPS RWY 70W	Active	70	90435-67003	S14	CITY OF PAWTUCKET
0004	000	1	CLEVELAND	ST	147	Overhead	Distribution	Luminaire	LUM HPS RWY 70W	Active	70	90435-67003	S14	CITY OF PAWTUCKET
0005	000	1	CLEVELAND	ST	147	Overhead	Distribution	Luminaire	LUM HPS RWY 70W	Active	70	90435-67003	S14	CITY OF PAWTUCKET
0007	000	1	CLEVELAND	ST	147	Overhead	Distribution	Luminaire	LUM HPS RWY 70W	Active	70	90435-67003	S14	CITY OF PAWTUCKET
0008	001	1	CLEVELAND	ST	147	Overhead	Distribution	Luminaire	LUM HPS RWY 70W	Active	70	90435-67003	S14	CITY OF PAWTUCKET
0010	000	1	CLEVELAND	ST	147	Overhead	Distribution	Luminaire	LUM HPS RWY 70W	Active	70	90435-67003	S14	CITY OF PAWTUCKET
0011	000	1	CLEVELAND	ST	147	Overhead	Distribution	Luminaire	LUM HPS RWY 70W	Active	70	90435-67003	S14	CITY OF PAWTUCKET
0013	000	1	CLEVELAND	ST	147	Overhead	Distribution	Luminaire	LUM HPS RWY 70W	Active	70	90435-67003	S14	CITY OF PAWTUCKET
0014	000	1	CLEVELAND	ST	147	Overhead	Distribution	Luminaire	LUM HPS RWY 70W	Active	70	90435-67003	S14	CITY OF PAWTUCKET
0015	000	1	CLEVELAND	ST	147	Overhead	Distribution	Luminaire	LUM HPS RWY 70W	Active	70	90435-67003	S14	CITY OF PAWTUCKET
0016	000	1	CLEVELAND	ST	147	Overhead	Distribution	Luminaire	LUM HPS RWY 70W	Active	70	90435-67003	S14	CITY OF PAWTUCKET
0018	000	1	CLEVELAND	ST	147	Overhead	Distribution	Luminaire	LUM HPS RWY 70W	Active	70	90435-67003	S14	CITY OF PAWTUCKET
0020	000	1	CLEVELAND	ST	147	Overhead	Distribution	Luminaire	LUM HPS RWY 100W	Active	100	90435-67003	S14	CITY OF PAWTUCKET
0022	000	1	CLEVELAND	ST	147	Overhead	Distribution	Luminaire	LUM HPS RWY 70W	Active	70	90435-67003	S14	CITY OF PAWTUCKET
0023	000	1	CLEVELAND	ST	147	Overhead	Distribution	Luminaire	LUM HPS RWY 100W	Active	100	90435-67003	S14	CITY OF PAWTUCKET
0025	000	1	CLEVELAND	ST	147	Overhead	Distribution	Luminaire	LUM HPS RWY 100W	Active	100	90435-67003	S14	CITY OF PAWTUCKET
0002	000	1	CLEWS	ST	148	Overhead	Distribution	Luminaire	LUM HPS RWY 70W	Active	70	90435-67003	S14	CITY OF PAWTUCKET
0004	000	1	CLEWS	ST	148	Overhead	Distribution	Luminaire	LUM HPS RWY 70W	Active	70	90435-67003	S14	CITY OF PAWTUCKET

0006	000	1	CLEWS	ST	148	Overhead	Distribution	Luminaire	LUM HPS RWY 70W	Active	70	90435-67003	S14	CITY OF PAWTUCKET
0008	000	1	CLEWS	ST	148	Overhead	Distribution	Luminaire	LUM HPS RWY 70W	Active	70	90435-67003	S14	CITY OF PAWTUCKET
0010	000	1	CLEWS	ST	148	Overhead	Distribution	Luminaire	LUM HPS RWY 70W	Active	70	90435-67003	S14	CITY OF PAWTUCKET
0012	000	1	CLEWS	ST	148	Overhead	Distribution	Luminaire	LUM HPS RWY 70W	Active	70	90435-67003	S14	CITY OF PAWTUCKET
0015	000	1	CLEWS	ST	148	Overhead	Distribution	Luminaire	LUM HPS RWY 70W	Active	70	90435-67003	S14	CITY OF PAWTUCKET
0017	000	1	CLEWS	ST	148	Overhead	Distribution	Luminaire	LUM HPS RWY 70W	Active	70	90435-67003	S14	CITY OF PAWTUCKET
0019	000	1	CLEWS	ST	148	Overhead	Distribution	Luminaire	LUM HPS RWY 70W	Active	70	90435-67003	S14	CITY OF PAWTUCKET
0001	000	1	CLIFFORD	ST	149	Overhead	Distribution	Luminaire	LUM HPS RWY 70W	Active	70	90435-67003	S14	CITY OF PAWTUCKET
0003	000	1	CLIFFORD	ST	149	Overhead	Distribution	Luminaire	LUM HPS RWY 70W	Active	70	90435-67003	S14	CITY OF PAWTUCKET
0006	000	1	CLIFFORD	ST	149	Overhead	Distribution	Luminaire	LUM HPS RWY 70W	Active	70	90435-67003	S14	CITY OF PAWTUCKET
0008	000	1	CLIFFORD	ST	149	Overhead	Distribution	Luminaire	LUM HPS RWY 70W	Active	70	90435-67003	S14	CITY OF PAWTUCKET
0010	000	1	CLIFFORD	ST	149	Overhead	Distribution	Luminaire	LUM HPS RWY 70W	Active	70	90435-67003	S14	CITY OF PAWTUCKET
0012	000	1	CLIFFORD	ST	149	Overhead	Distribution	Luminaire	LUM HPS RWY 70W	Active	70	90435-67003	S14	CITY OF PAWTUCKET
0014	000	1	CLIFFORD	ST	149	Overhead	Distribution	Luminaire	LUM HPS RWY 70W	Active	70	90435-67003	S14	CITY OF PAWTUCKET
0002	000	1	CLINTON	ST	150	Overhead	Distribution	Luminaire	LUM HPS RWY 70W	Active	70	90435-67003	S14	CITY OF PAWTUCKET
0004	000	1	CLINTON	ST	150	Overhead	Distribution	Luminaire	LUM HPS RWY 70W	Active	70	90435-67003	S14	CITY OF PAWTUCKET
0006	000	1	CLINTON	ST	150	Overhead	Distribution	Luminaire	LUM HPS RWY 70W	Active	70	90435-67003	S14	CITY OF PAWTUCKET
0003	000	1	CLOVER	ST	151	Overhead	Distribution	Luminaire	LUM HPS RWY 100W	Active	100	90435-67003	S14	CITY OF PAWTUCKET
0004	000	1	CLOVER	ST	151	Overhead	Distribution	Luminaire	LUM HPS RWY 50W	Active	50	90435-67003	S14	CITY OF PAWTUCKET
0001	000	1	CLYDE	ST	152	Overhead	Distribution	Luminaire	LUM HPS RWY 70W	Active	70	90435-67003	S14	CITY OF PAWTUCKET
0002	000	1	CLYDE	ST	152	Overhead	Distribution	Luminaire	LUM HPS RWY 70W	Active	70	90435-67003	S14	CITY OF PAWTUCKET
0006	000	1	CLYDE	ST	152	Overhead	Distribution	Luminaire	LUM HPS RWY 50W	Active	50	90435-67003	S14	CITY OF PAWTUCKET
0008	000	1	CLYDE	ST	152	Overhead	Distribution	Luminaire	LUM HPS RWY 50W	Active	50	90435-67003	S14	CITY OF PAWTUCKET
0010	000	1	CLYDE	ST	152	Overhead	Distribution	Luminaire	LUM HPS RWY 50W	Active	50	90435-67003	S14	CITY OF PAWTUCKET
0012	000	1	CLYDE	ST	152	Overhead	Distribution	Luminaire	LUM HPS RWY 50W	Active	50	90435-67003	S14	CITY OF PAWTUCKET
0014	000	1	CLYDE	ST	152	Overhead	Distribution	Luminaire	LUM HPS RWY 100W	Active	100	90435-67003	S14	CITY OF PAWTUCKET
0002	000	1	COLE	ST	154	Overhead	Distribution	Luminaire	LUM HPS RWY 70W	Active	70	90435-67003	S14	CITY OF PAWTUCKET
0004	000	1	COLE	ST	154	Overhead	Distribution	Luminaire	LUM HPS RWY 70W	Active	70	90435-67003	S14	CITY OF PAWTUCKET
0006	000	1	COLE	ST	154	Overhead	Distribution	Luminaire	LUM HPS RWY 70W	Active	70	90435-67003	S14	CITY OF PAWTUCKET
0007	000	1	COLE	ST	154	Overhead	Distribution	Luminaire	LUM HPS RWY 70W	Active	70	90435-67003	S14	CITY OF PAWTUCKET
0008	000	1	COLE	ST	154	Overhead	Distribution	Luminaire	LUM HPS RWY 70W	Active	70	90435-67003	S14	CITY OF PAWTUCKET
0009	000	1	COLE	ST	154	Overhead	Distribution	Luminaire	LUM HPS RWY 70W	Active	70	90435-67003	S14	CITY OF PAWTUCKET
0011	000	1	COLE	ST	154	Overhead	Distribution	Luminaire	LUM HPS RWY 70W	Active	70	90435-67003	S14	CITY OF PAWTUCKET
0012	000	1	COLE	ST	154	Overhead	Distribution	Luminaire	LUM HPS RWY 70W	Active	70	90435-67003	S14	CITY OF PAWTUCKET
0013	000	1	COLE	ST	154	Overhead	Distribution	Luminaire	LUM HPS RWY 70W	Active	70	90435-67003	S14	CITY OF PAWTUCKET
0014	000	1	COLE	ST	154	Overhead	Distribution	Luminaire	LUM HPS RWY 70W	Active	70	90435-67003	S14	CITY OF PAWTUCKET
0005	000	1	COLEMAN	ST	155	Overhead	Distribution	Luminaire	LUM HPS RWY 70W	Active	70	90435-67003	S14	CITY OF PAWTUCKET
0006	000	1	COLEMAN	ST	155	Overhead	Distribution	Luminaire	LUM HPS RWY 70W	Active	70	90435-67003	S14	CITY OF PAWTUCKET
0007	000	1	COLEMAN	ST	155	Overhead	Distribution	Luminaire	LUM HPS RWY 100W	Active	100	90435-67003	S14	CITY OF PAWTUCKET
0008	000	1	COLEMAN	ST	155	Overhead	Distribution	Luminaire	LUM HPS RWY 70W	Active	70	90435-67003	S14	CITY OF PAWTUCKET
0001	000	1	COLFAX	ST	156	Overhead	Distribution	Luminaire	LUM HPS RWY 100W	Active	100	90435-67003	S14	CITY OF PAWTUCKET
0001	000	1	COLLINS	AVE	157	Overhead	Distribution	Luminaire	LUM HPS RWY 70W	Active	70	90435-67003	S14	CITY OF PAWTUCKET
0003	000	1	COLLINS	AVE	157	Overhead	Distribution	Luminaire	LUM HPS RWY 70W	Active	70	90435-67003	S14	CITY OF PAWTUCKET
0005	000	1	COLLINS	AVE	157	Overhead	Distribution	Luminaire	LUM HPS RWY 100W	Active	100	90435-67003	S14	CITY OF PAWTUCKET
0003	000	1	COLUMBIA	AVE	158	Overhead	Distribution	Luminaire	LUM HPS RWY 70W	Active	70	90435-67003	S14	CITY OF PAWTUCKET
0006	000	1	COLUMBIA	AVE	158	Overhead	Distribution	Luminaire	LUM HPS RWY 70W	Active	70	90435-67003	S14	CITY OF PAWTUCKET
0008	000	1	COLUMBIA	AVE	158	Overhead	Distribution	Luminaire	LUM HPS RWY 70W	Active	70	90435-67003	S14	CITY OF PAWTUCKET
0010	000	1	COLUMBIA	AVE	158	Overhead	Distribution	Luminaire	LUM HPS RWY 70W	Active	70	90435-67003	S14	CITY OF PAWTUCKET
0011	001	1	COLUMBIA	AVE	158	Overhead	Distribution	Luminaire	LUM HPS RWY 70W	Active	70	90435-67003	S14	CITY OF PAWTUCKET
0012	000	1	COLUMBIA	AVE	158	Overhead	Distribution	Luminaire	LUM HPS RWY 70W	Active	70	90435-67003	S14	CITY OF PAWTUCKET
0013	000	1	COLUMBIA	AVE	158	Overhead	Distribution	Luminaire	LUM HPS RWY 70W	Active	70	90435-67003	S14	CITY OF PAWTUCKET
0016	000	1	COLUMBIA	AVE	158	Overhead	Distribution	Luminaire	LUM HPS RWY 70W	Active	70	90435-67003	S14	CITY OF PAWTUCKET
0017	000	1	COLUMBIA	AVE	158	Overhead	Distribution	Luminaire	LUM HPS RWY 70W	Active	70	90435-67003	S14	CITY OF PAWTUCKET
0019	000	1	COLUMBIA	AVE	158	Overhead	Distribution	Luminaire	LUM HPS RWY 70W	Active	70	90435-67003	S14	CITY OF PAWTUCKET
0021	000	1	COLUMBIA	AVE	158	Overhead	Distribution	Luminaire	LUM HPS RWY 100W	Active	100	90435-67003	S14	CITY OF PAWTUCKET
0002	000	1	COLUMBINE	AVE	159	Overhead	Distribution	Luminaire	LUM HPS RWY 70W	Active	70	90435-67003	S14	CITY OF PAWTUCKET
0004	000	1	COLUMBINE	AVE	159	Overhead	Distribution	Luminaire	LUM HPS RWY 70W	Active	70	90435-67003	S14	CITY OF PAWTUCKET
0006	000	1	COLUMBINE	AVE	159	Overhead	Distribution	Luminaire	LUM HPS RWY 70W	Active	70	90435-67003	S14	CITY OF PAWTUCKET
0008	000	1	COLUMBINE	AVE	159	Overhead	Distribution	Luminaire	LUM HPS RWY 70W	Active	70	90435-67003	S14	CITY OF PAWTUCKET
0010	000	1	COLUMBINE	AVE	159	Overhead	Distribution	Luminaire	LUM HPS RWY 70W	Active	70	90435-67003	S14	CITY OF PAWTUCKET
0013	000	1	COLUMBINE	AVE	159	Overhead	Distribution	Luminaire	LUM HPS RWY 70W	Active	70	90435-67003	S14	CITY OF PAWTUCKET
0015	000	1	COLUMBINE	AVE	159	Overhead	Distribution	Luminaire	LUM HPS RWY 70W	Active	70	90435-67003	S14	CITY OF PAWTUCKET
0017	000	1	COLUMBINE	AVE	159	Overhead	Distribution	Luminaire	LUM HPS RWY 70W	Active	70	90435-67003	S14	CITY OF PAWTUCKET

0020	000	1	COLUMBINE	AVE	159	Overhead	Distribution	Luminaire	LUM HPS RWY 70W	Active	70	90435-67003	S14	CITY OF PAWTUCKET
0022	000	1	COLUMBINE	AVE	159	Overhead	Distribution	Luminaire	LUM HPS RWY 100W	Active	100	90435-67003	S14	CITY OF PAWTUCKET
0001	000	1	COLUMBUS	AVE	160	Overhead	Distribution	Luminaire	LUM HPS RWY 250W	Active	250	90435-67003	S14	CITY OF PAWTUCKET
0005	000	1	COLUMBUS	AVE	160	Overhead	Distribution	Luminaire	LUM HPS RWY 100W	Active	100	90435-67003	S14	CITY OF PAWTUCKET
0006	000	1	COLUMBUS	AVE	160	Overhead	Distribution	Luminaire	LUM HPS RWY 100W	Active	100	90435-67003	S14	CITY OF PAWTUCKET
0007	000	1	COLUMBUS	AVE	160	Overhead	Distribution	Luminaire	LUM HPS RWY 100W	Active	100	90435-67003	S14	CITY OF PAWTUCKET
0009	000	1	COLUMBUS	AVE	160	Overhead	Distribution	Luminaire	LUM HPS RWY 100W	Active	100	90435-67003	S14	CITY OF PAWTUCKET
0010	000	1	COLUMBUS	AVE	160	Overhead	Distribution	Luminaire	LUM HPS RWY 100W	Active	100	90435-67003	S14	CITY OF PAWTUCKET
0011	000	1	COLUMBUS	AVE	160	Overhead	Distribution	Luminaire	LUM HPS RWY 100W	Active	100	90435-67003	S14	CITY OF PAWTUCKET
0012	001	1	COLUMBUS	AVE	160	Overhead	Distribution	Luminaire	LUM HPS RWY 100W	Active	100	90435-67003	S14	CITY OF PAWTUCKET
0013	001	1	COLUMBUS	AVE	160	Overhead	Distribution	Luminaire	LUM HPS RWY 100W	Active	100	90435-67003	S14	CITY OF PAWTUCKET
0015	000	1	COLUMBUS	AVE	160	Overhead	Distribution	Luminaire	LUM HPS RWY 100W	Active	100	90435-67003	S14	CITY OF PAWTUCKET
0016	000	1	COLUMBUS	AVE	160	Overhead	Distribution	Luminaire	LUM HPS RWY 100W	Active	100	90435-67003	S14	CITY OF PAWTUCKET
0018	000	1	COLUMBUS	AVE	160	Overhead	Distribution	Luminaire	LUM HPS RWY 100W	Active	100	90435-67003	S14	CITY OF PAWTUCKET
0019	000	1	COLUMBUS	AVE	160	Overhead	Distribution	Luminaire	LUM HPS RWY 100W	Active	100	90435-67003	S14	CITY OF PAWTUCKET
0020	000	1	COLUMBUS	AVE	160	Overhead	Distribution	Luminaire	LUM HPS RWY 100W	Active	100	90435-67003	S14	CITY OF PAWTUCKET
0021	000	1	COLUMBUS	AVE	160	Overhead	Distribution	Luminaire	LUM HPS RWY 100W	Active	100	90435-67003	S14	CITY OF PAWTUCKET
0022	001	1	COLUMBUS	AVE	160	Overhead	Distribution	Luminaire	LUM HPS RWY 100W	Active	100	90435-67003	S14	CITY OF PAWTUCKET
0024	000	1	COLUMBUS	AVE	160	Overhead	Distribution	Luminaire	LUM HPS RWY 100W	Active	100	90435-67003	S14	CITY OF PAWTUCKET
0025	000	1	COLUMBUS	AVE	160	Overhead	Distribution	Luminaire	LUM HPS RWY 100W	Active	100	90435-67003	S14	CITY OF PAWTUCKET
0026	000	1	COLUMBUS	AVE	160	Overhead	Distribution	Luminaire	LUM HPS RWY 100W	Active	100	90435-67003	S14	CITY OF PAWTUCKET
0027	000	1	COLUMBUS	AVE	160	Overhead	Distribution	Luminaire	LUM HPS RWY 100W	Active	100	90435-67003	S14	CITY OF PAWTUCKET
0028	000	1	COLUMBUS	AVE	160	Overhead	Distribution	Luminaire	LUM HPS RWY 100W	Active	100	90435-67003	S14	CITY OF PAWTUCKET
0028	030	1	COLUMBUS	AVE	160	Overhead	Distribution	Luminaire	LUM HPS RWY 70W	Active	70	90435-67003	S14	CITY OF PAWTUCKET
0029	000	1	COLUMBUS	AVE	160	Overhead	Distribution	Luminaire	LUM HPS RWY 100W	Active	100	90435-67003	S14	CITY OF PAWTUCKET
0030	000	1	COLUMBUS	AVE	160	Overhead	Distribution	Luminaire	LUM HPS RWY 100W	Active	100	90435-67003	S14	CITY OF PAWTUCKET
0031	000	1	COLUMBUS	AVE	160	Overhead	Distribution	Luminaire	LUM HPS RWY 100W	Active	100	90435-67003	S14	CITY OF PAWTUCKET
0032	000	1	COLUMBUS	AVE	160	Overhead	Distribution	Luminaire	LUM HPS RWY 100W	Active	100	90435-67003	S14	CITY OF PAWTUCKET
0033	000	1	COLUMBUS	AVE	160	Overhead	Distribution	Luminaire	LUM HPS RWY 100W	Active	100	90435-67003	S14	CITY OF PAWTUCKET
0034	000	1	COLUMBUS	AVE	160	Overhead	Distribution	Luminaire	LUM HPS RWY 100W	Active	100	90435-67003	S14	CITY OF PAWTUCKET
0035	000	1	COLUMBUS	AVE	160	Overhead	Distribution	Luminaire	LUM HPS RWY 100W	Active	100	90435-67003	S14	CITY OF PAWTUCKET
0036	000	1	COLUMBUS	AVE	160	Overhead	Distribution	Luminaire	LUM HPS RWY 100W	Active	100	90435-67003	S14	CITY OF PAWTUCKET
0037	000	1	COLUMBUS	AVE	160	Overhead	Distribution	Luminaire	LUM HPS RWY 100W	Active	100	90435-67003	S14	CITY OF PAWTUCKET
0038	000	1	COLUMBUS	AVE	160	Overhead	Distribution	Luminaire	LUM HPS RWY 100W	Active	100	90435-67003	S14	CITY OF PAWTUCKET
0039	000	1	COLUMBUS	AVE	160	Overhead	Distribution	Luminaire	LUM HPS RWY 100W	Active	100	90435-67003	S14	CITY OF PAWTUCKET
0040	000	1	COLUMBUS	AVE	160	Overhead	Distribution	Luminaire	LUM HPS RWY 100W	Active	100	90435-67003	S14	CITY OF PAWTUCKET
0041	000	1	COLUMBUS	AVE	160	Overhead	Distribution	Luminaire	LUM HPS RWY 100W	Active	100	90435-67003	S14	CITY OF PAWTUCKET
0042	000	1	COLUMBUS	AVE	160	Overhead	Distribution	Luminaire	LUM HPS RWY 100W	Active	100	90435-67003	S14	CITY OF PAWTUCKET
0043	000	1	COLUMBUS	AVE	160	Overhead	Distribution	Luminaire	LUM HPS RWY 100W	Active	100	90435-67003	S14	CITY OF PAWTUCKET
0044	000	1	COLUMBUS	AVE	160	Overhead	Distribution	Luminaire	LUM HPS RWY 100W	Active	100	90435-67003	S14	CITY OF PAWTUCKET
0045	000	1	COLUMBUS	AVE	160	Overhead	Distribution	Luminaire	LUM HPS RWY 100W	Active	100	90435-67003	S14	CITY OF PAWTUCKET
0046	000	1	COLUMBUS	AVE	160	Overhead	Distribution	Luminaire	LUM HPS RWY 100W	Active	100	90435-67003	S14	CITY OF PAWTUCKET
0047	000	1	COLUMBUS	AVE	160	Overhead	Distribution	Luminaire	LUM HPS RWY 100W	Active	100	90435-67003	S14	CITY OF PAWTUCKET
0048	000	1	COLUMBUS	AVE	160	Overhead	Distribution	Luminaire	LUM HPS RWY 100W	Active	100	90435-67003	S14	CITY OF PAWTUCKET
0048	001	1	COLUMBUS	AVE	160	Overhead	Distribution	Luminaire	LUM HPS RWY 100W	Active	100	90435-67003	S14	CITY OF PAWTUCKET
0049	000	1	COLUMBUS	AVE	160	Overhead	Distribution	Luminaire	LUM HPS RWY 100W	Active	100	90435-67003	S14	CITY OF PAWTUCKET
0050	000	1	COLUMBUS	AVE	160	Overhead	Distribution	Luminaire	LUM HPS RWY 100W	Active	100	90435-67003	S14	CITY OF PAWTUCKET
0051	000	1	COLUMBUS	AVE	160	Overhead	Distribution	Luminaire	LUM HPS RWY 100W	Active	100	90435-67003	S14	CITY OF PAWTUCKET
0052	000	1	COLUMBUS	AVE	160	Overhead	Distribution	Luminaire	LUM HPS RWY 100W	Active	100	90435-67003	S14	CITY OF PAWTUCKET
0053	000	1	COLUMBUS	AVE	160	Overhead	Distribution	Luminaire	LUM HPS RWY 100W	Active	100	90435-67003	S14	CITY OF PAWTUCKET
0054	000	1	COLUMBUS	AVE	160	Overhead	Distribution	Luminaire	LUM HPS RWY 100W	Active	100	90435-67003	S14	CITY OF PAWTUCKET
0002	000	1	COMMERCE	ST	162	Overhead	Distribution	Luminaire	LUM HPS RWY 100W	Active	100	90435-67003	S14	CITY OF PAWTUCKET
0003	000	1	COMMERCE	ST	162	Overhead	Distribution	Luminaire	LUM HPS RWY 100W	Active	100	90435-67003	S14	CITY OF PAWTUCKET
0004	000	1	COMMERCE	ST	162	Overhead	Distribution	Luminaire	LUM HPS RWY 100W	Active	100	90435-67003	S14	CITY OF PAWTUCKET
0005	000	1	COMMERCE	ST	162	Overhead	Distribution	Luminaire	LUM HPS RWY 100W	Active	100	90435-67003	S14	CITY OF PAWTUCKET
0002	000	1	COMSTOCK	ST	163	Overhead	Distribution	Luminaire	LUM HPS RWY 100W	Active	100	90435-67003	S14	CITY OF PAWTUCKET
0004	000	1	COMSTOCK	ST	163	Overhead	Distribution	Luminaire	LUM HPS RWY 70W	Active	70	90435-67003	S14	CITY OF PAWTUCKET
0005	000	1	COMSTOCK	ST	163	Overhead	Distribution	Luminaire	LUM HPS RWY 100W	Active	100	90435-67003	S14	CITY OF PAWTUCKET
0007	000	1	COMSTOCK	ST	163	Overhead	Distribution	Luminaire	LUM HPS RWY 100W	Active	100	90435-67003	S14	CITY OF PAWTUCKET
0008	000	1	COMSTOCK	ST	163	Overhead	Distribution	Luminaire	LUM HPS RWY 100W	Active	100	90435-67003	S14	CITY OF PAWTUCKET
0009	000	1	COMSTOCK	ST	163	Overhead	Distribution	Luminaire	LUM HPS RWY 100W	Active	100	90435-67003	S14	CITY OF PAWTUCKET
0002	000	1	CONANT	ST	164	Overhead	Distribution	Luminaire	LUM HPS RWY 100W	Active	100	90435-67003	S14	CITY OF PAWTUCKET
0005	000	1	CONANT	ST	164	Overhead	Distribution	Luminaire	LUM HPS RWY 100W	Active	100	90435-67003	S14	CITY OF PAWTUCKET

0008	000	1	CONANT	ST	164	Overhead	Distribution	Luminaire	LUM HPS RWY 100W	Active	100	90435-67003	S14	CITY OF PAWTUCKET
0011	000	1	CONANT	ST	164	Overhead	Distribution	Luminaire	LUM HPS RWY 100W	Active	100	90435-67003	S14	CITY OF PAWTUCKET
0012	000	1	CONANT	ST	164	Overhead	Distribution	Luminaire	LUM HPS RWY 100W	Active	100	90435-67003	S14	CITY OF PAWTUCKET
0013	000	1	CONANT	ST	164	Overhead	Distribution	Luminaire	LUM HPS RWY 250W	Active	250	90435-67003	S14	CITY OF PAWTUCKET
0014	000	1	CONANT	ST	164	Overhead	Distribution	Luminaire	LUM HPS RWY 100W	Active	100	90435-67003	S14	CITY OF PAWTUCKET
0018	000	1	CONANT	ST	164	Overhead	Distribution	Luminaire	LUM HPS RWY 100W	Active	100	90435-67003	S14	CITY OF PAWTUCKET
0020	000	1	CONANT	ST	164	Overhead	Distribution	Luminaire	LUM HPS RWY 70W	Active	70	90435-67003	S14	CITY OF PAWTUCKET
0021	003	1	CONANT	ST	164	Overhead	Distribution	Luminaire	LUM HPS RWY 70W	Active	70	90435-67003	S14	CITY OF PAWTUCKET
0022	000	1	CONANT	ST	164	Overhead	Distribution	Luminaire	LUM HPS RWY 100W	Active	100	90435-67003	S14	CITY OF PAWTUCKET
0026	000	1	CONANT	ST	164	Overhead	Distribution	Luminaire	LUM HPS RWY 100W	Active	100	90435-67003	S14	CITY OF PAWTUCKET
0027	000	1	CONANT	ST	164	Overhead	Distribution	Luminaire	LUM HPS RWY 100W	Active	100	90435-67003	S14	CITY OF PAWTUCKET
0001	001	1	CONCORD	ST	165	Overhead	Distribution	Luminaire	LUM HPS RWY 70W	Active	70	90435-67003	S14	CITY OF PAWTUCKET
0003	000	1	CONCORD	ST	165	Overhead	Distribution	Luminaire	LUM HPS RWY 70W	Active	70	90435-67003	S14	CITY OF PAWTUCKET
0004	000	1	CONCORD	ST	165	Overhead	Distribution	Luminaire	LUM HPS RWY 70W	Active	70	90435-67003	S14	CITY OF PAWTUCKET
0007	000	1	CONCORD	ST	165	Overhead	Distribution	Luminaire	LUM HPS RWY 70W	Active	70	90435-67003	S14	CITY OF PAWTUCKET
0008	000	1	CONCORD	ST	165	Overhead	Distribution	Luminaire	LUM HPS RWY 100W	Active	100	90435-67003	S14	CITY OF PAWTUCKET
0002	000	2	CONGRESS	ST	166	Overhead	Distribution	Luminaire	LUM HPS RWY 70W	Active	70	90435-67003	S14	CITY OF PAWTUCKET
0004	000	2	CONGRESS	ST	166	Overhead	Distribution	Luminaire	LUM HPS RWY 70W	Active	70	90435-67003	S14	CITY OF PAWTUCKET
0001	000	1	CONSOLATION	AVE	167	Overhead	Distribution	Luminaire	LUM HPS RWY 70W	Active	70	90435-67003	S14	CITY OF PAWTUCKET
0002	000	1	COOKE	ST	168	Overhead	Distribution	Luminaire	LUM HPS RWY 70W	Active	70	90435-67003	S14	CITY OF PAWTUCKET
0002	000	2	COOKE	ST	168	Overhead	Distribution	Luminaire	LUM HPS RWY 70W	Active	70	90435-67003	S14	CITY OF PAWTUCKET
0003	000	1	COOKE	ST	168	Overhead	Distribution	Luminaire	LUM HPS RWY 70W	Active	70	90435-67003	S14	CITY OF PAWTUCKET
0003	000	2	COOKE	ST	168	Overhead	Distribution	Luminaire	LUM HPS RWY 70W	Active	70	90435-67003	S14	CITY OF PAWTUCKET
0004	000	1	COOKE	ST	168	Overhead	Distribution	Luminaire	LUM HPS RWY 70W	Active	70	90435-67003	S14	CITY OF PAWTUCKET
0006	000	1	COOPER	ST	169	Overhead	Distribution	Luminaire	LUM HPS RWY 70W	Active	70	90435-67003	S14	CITY OF PAWTUCKET
0008	000	1	COOPER	ST	169	Overhead	Distribution	Luminaire	LUM HPS RWY 70W	Active	70	90435-67003	S14	CITY OF PAWTUCKET
0010	000	1	COOPER	ST	169	Overhead	Distribution	Luminaire	LUM HPS RWY 70W	Active	70	90435-67003	S14	CITY OF PAWTUCKET
0001	000	1	CORNELL	AVE	170	Overhead	Distribution	Luminaire	LUM HPS RWY 70W	Active	70	90435-67003	S14	CITY OF PAWTUCKET
0003	000	1	CORNELL	AVE	170	Overhead	Distribution	Luminaire	LUM HPS RWY 70W	Active	70	90435-67003	S14	CITY OF PAWTUCKET
0004	000	1	CORNELL	AVE	170	Overhead	Distribution	Luminaire	LUM HPS RWY 70W	Active	70	90435-67003	S14	CITY OF PAWTUCKET
0001	000	1	CORRENTE	CT	171	Overhead	Distribution	Luminaire	LUM HPS RWY 70W	Active	70	90435-67003	S14	CITY OF PAWTUCKET
0001	000	1	CORRENTE	AVE	172	Overhead	Distribution	Luminaire	LUM HPS RWY 70W	Active	70	90435-67003	S14	CITY OF PAWTUCKET
0002	000	1	CORRENTE	CT	171	Overhead	Distribution	Luminaire	LUM HPS RWY 70W	Active	70	90435-67003	S14	CITY OF PAWTUCKET
0003	000	1	CORRENTE	AVE	172	Overhead	Distribution	Luminaire	LUM HPS RWY 70W	Active	70	90435-67003	S14	CITY OF PAWTUCKET
0005	000	1	CORRENTE	AVE	172	Overhead	Distribution	Luminaire	LUM HPS RWY 70W	Active	70	90435-67003	S14	CITY OF PAWTUCKET
0010	002	1	COTTAGE	ST	173	Overhead	Distribution	Luminaire	LUM HPS RWY 100W	Active	100	90435-67003	S14	CITY OF PAWTUCKET
0011	000	1	COTTAGE	ST	173	Overhead	Distribution	Luminaire	LUM HPS RWY 100W	Active	100	90435-67003	S14	CITY OF PAWTUCKET
0012	000	1	COTTAGE	ST	173	Overhead	Distribution	Luminaire	LUM HPS RWY 100W	Active	100	90435-67003	S14	CITY OF PAWTUCKET
0013	000	1	COTTAGE	ST	173	Overhead	Distribution	Luminaire	LUM HPS RWY 250W	Active	250	90435-67003	S14	CITY OF PAWTUCKET
0013	001	1	COTTAGE	ST	173	Overhead	Distribution	Luminaire	LUM HPS RWY 100W	Active	100	90435-67003	S14	CITY OF PAWTUCKET
0016	000	1	COTTAGE	ST	173	Overhead	Distribution	Luminaire	LUM HPS RWY 100W	Active	100	90435-67003	S14	CITY OF PAWTUCKET
0018	000	1	COTTAGE	ST	173	Overhead	Distribution	Luminaire	LUM HPS RWY 100W	Active	100	90435-67003	S14	CITY OF PAWTUCKET
0020	000	1	COTTAGE	ST	173	Overhead	Distribution	Luminaire	LUM HPS RWY 100W	Active	100	90435-67003	S14	CITY OF PAWTUCKET
0021	000	1	COTTAGE	ST	173	Overhead	Distribution	Luminaire	LUM HPS RWY 100W	Active	100	90435-67003	S14	CITY OF PAWTUCKET
0022	000	1	COTTAGE	ST	173	Overhead	Distribution	Luminaire	LUM HPS RWY 100W	Active	100	90435-67003	S14	CITY OF PAWTUCKET
0023	000	1	COTTAGE	ST	173	Overhead	Distribution	Luminaire	LUM HPS RWY 100W	Active	100	90435-67003	S14	CITY OF PAWTUCKET
0024	000	1	COTTAGE	ST	173	Overhead	Distribution	Luminaire	LUM HPS RWY 100W	Active	100	90435-67003	S14	CITY OF PAWTUCKET
0025	000	1	COTTAGE	ST	173	Overhead	Distribution	Luminaire	LUM HPS RWY 100W	Active	100	90435-67003	S14	CITY OF PAWTUCKET
0026	000	1	COTTAGE	ST	173	Overhead	Distribution	Luminaire	LUM HPS RWY 100W	Active	100	90435-67003	S14	CITY OF PAWTUCKET
0027	000	1	COTTAGE	ST	173	Overhead	Distribution	Luminaire	LUM HPS RWY 100W	Active	100	90435-67003	S14	CITY OF PAWTUCKET
0029	000	1	COTTAGE	ST	173	Overhead	Distribution	Luminaire	LUM HPS RWY 100W	Active	100	90435-67003	S14	CITY OF PAWTUCKET
0030	000	1	COTTAGE	ST	173	Overhead	Distribution	Luminaire	LUM HPS RWY 100W	Active	100	90435-67003	S14	CITY OF PAWTUCKET
0031	000	1	COTTAGE	ST	173	Overhead	Distribution	Luminaire	LUM HPS RWY 100W	Active	100	90435-67003	S14	CITY OF PAWTUCKET
0032	000	1	COTTAGE	ST	173	Overhead	Distribution	Luminaire	LUM HPS RWY 100W	Active	100	90435-67003	S14	CITY OF PAWTUCKET
0033	000	1	COTTAGE	ST	173	Overhead	Distribution	Luminaire	LUM HPS RWY 100W	Active	100	90435-67003	S14	CITY OF PAWTUCKET
0034	000	1	COTTAGE	ST	173	Overhead	Distribution	Luminaire	LUM HPS RWY 100W	Active	100	90435-67003	S14	CITY OF PAWTUCKET
0040	000	1	COTTAGE	ST	173	Overhead	Distribution	Luminaire	LUM HPS RWY 70W	Active	70	90435-67003	S14	CITY OF PAWTUCKET
0041	000	1	COTTAGE	ST	173	Overhead	Distribution	Luminaire	LUM HPS RWY 70W	Active	70	90435-67003	S14	CITY OF PAWTUCKET
0042	000	1	COTTAGE	ST	173	Overhead	Distribution	Luminaire	LUM HPS RWY 70W	Active	70	90435-67003	S14	CITY OF PAWTUCKET
0044	000	1	COTTAGE	ST	173	Overhead	Distribution	Luminaire	LUM HPS RWY 70W	Active	70	90435-67003	S14	CITY OF PAWTUCKET
0047	000	1	COTTAGE	ST	173	Overhead	Distribution	Luminaire	LUM HPS RWY 100W	Active	100	90435-67003	S14	CITY OF PAWTUCKET
0060	001	1	COTTAGE	ST	173	Overhead	Distribution	Luminaire	LUM HPS RWY 70W	Active	70	90435-67003	S14	CITY OF PAWTUCKET
0062	000	1	COTTAGE	ST	173	Overhead	Distribution	Luminaire	LUM HPS RWY 70W	Active	70	90435-67003	S14	CITY OF PAWTUCKET

0064	000	1	COTTAGE	ST	173	Overhead	Distribution	Luminaire	LUM HPS RWY 100W	Active	100	90435-67003	S14	CITY OF PAWTUCKET
0065	000	1	COTTAGE	ST	173	Overhead	Distribution	Luminaire	LUM HPS RWY 100W	Active	100	90435-67003	S14	CITY OF PAWTUCKET
0067	000	1	COTTAGE	ST	173	Overhead	Distribution	Luminaire	LUM HPS RWY 100W	Active	100	90435-67003	S14	CITY OF PAWTUCKET
0068	000	1	COTTAGE	ST	173	Overhead	Distribution	Luminaire	LUM HPS RWY 100W	Active	100	90435-67003	S14	CITY OF PAWTUCKET
0069	000	1	COTTAGE	ST	173	Overhead	Distribution	Luminaire	LUM HPS RWY 70W	Active	70	90435-67003	S14	CITY OF PAWTUCKET
0071	000	1	COTTAGE	ST	173	Overhead	Distribution	Luminaire	LUM HPS RWY 70W	Active	70	90435-67003	S14	CITY OF PAWTUCKET
0073	000	1	COTTAGE	ST	173	Overhead	Distribution	Luminaire	LUM HPS FLD 250W	Active	250	28129-70006	S14	PAWTUCKET SCH DEPT
0074	000	1	COTTAGE	ST	173	Overhead	Distribution	Luminaire	LUM HPS RWY 100W	Active	100	90435-67003	S14	CITY OF PAWTUCKET
0076	000	1	COTTAGE	ST	173	Overhead	Distribution	Luminaire	LUM HPS RWY 100W	Active	100	90435-67003	S14	CITY OF PAWTUCKET
0079	000	1	COTTAGE	ST	173	Overhead	Distribution	Luminaire	LUM HPS RWY 70W	Active	70	90435-67003	S14	CITY OF PAWTUCKET
0081	000	1	COTTAGE	ST	173	Overhead	Distribution	Luminaire	LUM HPS RWY 70W	Active	70	90435-67003	S14	CITY OF PAWTUCKET
0083	000	1	COTTAGE	ST	173	Overhead	Distribution	Luminaire	LUM HPS RWY 70W	Active	70	90435-67003	S14	CITY OF PAWTUCKET
0085	000	1	COTTAGE	ST	173	Overhead	Distribution	Luminaire	LUM HPS RWY 70W	Active	70	90435-67003	S14	CITY OF PAWTUCKET
0087	000	1	COTTAGE	ST	173	Overhead	Distribution	Luminaire	LUM HPS RWY 100W	Active	100	90435-67003	S14	CITY OF PAWTUCKET
0088	001	1	COTTAGE	ST	173	Overhead	Distribution	Luminaire	LUM HPS RWY 100W	Active	100	90435-67003	S14	CITY OF PAWTUCKET
0089	000	1	COTTAGE	ST	173	Overhead	Distribution	Luminaire	LUM HPS RWY 70W	Active	70	90435-67003	S14	CITY OF PAWTUCKET
0090	000	1	COTTAGE	ST	173	Overhead	Distribution	Luminaire	LUM HPS RWY 100W	Active	100	90435-67003	S14	CITY OF PAWTUCKET
0091	000	1	COTTAGE	ST	173	Overhead	Distribution	Luminaire	LUM HPS RWY 100W	Active	100	90435-67003	S14	CITY OF PAWTUCKET
0094	000	1	COTTAGE	ST	173	Overhead	Distribution	Luminaire	LUM HPS RWY 70W	Active	70	90435-67003	S14	CITY OF PAWTUCKET
0097	000	1	COTTAGE	ST	173	Overhead	Distribution	Luminaire	LUM HPS RWY 100W	Active	100	90435-67003	S14	CITY OF PAWTUCKET
0099	000	1	COTTAGE	ST	173	Overhead	Distribution	Luminaire	LUM HPS RWY 100W	Active	100	90435-67003	S14	CITY OF PAWTUCKET
0101	000	1	COTTAGE	ST	173	Overhead	Distribution	Luminaire	LUM HPS RWY 100W	Active	100	90435-67003	S14	CITY OF PAWTUCKET
0103	000	1	COTTAGE	ST	173	Overhead	Distribution	Luminaire	LUM HPS RWY 100W	Active	100	90435-67003	S14	CITY OF PAWTUCKET
0106	000	1	COTTAGE	ST	173	Overhead	Distribution	Luminaire	LUM HPS RWY 100W	Active	100	90435-67003	S14	CITY OF PAWTUCKET
0109	000	1	COTTAGE	ST	173	Overhead	Distribution	Luminaire	LUM HPS RWY 100W	Active	100	90435-67003	S14	CITY OF PAWTUCKET
0110	000	1	COTTAGE	ST	173	Overhead	Distribution	Luminaire	LUM HPS RWY 100W	Active	100	90435-67003	S14	CITY OF PAWTUCKET
0112	000	1	COTTAGE	ST	173	Overhead	Distribution	Luminaire	LUM HPS RWY 100W	Active	100	90435-67003	S14	CITY OF PAWTUCKET
0114	000	1	COTTAGE	ST	173	Overhead	Distribution	Luminaire	LUM HPS RWY 100W	Active	100	90435-67003	S14	CITY OF PAWTUCKET
0117	000	1	COTTAGE	ST	173	Overhead	Distribution	Luminaire	LUM HPS RWY 100W	Active	100	90435-67003	S14	CITY OF PAWTUCKET
0119	000	1	COTTAGE	ST	173	Overhead	Distribution	Luminaire	LUM HPS RWY 100W	Active	100	90435-67003	S14	CITY OF PAWTUCKET
0121	000	1	COTTAGE	ST	173	Overhead	Distribution	Luminaire	LUM HPS RWY 100W	Active	100	90435-67003	S14	CITY OF PAWTUCKET
0123	000	1	COTTAGE	ST	173	Overhead	Distribution	Luminaire	LUM HPS RWY 70W	Active	70	90435-67003	S14	CITY OF PAWTUCKET
0124	000	1	COTTAGE	ST	173	Overhead	Distribution	Luminaire	LUM HPS RWY 70W	Active	70	90435-67003	S14	CITY OF PAWTUCKET
0125	000	1	COTTAGE	ST	173	Overhead	Distribution	Luminaire	LUM HPS RWY 70W	Active	70	90435-67003	S14	CITY OF PAWTUCKET
0126	000	1	COTTAGE	ST	173	Overhead	Distribution	Luminaire	LUM HPS RWY 70W	Active	70	90435-67003	S14	CITY OF PAWTUCKET
0002	000	1	COURT	ST	175	Overhead	Distribution	Luminaire	LUM HPS RWY 70W	Active	70	90435-67003	S14	CITY OF PAWTUCKET
0004	000	1	COURT	ST	175	Overhead	Distribution	Luminaire	LUM HPS RWY 70W	Active	70	90435-67003	S14	CITY OF PAWTUCKET
0001	000	1	COURTNEY	AVE	176	Overhead	Distribution	Luminaire	LUM HPS RWY 70W	Active	70	90435-67003	S14	CITY OF PAWTUCKET
0001	000	1	COURTNEY	ST	177	Overhead	Distribution	Luminaire	LUM HPS RWY 70W	Active	70	90435-67003	S14	CITY OF PAWTUCKET
0003	000	1	COURTNEY	AVE	176	Overhead	Distribution	Luminaire	LUM HPS RWY 70W	Active	70	90435-67003	S14	CITY OF PAWTUCKET
0005	000	1	COURTNEY	AVE	176	Overhead	Distribution	Luminaire	LUM HPS RWY 70W	Active	70	90435-67003	S14	CITY OF PAWTUCKET
0009	000	1	COURTNEY	AVE	176	Overhead	Distribution	Luminaire	LUM HPS RWY 70W	Active	70	90435-67003	S14	CITY OF PAWTUCKET
0011	000	1	COURTNEY	AVE	176	Overhead	Distribution	Luminaire	LUM HPS RWY 70W	Active	70	90435-67003	S14	CITY OF PAWTUCKET
0017	000	1	COURTNEY	AVE	176	Overhead	Distribution	Luminaire	LUM HPS RWY 70W	Active	70	90435-67003	S14	CITY OF PAWTUCKET
0010	000	1	COVE	ST	178	Overhead	Distribution	Luminaire	LUM HPS RWY 70W	Active	70	90435-67003	S14	CITY OF PAWTUCKET
0013	000	1	COVE	ST	178	Overhead	Distribution	Luminaire	LUM HPS RWY 70W	Active	70	90435-67003	S14	CITY OF PAWTUCKET
0001	000	1	COYLE	AVE	179	Overhead	Distribution	Luminaire	LUM HPS RWY 70W	Active	70	90435-67003	S14	CITY OF PAWTUCKET
0001	001	1	COYLE	AVE	179	Overhead	Distribution	Luminaire	LUM HPS RWY 70W	Active	70	90435-67003	S14	CITY OF PAWTUCKET
0003	000	1	COYLE	AVE	179	Overhead	Distribution	Luminaire	LUM HPS RWY 70W	Active	70	90435-67003	S14	CITY OF PAWTUCKET
0007	000	1	COYLE	AVE	179	Overhead	Distribution	Luminaire	LUM HPS RWY 70W	Active	70	90435-67003	S14	CITY OF PAWTUCKET
0009	000	1	COYLE	AVE	179	Overhead	Distribution	Luminaire	LUM HPS RWY 100W	Active	100	90435-67003	S14	CITY OF PAWTUCKET
0010	030	1	COYLE	AVE	179	Overhead	Distribution	Luminaire	LUM HPS RWY 100W	Active	100	90435-67003	S14	CITY OF PAWTUCKET
0012	000	1	COYLE	AVE	179	Overhead	Distribution	Luminaire	LUM HPS RWY 70W	Active	70	90435-67003	S14	CITY OF PAWTUCKET
0014	000	1	COYLE	AVE	179	Overhead	Distribution	Luminaire	LUM HPS RWY 70W	Active	70	90435-67003	S14	CITY OF PAWTUCKET
0016	000	1	COYLE	AVE	179	Overhead	Distribution	Luminaire	LUM HPS RWY 70W	Active	70	90435-67003	S14	CITY OF PAWTUCKET
0018	000	1	COYLE	AVE	179	Overhead	Distribution	Luminaire	LUM HPS RWY 70W	Active	70	90435-67003	S14	CITY OF PAWTUCKET
0019	000	1	COYLE	AVE	179	Overhead	Distribution	Luminaire	LUM HPS RWY 70W	Active	70	90435-67003	S14	CITY OF PAWTUCKET
0021	000	1	COYLE	AVE	179	Overhead	Distribution	Luminaire	LUM HPS RWY 70W	Active	70	90435-67003	S14	CITY OF PAWTUCKET
0023	000	1	COYLE	AVE	179	Overhead	Distribution	Luminaire	LUM HPS RWY 70W	Active	70	90435-67003	S14	CITY OF PAWTUCKET
0025	000	1	COYLE	AVE	179	Overhead	Distribution	Luminaire	LUM HPS RWY 70W	Active	70	90435-67003	S14	CITY OF PAWTUCKET
0003	000	1	CRANE	ST	180	Overhead	Distribution	Luminaire	LUM HPS RWY 70W	Active	70	90435-67003	S14	CITY OF PAWTUCKET
0001	000	1	CRESCENT	RD	181	Overhead	Distribution	Luminaire	LUM HPS RWY 100W	Active	100	90435-67003	S14	CITY OF PAWTUCKET
0002	000	1	CRESCENT	RD	181	Overhead	Distribution	Luminaire	LUM HPS RWY 100W	Active	100	90435-67003	S14	CITY OF PAWTUCKET

0004	000	1	CRESCENT	RD	181	Overhead	Distribution	Luminaire	LUM HPS RWY 70W	Active	70	90435-67003	S14	CITY OF PAWTUCKET
0006	000	1	CRESCENT	RD	181	Overhead	Distribution	Luminaire	LUM HPS RWY 70W	Active	70	90435-67003	S14	CITY OF PAWTUCKET
0008	000	1	CRESCENT	RD	181	Overhead	Distribution	Luminaire	LUM HPS RWY 70W	Active	70	90435-67003	S14	CITY OF PAWTUCKET
0010	000	1	CRESCENT	RD	181	Overhead	Distribution	Luminaire	LUM HPS RWY 70W	Active	70	90435-67003	S14	CITY OF PAWTUCKET
0012	000	1	CRESCENT	RD	181	Overhead	Distribution	Luminaire	LUM HPS RWY 70W	Active	70	90435-67003	S14	CITY OF PAWTUCKET
0014	000	1	CRESCENT	RD	181	Overhead	Distribution	Luminaire	LUM HPS RWY 100W	Active	100	90435-67003	S14	CITY OF PAWTUCKET
0017	000	1	CRESCENT	RD	181	Overhead	Distribution	Luminaire	LUM HPS RWY 100W	Active	100	90435-67003	S14	CITY OF PAWTUCKET
0018	001	1	CRESCENT	RD	181	Overhead	Distribution	Luminaire	LUM HPS RWY 100W	Active	100	90435-67003	S14	CITY OF PAWTUCKET
0002	000	1	CREST	DR	182	Overhead	Distribution	Luminaire	LUM HPS RWY 100W	Active	100	90435-67003	S14	CITY OF PAWTUCKET
0003	000	1	CREST	DR	182	Overhead	Distribution	Luminaire	LUM HPS RWY 100W	Active	100	90435-67003	S14	CITY OF PAWTUCKET
0004	000	1	CREST	DR	182	Overhead	Distribution	Luminaire	LUM HPS RWY 100W	Active	100	90435-67003	S14	CITY OF PAWTUCKET
0005	000	1	CREST	DR	182	Overhead	Distribution	Luminaire	LUM HPS RWY 100W	Active	100	90435-67003	S14	CITY OF PAWTUCKET
0006	000	1	CREST	DR	182	Overhead	Distribution	Luminaire	LUM HPS RWY 100W	Active	100	90435-67003	S14	CITY OF PAWTUCKET
0008	000	1	CREST	DR	182	Overhead	Distribution	Luminaire	LUM HPS RWY 100W	Active	100	90435-67003	S14	CITY OF PAWTUCKET
0010	000	1	CREST	DR	182	Overhead	Distribution	Luminaire	LUM HPS RWY 100W	Active	100	90435-67003	S14	CITY OF PAWTUCKET
0011	000	1	CREST	DR	182	Overhead	Distribution	Luminaire	LUM HPS RWY 100W	Active	100	90435-67003	S14	CITY OF PAWTUCKET
0001	000	1	CRYSTAL	PL	183	Overhead	Distribution	Luminaire	LUM HPS RWY 70W	Active	70	90435-67003	S14	CITY OF PAWTUCKET
0002	000	1	CRYSTAL	PL	183	Overhead	Distribution	Luminaire	LUM HPS RWY 70W	Active	70	90435-67003	S14	CITY OF PAWTUCKET
0004	000	1	CRYSTAL	PL	183	Overhead	Distribution	Luminaire	LUM HPS RWY 70W	Active	70	90435-67003	S14	CITY OF PAWTUCKET
0002	000	1	CUMBERLAND	ST	184	Overhead	Distribution	Luminaire	LUM HPS RWY 70W	Active	70	90435-67003	S14	CITY OF PAWTUCKET
0004	000	1	CUMBERLAND	ST	184	Overhead	Distribution	Luminaire	LUM HPS RWY 70W	Active	70	90435-67003	S14	CITY OF PAWTUCKET
0001	000	1	CUSHMAN	ST	185	Overhead	Distribution	Luminaire	LUM HPS RWY 250W	Active	250	90435-67003	S14	CITY OF PAWTUCKET
0003	000	1	CUSHMAN	ST	185	Overhead	Distribution	Luminaire	LUM HPS RWY 70W	Active	70	90435-67003	S14	CITY OF PAWTUCKET
0008	000	1	CUSHMAN	ST	185	Overhead	Distribution	Luminaire	LUM HPS RWY 70W	Active	70	90435-67003	S14	CITY OF PAWTUCKET
0010	000	1	CUSHMAN	ST	185	Overhead	Distribution	Luminaire	LUM HPS RWY 70W	Active	70	90435-67003	S14	CITY OF PAWTUCKET
0002	000	1	CUTE	ST	186	Overhead	Distribution	Luminaire	LUM HPS RWY 70W	Active	70	90435-67003	S14	CITY OF PAWTUCKET
0004	000	1	CUTE	ST	186	Overhead	Distribution	Luminaire	LUM HPS RWY 70W	Active	70	90435-67003	S14	CITY OF PAWTUCKET
0001	000	1	DAGGETT	AVE	187	Overhead	Distribution	Luminaire	LUM HPS RWY 250W	Active	250	90435-67003	S14	CITY OF PAWTUCKET
0002	003	1	DAGGETT	AVE	187	Overhead	Distribution	Luminaire	LUM HPS RWY 250W	Active	250	90435-67003	S14	CITY OF PAWTUCKET
0003	000	1	DAGGETT	AVE	187	Overhead	Distribution	Luminaire	LUM HPS RWY 250W	Active	250	90435-67003	S14	CITY OF PAWTUCKET
0004	001	1	DAGGETT	AVE	187	Overhead	Distribution	Luminaire	LUM HPS RWY 250W	Active	250	90435-67003	S14	CITY OF PAWTUCKET
0005	000	1	DAGGETT	AVE	187	Overhead	Distribution	Luminaire	LUM HPS RWY 250W	Active	250	90435-67003	S14	CITY OF PAWTUCKET
0006	001	1	DAGGETT	AVE	187	Overhead	Distribution	Luminaire	LUM HPS RWY 250W	Active	250	90435-67003	S14	CITY OF PAWTUCKET
0008	000	1	DAGGETT	AVE	187	Overhead	Distribution	Luminaire	LUM HPS RWY 250W	Active	250	90435-67003	S14	CITY OF PAWTUCKET
0009	000	1	DAGGETT	AVE	187	Overhead	Distribution	Luminaire	LUM HPS RWY 250W	Active	250	90435-67003	S14	CITY OF PAWTUCKET
0010	001	1	DAGGETT	AVE	187	Overhead	Distribution	Luminaire	LUM HPS RWY 250W	Active	250	90435-67003	S14	CITY OF PAWTUCKET
0011	000	1	DAGGETT	AVE	187	Overhead	Distribution	Luminaire	LUM HPS RWY 250W	Active	250	90435-67003	S14	CITY OF PAWTUCKET
0012	001	1	DAGGETT	AVE	187	Overhead	Distribution	Luminaire	LUM HPS RWY 250W	Active	250	90435-67003	S14	CITY OF PAWTUCKET
0014	000	1	DAGGETT	AVE	187	Overhead	Distribution	Luminaire	LUM HPS RWY 250W	Active	250	90435-67003	S14	CITY OF PAWTUCKET
0015	002	1	DAGGETT	AVE	187	Overhead	Distribution	Luminaire	LUM HPS RWY 250W	Active	250	90435-67003	S14	CITY OF PAWTUCKET
0017	000	1	DAGGETT	AVE	187	Overhead	Distribution	Luminaire	LUM HPS RWY 250W	Active	250	90435-67003	S14	CITY OF PAWTUCKET
0018	001	1	DAGGETT	AVE	187	Overhead	Distribution	Luminaire	LUM HPS RWY 250W	Active	250	90435-67003	S14	CITY OF PAWTUCKET
0020	000	1	DAGGETT	AVE	187	Overhead	Distribution	Luminaire	LUM HPS RWY 250W	Active	250	90435-67003	S14	CITY OF PAWTUCKET
0021	000	1	DAGGETT	AVE	187	Overhead	Distribution	Luminaire	LUM HPS RWY 250W	Active	250	90435-67003	S14	CITY OF PAWTUCKET
0022	084	1	DAGGETT	AVE	187	Overhead	Distribution	Luminaire	LUM HPS RWY 250W	Active	250	90435-67003	S14	CITY OF PAWTUCKET
0023	000	1	DAGGETT	AVE	187	Overhead	Distribution	Luminaire	LUM HPS RWY 250W	Active	250	90435-67003	S14	CITY OF PAWTUCKET
0024	001	1	DAGGETT	AVE	187	Overhead	Distribution	Luminaire	LUM HPS RWY 250W	Active	250	90435-67003	S14	CITY OF PAWTUCKET
0025	000	1	DAGGETT	AVE	187	Overhead	Distribution	Luminaire	LUM HPS RWY 250W	Active	250	90435-67003	S14	CITY OF PAWTUCKET
0026	001	1	DAGGETT	AVE	187	Overhead	Distribution	Luminaire	LUM HPS RWY 250W	Active	250	90435-67003	S14	CITY OF PAWTUCKET
0028	000	1	DAGGETT	AVE	187	Overhead	Distribution	Luminaire	LUM HPS RWY 250W	Active	250	90435-67003	S14	CITY OF PAWTUCKET
0034	001	1	DAGGETT	AVE	187	Overhead	Distribution	Luminaire	LUM HPS RWY 250W	Active	250	90435-67003	S14	CITY OF PAWTUCKET
0036	000	1	DAGGETT	AVE	187	Overhead	Distribution	Luminaire	LUM HPS RWY 250W	Active	250	90435-67003	S14	CITY OF PAWTUCKET
0036	021	0	DAGGETT	AVE	187	Overhead	Streetlighting	Pole	POLE - WOOD	Active	0	3371-64002	S14	CITY OF PAWTUCKET
0036	021	1	DAGGETT	AVE	187	Overhead	Streetlighting	Luminaire	LUM HPS FLD 400W	Active	400	3371-64002	S14	CITY OF PAWTUCKET
0036	021	2	DAGGETT	AVE	187	Overhead	Streetlighting	Luminaire	LUM HPS FLD 400W	Active	400	3371-64002	S14	CITY OF PAWTUCKET
0037	001	1	DAGGETT	AVE	187	Overhead	Distribution	Luminaire	LUM HPS RWY 250W	Active	250	90435-67003	S14	CITY OF PAWTUCKET
0039	000	1	DAGGETT	AVE	187	Overhead	Distribution	Luminaire	LUM HPS RWY 250W	Active	250	90435-67003	S14	CITY OF PAWTUCKET
0040	000	1	DAGGETT	AVE	187	Overhead	Distribution	Luminaire	LUM HPS RWY 250W	Active	250	90435-67003	S14	CITY OF PAWTUCKET
0041	001	1	DAGGETT	AVE	187	Overhead	Distribution	Luminaire	LUM HPS RWY 250W	Active	250	90435-67003	S14	CITY OF PAWTUCKET
0041	011	1	DAGGETT	AVE	187	Overhead	Distribution	Luminaire	LUM HPS FLD 250W	Active	250	3371-64002	S14	CITY OF PAWTUCKET
0043	000	1	DAGGETT	AVE	187	Overhead	Distribution	Luminaire	LUM HPS RWY 250W	Active	250	90435-67003	S14	CITY OF PAWTUCKET
0044	002	1	DAGGETT	AVE	187	Overhead	Distribution	Luminaire	LUM HPS RWY 250W	Active	250	90435-67003	S14	CITY OF PAWTUCKET
0046	000	1	DAGGETT	AVE	187	Overhead	Distribution	Luminaire	LUM HPS RWY 250W	Active	250	90435-67003	S14	CITY OF PAWTUCKET

0047	001	1	DAGGETT	AVE	187	Overhead	Distribution	Luminaire	LUM HPS RWY 250W	Active	250	90435-67003	S14	CITY OF PAWTUCKET
0049	000	1	DAGGETT	AVE	187	Overhead	Distribution	Luminaire	LUM HPS RWY 250W	Active	250	90435-67003	S14	CITY OF PAWTUCKET
0050	001	1	DAGGETT	AVE	187	Overhead	Distribution	Luminaire	LUM HPS RWY 250W	Active	250	90435-67003	S14	CITY OF PAWTUCKET
0052	000	1	DAGGETT	AVE	187	Overhead	Distribution	Luminaire	LUM HPS RWY 70W	Active	70	90435-67003	S14	CITY OF PAWTUCKET
0053	000	1	DAGGETT	AVE	187	Overhead	Distribution	Luminaire	LUM HPS RWY 70W	Active	70	90435-67003	S14	CITY OF PAWTUCKET
0056	000	1	DAGGETT	AVE	187	Overhead	Distribution	Luminaire	LUM HPS RWY 70W	Active	70	90435-67003	S14	CITY OF PAWTUCKET
0058	000	1	DAGGETT	AVE	187	Overhead	Distribution	Luminaire	LUM HPS RWY 70W	Active	70	90435-67003	S14	CITY OF PAWTUCKET
0001	000	1	DALE	ST	188	Overhead	Distribution	Luminaire	LUM HPS RWY 70W	Active	70	90435-67003	S14	CITY OF PAWTUCKET
0002	000	1	DALE	ST	188	Overhead	Distribution	Luminaire	LUM HPS RWY 70W	Active	70	90435-67003	S14	CITY OF PAWTUCKET
0003	000	1	DALE	ST	188	Overhead	Distribution	Luminaire	LUM HPS RWY 70W	Active	70	90435-67003	S14	CITY OF PAWTUCKET
0004	000	1	DALE	ST	188	Overhead	Distribution	Luminaire	LUM HPS RWY 70W	Active	70	90435-67003	S14	CITY OF PAWTUCKET
0001	000	1	DALEY	CT	189	Overhead	Distribution	Luminaire	LUM HPS RWY 70W	Active	70	90435-67003	S14	CITY OF PAWTUCKET
0001	000	1	DANIELS	ST	190	Overhead	Distribution	Luminaire	LUM HPS RWY 70W	Active	70	90435-67003	S14	CITY OF PAWTUCKET
0002	000	1	DANIELS	ST	190	Overhead	Distribution	Luminaire	LUM HPS RWY 70W	Active	70	90435-67003	S14	CITY OF PAWTUCKET
0003	000	1	DANIELS	ST	190	Overhead	Distribution	Luminaire	LUM HPS RWY 70W	Active	70	90435-67003	S14	CITY OF PAWTUCKET
0004	000	1	DANIELS	ST	190	Overhead	Distribution	Luminaire	LUM HPS RWY 70W	Active	70	90435-67003	S14	CITY OF PAWTUCKET
0006	000	1	DANIELS	ST	190	Overhead	Distribution	Luminaire	LUM HPS RWY 70W	Active	70	90435-67003	S14	CITY OF PAWTUCKET
0008	000	1	DANIELS	ST	190	Overhead	Distribution	Luminaire	LUM HPS RWY 70W	Active	70	90435-67003	S14	CITY OF PAWTUCKET
0010	000	1	DANIELS	ST	190	Overhead	Distribution	Luminaire	LUM HPS RWY 70W	Active	70	90435-67003	S14	CITY OF PAWTUCKET
0012	000	1	DANIELS	ST	190	Overhead	Distribution	Luminaire	LUM HPS FLD 250W	Active	250	90435-65009	S14	PAWTUCKET SCHOOL DEP
0012	000	2	DANIELS	ST	190	Overhead	Distribution	Luminaire	LUM HPS RWY 70W	Active	70	90435-67003	S14	CITY OF PAWTUCKET
0005	000	1	DARLINGDALE	AVE	191	Overhead	Distribution	Luminaire	LUM HPS RWY 70W	Active	70	90435-67003	S14	CITY OF PAWTUCKET
0007	000	1	DARLINGDALE	AVE	191	Overhead	Distribution	Luminaire	LUM HPS RWY 70W	Active	70	90435-67003	S14	CITY OF PAWTUCKET
0010	000	1	DARLINGDALE	AVE	191	Overhead	Distribution	Luminaire	LUM HPS RWY 70W	Active	70	90435-67003	S14	CITY OF PAWTUCKET
0012	000	1	DARLINGDALE	AVE	191	Overhead	Distribution	Luminaire	LUM HPS RWY 70W	Active	70	90435-67003	S14	CITY OF PAWTUCKET
0014	000	1	DARLINGDALE	AVE	191	Overhead	Distribution	Luminaire	LUM HPS RWY 70W	Active	70	90435-67003	S14	CITY OF PAWTUCKET
0015	000	1	DARLINGDALE	AVE	191	Overhead	Distribution	Luminaire	LUM HPS RWY 70W	Active	70	90435-67003	S14	CITY OF PAWTUCKET
0018	000	1	DARLINGDALE	AVE	191	Overhead	Distribution	Luminaire	LUM HPS RWY 70W	Active	70	90435-67003	S14	CITY OF PAWTUCKET
0019	000	1	DARLINGDALE	AVE	191	Overhead	Distribution	Luminaire	LUM HPS RWY 70W	Active	70	90435-67003	S14	CITY OF PAWTUCKET
0003	000	1	DARROW	ST	192	Overhead	Distribution	Luminaire	LUM HPS RWY 70W	Active	70	90435-67003	S14	CITY OF PAWTUCKET
0004	000	1	DARROW	ST	192	Overhead	Distribution	Luminaire	LUM HPS RWY 70W	Active	70	90435-67003	S14	CITY OF PAWTUCKET
0002	000	1	DARTMOUTH	ST	193	Overhead	Distribution	Luminaire	LUM HPS RWY 70W	Active	70	90435-67003	S14	CITY OF PAWTUCKET
0003	000	1	DARTMOUTH	ST	193	Overhead	Distribution	Luminaire	LUM HPS RWY 70W	Active	70	90435-67003	S14	CITY OF PAWTUCKET
0006	000	1	DARTMOUTH	ST	193	Overhead	Distribution	Luminaire	LUM HPS RWY 70W	Active	70	90435-67003	S14	CITY OF PAWTUCKET
0011	000	1	DARTMOUTH	ST	193	Overhead	Distribution	Luminaire	LUM HPS RWY 70W	Active	70	90435-67003	S14	CITY OF PAWTUCKET
0013	000	1	DARTMOUTH	ST	193	Overhead	Distribution	Luminaire	LUM MV RWY 175W	Active	175	90435-67003	S14	CITY OF PAWTUCKET
0015	000	1	DARTMOUTH	ST	193	Overhead	Distribution	Luminaire	LUM HPS RWY 70W	Active	70	90435-67003	S14	CITY OF PAWTUCKET
0017	000	1	DARTMOUTH	ST	193	Overhead	Distribution	Luminaire	LUM HPS RWY 70W	Active	70	90435-67003	S14	CITY OF PAWTUCKET
0019	000	1	DARTMOUTH	ST	193	Overhead	Distribution	Luminaire	LUM HPS RWY 70W	Active	70	90435-67003	S14	CITY OF PAWTUCKET
0002	000	1	DAVIS	ST	194	Overhead	Distribution	Luminaire	LUM HPS RWY 70W	Active	70	90435-67003	S14	CITY OF PAWTUCKET
0004	000	1	DAVIS	ST	194	Overhead	Distribution	Luminaire	LUM HPS RWY 70W	Active	70	90435-67003	S14	CITY OF PAWTUCKET
0001	001	1	DAWSON	ST	195	Overhead	Distribution	Luminaire	LUM HPS RWY 70W	Active	70	90435-67003	S14	CITY OF PAWTUCKET
0003	000	1	DAWSON	ST	195	Overhead	Distribution	Luminaire	LUM HPS RWY 70W	Active	70	90435-67003	S14	CITY OF PAWTUCKET
0006	000	1	DAWSON	ST	195	Overhead	Distribution	Luminaire	LUM HPS RWY 70W	Active	70	90435-67003	S14	CITY OF PAWTUCKET
0008	000	1	DAWSON	ST	195	Overhead	Distribution	Luminaire	LUM HPS RWY 70W	Active	70	90435-67003	S14	CITY OF PAWTUCKET
0010	000	1	DAWSON	ST	195	Overhead	Distribution	Luminaire	LUM HPS RWY 70W	Active	70	90435-67003	S14	CITY OF PAWTUCKET
0011	000	1	DAWSON	ST	195	Overhead	Distribution	Luminaire	LUM HPS RWY 70W	Active	70	90435-67003	S14	CITY OF PAWTUCKET
0002	000	1	DAY	ST	196	Overhead	Distribution	Luminaire	LUM HPS RWY 70W	Active	70	90435-67003	S14	CITY OF PAWTUCKET
0004	000	1	DAY	ST	196	Overhead	Distribution	Luminaire	LUM HPS RWY 70W	Active	70	90435-67003	S14	CITY OF PAWTUCKET
0006	000	1	DAY	ST	196	Overhead	Distribution	Luminaire	LUM HPS RWY 70W	Active	70	90435-67003	S14	CITY OF PAWTUCKET
0003	000	1	DEAN	ST	197	Overhead	Distribution	Luminaire	LUM HPS RWY 70W	Active	70	90435-67003	S14	CITY OF PAWTUCKET
0005	000	1	DEAN	ST	197	Overhead	Distribution	Luminaire	LUM HPS RWY 70W	Active	70	90435-67003	S14	CITY OF PAWTUCKET
0007	000	1	DEAN	ST	197	Overhead	Distribution	Luminaire	LUM HPS RWY 70W	Active	70	90435-67003	S14	CITY OF PAWTUCKET
0010	000	1	DEAN	ST	197	Overhead	Distribution	Luminaire	LUM HPS RWY 70W	Active	70	90435-67003	S14	CITY OF PAWTUCKET
0001	000	1	DELANEY	ST	198	Overhead	Distribution	Luminaire	LUM HPS RWY 70W	Active	70	90435-67003	S14	CITY OF PAWTUCKET
0003	000	1	DELANEY	ST	198	Overhead	Distribution	Luminaire	LUM HPS RWY 70W	Active	70	90435-67003	S14	CITY OF PAWTUCKET
0001	000	1	DELTA	DR	199	Overhead	Distribution	Luminaire	LUM HPS RWY 100W	Active	100	90435-67003	S14	CITY OF PAWTUCKET
0003	000	1	DELTA	DR	199	Overhead	Distribution	Luminaire	LUM HPS RWY 100W	Active	100	90435-67003	S14	CITY OF PAWTUCKET
0004	000	1	DELTA	DR	199	Overhead	Distribution	Luminaire	LUM HPS RWY 100W	Active	100	90435-67003	S14	CITY OF PAWTUCKET
0005	000	1	DELTA	DR	199	Overhead	Distribution	Luminaire	LUM HPS RWY 100W	Active	100	90435-67003	S14	CITY OF PAWTUCKET
0006	000	1	DELTA	DR	199	Overhead	Distribution	Luminaire	LUM HPS RWY 100W	Active	100	90435-67003	S14	CITY OF PAWTUCKET
0007	000	1	DELTA	DR	199	Overhead	Distribution	Luminaire	LUM HPS RWY 100W	Active	100	90435-67003	S14	CITY OF PAWTUCKET
0001	001	1	DEMING	ST	200	Overhead	Distribution	Luminaire	LUM HPS RWY 100W	Active	100	90435-67003	S14	CITY OF PAWTUCKET

0002	000	1	DEMING	ST	200	Overhead	Distribution	Luminaire	LUM HPS RWY 70W	Active	70	90435-67003	S14	CITY OF PAWTUCKET
0003	000	1	DEMING	ST	200	Overhead	Distribution	Luminaire	LUM HPS RWY 70W	Active	70	90435-67003	S14	CITY OF PAWTUCKET
0005	000	1	DENVER	ST	201	Overhead	Distribution	Luminaire	LUM HPS RWY 70W	Active	70	90435-67003	S14	CITY OF PAWTUCKET
0006	000	1	DENVER	ST	201	Overhead	Distribution	Luminaire	LUM HPS RWY 100W	Active	100	90435-67003	S14	CITY OF PAWTUCKET
0011	000	1	DENVER	ST	201	Overhead	Distribution	Luminaire	LUM HPS RWY 70W	Active	70	90435-67003	S14	CITY OF PAWTUCKET
0013	000	1	DENVER	ST	201	Overhead	Distribution	Luminaire	LUM HPS RWY 70W	Active	70	90435-67003	S14	CITY OF PAWTUCKET
0013	000	2	DENVER	ST	201	Overhead	Distribution	Luminaire	LUM HPS RWY 70W	Active	70	90435-67003	S14	CITY OF PAWTUCKET
0016	000	1	DENVER	ST	201	Overhead	Distribution	Luminaire	LUM HPS RWY 70W	Active	70	90435-67003	S14	CITY OF PAWTUCKET
0018	000	1	DENVER	ST	201	Overhead	Distribution	Luminaire	LUM HPS RWY 70W	Active	70	90435-67003	S14	CITY OF PAWTUCKET
0001	000	1	DERBY	ST	202	Overhead	Distribution	Luminaire	LUM HPS RWY 70W	Active	70	90435-67003	S14	CITY OF PAWTUCKET
0003	000	1	DERBY	ST	202	Overhead	Distribution	Luminaire	LUM HPS RWY 70W	Active	70	90435-67003	S14	CITY OF PAWTUCKET
0005	000	1	DERBY	ST	202	Overhead	Distribution	Luminaire	LUM HPS RWY 70W	Active	70	90435-67003	S14	CITY OF PAWTUCKET
0002	000	1	DESMARAIS	AVE	203	Overhead	Distribution	Luminaire	LUM HPS RWY 70W	Active	70	90435-67003	S14	CITY OF PAWTUCKET
0005	000	1	DESMARAIS	AVE	203	Overhead	Distribution	Luminaire	LUM HPS RWY 70W	Active	70	90435-67003	S14	CITY OF PAWTUCKET
0006	000	1	DESMARAIS	AVE	203	Overhead	Distribution	Luminaire	LUM HPS RWY 70W	Active	70	90435-67003	S14	CITY OF PAWTUCKET
0002	000	1	DEWEY	AVE	204	Overhead	Distribution	Luminaire	LUM HPS RWY 70W	Active	70	90435-67003	S14	CITY OF PAWTUCKET
0004	000	1	DEWEY	AVE	204	Overhead	Distribution	Luminaire	LUM HPS RWY 70W	Active	70	90435-67003	S14	CITY OF PAWTUCKET
0006	000	1	DEWEY	AVE	204	Overhead	Distribution	Luminaire	LUM HPS RWY 70W	Active	70	90435-67003	S14	CITY OF PAWTUCKET
0008	000	1	DEWEY	AVE	204	Overhead	Distribution	Luminaire	LUM HPS RWY 70W	Active	70	90435-67003	S14	CITY OF PAWTUCKET
0010	000	1	DEWEY	AVE	204	Overhead	Distribution	Luminaire	LUM HPS RWY 70W	Active	70	90435-67003	S14	CITY OF PAWTUCKET
0012	000	1	DEWEY	AVE	204	Overhead	Distribution	Luminaire	LUM HPS RWY 70W	Active	70	90435-67003	S14	CITY OF PAWTUCKET
0014	000	1	DEWEY	AVE	204	Overhead	Distribution	Luminaire	LUM HPS RWY 70W	Active	70	90435-67003	S14	CITY OF PAWTUCKET
0001	000	1	DEXTER	CT	205	Overhead	Distribution	Luminaire	LUM HPS RWY 70W	Active	70	90435-67003	S14	CITY OF PAWTUCKET
0001	000	1	DEXTER	ST	206	Overhead	Distribution	Luminaire	LUM HPS FLD 400W	Active	400	90435-67003	S14	CITY OF PAWTUCKET
0001	000	2	DEXTER	ST	206	Overhead	Distribution	Luminaire	LUM HPS FLD 400W	Active	400	90435-67003	S14	CITY OF PAWTUCKET
0001	000	3	DEXTER	ST	206	Overhead	Distribution	Luminaire	LUM HPS RWY 400W	Active	400	90435-67003	S14	CITY OF PAWTUCKET
0002	000	1	DEXTER	CT	205	Overhead	Distribution	Luminaire	LUM HPS RWY 100W	Active	100	90435-67003	S14	CITY OF PAWTUCKET
0003	000	1	DEXTER	CT	205	Overhead	Distribution	Luminaire	LUM HPS RWY 250W	Active	250	90435-67003	S14	CITY OF PAWTUCKET
0004	000	1	DEXTER	CT	205	Overhead	Distribution	Luminaire	LUM HPS RWY 100W	Active	100	90435-67003	S14	CITY OF PAWTUCKET
0004	001	1	DEXTER	ST	206	Overhead	Distribution	Luminaire	LUM HPS RWY 250W	Active	250	90435-67003	S14	CITY OF PAWTUCKET
0007	000	1	DEXTER	ST	206	Overhead	Distribution	Luminaire	LUM HPS RWY 250W	Active	250	90435-67003	S14	CITY OF PAWTUCKET
0013	000	1	DEXTER	ST	206	Overhead	Distribution	Luminaire	LUM HPS RWY 250W	Active	250	90435-67003	S14	CITY OF PAWTUCKET
0015	000	1	DEXTER	ST	206	Overhead	Distribution	Luminaire	LUM HPS RWY 250W	Active	250	90435-67003	S14	CITY OF PAWTUCKET
0017	000	1	DEXTER	ST	206	Overhead	Distribution	Luminaire	LUM HPS RWY 250W	Active	250	90435-67003	S14	CITY OF PAWTUCKET
0024	000	1	DEXTER	ST	206	Overhead	Distribution	Luminaire	LUM HPS RWY 250W	Active	250	90435-67003	S14	CITY OF PAWTUCKET
0027	000	1	DEXTER	ST	206	Overhead	Distribution	Luminaire	LUM HPS RWY 250W	Active	250	90435-67003	S14	CITY OF PAWTUCKET
0029	000	1	DEXTER	ST	206	Overhead	Distribution	Luminaire	LUM HPS RWY 250W	Active	250	90435-67003	S14	CITY OF PAWTUCKET
0031	000	1	DEXTER	ST	206	Overhead	Distribution	Luminaire	LUM HPS RWY 250W	Active	250	90435-67003	S14	CITY OF PAWTUCKET
0035	000	1	DEXTER	ST	206	Overhead	Distribution	Luminaire	LUM HPS RWY 250W	Active	250	90435-67003	S14	CITY OF PAWTUCKET
0037	000	1	DEXTER	ST	206	Overhead	Distribution	Luminaire	LUM HPS RWY 250W	Active	250	90435-67003	S14	CITY OF PAWTUCKET
0039	001	1	DEXTER	ST	206	Overhead	Distribution	Luminaire	LUM HPS RWY 250W	Active	250	90435-67003	S14	CITY OF PAWTUCKET
0043	000	1	DEXTER	ST	206	Overhead	Distribution	Luminaire	LUM HPS RWY 250W	Active	250	90435-67003	S14	CITY OF PAWTUCKET
0047	000	1	DEXTER	ST	206	Overhead	Distribution	Luminaire	LUM HPS RWY 250W	Active	250	90435-67003	S14	CITY OF PAWTUCKET
0048	000	1	DEXTER	ST	206	Overhead	Distribution	Luminaire	LUM HPS RWY 250W	Active	250	90435-67003	S14	CITY OF PAWTUCKET
0002	000	1	DIANA	DR	207	Overhead	Distribution	Luminaire	LUM HPS RWY 70W	Active	70	90435-67003	S14	CITY OF PAWTUCKET
0004	000	1	DIANA	DR	207	Overhead	Distribution	Luminaire	LUM HPS RWY 70W	Active	70	90435-67003	S14	CITY OF PAWTUCKET
0001	000	1	DICKENS	ST	208	Overhead	Distribution	Luminaire	LUM HPS RWY 50W	Active	50	90435-67003	S14	CITY OF PAWTUCKET
0002	000	1	DICKENS	ST	208	Overhead	Distribution	Luminaire	LUM HPS RWY 70W	Active	70	90435-67003	S14	CITY OF PAWTUCKET
0004	000	1	DICKENS	ST	208	Overhead	Distribution	Luminaire	LUM HPS RWY 70W	Active	70	90435-67003	S14	CITY OF PAWTUCKET
0006	000	1	DICKENS	ST	208	Overhead	Distribution	Luminaire	LUM HPS RWY 70W	Active	70	90435-67003	S14	CITY OF PAWTUCKET
0008	000	1	DICKENS	ST	208	Overhead	Distribution	Luminaire	LUM HPS RWY 70W	Active	70	90435-67003	S14	CITY OF PAWTUCKET
0012	000	1	DICKENS	ST	208	Overhead	Distribution	Luminaire	LUM HPS RWY 70W	Active	70	90435-67003	S14	CITY OF PAWTUCKET
0005	001	0	DIVISION	ST	209	Underground	Streetlighting	Pole	POLE METAL =>25FT	Active	0	90435-67003	S14	CITY OF PAWTUCKET
0005	001	1	DIVISION	ST	209	Underground	Streetlighting	Luminaire	LUM HPS RWY 250W	Active	250	90435-67003	S14	CITY OF PAWTUCKET
0006	000	0	DIVISION	ST	209	Underground	Streetlighting	Pole	POLE METAL =>25FT	Active	0	90435-67003	S14	CITY OF PAWTUCKET
0006	000	1	DIVISION	ST	209	Underground	Streetlighting	Luminaire	LUM HPS RWY 250W	Active	250	90435-67003	S14	CITY OF PAWTUCKET
0006	001	1	DIVISION	ST	209	Overhead	Distribution	Luminaire	LUM HPS RWY 100W	Active	100	90435-67003	S14	CITY OF PAWTUCKET
0007	000	0	DIVISION	ST	209	Underground	Streetlighting	Pole	POLE METAL =>25FT	Active	0	90435-67003	S14	CITY OF PAWTUCKET
0007	000	1	DIVISION	ST	209	Underground	Streetlighting	Luminaire	LUM HPS RWY 250W	Active	250	90435-67003	S14	CITY OF PAWTUCKET
0007	001	0	DIVISION	ST	209	Underground	Streetlighting	Pole	POLE METAL =>25FT	Active	0	90435-67003	S14	CITY OF PAWTUCKET
0007	001	1	DIVISION	ST	209	Underground	Streetlighting	Luminaire	LUM HPS RWY 250W	Active	250	90435-67003	S14	CITY OF PAWTUCKET
0008	000	0	DIVISION	ST	209	Underground	Streetlighting	Pole	POLE METAL =>25FT	Active	0	90435-67003	S14	CITY OF PAWTUCKET
0008	000	1	DIVISION	ST	209	Underground	Streetlighting	Luminaire	LUM HPS RWY 250W	Active	250	90435-67003	S14	CITY OF PAWTUCKET

0008	001	0	DIVISION	ST	209	Underground	Streetlighting	Pole	POLE METAL =>25FT	Active	0	90435-67003	S14	CITY OF PAWTUCKET
0008	001	1	DIVISION	ST	209	Underground	Streetlighting	Luminaire	LUM HPS RWY 250W	Active	250	90435-67003	S14	CITY OF PAWTUCKET
0009	000	0	DIVISION	ST	209	Underground	Streetlighting	Pole	POLE METAL =>25FT	Active	0	90435-67003	S14	CITY OF PAWTUCKET
0009	000	1	DIVISION	ST	209	Underground	Streetlighting	Luminaire	LUM HPS RWY 250W	Active	250	90435-67003	S14	CITY OF PAWTUCKET
0010	000	0	DIVISION	ST	209	Underground	Streetlighting	Pole	POLE METAL =>25FT	Active	0	90435-67003	S14	CITY OF PAWTUCKET
0010	000	1	DIVISION	ST	209	Underground	Streetlighting	Luminaire	LUM HPS RWY 250W	Active	250	90435-67003	S14	CITY OF PAWTUCKET
0011	000	1	DIVISION	ST	209	Overhead	Distribution	Luminaire	LUM HPS RWY 250W	Active	250	90435-67003	S14	CITY OF PAWTUCKET
0012	000	1	DIVISION	ST	209	Overhead	Distribution	Luminaire	LUM HPS RWY 250W	Active	250	90435-67003	S14	CITY OF PAWTUCKET
0013	000	1	DIVISION	ST	209	Overhead	Distribution	Luminaire	LUM HPS RWY 250W	Active	250	90435-67003	S14	CITY OF PAWTUCKET
0014	000	1	DIVISION	ST	209	Overhead	Distribution	Luminaire	LUM HPS RWY 250W	Active	250	90435-67003	S14	CITY OF PAWTUCKET
0016	000	1	DIVISION	ST	209	Overhead	Distribution	Luminaire	LUM HPS RWY 100W	Active	100	90435-67003	S14	CITY OF PAWTUCKET
0016	000	2	DIVISION	ST	209	Overhead	Distribution	Luminaire	LUM HPS RWY 250W	Active	250	90435-67003	S14	CITY OF PAWTUCKET
0017	000	1	DIVISION	ST	209	Overhead	Distribution	Luminaire	LUM HPS RWY 100W	Active	100	90435-67003	S14	CITY OF PAWTUCKET
0018	000	1	DIVISION	ST	209	Overhead	Distribution	Luminaire	LUM HPS RWY 100W	Active	100	90435-67003	S14	CITY OF PAWTUCKET
0019	000	1	DIVISION	ST	209	Overhead	Distribution	Luminaire	LUM HPS RWY 100W	Active	100	90435-67003	S14	CITY OF PAWTUCKET
0020	000	1	DIVISION	ST	209	Overhead	Distribution	Luminaire	LUM HPS RWY 100W	Active	100	90435-67003	S14	CITY OF PAWTUCKET
0021	000	1	DIVISION	ST	209	Overhead	Distribution	Luminaire	LUM HPS RWY 100W	Active	100	90435-67003	S14	CITY OF PAWTUCKET
0022	000	1	DIVISION	ST	209	Overhead	Distribution	Luminaire	LUM HPS RWY 100W	Active	100	90435-67003	S14	CITY OF PAWTUCKET
0023	000	1	DIVISION	ST	209	Overhead	Distribution	Luminaire	LUM HPS RWY 100W	Active	100	90435-67003	S14	CITY OF PAWTUCKET
0024	000	1	DIVISION	ST	209	Overhead	Distribution	Luminaire	LUM HPS RWY 100W	Active	100	90435-67003	S14	CITY OF PAWTUCKET
0026	000	1	DIVISION	ST	209	Overhead	Distribution	Luminaire	LUM HPS RWY 100W	Active	100	90435-67003	S14	CITY OF PAWTUCKET
0028	000	1	DIVISION	ST	209	Overhead	Distribution	Luminaire	LUM HPS RWY 100W	Active	100	90435-67003	S14	CITY OF PAWTUCKET
0029	000	1	DIVISION	ST	209	Overhead	Distribution	Luminaire	LUM HPS RWY 100W	Active	100	90435-67003	S14	CITY OF PAWTUCKET
0030	000	1	DIVISION	ST	209	Overhead	Distribution	Luminaire	LUM HPS RWY 100W	Active	100	90435-67003	S14	CITY OF PAWTUCKET
0031	000	1	DIVISION	ST	209	Overhead	Distribution	Luminaire	LUM HPS RWY 100W	Active	100	90435-67003	S14	CITY OF PAWTUCKET
0032	000	1	DIVISION	ST	209	Overhead	Distribution	Luminaire	LUM HPS RWY 100W	Active	100	90435-67003	S14	CITY OF PAWTUCKET
0034	000	1	DIVISION	ST	209	Overhead	Distribution	Luminaire	LUM HPS RWY 100W	Active	100	90435-67003	S14	CITY OF PAWTUCKET
0035	000	1	DIVISION	ST	209	Overhead	Distribution	Luminaire	LUM HPS RWY 100W	Active	100	90435-67003	S14	CITY OF PAWTUCKET
0036	000	1	DIVISION	ST	209	Overhead	Distribution	Luminaire	LUM HPS RWY 100W	Active	100	90435-67003	S14	CITY OF PAWTUCKET
0037	000	1	DIVISION	ST	209	Overhead	Distribution	Luminaire	LUM HPS RWY 100W	Active	100	90435-67003	S14	CITY OF PAWTUCKET
0038	000	1	DIVISION	ST	209	Overhead	Distribution	Luminaire	LUM HPS RWY 100W	Active	100	90435-67003	S14	CITY OF PAWTUCKET
0039	000	1	DIVISION	ST	209	Overhead	Distribution	Luminaire	LUM HPS RWY 100W	Active	100	90435-67003	S14	CITY OF PAWTUCKET
0040	000	1	DIVISION	ST	209	Overhead	Distribution	Luminaire	LUM HPS RWY 100W	Active	100	90435-67003	S14	CITY OF PAWTUCKET
0042	000	1	DIVISION	ST	209	Overhead	Distribution	Luminaire	LUM HPS FLD 400W	Active	400	28129-71003	S14	PAWTUCKET SCH DEPT
0042	000	2	DIVISION	ST	209	Overhead	Distribution	Luminaire	LUM HPS RWY 100W	Active	100	90435-67003	S14	CITY OF PAWTUCKET
0043	000	1	DIVISION	ST	209	Overhead	Distribution	Luminaire	LUM HPS FLD 400W	Active	400	28129-71003	S14	PAWTUCKET SCH DEPT
0044	000	1	DIVISION	ST	209	Overhead	Distribution	Luminaire	LUM HPS RWY 100W	Active	100	90435-67003	S14	CITY OF PAWTUCKET
0045	000	1	DIVISION	ST	209	Overhead	Distribution	Luminaire	LUM HPS RWY 100W	Active	100	90435-67003	S14	CITY OF PAWTUCKET
0046	000	1	DIVISION	ST	209	Overhead	Distribution	Luminaire	LUM HPS RWY 100W	Active	100	90435-67003	S14	CITY OF PAWTUCKET
0048	000	1	DIVISION	ST	209	Overhead	Distribution	Luminaire	LUM HPS RWY 100W	Active	100	90435-67003	S14	CITY OF PAWTUCKET
0048	000	2	DIVISION	ST	209	Overhead	Distribution	Luminaire	LUM HPS FLD 400W	Active	400	90435-67003	S14	CITY OF PAWTUCKET
0049	000	1	DIVISION	ST	209	Overhead	Distribution	Luminaire	LUM HPS RWY 100W	Active	100	90435-67003	S14	CITY OF PAWTUCKET
0050	000	1	DIVISION	ST	209	Overhead	Distribution	Luminaire	LUM HPS RWY 100W	Active	100	90435-67003	S14	CITY OF PAWTUCKET
0052	000	1	DIVISION	ST	209	Overhead	Distribution	Luminaire	LUM HPS RWY 100W	Active	100	90435-67003	S14	CITY OF PAWTUCKET
0054	000	1	DIVISION	ST	209	Overhead	Distribution	Luminaire	LUM HPS RWY 100W	Active	100	90435-67003	S14	CITY OF PAWTUCKET
0056	000	1	DIVISION	ST	209	Overhead	Distribution	Luminaire	LUM HPS RWY 100W	Active	100	90435-67003	S14	CITY OF PAWTUCKET
0057	000	1	DIVISION	ST	209	Overhead	Distribution	Luminaire	LUM HPS RWY 100W	Active	100	90435-67003	S14	CITY OF PAWTUCKET
0001	000	1	DIX	AVE	210	Overhead	Distribution	Luminaire	LUM HPS RWY 100W	Active	100	90435-67003	S14	CITY OF PAWTUCKET
0004	000	1	DIX	AVE	210	Overhead	Distribution	Luminaire	LUM HPS RWY 70W	Active	70	90435-67003	S14	CITY OF PAWTUCKET
0006	000	1	DIX	AVE	210	Overhead	Distribution	Luminaire	LUM HPS RWY 70W	Active	70	90435-67003	S14	CITY OF PAWTUCKET
0007	000	1	DIX	AVE	210	Overhead	Distribution	Luminaire	LUM HPS RWY 70W	Active	70	90435-67003	S14	CITY OF PAWTUCKET
0009	000	1	DIX	AVE	210	Overhead	Distribution	Luminaire	LUM HPS RWY 70W	Active	70	90435-67003	S14	CITY OF PAWTUCKET
0010	000	1	DIX	AVE	210	Overhead	Distribution	Luminaire	LUM HPS RWY 70W	Active	70	90435-67003	S14	CITY OF PAWTUCKET
0003	000	1	DODGE	ST	211	Overhead	Distribution	Luminaire	LUM HPS RWY 70W	Active	70	90435-67003	S14	CITY OF PAWTUCKET
0005	000	1	DODGE	ST	211	Overhead	Distribution	Luminaire	LUM HPS RWY 70W	Active	70	90435-67003	S14	CITY OF PAWTUCKET
0006	000	1	DODGE	ST	211	Overhead	Distribution	Luminaire	LUM HPS RWY 70W	Active	70	90435-67003	S14	CITY OF PAWTUCKET
0007	000	1	DODGE	ST	211	Overhead	Distribution	Luminaire	LUM HPS RWY 70W	Active	70	90435-67003	S14	CITY OF PAWTUCKET
0008	000	1	DODGE	ST	211	Overhead	Distribution	Luminaire	LUM HPS RWY 70W	Active	70	90435-67003	S14	CITY OF PAWTUCKET
0009	000	1	DODGE	ST	211	Overhead	Distribution	Luminaire	LUM HPS RWY 70W	Active	70	90435-67003	S14	CITY OF PAWTUCKET
0011	000	1	DODGE	ST	211	Overhead	Distribution	Luminaire	LUM HPS RWY 70W	Active	70	90435-67003	S14	CITY OF PAWTUCKET
0001	000	1	DON	CT	212	Overhead	Distribution	Luminaire	LUM HPS RWY 70W	Active	70	90435-67003	S14	CITY OF PAWTUCKET
0001	000	1	DORA	ST	213	Overhead	Distribution	Luminaire	LUM HPS RWY 70W	Active	70	90435-67003	S14	CITY OF PAWTUCKET
0003	000	1	DORA	ST	213	Overhead	Distribution	Luminaire	LUM HPS RWY 70W	Active	70	90435-67003	S14	CITY OF PAWTUCKET

0004	000	1	DORA	ST	213	Overhead	Distribution	Luminaire	LUM HPS RWY 70W	Active	70	90435-67003	S14	CITY OF PAWTUCKET
0006	000	1	DORA	ST	213	Overhead	Distribution	Luminaire	LUM HPS RWY 70W	Active	70	90435-67003	S14	CITY OF PAWTUCKET
0009	000	1	DORA	ST	213	Overhead	Distribution	Luminaire	LUM HPS RWY 70W	Active	70	90435-67003	S14	CITY OF PAWTUCKET
0010	000	1	DORA	ST	213	Overhead	Distribution	Luminaire	LUM HPS RWY 70W	Active	70	90435-67003	S14	CITY OF PAWTUCKET
0012	000	1	DORA	ST	213	Overhead	Distribution	Luminaire	LUM HPS RWY 70W	Active	70	90435-67003	S14	CITY OF PAWTUCKET
0014	000	1	DORA	ST	213	Overhead	Distribution	Luminaire	LUM HPS RWY 70W	Active	70	90435-67003	S14	CITY OF PAWTUCKET
0017	000	1	DORA	ST	213	Overhead	Distribution	Luminaire	LUM HPS RWY 70W	Active	70	90435-67003	S14	CITY OF PAWTUCKET
0021	000	1	DORA	ST	213	Overhead	Distribution	Luminaire	LUM HPS RWY 70W	Active	70	90435-67003	S14	CITY OF PAWTUCKET
0024	000	1	DORA	ST	213	Overhead	Distribution	Luminaire	LUM HPS RWY 70W	Active	70	90435-67003	S14	CITY OF PAWTUCKET
0025	000	1	DORA	ST	213	Overhead	Distribution	Luminaire	LUM HPS RWY 70W	Active	70	90435-67003	S14	CITY OF PAWTUCKET
0002	000	1	DORAN	DR	214	Overhead	Distribution	Luminaire	LUM HPS RWY 70W	Active	70	90435-67003	S14	CITY OF PAWTUCKET
0002	000	1	DORRANCE	ST	215	Overhead	Distribution	Luminaire	LUM HPS RWY 70W	Active	70	90435-67003	S14	CITY OF PAWTUCKET
0003	000	1	DORRANCE	ST	215	Overhead	Distribution	Luminaire	LUM HPS RWY 70W	Active	70	90435-67003	S14	CITY OF PAWTUCKET
0002	000	1	DORSET	RD	216	Overhead	Distribution	Luminaire	LUM HPS RWY 70W	Active	70	90435-67003	S14	CITY OF PAWTUCKET
0004	000	1	DORSET	RD	216	Overhead	Distribution	Luminaire	LUM HPS RWY 70W	Active	70	90435-67003	S14	CITY OF PAWTUCKET
0002	000	1	DOVER	ST	217	Overhead	Distribution	Luminaire	LUM HPS RWY 70W	Active	70	90435-67003	S14	CITY OF PAWTUCKET
0004	000	1	DOVER	ST	217	Overhead	Distribution	Luminaire	LUM HPS RWY 70W	Active	70	90435-67003	S14	CITY OF PAWTUCKET
0007	000	1	DOVER	ST	217	Overhead	Distribution	Luminaire	LUM HPS RWY 70W	Active	70	90435-67003	S14	CITY OF PAWTUCKET
0009	000	1	DOVER	ST	217	Overhead	Distribution	Luminaire	LUM HPS RWY 70W	Active	70	90435-67003	S14	CITY OF PAWTUCKET
0003	000	1	DOWNES	AVE	218	Overhead	Distribution	Luminaire	LUM HPS RWY 100W	Active	100	90435-67003	S14	CITY OF PAWTUCKET
0005	000	1	DOWNES	AVE	218	Overhead	Distribution	Luminaire	LUM HPS RWY 70W	Active	70	90435-67003	S14	CITY OF PAWTUCKET
0008	000	1	DOWNES	AVE	218	Overhead	Distribution	Luminaire	LUM HPS RWY 70W	Active	70	90435-67003	S14	CITY OF PAWTUCKET
0003	000	1	DRAPER	ST	219	Overhead	Distribution	Luminaire	LUM HPS RWY 70W	Active	70	90435-67003	S14	CITY OF PAWTUCKET
0007	000	1	DRAPER	ST	219	Overhead	Distribution	Luminaire	LUM HPS RWY 70W	Active	70	90435-67003	S14	CITY OF PAWTUCKET
0009	000	1	DRAPER	ST	219	Overhead	Distribution	Luminaire	LUM HPS RWY 70W	Active	70	90435-67003	S14	CITY OF PAWTUCKET
0002	000	1	DROLET	AVE	220	Overhead	Distribution	Luminaire	LUM HPS RWY 70W	Active	70	90435-67003	S14	CITY OF PAWTUCKET
0004	000	1	DROLET	AVE	220	Overhead	Distribution	Luminaire	LUM HPS RWY 70W	Active	70	90435-67003	S14	CITY OF PAWTUCKET
0006	000	1	DROLET	AVE	220	Overhead	Distribution	Luminaire	LUM HPS RWY 70W	Active	70	90435-67003	S14	CITY OF PAWTUCKET
0001	001	1	DRYDEN	AVE	221	Overhead	Distribution	Luminaire	LUM HPS RWY 70W	Active	70	90435-67003	S14	CITY OF PAWTUCKET
0002	000	1	DRYDEN	AVE	221	Overhead	Distribution	Luminaire	LUM HPS RWY 70W	Active	70	90435-67003	S14	CITY OF PAWTUCKET
0004	000	1	DRYDEN	AVE	221	Overhead	Distribution	Luminaire	LUM HPS RWY 70W	Active	70	90435-67003	S14	CITY OF PAWTUCKET
0006	000	1	DRYDEN	AVE	221	Overhead	Distribution	Luminaire	LUM HPS RWY 70W	Active	70	90435-67003	S14	CITY OF PAWTUCKET
0008	000	1	DRYDEN	AVE	221	Overhead	Distribution	Luminaire	LUM HPS RWY 70W	Active	70	90435-67003	S14	CITY OF PAWTUCKET
0011	000	1	DRYDEN	AVE	221	Overhead	Distribution	Luminaire	LUM HPS RWY 70W	Active	70	90435-67003	S14	CITY OF PAWTUCKET
0012	000	1	DRYDEN	AVE	221	Overhead	Distribution	Luminaire	LUM HPS RWY 70W	Active	70	90435-67003	S14	CITY OF PAWTUCKET
0013	000	1	DRYDEN	AVE	221	Overhead	Distribution	Luminaire	LUM HPS RWY 70W	Active	70	90435-67003	S14	CITY OF PAWTUCKET
0001	000	1	DUDLEY	ST	222	Overhead	Distribution	Luminaire	LUM HPS RWY 70W	Active	70	90435-67003	S14	CITY OF PAWTUCKET
0003	000	1	DUDLEY	ST	222	Overhead	Distribution	Luminaire	LUM HPS RWY 70W	Active	70	90435-67003	S14	CITY OF PAWTUCKET
0002	000	1	DUNCAN	ST	223	Overhead	Distribution	Luminaire	LUM HPS RWY 70W	Active	70	90435-67003	S14	CITY OF PAWTUCKET
0004	000	1	DUNCAN	ST	223	Overhead	Distribution	Luminaire	LUM HPS RWY 70W	Active	70	90435-67003	S14	CITY OF PAWTUCKET
0002	000	1	DUNNELL	AVE	224	Overhead	Distribution	Luminaire	LUM HPS RWY 70W	Active	70	90435-67003	S14	CITY OF PAWTUCKET
0003	000	1	DUNNELL	LN	225	Overhead	Distribution	Luminaire	LUM HPS RWY 100W	Active	100	90435-67003	S14	CITY OF PAWTUCKET
0004	000	1	DUNNELL	AVE	224	Overhead	Distribution	Luminaire	LUM HPS RWY 70W	Active	70	90435-67003	S14	CITY OF PAWTUCKET
0005	000	1	DUNNELL	LN	225	Overhead	Distribution	Luminaire	LUM HPS RWY 70W	Active	70	90435-67003	S14	CITY OF PAWTUCKET
0006	000	1	DUNNELL	AVE	224	Overhead	Distribution	Luminaire	LUM HPS RWY 70W	Active	70	90435-67003	S14	CITY OF PAWTUCKET
0010	000	1	DUNNELL	AVE	224	Overhead	Distribution	Luminaire	LUM HPS RWY 70W	Active	70	90435-67003	S14	CITY OF PAWTUCKET
0011	000	1	DUNNELL	AVE	224	Overhead	Distribution	Luminaire	LUM HPS RWY 100W	Active	100	90435-67003	S14	CITY OF PAWTUCKET
0012	000	1	DUNNELL	AVE	224	Overhead	Distribution	Luminaire	LUM HPS RWY 70W	Active	70	90435-67003	S14	CITY OF PAWTUCKET
0013	000	1	DUNNELL	AVE	224	Overhead	Distribution	Luminaire	LUM HPS RWY 100W	Active	100	90435-67003	S14	CITY OF PAWTUCKET
0015	000	1	DUNNELL	AVE	224	Overhead	Distribution	Luminaire	LUM HPS RWY 100W	Active	100	90435-67003	S14	CITY OF PAWTUCKET
0016	000	1	DUNNELL	AVE	224	Overhead	Distribution	Luminaire	LUM HPS RWY 70W	Active	70	90435-67003	S14	CITY OF PAWTUCKET
0017	000	1	DUNNELL	AVE	224	Overhead	Distribution	Luminaire	LUM HPS RWY 100W	Active	100	90435-67003	S14	CITY OF PAWTUCKET
0002	000	0	EAST	AVE	227	Underground	Streetlighting	Pole	POLE METAL =>25FT	Active	0	90435-67003	S14	CITY OF PAWTUCKET
0002	000	1	EAST	AVE	227	Underground	Streetlighting	Luminaire	LUM HPS RWY 250W	Active	250	90435-67003	S14	CITY OF PAWTUCKET
0002	000	1	EAST	ST	228	Overhead	Distribution	Luminaire	LUM HPS RWY 70W	Active	70	90435-67003	S14	CITY OF PAWTUCKET
0002	001	0	EAST	AVE	227	Underground	Streetlighting	Pole	POLE METAL =>25FT	Active	0	90435-67003	S14	CITY OF PAWTUCKET
0002	001	1	EAST	AVE	227	Underground	Streetlighting	Luminaire	LUM HPS RWY 250W	Active	250	90435-67003	S14	CITY OF PAWTUCKET
0003	000	0	EAST	AVE	227	Underground	Streetlighting	Pole	POLE METAL =>25FT	Active	0	90435-67003	S14	CITY OF PAWTUCKET
0003	000	1	EAST	AVE	227	Underground	Streetlighting	Luminaire	LUM HPS RWY 250W	Active	250	90435-67003	S14	CITY OF PAWTUCKET
0003	000	1	EAST	ST	228	Overhead	Distribution	Luminaire	LUM HPS RWY 70W	Active	70	90435-67003	S14	CITY OF PAWTUCKET
0003	001	0	EAST	AVE	227	Underground	Streetlighting	Pole	POLE METAL =>25FT	Active	0	90435-67003	S14	CITY OF PAWTUCKET
0003	001	1	EAST	AVE	227	Underground	Streetlighting	Luminaire	LUM HPS RWY 250W	Active	250	90435-67003	S14	CITY OF PAWTUCKET
0004	000	0	EAST	AVE	227	Underground	Streetlighting	Pole	POLE METAL =>25FT	Active	0	90435-67003	S14	CITY OF PAWTUCKET

0004	000	1	EAST	AVE	227	Underground	Streetlighting	Luminaire	LUM HPS RWY 250W	Active	250	90435-67003	S14	CITY OF PAWTUCKET
0004	001	0	EAST	AVE	227	Underground	Streetlighting	Pole	POLE METAL =>25FT	Active	0	90435-67003	S14	CITY OF PAWTUCKET
0004	001	1	EAST	AVE	227	Underground	Streetlighting	Luminaire	LUM HPS FLD 400W	Active	400	90435-67003	S14	CITY OF PAWTUCKET
0005	000	0	EAST	AVE	227	Underground	Streetlighting	Pole	POLE METAL =>25FT	Active	0	90435-67003	S14	CITY OF PAWTUCKET
0005	000	1	EAST	AVE	227	Underground	Streetlighting	Luminaire	LUM HPS RWY 250W	Active	250	90435-67003	S14	CITY OF PAWTUCKET
0005	000	1	EAST	ST	228	Overhead	Distribution	Luminaire	LUM HPS RWY 100W	Active	100	90435-67003	S14	CITY OF PAWTUCKET
0006	001	0	EAST	AVE	227	Underground	Streetlighting	Pole	POLE METAL =>25FT	Active	0	90435-67003	S14	CITY OF PAWTUCKET
0006	001	1	EAST	AVE	227	Underground	Streetlighting	Luminaire	LUM HPS RWY 250W	Active	250	90435-67003	S14	CITY OF PAWTUCKET
0007	000	0	EAST	AVE	227	Underground	Streetlighting	Pole	POLE METAL =>25FT	Active	0	90435-67003	S14	CITY OF PAWTUCKET
0007	000	1	EAST	AVE	227	Underground	Streetlighting	Luminaire	LUM HPS RWY 250W	Active	250	90435-67003	S14	CITY OF PAWTUCKET
0007	000	1	EAST	ST	228	Overhead	Distribution	Luminaire	LUM HPS RWY 100W	Active	100	90435-67003	S14	CITY OF PAWTUCKET
0008	000	0	EAST	AVE	227	Underground	Streetlighting	Pole	POLE METAL =>25FT	Active	0	90435-67003	S14	CITY OF PAWTUCKET
0008	000	1	EAST	AVE	227	Underground	Streetlighting	Luminaire	LUM HPS RWY 250W	Active	250	90435-67003	S14	CITY OF PAWTUCKET
0009	000	0	EAST	AVE	227	Underground	Streetlighting	Pole	POLE METAL =>25FT	Active	0	90435-67003	S14	CITY OF PAWTUCKET
0009	000	1	EAST	AVE	227	Underground	Streetlighting	Luminaire	LUM HPS RWY 250W	Active	250	90435-67003	S14	CITY OF PAWTUCKET
0009	001	0	EAST	AVE	227	Underground	Streetlighting	Pole	POLE METAL =>25FT	Active	0	90435-67003	S14	CITY OF PAWTUCKET
0009	001	1	EAST	AVE	227	Underground	Streetlighting	Luminaire	LUM HPS RWY 250W	Active	250	90435-67003	S14	CITY OF PAWTUCKET
0010	000	0	EAST	AVE	227	Underground	Streetlighting	Pole	POLE METAL =>25FT	Active	0	90435-67003	S14	CITY OF PAWTUCKET
0010	000	1	EAST	AVE	227	Underground	Streetlighting	Luminaire	LUM HPS RWY 250W	Active	250	90435-67003	S14	CITY OF PAWTUCKET
0010	001	0	EAST	AVE	227	Underground	Streetlighting	Pole	POLE METAL =>25FT	Active	0	90435-67003	S14	CITY OF PAWTUCKET
0010	001	1	EAST	AVE	227	Underground	Streetlighting	Luminaire	LUM HPS RWY 250W	Active	250	90435-67003	S14	CITY OF PAWTUCKET
0010	002	0	EAST	AVE	227	Underground	Streetlighting	Pole	POLE METAL =>25FT	Active	0	90435-67003	S14	CITY OF PAWTUCKET
0010	002	1	EAST	AVE	227	Underground	Streetlighting	Luminaire	LUM HPS RWY 250W-TW	Active	250	90435-67003	S14	CITY OF PAWTUCKET
0010	002	2	EAST	AVE	227	Underground	Streetlighting	Luminaire	LUM HPS RWY 250W	Active	250	90435-67003	S14	CITY OF PAWTUCKET
0011	000	0	EAST	AVE	227	Underground	Streetlighting	Pole	POLE METAL =>25FT	Active	0	90435-67003	S14	CITY OF PAWTUCKET
0011	000	1	EAST	AVE	227	Underground	Streetlighting	Luminaire	LUM HPS RWY 250W	Active	250	90435-67003	S14	CITY OF PAWTUCKET
0013	000	1	EAST	ST	228	Overhead	Distribution	Luminaire	LUM HPS RWY 100W	Active	100	90435-67003	S14	CITY OF PAWTUCKET
0014	000	1	EAST	ST	228	Overhead	Distribution	Luminaire	LUM HPS RWY 100W	Active	100	90435-67003	S14	CITY OF PAWTUCKET
0016	000	0	EAST	AVE	227	Underground	Streetlighting	Pole	POLE METAL =>25FT	Active	0	90435-67003	S14	CITY OF PAWTUCKET
0016	000	1	EAST	AVE	227	Underground	Streetlighting	Luminaire	LUM HPS RWY 250W	Active	250	90435-67003	S14	CITY OF PAWTUCKET
0016	000	1	EAST	ST	228	Overhead	Distribution	Luminaire	LUM HPS RWY 100W	Active	100	90435-67003	S14	CITY OF PAWTUCKET
0017	000	0	EAST	AVE	227	Underground	Streetlighting	Pole	POLE METAL =>25FT	Active	0	90435-67003	S14	CITY OF PAWTUCKET
0017	000	1	EAST	AVE	227	Underground	Streetlighting	Luminaire	LUM HPS RWY 250W	Active	250	90435-67003	S14	CITY OF PAWTUCKET
0018	000	0	EAST	AVE	227	Underground	Streetlighting	Pole	POLE METAL =>25FT	Active	0	90435-67003	S14	CITY OF PAWTUCKET
0018	000	1	EAST	AVE	227	Underground	Streetlighting	Luminaire	LUM HPS RWY 250W	Active	250	90435-67003	S14	CITY OF PAWTUCKET
0018	000	1	EAST	ST	228	Overhead	Distribution	Luminaire	LUM HPS RWY 250W	Active	250	90435-67003	S14	CITY OF PAWTUCKET
0019	000	0	EAST	AVE	227	Underground	Streetlighting	Pole	POLE METAL =>25FT	Active	0	90435-67003	S14	CITY OF PAWTUCKET
0019	000	1	EAST	AVE	227	Underground	Streetlighting	Luminaire	LUM HPS RWY 250W	Active	250	90435-67003	S14	CITY OF PAWTUCKET
0019	000	1	EAST	ST	228	Overhead	Distribution	Luminaire	LUM HPS RWY 100W	Active	100	90435-67003	S14	CITY OF PAWTUCKET
0020	000	0	EAST	AVE	227	Underground	Streetlighting	Pole	POLE METAL =>25FT	Active	0	90435-67003	S14	CITY OF PAWTUCKET
0020	000	1	EAST	AVE	227	Underground	Streetlighting	Luminaire	LUM HPS RWY 250W	Active	250	90435-67003	S14	CITY OF PAWTUCKET
0021	000	1	EAST	ST	228	Overhead	Distribution	Luminaire	LUM HPS RWY 100W	Active	100	90435-67003	S14	CITY OF PAWTUCKET
0023	000	1	EAST	ST	228	Overhead	Distribution	Luminaire	LUM HPS RWY 100W	Active	100	90435-67003	S14	CITY OF PAWTUCKET
0024	000	1	EAST	ST	228	Overhead	Distribution	Luminaire	LUM HPS RWY 100W	Active	100	90435-67003	S14	CITY OF PAWTUCKET
0026	000	1	EAST	ST	228	Overhead	Distribution	Luminaire	LUM HPS RWY 100W	Active	100	90435-67003	S14	CITY OF PAWTUCKET
0027	000	1	EAST	ST	228	Overhead	Distribution	Luminaire	LUM HPS RWY 100W	Active	100	90435-67003	S14	CITY OF PAWTUCKET
0028	000	1	EAST	AVE	227	Overhead	Distribution	Luminaire	LUM HPS RWY 250W	Active	250	90435-67003	S14	CITY OF PAWTUCKET
0028	000	1	EAST	ST	228	Overhead	Distribution	Luminaire	LUM HPS RWY 100W	Active	100	90435-67003	S14	CITY OF PAWTUCKET
0029	000	1	EAST	AVE	227	Overhead	Distribution	Luminaire	LUM HPS RWY 250W	Active	250	90435-67003	S14	CITY OF PAWTUCKET
0029	000	1	EAST	ST	228	Overhead	Distribution	Luminaire	LUM HPS RWY 250W	Active	250	90435-67003	S14	CITY OF PAWTUCKET
0030	000	1	EAST	AVE	227	Overhead	Distribution	Luminaire	LUM HPS RWY 250W	Active	250	90435-67003	S14	CITY OF PAWTUCKET
0031	000	1	EAST	AVE	227	Overhead	Distribution	Luminaire	LUM HPS RWY 250W	Active	250	90435-67003	S14	CITY OF PAWTUCKET
0037	000	1	EAST	AVE	227	Overhead	Distribution	Luminaire	LUM HPS RWY 250W	Active	250	90435-67003	S14	CITY OF PAWTUCKET
0039	000	1	EAST	AVE	227	Overhead	Distribution	Luminaire	LUM HPS RWY 250W	Active	250	90435-67003	S14	CITY OF PAWTUCKET
0041	000	1	EAST	AVE	227	Overhead	Distribution	Luminaire	LUM HPS RWY 250W	Active	250	90435-67003	S14	CITY OF PAWTUCKET
0043	000	1	EAST	AVE	227	Overhead	Distribution	Luminaire	LUM HPS RWY 250W	Active	250	90435-67003	S14	CITY OF PAWTUCKET
0045	000	1	EAST	AVE	227	Overhead	Distribution	Luminaire	LUM HPS RWY 250W	Active	250	90435-67003	S14	CITY OF PAWTUCKET
0046	000	1	EAST	AVE	227	Overhead	Distribution	Luminaire	LUM HPS RWY 250W	Active	250	90435-67003	S14	CITY OF PAWTUCKET
0047	000	1	EAST	AVE	227	Overhead	Distribution	Luminaire	LUM HPS RWY 250W	Active	250	90435-67003	S14	CITY OF PAWTUCKET
0051	000	1	EAST	AVE	227	Overhead	Distribution	Luminaire	LUM HPS RWY 250W	Active	250	90435-67003	S14	CITY OF PAWTUCKET
0053	000	1	EAST	AVE	227	Overhead	Distribution	Luminaire	LUM HPS RWY 250W	Active	250	90435-67003	S14	CITY OF PAWTUCKET
0057	000	1	EAST	AVE	227	Overhead	Distribution	Luminaire	LUM HPS RWY 250W	Active	250	90435-67003	S14	CITY OF PAWTUCKET
0059	000	1	EAST	AVE	227	Overhead	Distribution	Luminaire	LUM HPS RWY 250W	Active	250	90435-67003	S14	CITY OF PAWTUCKET

0063	000	1	EAST	AVE	227	Overhead	Distribution	Luminaire	LUM HPS RWY 250W	Active	250	90435-67003	S14	CITY OF PAWTUCKET
0067	000	1	EAST	AVE	227	Overhead	Distribution	Luminaire	LUM HPS RWY 250W	Active	250	90435-67003	S14	CITY OF PAWTUCKET
0069	000	1	EAST	AVE	227	Overhead	Distribution	Luminaire	LUM HPS RWY 250W	Active	250	90435-67003	S14	CITY OF PAWTUCKET
0071	000	1	EAST	AVE	227	Overhead	Distribution	Luminaire	LUM HPS RWY 250W	Active	250	90435-67003	S14	CITY OF PAWTUCKET
0073	000	1	EAST	AVE	227	Overhead	Distribution	Luminaire	LUM HPS RWY 250W	Active	250	90435-67003	S14	CITY OF PAWTUCKET
0075	000	1	EAST	AVE	227	Overhead	Distribution	Luminaire	LUM HPS RWY 250W	Active	250	90435-67003	S14	CITY OF PAWTUCKET
0076	000	1	EAST	AVE	227	Overhead	Distribution	Luminaire	LUM HPS RWY 250W	Active	250	90435-67003	S14	CITY OF PAWTUCKET
0078	000	1	EAST	AVE	227	Overhead	Distribution	Luminaire	LUM HPS RWY 250W	Active	250	90435-67003	S14	CITY OF PAWTUCKET
0080	000	1	EAST	AVE	227	Overhead	Distribution	Luminaire	LUM HPS RWY 70W	Active	70	90435-67003	S14	CITY OF PAWTUCKET
0082	000	1	EAST	AVE	227	Overhead	Distribution	Luminaire	LUM HPS RWY 250W	Active	250	90435-67003	S14	CITY OF PAWTUCKET
0085	001	1	EAST	AVE	227	Overhead	Distribution	Luminaire	LUM HPS RWY 250W	Active	250	90435-67003	S14	CITY OF PAWTUCKET
0087	000	1	EAST	AVE	227	Overhead	Distribution	Luminaire	LUM HPS RWY 250W	Active	250	90435-67003	S14	CITY OF PAWTUCKET
0092	000	1	EAST	AVE	227	Overhead	Distribution	Luminaire	LUM HPS RWY 250W	Active	250	90435-67003	S14	CITY OF PAWTUCKET
0093	000	1	EAST	AVE	227	Overhead	Distribution	Luminaire	LUM HPS RWY 250W	Active	250	90435-67003	S14	CITY OF PAWTUCKET
0095	000	1	EAST	AVE	227	Overhead	Distribution	Luminaire	LUM HPS RWY 250W	Active	250	90435-67003	S14	CITY OF PAWTUCKET
0096	000	1	EAST	AVE	227	Overhead	Distribution	Luminaire	LUM HPS RWY 250W	Active	250	90435-67003	S14	CITY OF PAWTUCKET
0099	000	1	EAST	AVE	227	Overhead	Distribution	Luminaire	LUM HPS RWY 250W	Active	250	90435-67003	S14	CITY OF PAWTUCKET
0101	000	1	EAST	AVE	227	Overhead	Distribution	Luminaire	LUM HPS RWY 250W	Active	250	90435-67003	S14	CITY OF PAWTUCKET
0104	000	1	EAST	AVE	227	Overhead	Distribution	Luminaire	LUM HPS RWY 250W	Active	250	90435-67003	S14	CITY OF PAWTUCKET
0105	000	1	EAST	AVE	227	Overhead	Distribution	Luminaire	LUM HPS RWY 250W	Active	250	90435-67003	S14	CITY OF PAWTUCKET
0107	000	1	EAST	AVE	227	Overhead	Distribution	Luminaire	LUM HPS RWY 250W	Active	250	90435-67003	S14	CITY OF PAWTUCKET
0110	000	1	EAST	AVE	227	Overhead	Distribution	Luminaire	LUM HPS RWY 250W	Active	250	90435-67003	S14	CITY OF PAWTUCKET
0112	000	1	EAST	AVE	227	Overhead	Distribution	Luminaire	LUM HPS RWY 250W	Active	250	90435-67003	S14	CITY OF PAWTUCKET
0113	000	1	EAST	AVE	227	Overhead	Distribution	Luminaire	LUM HPS RWY 250W	Active	250	90435-67003	S14	CITY OF PAWTUCKET
0116	000	1	EAST	AVE	227	Overhead	Distribution	Luminaire	LUM HPS RWY 250W	Active	250	90435-67003	S14	CITY OF PAWTUCKET
0117	000	1	EAST	AVE	227	Overhead	Distribution	Luminaire	LUM HPS RWY 250W	Active	250	90435-67003	S14	CITY OF PAWTUCKET
0120	000	1	EAST	AVE	227	Overhead	Distribution	Luminaire	LUM HPS RWY 250W	Active	250	90435-67003	S14	CITY OF PAWTUCKET
0121	000	1	EAST	AVE	227	Overhead	Distribution	Luminaire	LUM HPS RWY 250W	Active	250	90435-67003	S14	CITY OF PAWTUCKET
0124	000	1	EAST	AVE	227	Overhead	Distribution	Luminaire	LUM HPS RWY 250W	Active	250	90435-67003	S14	CITY OF PAWTUCKET
0125	000	1	EAST	AVE	227	Overhead	Distribution	Luminaire	LUM HPS RWY 250W	Active	250	90435-67003	S14	CITY OF PAWTUCKET
0128	000	1	EAST	AVE	227	Overhead	Distribution	Luminaire	LUM HPS RWY 250W	Active	250	90435-67003	S14	CITY OF PAWTUCKET
0129	000	1	EAST	AVE	227	Overhead	Distribution	Luminaire	LUM HPS RWY 250W	Active	250	90435-67003	S14	CITY OF PAWTUCKET
0133	000	1	EAST	AVE	227	Overhead	Distribution	Luminaire	LUM HPS RWY 250W	Active	250	90435-67003	S14	CITY OF PAWTUCKET
0135	001	1	EAST	AVE	227	Overhead	Distribution	Luminaire	LUM HPS RWY 250W	Active	250	90435-67003	S14	CITY OF PAWTUCKET
0137	000	1	EAST	AVE	227	Overhead	Distribution	Luminaire	LUM HPS RWY 250W	Active	250	90435-67003	S14	CITY OF PAWTUCKET
0139	001	1	EAST	AVE	227	Overhead	Distribution	Luminaire	LUM HPS RWY 250W	Active	250	90435-67003	S14	CITY OF PAWTUCKET
0141	000	1	EAST	AVE	227	Overhead	Distribution	Luminaire	LUM HPS RWY 250W	Active	250	90435-67003	S14	CITY OF PAWTUCKET
0143	000	1	EAST	AVE	227	Overhead	Distribution	Luminaire	LUM HPS RWY 250W	Active	250	90435-67003	S14	CITY OF PAWTUCKET
0001	000	1	EATON	ST	229	Overhead	Distribution	Luminaire	LUM HPS RWY 250W	Active	250	90435-67003	S14	CITY OF PAWTUCKET
0002	000	1	EATON	ST	229	Overhead	Distribution	Luminaire	LUM HPS RWY 70W	Active	70	90435-67003	S14	CITY OF PAWTUCKET
0005	000	1	EATON	ST	229	Overhead	Distribution	Luminaire	LUM HPS RWY 70W	Active	70	90435-67003	S14	CITY OF PAWTUCKET
0007	000	1	EATON	ST	229	Overhead	Distribution	Luminaire	LUM HPS RWY 70W	Active	70	90435-67003	S14	CITY OF PAWTUCKET
0010	000	1	EATON	ST	229	Overhead	Distribution	Luminaire	LUM HPS RWY 70W	Active	70	90435-67003	S14	CITY OF PAWTUCKET
0012	000	1	EATON	ST	229	Overhead	Distribution	Luminaire	LUM HPS RWY 70W	Active	70	90435-67003	S14	CITY OF PAWTUCKET
0013	000	1	EATON	ST	229	Overhead	Distribution	Luminaire	LUM HPS RWY 70W	Active	70	90435-67003	S14	CITY OF PAWTUCKET
0003	000	1	EDDINGTON	ST	230	Overhead	Distribution	Luminaire	LUM HPS RWY 70W	Active	70	90435-67003	S14	CITY OF PAWTUCKET
0005	000	1	EDDINGTON	ST	230	Overhead	Distribution	Luminaire	LUM HPS RWY 70W	Active	70	90435-67003	S14	CITY OF PAWTUCKET
0007	000	1	EDDINGTON	ST	230	Overhead	Distribution	Luminaire	LUM HPS RWY 70W	Active	70	90435-67003	S14	CITY OF PAWTUCKET
0001	000	1	EDENDALE	AVE	231	Overhead	Distribution	Luminaire	LUM HPS RWY 70W	Active	70	90435-67003	S14	CITY OF PAWTUCKET
0003	000	1	EDENDALE	AVE	231	Overhead	Distribution	Luminaire	LUM HPS RWY 70W	Active	70	90435-67003	S14	CITY OF PAWTUCKET
0005	000	1	EDENDALE	AVE	231	Overhead	Distribution	Luminaire	LUM HPS RWY 70W	Active	70	90435-67003	S14	CITY OF PAWTUCKET
0001	000	1	EDGEMERE	RD	232	Overhead	Distribution	Luminaire	LUM HPS RWY 70W	Active	70	90435-67003	S14	CITY OF PAWTUCKET
0003	000	1	EDGEMERE	RD	232	Overhead	Distribution	Luminaire	LUM HPS RWY 70W	Active	70	90435-67003	S14	CITY OF PAWTUCKET
0005	000	1	EDGEMERE	RD	232	Overhead	Distribution	Luminaire	LUM HPS RWY 70W	Active	70	90435-67003	S14	CITY OF PAWTUCKET
0007	000	1	EDGEMERE	RD	232	Overhead	Distribution	Luminaire	LUM HPS RWY 70W	Active	70	90435-67003	S14	CITY OF PAWTUCKET
0009	000	1	EDGEMERE	RD	232	Overhead	Distribution	Luminaire	LUM HPS RWY 70W	Active	70	90435-67003	S14	CITY OF PAWTUCKET
0011	000	1	EDGEMERE	RD	232	Overhead	Distribution	Luminaire	LUM HPS RWY 70W	Active	70	90435-67003	S14	CITY OF PAWTUCKET
0013	000	1	EDGEMERE	RD	232	Overhead	Distribution	Luminaire	LUM HPS RWY 70W	Active	70	90435-67003	S14	CITY OF PAWTUCKET
0016	000	1	EDGEMERE	RD	232	Overhead	Distribution	Luminaire	LUM HPS RWY 70W	Active	70	90435-67003	S14	CITY OF PAWTUCKET
0001	000	1	ELDER	ST	233	Overhead	Distribution	Luminaire	LUM HPS RWY 70W	Active	70	90435-67003	S14	CITY OF PAWTUCKET
0002	000	1	ELDER	ST	233	Overhead	Distribution	Luminaire	LUM HPS RWY 70W	Active	70	90435-67003	S14	CITY OF PAWTUCKET
0004	000	1	ELDER	ST	233	Overhead	Distribution	Luminaire	LUM HPS RWY 70W	Active	70	90435-67003	S14	CITY OF PAWTUCKET
0006	000	1	ELDER	ST	233	Overhead	Distribution	Luminaire	LUM HPS RWY 70W	Active	70	90435-67003	S14	CITY OF PAWTUCKET

0008	000	1	ELDER	ST	233	Overhead	Distribution	Luminaire	LUM HPS RWY 70W	Active	70	90435-67003	S14	CITY OF PAWTUCKET
0002	000	1	ELDRIDGE	ST	234	Overhead	Distribution	Luminaire	LUM HPS RWY 70W	Active	70	90435-67003	S14	CITY OF PAWTUCKET
0001	000	1	ELIZABETH	ST	235	Overhead	Distribution	Luminaire	LUM HPS RWY 70W	Active	70	90435-67003	S14	CITY OF PAWTUCKET
0003	000	1	ELIZABETH	ST	235	Overhead	Distribution	Luminaire	LUM HPS RWY 70W	Active	70	90435-67003	S14	CITY OF PAWTUCKET
0002	000	1	ELMCREST	DR	236	Overhead	Distribution	Luminaire	LUM HPS RWY 70W	Active	70	90435-67003	S14	CITY OF PAWTUCKET
0004	000	1	ELMCREST	DR	236	Overhead	Distribution	Luminaire	LUM HPS RWY 70W	Active	70	90435-67003	S14	CITY OF PAWTUCKET
0005	000	1	ELMCREST	DR	236	Overhead	Distribution	Luminaire	LUM HPS RWY 70W	Active	70	90435-67003	S14	CITY OF PAWTUCKET
0002	000	1	EMORY	ST	237	Overhead	Distribution	Luminaire	LUM HPS RWY 70W	Active	70	90435-67003	S14	CITY OF PAWTUCKET
0001	000	1	EMPIRE	ST	238	Overhead	Distribution	Luminaire	LUM HPS RWY 70W	Active	70	90435-67003	S14	CITY OF PAWTUCKET
0005	000	1	EMPIRE	ST	238	Overhead	Distribution	Luminaire	LUM HPS RWY 70W	Active	70	90435-67003	S14	CITY OF PAWTUCKET
0006	000	1	EMPIRE	ST	238	Overhead	Distribution	Luminaire	LUM HPS RWY 70W	Active	70	90435-67003	S14	CITY OF PAWTUCKET
0007	000	1	EMPIRE	ST	238	Overhead	Distribution	Luminaire	LUM HPS RWY 70W	Active	70	90435-67003	S14	CITY OF PAWTUCKET
0008	000	1	EMPIRE	ST	238	Overhead	Distribution	Luminaire	LUM HPS RWY 70W	Active	70	90435-67003	S14	CITY OF PAWTUCKET
0001	000	1	ENFIELD	ST	239	Overhead	Distribution	Luminaire	LUM HPS RWY 70W	Active	70	90435-67003	S14	CITY OF PAWTUCKET
0002	000	1	ENFIELD	ST	239	Overhead	Distribution	Luminaire	LUM HPS RWY 70W	Active	70	90435-67003	S14	CITY OF PAWTUCKET
0004	000	1	ENFIELD	ST	239	Overhead	Distribution	Luminaire	LUM HPS RWY 70W	Active	70	90435-67003	S14	CITY OF PAWTUCKET
0007	000	1	ENFIELD	ST	239	Overhead	Distribution	Luminaire	LUM HPS RWY 70W	Active	70	90435-67003	S14	CITY OF PAWTUCKET
0009	000	1	ENFIELD	ST	239	Overhead	Distribution	Luminaire	LUM HPS RWY 70W	Active	70	90435-67003	S14	CITY OF PAWTUCKET
0004	000	1	ENGLEWOOD	AVE	240	Overhead	Distribution	Luminaire	LUM HPS RWY 70W	Active	70	90435-67003	S14	CITY OF PAWTUCKET
0006	000	1	ENGLEWOOD	AVE	240	Overhead	Distribution	Luminaire	LUM HPS RWY 70W	Active	70	90435-67003	S14	CITY OF PAWTUCKET
0010	000	1	ENGLEWOOD	AVE	240	Overhead	Distribution	Luminaire	LUM HPS RWY 70W	Active	70	90435-67003	S14	CITY OF PAWTUCKET
0012	000	1	ENGLEWOOD	AVE	240	Overhead	Distribution	Luminaire	LUM HPS RWY 70W	Active	70	90435-67003	S14	CITY OF PAWTUCKET
0013	000	1	ENGLEWOOD	AVE	240	Overhead	Distribution	Luminaire	LUM HPS RWY 70W	Active	70	90435-67003	S14	CITY OF PAWTUCKET
0014	000	1	ENGLEWOOD	AVE	240	Overhead	Distribution	Luminaire	LUM HPS RWY 70W	Active	70	90435-67003	S14	CITY OF PAWTUCKET
0018	000	1	ENGLEWOOD	AVE	240	Overhead	Distribution	Luminaire	LUM HPS RWY 70W	Active	70	90435-67003	S14	CITY OF PAWTUCKET
0004	000	1	ESTEN	AVE	241	Overhead	Distribution	Luminaire	LUM HPS RWY 70W	Active	70	90435-67003	S14	CITY OF PAWTUCKET
0005	000	1	ESTEN	AVE	241	Overhead	Distribution	Luminaire	LUM HPS RWY 70W	Active	70	90435-67003	S14	CITY OF PAWTUCKET
0007	000	1	ESTEN	AVE	241	Overhead	Distribution	Luminaire	LUM HPS RWY 100W	Active	100	90435-67003	S14	CITY OF PAWTUCKET
0009	000	1	ESTEN	AVE	241	Overhead	Distribution	Luminaire	LUM HPS RWY 100W	Active	100	90435-67003	S14	CITY OF PAWTUCKET
0011	000	1	ESTEN	AVE	241	Overhead	Distribution	Luminaire	LUM HPS RWY 100W	Active	100	90435-67003	S14	CITY OF PAWTUCKET
0013	000	1	ESTEN	AVE	241	Overhead	Distribution	Luminaire	LUM HPS RWY 100W	Active	100	90435-67003	S14	CITY OF PAWTUCKET
0015	000	1	ESTEN	AVE	241	Overhead	Distribution	Luminaire	LUM HPS RWY 70W	Active	70	90435-67003	S14	CITY OF PAWTUCKET
0017	000	1	ESTEN	AVE	241	Overhead	Distribution	Luminaire	LUM HPS RWY 70W	Active	70	90435-67003	S14	CITY OF PAWTUCKET
0018	000	1	ESTEN	AVE	241	Overhead	Distribution	Luminaire	LUM HPS RWY 70W	Active	70	90435-67003	S14	CITY OF PAWTUCKET
0021	000	1	ESTEN	AVE	241	Overhead	Distribution	Luminaire	LUM HPS RWY 70W	Active	70	90435-67003	S14	CITY OF PAWTUCKET
0023	000	1	ESTEN	AVE	241	Overhead	Distribution	Luminaire	LUM HPS RWY 70W	Active	70	90435-67003	S14	CITY OF PAWTUCKET
0025	000	1	ESTEN	AVE	241	Overhead	Distribution	Luminaire	LUM HPS RWY 70W	Active	70	90435-67003	S14	CITY OF PAWTUCKET
0028	000	1	ESTEN	AVE	241	Overhead	Distribution	Luminaire	LUM HPS RWY 70W	Active	70	90435-67003	S14	CITY OF PAWTUCKET
0002	000	1	EVERETT	ST	242	Overhead	Distribution	Luminaire	LUM HPS RWY 70W	Active	70	90435-67003	S14	CITY OF PAWTUCKET
0003	000	1	EVERETT	ST	242	Overhead	Distribution	Luminaire	LUM HPS RWY 70W	Active	70	90435-67003	S14	CITY OF PAWTUCKET
0006	000	1	EVERETT	ST	242	Overhead	Distribution	Luminaire	LUM HPS RWY 70W	Active	70	90435-67003	S14	CITY OF PAWTUCKET
0008	000	1	EVERETT	ST	242	Overhead	Distribution	Luminaire	LUM HPS RWY 70W	Active	70	90435-67003	S14	CITY OF PAWTUCKET
0019	000	1	EVERGREEN	ST	243	Overhead	Distribution	Luminaire	LUM HPS RWY 70W	Active	70	90435-67003	S14	CITY OF PAWTUCKET
0020	000	1	EVERGREEN	ST	243	Overhead	Distribution	Luminaire	LUM HPS RWY 70W	Active	70	90435-67003	S14	CITY OF PAWTUCKET
0022	000	1	EVERGREEN	ST	243	Overhead	Distribution	Luminaire	LUM HPS RWY 70W	Active	70	90435-67003	S14	CITY OF PAWTUCKET
0024	000	1	EVERGREEN	ST	243	Overhead	Distribution	Luminaire	LUM HPS RWY 70W	Active	70	90435-67003	S14	CITY OF PAWTUCKET
0026	000	1	EVERGREEN	ST	243	Overhead	Distribution	Luminaire	LUM HPS RWY 70W	Active	70	90435-67003	S14	CITY OF PAWTUCKET
0027	000	1	EVERGREEN	ST	243	Overhead	Distribution	Luminaire	LUM HPS RWY 70W	Active	70	90435-67003	S14	CITY OF PAWTUCKET
0028	000	1	EVERGREEN	ST	243	Overhead	Distribution	Luminaire	LUM HPS RWY 70W	Active	70	90435-67003	S14	CITY OF PAWTUCKET
0029	000	1	EVERGREEN	ST	243	Overhead	Distribution	Luminaire	LUM HPS RWY 70W	Active	70	90435-67003	S14	CITY OF PAWTUCKET
0031	000	1	EVERGREEN	ST	243	Overhead	Distribution	Luminaire	LUM HPS RWY 70W	Active	70	90435-67003	S14	CITY OF PAWTUCKET
0032	000	1	EVERGREEN	ST	243	Overhead	Distribution	Luminaire	LUM HPS RWY 70W	Active	70	90435-67003	S14	CITY OF PAWTUCKET
0033	000	1	EVERGREEN	ST	243	Overhead	Distribution	Luminaire	LUM HPS RWY 70W	Active	70	90435-67003	S14	CITY OF PAWTUCKET
0034	000	1	EVERGREEN	ST	243	Overhead	Distribution	Luminaire	LUM HPS RWY 70W	Active	70	90435-67003	S14	CITY OF PAWTUCKET
0035	000	1	EVERGREEN	ST	243	Overhead	Distribution	Luminaire	LUM HPS RWY 100W	Active	100	90435-67003	S14	CITY OF PAWTUCKET
0037	000	1	EVERGREEN	ST	243	Overhead	Distribution	Luminaire	LUM HPS RWY 70W	Active	70	90435-67003	S14	CITY OF PAWTUCKET
0039	000	1	EVERGREEN	ST	243	Overhead	Distribution	Luminaire	LUM HPS RWY 70W	Active	70	90435-67003	S14	CITY OF PAWTUCKET
0041	000	1	EVERGREEN	ST	243	Overhead	Distribution	Luminaire	LUM HPS RWY 70W	Active	70	90435-67003	S14	CITY OF PAWTUCKET
0001	000	0	EXCHANGE	ST	244	Underground	Streetlighting	Pole	POLE METAL =>25FT	Active	0	90435-67003	S14	CITY OF PAWTUCKET
0001	000	1	EXCHANGE	ST	244	Underground	Streetlighting	Luminaire	LUM HPS RWY 250W	Active	250	90435-67003	S14	CITY OF PAWTUCKET
0001	001	0	EXCHANGE	ST	244	Underground	Streetlighting	Pole	POLE METAL =>25FT	Active	0	90435-67003	S14	CITY OF PAWTUCKET
0001	001	1	EXCHANGE	ST	244	Underground	Streetlighting	Luminaire	LUM HPS RWY 250W	Active	250	90435-67003	S14	CITY OF PAWTUCKET
0002	002	0	EXCHANGE	ST	244	Underground	Streetlighting	Pole	POLE METAL =>25FT	Active	0	90435-67003	S14	CITY OF PAWTUCKET

0002	002	1	EXCHANGE	ST	244	Underground	Streetlighting	Luminaire	LUM HPS RWY 250W-TW	Active	250	90435-67003	S14	CITY OF PAWTUCKET
0003	000	0	EXCHANGE	ST	244	Underground	Streetlighting	Pole	POLE METAL =>25FT	Active	0	90435-67003	S14	CITY OF PAWTUCKET
0003	000	1	EXCHANGE	ST	244	Underground	Streetlighting	Luminaire	LUM HPS RWY 250W-TW	Active	250	90435-67003	S14	CITY OF PAWTUCKET
0003	000	2	EXCHANGE	ST	244	Underground	Streetlighting	Luminaire	LUM HPS RWY 250W	Active	250	90435-67003	S14	CITY OF PAWTUCKET
0003	001	0	EXCHANGE	ST	244	Underground	Streetlighting	Pole	POLE METAL =>25FT	Active	0	90435-67003	S14	CITY OF PAWTUCKET
0003	001	1	EXCHANGE	ST	244	Underground	Streetlighting	Luminaire	LUM HPS RWY 250W	Active	250	90435-67003	S14	CITY OF PAWTUCKET
0004	001	0	EXCHANGE	ST	244	Underground	Streetlighting	Pole	POLE METAL =>25FT	Active	0	90435-67003	S14	CITY OF PAWTUCKET
0004	001	1	EXCHANGE	ST	244	Underground	Streetlighting	Luminaire	LUM HPS RWY 250W	Active	250	90435-67003	S14	CITY OF PAWTUCKET
0004	002	0	EXCHANGE	ST	244	Underground	Streetlighting	Pole	POLE METAL =>25FT	Active	0	90435-67003	S14	CITY OF PAWTUCKET
0004	002	1	EXCHANGE	ST	244	Underground	Streetlighting	Luminaire	LUM HPS RWY 250W-TW	Active	250	90435-67003	S14	CITY OF PAWTUCKET
0004	002	2	EXCHANGE	ST	244	Underground	Streetlighting	Luminaire	LUM HPS RWY 250W	Active	250	90435-67003	S14	CITY OF PAWTUCKET
0005	000	0	EXCHANGE	ST	244	Underground	Streetlighting	Pole	POLE METAL =>25FT	Active	0	90435-67003	S14	CITY OF PAWTUCKET
0005	000	1	EXCHANGE	ST	244	Underground	Streetlighting	Luminaire	LUM HPS RWY 250W	Active	250	90435-67003	S14	CITY OF PAWTUCKET
0006	000	0	EXCHANGE	ST	244	Underground	Streetlighting	Pole	POLE METAL =>25FT	Active	0	90435-67003	S14	CITY OF PAWTUCKET
0006	000	1	EXCHANGE	ST	244	Underground	Streetlighting	Luminaire	LUM HPS RWY 250W	Active	250	90435-67003	S14	CITY OF PAWTUCKET
0007	000	0	EXCHANGE	ST	244	Underground	Streetlighting	Pole	POLE METAL =>25FT	Active	0	90435-67003	S14	CITY OF PAWTUCKET
0007	000	1	EXCHANGE	ST	244	Underground	Streetlighting	Luminaire	LUM HPS RWY 250W	Active	250	90435-67003	S14	CITY OF PAWTUCKET
0008	000	1	EXCHANGE	ST	244	Overhead	Distribution	Luminaire	LUM HPS RWY 250W	Active	250	90435-67003	S14	CITY OF PAWTUCKET
0009	000	0	EXCHANGE	ST	244	Underground	Streetlighting	Pole	POLE METAL =>25FT	Active	0	90435-67003	S14	CITY OF PAWTUCKET
0009	000	1	EXCHANGE	ST	244	Underground	Streetlighting	Luminaire	LUM HPS RWY 250W	Active	250	90435-67003	S14	CITY OF PAWTUCKET
0010	000	0	EXCHANGE	ST	244	Underground	Streetlighting	Pole	POLE METAL =>25FT	Active	0	90435-67003	S14	CITY OF PAWTUCKET
0010	000	1	EXCHANGE	ST	244	Underground	Streetlighting	Luminaire	LUM HPS RWY 250W	Active	250	90435-67003	S14	CITY OF PAWTUCKET
0011	000	0	EXCHANGE	ST	244	Underground	Streetlighting	Pole	POLE METAL =>25FT	Active	0	90435-67003	S14	CITY OF PAWTUCKET
0011	000	1	EXCHANGE	ST	244	Underground	Streetlighting	Luminaire	LUM HPS RWY 250W	Active	250	90435-67003	S14	CITY OF PAWTUCKET
0012	000	0	EXCHANGE	ST	244	Underground	Streetlighting	Pole	POLE METAL =>25FT	Active	0	90435-67003	S14	CITY OF PAWTUCKET
0012	000	1	EXCHANGE	ST	244	Underground	Streetlighting	Luminaire	LUM HPS RWY 250W	Active	250	90435-67003	S14	CITY OF PAWTUCKET
0013	000	0	EXCHANGE	ST	244	Underground	Streetlighting	Pole	POLE METAL =>25FT	Active	0	90435-67003	S14	CITY OF PAWTUCKET
0013	000	1	EXCHANGE	ST	244	Underground	Streetlighting	Luminaire	LUM HPS RWY 250W	Active	250	90435-67003	S14	CITY OF PAWTUCKET
0017	000	0	EXCHANGE	ST	244	Underground	Streetlighting	Pole	POLE METAL =>25FT	Active	0	90435-67003	S14	CITY OF PAWTUCKET
0017	000	1	EXCHANGE	ST	244	Underground	Streetlighting	Luminaire	LUM HPS RWY 250W	Active	250	90435-67003	S14	CITY OF PAWTUCKET
0022	000	1	EXCHANGE	ST	244	Overhead	Distribution	Luminaire	LUM HPS RWY 250W	Active	250	90435-67003	S14	CITY OF PAWTUCKET
0025	000	0	EXCHANGE	ST	244	Underground	Streetlighting	Pole	POLE METAL =>25FT	Active	0	90435-67003	S14	CITY OF PAWTUCKET
0025	000	1	EXCHANGE	ST	244	Underground	Streetlighting	Luminaire	LUM HPS RWY 250W	Active	250	90435-67003	S14	CITY OF PAWTUCKET
0027	000	1	EXCHANGE	ST	244	Overhead	Distribution	Luminaire	LUM HPS RWY 250W	Active	250	90435-67003	S14	CITY OF PAWTUCKET
0029	000	0	EXCHANGE	ST	244	Underground	Streetlighting	Pole	POLE METAL =>25FT	Active	0	90435-67003	S14	CITY OF PAWTUCKET
0029	000	1	EXCHANGE	ST	244	Underground	Streetlighting	Luminaire	LUM HPS RWY 250W	Active	250	90435-67003	S14	CITY OF PAWTUCKET
0001	000	1	EXETER	AVE	245	Overhead	Distribution	Luminaire	LUM HPS RWY 100W	Active	100	90435-67003	S14	CITY OF PAWTUCKET
0002	000	1	EXETER	AVE	245	Overhead	Distribution	Luminaire	LUM HPS RWY 100W	Active	100	90435-67003	S14	CITY OF PAWTUCKET
0003	000	1	EXETER	AVE	245	Overhead	Distribution	Luminaire	LUM HPS RWY 100W	Active	100	90435-67003	S14	CITY OF PAWTUCKET
0006	000	1	EXETER	AVE	245	Overhead	Distribution	Luminaire	LUM HPS RWY 70W	Active	70	90435-67003	S14	CITY OF PAWTUCKET
0008	000	2	EXETER	AVE	245	Overhead	Distribution	Luminaire	LUM HPS RWY 100W	Active	100	90435-67003	S14	CITY OF PAWTUCKET
0009	000	1	EXETER	AVE	245	Overhead	Distribution	Luminaire	LUM HPS RWY 70W	Active	70	90435-67003	S14	CITY OF PAWTUCKET
0003	000	1	FAIRLAWN	AVE	246	Overhead	Distribution	Luminaire	LUM HPS RWY 70W	Active	70	90435-67003	S14	CITY OF PAWTUCKET
0004	000	1	FAIRLAWN	AVE	246	Overhead	Distribution	Luminaire	LUM HPS RWY 70W	Active	70	90435-67003	S14	CITY OF PAWTUCKET
0006	000	1	FAIRLAWN	AVE	246	Overhead	Distribution	Luminaire	LUM HPS RWY 70W	Active	70	90435-67003	S14	CITY OF PAWTUCKET
0007	000	1	FAIRLAWN	AVE	246	Overhead	Distribution	Luminaire	LUM HPS RWY 70W	Active	70	90435-67003	S14	CITY OF PAWTUCKET
0009	000	1	FAIRLAWN	AVE	246	Overhead	Distribution	Luminaire	LUM HPS RWY 70W	Active	70	90435-67003	S14	CITY OF PAWTUCKET
0001	000	1	FAIRMONT	AVE	247	Overhead	Distribution	Luminaire	LUM HPS RWY 70W	Active	70	90435-67003	S14	CITY OF PAWTUCKET
0003	000	1	FAIRMONT	AVE	247	Overhead	Distribution	Luminaire	LUM HPS RWY 70W	Active	70	90435-67003	S14	CITY OF PAWTUCKET
0005	000	1	FAIRMONT	AVE	247	Overhead	Distribution	Luminaire	LUM HPS RWY 50W	Active	50	90435-67003	S14	CITY OF PAWTUCKET
0003	000	1	FAIRVIEW	AVE	248	Overhead	Distribution	Luminaire	LUM HPS RWY 70W	Active	70	90435-67003	S14	CITY OF PAWTUCKET
0005	000	1	FAIRVIEW	AVE	248	Overhead	Distribution	Luminaire	LUM HPS RWY 70W	Active	70	90435-67003	S14	CITY OF PAWTUCKET
0007	000	1	FAIRVIEW	AVE	248	Overhead	Distribution	Luminaire	LUM HPS RWY 70W	Active	70	90435-67003	S14	CITY OF PAWTUCKET
0009	000	1	FAIRVIEW	AVE	248	Overhead	Distribution	Luminaire	LUM HPS RWY 70W	Active	70	90435-67003	S14	CITY OF PAWTUCKET
0002	000	1	FARNUM	ST	249	Overhead	Distribution	Luminaire	LUM HPS RWY 70W	Active	70	90435-67003	S14	CITY OF PAWTUCKET
0004	000	1	FARNUM	ST	249	Overhead	Distribution	Luminaire	LUM HPS RWY 70W	Active	70	90435-67003	S14	CITY OF PAWTUCKET
0008	000	1	FARRELL	ST	250	Overhead	Distribution	Luminaire	LUM HPS RWY 70W	Active	70	90435-67003	S14	CITY OF PAWTUCKET
0002	000	1	FEDERAL	ST	251	Overhead	Distribution	Luminaire	LUM HPS RWY 70W	Active	70	90435-67003	S14	CITY OF PAWTUCKET
0004	000	1	FEDERAL	ST	251	Overhead	Distribution	Luminaire	LUM HPS RWY 70W	Active	70	90435-67003	S14	CITY OF PAWTUCKET
0007	000	1	FEDERAL	ST	251	Overhead	Distribution	Luminaire	LUM HPS RWY 70W	Active	70	90435-67003	S14	CITY OF PAWTUCKET
0002	000	1	FELSMERE	AVE	252	Overhead	Distribution	Luminaire	LUM HPS RWY 70W	Active	70	90435-67003	S14	CITY OF PAWTUCKET
0004	000	1	FELSMERE	AVE	252	Overhead	Distribution	Luminaire	LUM HPS RWY 70W	Active	70	90435-67003	S14	CITY OF PAWTUCKET
0006	000	1	FELSMERE	AVE	252	Overhead	Distribution	Luminaire	LUM HPS RWY 70W	Active	70	90435-67003	S14	CITY OF PAWTUCKET

0008	000	1	FELSMERE	AVE	252	Overhead	Distribution	Luminaire	LUM HPS RWY 70W	Active	70	90435-67003	S14	CITY OF PAWTUCKET
0003	000	1	FENNER	ST	253	Overhead	Distribution	Luminaire	LUM HPS RWY 70W	Active	70	90435-67003	S14	CITY OF PAWTUCKET
0004	000	1	FENNER	ST	253	Overhead	Distribution	Luminaire	LUM HPS RWY 70W	Active	70	90435-67003	S14	CITY OF PAWTUCKET
0006	000	1	FENNER	ST	253	Overhead	Distribution	Luminaire	LUM HPS RWY 70W	Active	70	90435-67003	S14	CITY OF PAWTUCKET
0009	000	1	FENNER	ST	253	Overhead	Distribution	Luminaire	LUM HPS RWY 70W	Active	70	90435-67003	S14	CITY OF PAWTUCKET
0002	000	1	FENWOOD	AVE	254	Overhead	Distribution	Luminaire	LUM HPS RWY 70W	Active	70	90435-67003	S14	CITY OF PAWTUCKET
0003	000	1	FENWOOD	AVE	254	Overhead	Distribution	Luminaire	LUM HPS RWY 70W	Active	70	90435-67003	S14	CITY OF PAWTUCKET
0004	000	1	FENWOOD	AVE	254	Overhead	Distribution	Luminaire	LUM HPS RWY 70W	Active	70	90435-67003	S14	CITY OF PAWTUCKET
0005	000	1	FENWOOD	AVE	254	Overhead	Distribution	Luminaire	LUM HPS RWY 70W	Active	70	90435-67003	S14	CITY OF PAWTUCKET
0006	000	1	FERN	ST	255	Overhead	Distribution	Luminaire	LUM HPS RWY 70W	Active	70	90435-67003	S14	CITY OF PAWTUCKET
0008	000	1	FERN	ST	255	Overhead	Distribution	Luminaire	LUM HPS RWY 70W	Active	70	90435-67003	S14	CITY OF PAWTUCKET
0010	000	1	FERN	ST	255	Overhead	Distribution	Luminaire	LUM HPS RWY 70W	Active	70	90435-67003	S14	CITY OF PAWTUCKET
0002	000	1	FERNCREST	DR	256	Overhead	Distribution	Luminaire	LUM HPS RWY 70W	Active	70	90435-67003	S14	CITY OF PAWTUCKET
0004	000	1	FERNCREST	DR	256	Overhead	Distribution	Luminaire	LUM HPS RWY 70W	Active	70	90435-67003	S14	CITY OF PAWTUCKET
0006	000	1	FERNCREST	DR	256	Overhead	Distribution	Luminaire	LUM HPS RWY 70W	Active	70	90435-67003	S14	CITY OF PAWTUCKET
0002	000	1	FERRIS	ST	257	Overhead	Distribution	Luminaire	LUM HPS RWY 70W	Active	70	90435-67003	S14	CITY OF PAWTUCKET
0004	000	1	FERRIS	ST	257	Overhead	Distribution	Luminaire	LUM HPS RWY 100W	Active	100	90435-67003	S14	CITY OF PAWTUCKET
0007	000	1	FERRIS	ST	257	Overhead	Distribution	Luminaire	LUM HPS RWY 70W	Active	70	90435-67003	S14	CITY OF PAWTUCKET
0008	000	1	FERRIS	ST	257	Overhead	Distribution	Luminaire	LUM HPS RWY 70W	Active	70	90435-67003	S14	CITY OF PAWTUCKET
0010	000	1	FERRIS	ST	257	Overhead	Distribution	Luminaire	LUM HPS RWY 70W	Active	70	90435-67003	S14	CITY OF PAWTUCKET
0012	000	1	FERRIS	ST	257	Overhead	Distribution	Luminaire	LUM HPS RWY 70W	Active	70	90435-67003	S14	CITY OF PAWTUCKET
0014	000	1	FERRIS	ST	257	Overhead	Distribution	Luminaire	LUM HPS RWY 70W	Active	70	90435-67003	S14	CITY OF PAWTUCKET
0002	000	1	FIELD	ST	258	Overhead	Distribution	Luminaire	LUM HPS RWY 70W	Active	70	90435-67003	S14	CITY OF PAWTUCKET
0004	000	1	FIELD	ST	258	Overhead	Distribution	Luminaire	LUM HPS RWY 50W	Active	50	90435-67003	S14	CITY OF PAWTUCKET
0002	000	1	FILLMORE	ST	259	Overhead	Distribution	Luminaire	LUM HPS RWY 70W	Active	70	90435-67003	S14	CITY OF PAWTUCKET
0005	000	1	FILLMORE	ST	259	Overhead	Distribution	Luminaire	LUM HPS RWY 70W	Active	70	90435-67003	S14	CITY OF PAWTUCKET
0007	000	1	FILLMORE	ST	259	Overhead	Distribution	Luminaire	LUM HPS RWY 70W	Active	70	90435-67003	S14	CITY OF PAWTUCKET
0009	000	1	FILLMORE	ST	259	Overhead	Distribution	Luminaire	LUM HPS RWY 70W	Active	70	90435-67003	S14	CITY OF PAWTUCKET
0011	000	1	FILLMORE	ST	259	Overhead	Distribution	Luminaire	LUM HPS RWY 70W	Active	70	90435-67003	S14	CITY OF PAWTUCKET
0013	000	1	FILLMORE	ST	259	Overhead	Distribution	Luminaire	LUM HPS RWY 70W	Active	70	90435-67003	S14	CITY OF PAWTUCKET
0009	000	1	FINCH	AVE	260	Overhead	Distribution	Luminaire	LUM HPS RWY 70W	Active	70	90435-67003	S14	CITY OF PAWTUCKET
0011	000	1	FINCH	AVE	260	Overhead	Distribution	Luminaire	LUM HPS RWY 70W	Active	70	90435-67003	S14	CITY OF PAWTUCKET
0013	000	1	FINCH	AVE	260	Overhead	Distribution	Luminaire	LUM HPS RWY 70W	Active	70	90435-67003	S14	CITY OF PAWTUCKET
0014	000	1	FINCH	AVE	260	Overhead	Distribution	Luminaire	LUM HPS RWY 70W	Active	70	90435-67003	S14	CITY OF PAWTUCKET
0016	000	1	FINCH	AVE	260	Overhead	Distribution	Luminaire	LUM HPS RWY 70W	Active	70	90435-67003	S14	CITY OF PAWTUCKET
0017	000	1	FINCH	AVE	260	Overhead	Distribution	Luminaire	LUM HPS RWY 70W	Active	70	90435-67003	S14	CITY OF PAWTUCKET
0019	000	1	FINCH	AVE	260	Overhead	Distribution	Luminaire	LUM HPS RWY 70W	Active	70	90435-67003	S14	CITY OF PAWTUCKET
0021	000	1	FINCH	AVE	260	Overhead	Distribution	Luminaire	LUM HPS RWY 70W	Active	70	90435-67003	S14	CITY OF PAWTUCKET
0002	000	1	FIRST	ST	261	Overhead	Distribution	Luminaire	LUM HPS RWY 70W	Active	70	90435-67003	S14	CITY OF PAWTUCKET
0004	000	1	FIRST	ST	261	Overhead	Distribution	Luminaire	LUM HPS RWY 70W	Active	70	90435-67003	S14	CITY OF PAWTUCKET
0006	000	1	FIRST	ST	261	Overhead	Distribution	Luminaire	LUM HPS RWY 70W	Active	70	90435-67003	S14	CITY OF PAWTUCKET
0009	000	1	FIRST	ST	261	Overhead	Distribution	Luminaire	LUM HPS RWY 70W	Active	70	90435-67003	S14	CITY OF PAWTUCKET
0011	000	1	FIRST	ST	261	Overhead	Distribution	Luminaire	LUM HPS RWY 70W	Active	70	90435-67003	S14	CITY OF PAWTUCKET
0013	000	1	FIRST	ST	261	Overhead	Distribution	Luminaire	LUM HPS RWY 70W	Active	70	90435-67003	S14	CITY OF PAWTUCKET
0015	000	1	FIRST	ST	261	Overhead	Distribution	Luminaire	LUM HPS RWY 70W	Active	70	90435-67003	S14	CITY OF PAWTUCKET
0017	000	1	FIRST	ST	261	Overhead	Distribution	Luminaire	LUM HPS RWY 70W	Active	70	90435-67003	S14	CITY OF PAWTUCKET
0001	000	1	FIUME	ST	262	Overhead	Distribution	Luminaire	LUM HPS RWY 70W	Active	70	90435-67003	S14	CITY OF PAWTUCKET
0003	000	1	FIUME	ST	262	Overhead	Distribution	Luminaire	LUM HPS RWY 70W	Active	70	90435-67003	S14	CITY OF PAWTUCKET
0005	000	1	FIUME	ST	262	Overhead	Distribution	Luminaire	LUM HPS RWY 70W	Active	70	90435-67003	S14	CITY OF PAWTUCKET
0006	000	1	FIUME	ST	262	Overhead	Distribution	Luminaire	LUM HPS RWY 70W	Active	70	90435-67003	S14	CITY OF PAWTUCKET
0008	000	1	FIUME	ST	262	Overhead	Distribution	Luminaire	LUM HPS RWY 70W	Active	70	90435-67003	S14	CITY OF PAWTUCKET
0010	000	1	FIUME	ST	262	Overhead	Distribution	Luminaire	LUM HPS RWY 70W	Active	70	90435-67003	S14	CITY OF PAWTUCKET
0002	000	1	FLEET	ST	263	Overhead	Distribution	Luminaire	LUM HPS RWY 70W	Active	70	90435-67003	S14	CITY OF PAWTUCKET
0001	000	1	FLINT	ST	264	Overhead	Distribution	Luminaire	LUM HPS RWY 70W	Active	70	90435-67003	S14	CITY OF PAWTUCKET
0003	000	1	FLINT	ST	264	Overhead	Distribution	Luminaire	LUM HPS RWY 70W	Active	70	90435-67003	S14	CITY OF PAWTUCKET
0006	000	1	FLINT	ST	264	Overhead	Distribution	Luminaire	LUM HPS RWY 70W	Active	70	90435-67003	S14	CITY OF PAWTUCKET
0008	000	1	FLINT	ST	264	Overhead	Distribution	Luminaire	LUM HPS RWY 70W	Active	70	90435-67003	S14	CITY OF PAWTUCKET
0010	000	1	FLINT	ST	264	Overhead	Distribution	Luminaire	LUM HPS RWY 70W	Active	70	90435-67003	S14	CITY OF PAWTUCKET
0012	000	1	FLINT	ST	264	Overhead	Distribution	Luminaire	LUM HPS RWY 70W	Active	70	90435-67003	S14	CITY OF PAWTUCKET
0014	000	1	FLINT	ST	264	Overhead	Distribution	Luminaire	LUM HPS RWY 70W	Active	70	90435-67003	S14	CITY OF PAWTUCKET
0001	000	1	FLORAL PARK	BLVD	265	Overhead	Distribution	Luminaire	LUM HPS RWY 70W	Active	70	90435-67003	S14	CITY OF PAWTUCKET
0002	000	1	FLORAL PARK	BLVD	265	Overhead	Distribution	Luminaire	LUM HPS RWY 70W	Active	70	90435-67003	S14	CITY OF PAWTUCKET
0003	000	1	FLORAL PARK	BLVD	265	Overhead	Distribution	Luminaire	LUM HPS RWY 70W	Active	70	90435-67003	S14	CITY OF PAWTUCKET

0006	000	1	FLORAL PARK	BLVD	265	Overhead	Distribution	Luminaire	LUM HPS RWY 70W	Active	70	90435-67003	S14	CITY OF PAWTUCKET
0001	000	1	FLORENCE	ST	266	Overhead	Distribution	Luminaire	LUM HPS RWY 70W	Active	70	90435-67003	S14	CITY OF PAWTUCKET
0003	000	1	FLORENCE	ST	266	Overhead	Distribution	Luminaire	LUM HPS RWY 70W	Active	70	90435-67003	S14	CITY OF PAWTUCKET
0006	000	1	FLORENCE	ST	266	Overhead	Distribution	Luminaire	LUM HPS RWY 70W	Active	70	90435-67003	S14	CITY OF PAWTUCKET
0002	000	1	FOLLETT	ST	267	Overhead	Distribution	Luminaire	LUM HPS RWY 70W	Active	70	90435-67003	S14	CITY OF PAWTUCKET
0003	000	1	FOLLETT	ST	267	Overhead	Distribution	Luminaire	LUM HPS RWY 70W	Active	70	90435-67003	S14	CITY OF PAWTUCKET
0005	000	1	FOLLETT	ST	267	Overhead	Distribution	Luminaire	LUM HPS RWY 70W	Active	70	90435-67003	S14	CITY OF PAWTUCKET
0007	000	1	FOLLETT	ST	267	Overhead	Distribution	Luminaire	LUM HPS RWY 70W	Active	70	90435-67003	S14	CITY OF PAWTUCKET
0001	000	1	FOREST	AVE	268	Overhead	Distribution	Luminaire	LUM HPS RWY 70W	Active	70	90435-67003	S14	CITY OF PAWTUCKET
0002	000	1	FOREST	AVE	268	Overhead	Distribution	Luminaire	LUM HPS RWY 70W	Active	70	90435-67003	S14	CITY OF PAWTUCKET
0003	000	1	FOREST	AVE	268	Overhead	Distribution	Luminaire	LUM HPS RWY 70W	Active	70	90435-67003	S14	CITY OF PAWTUCKET
0004	000	1	FOREST	AVE	268	Overhead	Distribution	Luminaire	LUM HPS RWY 70W	Active	70	90435-67003	S14	CITY OF PAWTUCKET
0007	000	1	FOREST	AVE	268	Overhead	Distribution	Luminaire	LUM HPS RWY 70W	Active	70	90435-67003	S14	CITY OF PAWTUCKET
0010	000	1	FOREST	AVE	268	Overhead	Distribution	Luminaire	LUM HPS RWY 70W	Active	70	90435-67003	S14	CITY OF PAWTUCKET
0001	000	1	FORTIN	AVE	269	Overhead	Distribution	Luminaire	LUM HPS RWY 70W	Active	70	90435-67003	S14	CITY OF PAWTUCKET
0002	000	1	FORTIN	AVE	269	Overhead	Distribution	Luminaire	LUM HPS RWY 70W	Active	70	90435-67003	S14	CITY OF PAWTUCKET
0004	000	1	FORTIN	AVE	269	Overhead	Distribution	Luminaire	LUM HPS RWY 70W	Active	70	90435-67003	S14	CITY OF PAWTUCKET
0006	000	1	FORTIN	AVE	269	Overhead	Distribution	Luminaire	LUM HPS RWY 70W	Active	70	90435-67003	S14	CITY OF PAWTUCKET
0008	000	1	FORTIN	AVE	269	Overhead	Distribution	Luminaire	LUM HPS RWY 70W	Active	70	90435-67003	S14	CITY OF PAWTUCKET
0001	000	1	FOSS	AVE	270	Overhead	Distribution	Luminaire	LUM HPS RWY 70W	Active	70	90435-67003	S14	CITY OF PAWTUCKET
0002	000	1	FOSTER	ST	271	Overhead	Distribution	Luminaire	LUM HPS RWY 70W	Active	70	90435-67003	S14	CITY OF PAWTUCKET
0004	000	1	FOSTER	ST	271	Overhead	Distribution	Luminaire	LUM HPS RWY 70W	Active	70	90435-67003	S14	CITY OF PAWTUCKET
0006	000	1	FOSTER	ST	271	Overhead	Distribution	Luminaire	LUM HPS RWY 70W	Active	70	90435-67003	S14	CITY OF PAWTUCKET
0002	000	1	FOUNTAIN	ST	272	Overhead	Distribution	Luminaire	LUM HPS RWY 100W	Active	100	90435-67003	S14	CITY OF PAWTUCKET
0003	001	1	FOUNTAIN	ST	272	Overhead	Distribution	Luminaire	LUM HPS RWY 100W	Active	100	90435-67003	S14	CITY OF PAWTUCKET
0004	000	1	FOUNTAIN	ST	272	Overhead	Distribution	Luminaire	LUM HPS RWY 100W	Active	100	90435-67003	S14	CITY OF PAWTUCKET
0006	000	1	FOUNTAIN	ST	272	Overhead	Distribution	Luminaire	LUM HPS RWY 100W	Active	100	90435-67003	S14	CITY OF PAWTUCKET
0012	000	1	FOUNTAIN	ST	272	Overhead	Distribution	Luminaire	LUM HPS RWY 100W	Active	100	90435-67003	S14	CITY OF PAWTUCKET
0013	000	1	FOUNTAIN	ST	272	Overhead	Distribution	Luminaire	LUM HPS RWY 100W	Active	100	90435-67003	S14	CITY OF PAWTUCKET
0015	000	1	FOUNTAIN	ST	272	Overhead	Distribution	Luminaire	LUM HPS RWY 100W	Active	100	90435-67003	S14	CITY OF PAWTUCKET
0016	001	1	FOUNTAIN	ST	272	Overhead	Distribution	Luminaire	LUM HPS RWY 100W	Active	100	90435-67003	S14	CITY OF PAWTUCKET
0023	000	1	FOUNTAIN	ST	272	Overhead	Distribution	Luminaire	LUM HPS RWY 100W	Active	100	90435-67003	S14	CITY OF PAWTUCKET
0024	000	1	FOUNTAIN	ST	272	Overhead	Distribution	Luminaire	LUM HPS RWY 100W	Active	100	90435-67003	S14	CITY OF PAWTUCKET
0025	000	1	FOUNTAIN	ST	272	Overhead	Distribution	Luminaire	LUM HPS RWY 100W	Active	100	90435-67003	S14	CITY OF PAWTUCKET
0026	000	1	FOUNTAIN	ST	272	Overhead	Distribution	Luminaire	LUM HPS RWY 100W	Active	100	90435-67003	S14	CITY OF PAWTUCKET
0034	000	1	FOUNTAIN	ST	272	Overhead	Distribution	Luminaire	LUM HPS RWY 70W	Active	70	90435-67003	S14	CITY OF PAWTUCKET
0035	000	1	FOUNTAIN	ST	272	Overhead	Distribution	Luminaire	LUM HPS RWY 100W	Active	100	90435-67003	S14	CITY OF PAWTUCKET
0036	000	1	FOUNTAIN	ST	272	Overhead	Distribution	Luminaire	LUM HPS RWY 100W	Active	100	90435-67003	S14	CITY OF PAWTUCKET
0036	001	1	FOUNTAIN	ST	272	Overhead	Distribution	Luminaire	LUM HPS RWY 100W	Active	100	90435-67003	S14	CITY OF PAWTUCKET
0038	000	1	FOUNTAIN	ST	272	Overhead	Distribution	Luminaire	LUM HPS RWY 100W	Active	100	90435-67003	S14	CITY OF PAWTUCKET
0039	001	1	FOUNTAIN	ST	272	Overhead	Distribution	Luminaire	LUM HPS RWY 100W	Active	100	90435-67003	S14	CITY OF PAWTUCKET
0040	001	0	FOUNTAIN	ST	272	Underground	Streetlighting	Pole	POLE METAL =>25FT	Active	0	90435-67003	S14	CITY OF PAWTUCKET
0040	001	1	FOUNTAIN	ST	272	Underground	Streetlighting	Luminaire	LUM HPS RWY 250W	Active	250	90435-67003	S14	CITY OF PAWTUCKET
0042	000	0	FOUNTAIN	ST	272	Underground	Streetlighting	Pole	POLE METAL =>25FT	Active	0	90435-67003	S14	CITY OF PAWTUCKET
0042	000	1	FOUNTAIN	ST	272	Underground	Streetlighting	Luminaire	LUM HPS RWY 250W	Active	250	90435-67003	S14	CITY OF PAWTUCKET
0045	000	0	FOUNTAIN	ST	272	Underground	Streetlighting	Pole	POLE METAL =>25FT	Active	0	90435-67003	S14	CITY OF PAWTUCKET
0045	000	1	FOUNTAIN	ST	272	Underground	Streetlighting	Luminaire	LUM HPS RWY 250W	Active	250	90435-67003	S14	CITY OF PAWTUCKET
0047	000	0	FOUNTAIN	ST	272	Underground	Streetlighting	Pole	POLE METAL =>25FT	Active	0	90435-67003	S14	CITY OF PAWTUCKET
0047	000	1	FOUNTAIN	ST	272	Underground	Streetlighting	Luminaire	LUM HPS RWY 250W	Active	250	90435-67003	S14	CITY OF PAWTUCKET
0049	000	1	FOUNTAIN	ST	272	Overhead	Distribution	Luminaire	LUM HPS RWY 100W	Active	100	90435-67003	S14	CITY OF PAWTUCKET
0050	000	1	FOUNTAIN	ST	272	Overhead	Distribution	Luminaire	LUM HPS RWY 100W	Active	100	90435-67003	S14	CITY OF PAWTUCKET
0051	000	1	FOUNTAIN	ST	272	Overhead	Distribution	Luminaire	LUM HPS RWY 100W	Active	100	90435-67003	S14	CITY OF PAWTUCKET
0052	000	1	FOUNTAIN	ST	272	Overhead	Distribution	Luminaire	LUM HPS RWY 100W	Active	100	90435-67003	S14	CITY OF PAWTUCKET
0053	000	0	FOUNTAIN	ST	272	Underground	Streetlighting	Pole	POLE METAL =>25FT	Active	0	90435-67003	S14	CITY OF PAWTUCKET
0053	000	1	FOUNTAIN	ST	272	Underground	Streetlighting	Luminaire	LUM HPS RWY 250W	Active	250	90435-67003	S14	CITY OF PAWTUCKET
0001	000	1	FOWLER	AVE	273	Overhead	Distribution	Luminaire	LUM HPS RWY 70W	Active	70	90435-67003	S14	CITY OF PAWTUCKET
0004	000	1	FOWLER	AVE	273	Overhead	Distribution	Luminaire	LUM HPS RWY 70W	Active	70	90435-67003	S14	CITY OF PAWTUCKET
0006	000	1	FOWLER	AVE	273	Overhead	Distribution	Luminaire	LUM HPS RWY 70W	Active	70	90435-67003	S14	CITY OF PAWTUCKET
0007	000	1	FOWLER	AVE	273	Overhead	Distribution	Luminaire	LUM HPS RWY 70W	Active	70	90435-67003	S14	CITY OF PAWTUCKET
0009	000	1	FOWLER	AVE	273	Overhead	Distribution	Luminaire	LUM HPS RWY 70W	Active	70	90435-67003	S14	CITY OF PAWTUCKET
0002	000	1	FRANCIS	AVE	274	Overhead	Distribution	Luminaire	LUM HPS RWY 70W	Active	70	90435-67003	S14	CITY OF PAWTUCKET
0004	000	1	FRANCIS	AVE	274	Overhead	Distribution	Luminaire	LUM HPS RWY 100W	Active	100	90435-67003	S14	CITY OF PAWTUCKET
0006	000	1	FRANCIS	AVE	274	Overhead	Distribution	Luminaire	LUM HPS RWY 100W	Active	100	90435-67003	S14	CITY OF PAWTUCKET

0009	000	1	FRANCIS	AVE	274	Overhead	Distribution	Luminaire	LUM HPS RWY 70W	Active	70	90435-67003	S14	CITY OF PAWTUCKET
0012	000	1	FRANCIS	AVE	274	Overhead	Distribution	Luminaire	LUM HPS RWY 70W	Active	70	90435-67003	S14	CITY OF PAWTUCKET
0015	000	1	FRANCIS	AVE	274	Overhead	Distribution	Luminaire	LUM HPS RWY 70W	Active	70	90435-67003	S14	CITY OF PAWTUCKET
0017	000	1	FRANCIS	AVE	274	Overhead	Distribution	Luminaire	LUM HPS RWY 70W	Active	70	90435-67003	S14	CITY OF PAWTUCKET
0019	000	1	FRANCIS	AVE	274	Overhead	Distribution	Luminaire	LUM HPS RWY 70W	Active	70	90435-67003	S14	CITY OF PAWTUCKET
0021	000	1	FRANCIS	AVE	274	Overhead	Distribution	Luminaire	LUM HPS RWY 70W	Active	70	90435-67003	S14	CITY OF PAWTUCKET
0023	000	1	FRANCIS	AVE	274	Overhead	Distribution	Luminaire	LUM HPS RWY 70W	Active	70	90435-67003	S14	CITY OF PAWTUCKET
0025	000	1	FRANCIS	AVE	274	Overhead	Distribution	Luminaire	LUM HPS RWY 70W	Active	70	90435-67003	S14	CITY OF PAWTUCKET
0029	000	1	FRANCIS	AVE	274	Overhead	Distribution	Luminaire	LUM HPS RWY 70W	Active	70	90435-67003	S14	CITY OF PAWTUCKET
0030	000	1	FRANCIS	AVE	274	Overhead	Distribution	Luminaire	LUM HPS RWY 70W	Active	70	90435-67003	S14	CITY OF PAWTUCKET
0031	000	1	FRANCIS	AVE	274	Overhead	Distribution	Luminaire	LUM HPS RWY 70W	Active	70	90435-67003	S14	CITY OF PAWTUCKET
0032	000	1	FRANCIS	AVE	274	Overhead	Distribution	Luminaire	LUM HPS RWY 70W	Active	70	90435-67003	S14	CITY OF PAWTUCKET
0033	000	1	FRANCIS	AVE	274	Overhead	Distribution	Luminaire	LUM HPS RWY 70W	Active	70	90435-67003	S14	CITY OF PAWTUCKET
0001	000	1	FRANK	ST	275	Overhead	Distribution	Luminaire	LUM HPS RWY 70W	Active	70	90435-67003	S14	CITY OF PAWTUCKET
0002	000	1	FRANK	ST	275	Overhead	Distribution	Luminaire	LUM HPS RWY 70W	Active	70	90435-67003	S14	CITY OF PAWTUCKET
0003	000	1	FRANK	ST	275	Overhead	Distribution	Luminaire	LUM HPS RWY 70W	Active	70	90435-67003	S14	CITY OF PAWTUCKET
0004	000	1	FRANK	ST	275	Overhead	Distribution	Luminaire	LUM HPS RWY 70W	Active	70	90435-67003	S14	CITY OF PAWTUCKET
0005	000	1	FRANK	ST	275	Overhead	Distribution	Luminaire	LUM HPS RWY 50W	Active	50	90435-67003	S14	CITY OF PAWTUCKET
0005	000	1	FRED	ST	277	Overhead	Distribution	Luminaire	LUM HPS RWY 70W	Active	70	90435-67003	S14	CITY OF PAWTUCKET
0003	000	1	FREEMAN	ST	278	Overhead	Distribution	Luminaire	LUM HPS RWY 70W	Active	70	90435-67003	S14	CITY OF PAWTUCKET
0001	000	1	FREIGHT	ST	279	Overhead	Distribution	Luminaire	LUM HPS RWY 100W	Active	100	90435-67003	S14	CITY OF PAWTUCKET
0004	000	1	FREIGHT	ST	279	Overhead	Distribution	Luminaire	LUM HPS RWY 100W	Active	100	90435-67003	S14	CITY OF PAWTUCKET
0007	000	1	FREIGHT	ST	279	Overhead	Distribution	Luminaire	LUM HPS RWY 100W	Active	100	90435-67003	S14	CITY OF PAWTUCKET
0009	000	1	FREIGHT	ST	279	Overhead	Distribution	Luminaire	LUM HPS RWY 100W	Active	100	90435-67003	S14	CITY OF PAWTUCKET
0013	000	1	FREIGHT	ST	279	Overhead	Distribution	Luminaire	LUM HPS RWY 70W	Active	70	90435-67003	S14	CITY OF PAWTUCKET
0015	000	1	FREIGHT	ST	279	Overhead	Distribution	Luminaire	LUM HPS RWY 70W	Active	70	90435-67003	S14	CITY OF PAWTUCKET
0003	000	1	FRENCH	ST	280	Overhead	Distribution	Luminaire	LUM HPS RWY 70W	Active	70	90435-67003	S14	CITY OF PAWTUCKET
0005	000	1	FRENCH	ST	280	Overhead	Distribution	Luminaire	LUM HPS RWY 70W	Active	70	90435-67003	S14	CITY OF PAWTUCKET
0007	000	1	FRENCH	ST	280	Overhead	Distribution	Luminaire	LUM HPS RWY 70W	Active	70	90435-67003	S14	CITY OF PAWTUCKET
0009	000	1	FRENCH	ST	280	Overhead	Distribution	Luminaire	LUM HPS RWY 70W	Active	70	90435-67003	S14	CITY OF PAWTUCKET
0010	000	1	FRENCH	ST	280	Overhead	Distribution	Luminaire	LUM HPS RWY 70W	Active	70	90435-67003	S14	CITY OF PAWTUCKET
0001	000	1	FRONT	ST	281	Overhead	Distribution	Luminaire	LUM HPS RWY 70W	Active	70	90435-67003	S14	CITY OF PAWTUCKET
0002	000	1	FRONT	ST	281	Overhead	Distribution	Luminaire	LUM HPS RWY 70W	Active	70	90435-67003	S14	CITY OF PAWTUCKET
0013	000	1	FRONT	ST	281	Overhead	Distribution	Luminaire	LUM HPS RWY 100W	Active	100	90435-67003	S14	CITY OF PAWTUCKET
0016	000	1	FRONT	ST	281	Overhead	Distribution	Luminaire	LUM HPS RWY 70W	Active	70	90435-67003	S14	CITY OF PAWTUCKET
0018	000	1	FRONT	ST	281	Overhead	Distribution	Luminaire	LUM HPS RWY 70W	Active	70	90435-67003	S14	CITY OF PAWTUCKET
0020	000	1	FRONT	ST	281	Overhead	Distribution	Luminaire	LUM HPS RWY 70W	Active	70	90435-67003	S14	CITY OF PAWTUCKET
0023	000	1	FRONT	ST	281	Overhead	Distribution	Luminaire	LUM HPS RWY 70W	Active	70	90435-67003	S14	CITY OF PAWTUCKET
0024	000	1	FRONT	ST	281	Overhead	Distribution	Luminaire	LUM HPS RWY 100W	Active	100	90435-67003	S14	CITY OF PAWTUCKET
0025	000	1	FRONT	ST	281	Overhead	Distribution	Luminaire	LUM HPS RWY 100W	Active	100	90435-67003	S14	CITY OF PAWTUCKET
0027	000	1	FRONT	ST	281	Overhead	Distribution	Luminaire	LUM HPS RWY 100W	Active	100	90435-67003	S14	CITY OF PAWTUCKET
0002	000	1	FRUIT	ST	283	Overhead	Distribution	Luminaire	LUM HPS RWY 100W	Active	100	90435-67003	S14	CITY OF PAWTUCKET
0002	000	1	FULLER	ST	284	Overhead	Distribution	Luminaire	LUM HPS RWY 70W	Active	70	90435-67003	S14	CITY OF PAWTUCKET
0004	000	1	FULLER	ST	284	Overhead	Distribution	Luminaire	LUM HPS RWY 70W	Active	70	90435-67003	S14	CITY OF PAWTUCKET
0006	000	1	FULLER	ST	284	Overhead	Distribution	Luminaire	LUM HPS RWY 70W	Active	70	90435-67003	S14	CITY OF PAWTUCKET
0008	000	1	FULLER	ST	284	Overhead	Distribution	Luminaire	LUM HPS RWY 70W	Active	70	90435-67003	S14	CITY OF PAWTUCKET
0010	000	1	FULLER	ST	284	Overhead	Distribution	Luminaire	LUM HPS RWY 70W	Active	70	90435-67003	S14	CITY OF PAWTUCKET
0015	000	1	FULLER	ST	284	Overhead	Distribution	Luminaire	LUM HPS RWY 70W	Active	70	90435-67003	S14	CITY OF PAWTUCKET
0002	000	1	GARDEN	ST	285	Overhead	Distribution	Luminaire	LUM HPS RWY 70W	Active	70	90435-67003	S14	CITY OF PAWTUCKET
0004	001	1	GARDEN	ST	285	Overhead	Distribution	Luminaire	LUM HPS RWY 70W	Active	70	90435-67003	S14	CITY OF PAWTUCKET
0006	000	1	GARDEN	ST	285	Overhead	Distribution	Luminaire	LUM HPS RWY 70W	Active	70	90435-67003	S14	CITY OF PAWTUCKET
0007	000	1	GARDEN	ST	285	Overhead	Distribution	Luminaire	LUM HPS RWY 70W	Active	70	90435-67003	S14	CITY OF PAWTUCKET
0009	000	0	GARDEN	ST	285	Underground	Streetlighting	Pole	POLE METAL =>25FT	Active	0	90435-67003	S14	CITY OF PAWTUCKET
0009	000	1	GARDEN	ST	285	Underground	Streetlighting	Luminaire	LUM HPS RWY 250W	Active	250	90435-67003	S14	CITY OF PAWTUCKET
0010	002	0	GARDEN	ST	285	Underground	Streetlighting	Pole	POLE METAL =>25FT	Active	0	90435-67003	S14	CITY OF PAWTUCKET
0010	002	1	GARDEN	ST	285	Underground	Streetlighting	Luminaire	LUM HPS RWY 250W	Active	250	90435-67003	S14	CITY OF PAWTUCKET
0011	000	1	GARDEN	ST	285	Overhead	Distribution	Luminaire	LUM HPS RWY 100W	Active	100	90435-67003	S14	CITY OF PAWTUCKET
0013	000	1	GARDEN	ST	285	Overhead	Distribution	Luminaire	LUM HPS RWY 70W	Active	70	90435-67003	S14	CITY OF PAWTUCKET
0015	000	1	GARDEN	ST	285	Overhead	Distribution	Luminaire	LUM HPS RWY 70W	Active	70	90435-67003	S14	CITY OF PAWTUCKET
0016	000	1	GARDEN	ST	285	Overhead	Distribution	Luminaire	LUM HPS RWY 70W	Active	70	90435-67003	S14	CITY OF PAWTUCKET
0018	000	1	GARDEN	ST	285	Overhead	Distribution	Luminaire	LUM HPS RWY 70W	Active	70	90435-67003	S14	CITY OF PAWTUCKET
0021	000	1	GARDEN	ST	285	Overhead	Distribution	Luminaire	LUM HPS RWY 70W	Active	70	90435-67003	S14	CITY OF PAWTUCKET
0023	000	1	GARDEN	ST	285	Overhead	Distribution	Luminaire	LUM HPS RWY 70W	Active	70	90435-67003	S14	CITY OF PAWTUCKET

0024	000	1	GARDEN	ST	285	Overhead	Distribution	Luminaire	LUM HPS RWY 100W	Active	100	90435-67003	S14	CITY OF PAWTUCKET
0002	000	1	GARDNER	ST	286	Overhead	Distribution	Luminaire	LUM HPS RWY 70W	Active	70	90435-67003	S14	CITY OF PAWTUCKET
0002	000	1	GARRITY	ST	287	Overhead	Distribution	Luminaire	LUM HPS RWY 70W	Active	70	90435-67003	S14	CITY OF PAWTUCKET
0004	000	1	GARRITY	ST	287	Overhead	Distribution	Luminaire	LUM HPS RWY 70W	Active	70	90435-67003	S14	CITY OF PAWTUCKET
0005	000	1	GARRITY	ST	287	Overhead	Distribution	Luminaire	LUM HPS RWY 70W	Active	70	90435-67003	S14	CITY OF PAWTUCKET
0006	000	1	GARRITY	ST	287	Overhead	Distribution	Luminaire	LUM HPS RWY 70W	Active	70	90435-67003	S14	CITY OF PAWTUCKET
0001	000	1	GATES	ST	288	Overhead	Distribution	Luminaire	LUM HPS RWY 70W	Active	70	90435-67003	S14	CITY OF PAWTUCKET
0003	000	1	GATES	ST	288	Overhead	Distribution	Luminaire	LUM HPS RWY 70W	Active	70	90435-67003	S14	CITY OF PAWTUCKET
0006	000	1	GATES	ST	288	Overhead	Distribution	Luminaire	LUM HPS RWY 70W	Active	70	90435-67003	S14	CITY OF PAWTUCKET
0015	000	1	GATES	ST	288	Overhead	Distribution	Luminaire	LUM HPS RWY 70W	Active	70	90435-67003	S14	CITY OF PAWTUCKET
0016	000	1	GATES	ST	288	Overhead	Distribution	Luminaire	LUM HPS RWY 70W	Active	70	90435-67003	S14	CITY OF PAWTUCKET
0018	000	1	GATES	ST	288	Overhead	Distribution	Luminaire	LUM HPS RWY 70W	Active	70	90435-67003	S14	CITY OF PAWTUCKET
0020	000	1	GATES	ST	288	Overhead	Distribution	Luminaire	LUM HPS RWY 70W	Active	70	90435-67003	S14	CITY OF PAWTUCKET
0002	000	1	GENEVA	ST	289	Overhead	Distribution	Luminaire	LUM HPS RWY 70W	Active	70	90435-67003	S14	CITY OF PAWTUCKET
0003	000	1	GENEVA	ST	289	Overhead	Distribution	Luminaire	LUM HPS RWY 70W	Active	70	90435-67003	S14	CITY OF PAWTUCKET
0004	000	1	GENEVA	ST	289	Overhead	Distribution	Luminaire	LUM HPS RWY 70W	Active	70	90435-67003	S14	CITY OF PAWTUCKET
0006	000	1	GENEVA	ST	289	Overhead	Distribution	Luminaire	LUM HPS RWY 70W	Active	70	90435-67003	S14	CITY OF PAWTUCKET
0007	000	1	GENEVA	ST	289	Overhead	Distribution	Luminaire	LUM HPS RWY 70W	Active	70	90435-67003	S14	CITY OF PAWTUCKET
0008	000	1	GENEVA	ST	289	Overhead	Distribution	Luminaire	LUM HPS RWY 70W	Active	70	90435-67003	S14	CITY OF PAWTUCKET
0001	000	0	GEORGE	ST	290	Underground	Streetlighting	Pole	POLE METAL =>25FT	Active	0	90435-67003	S14	CITY OF PAWTUCKET
0001	000	1	GEORGE	ST	290	Underground	Streetlighting	Luminaire	LUM HPS RWY 250W-TW	Active	250	90435-67003	S14	CITY OF PAWTUCKET
0001	000	2	GEORGE	ST	290	Underground	Streetlighting	Luminaire	LUM HPS RWY 250W	Active	250	90435-67003	S14	CITY OF PAWTUCKET
0001	001	0	GEORGE	ST	290	Underground	Streetlighting	Pole	POLE METAL =>25FT	Active	0	90435-67003	S14	CITY OF PAWTUCKET
0001	001	1	GEORGE	ST	290	Underground	Streetlighting	Luminaire	LUM HPS RWY 250W-TW	Active	250	90435-67003	S14	CITY OF PAWTUCKET
0001	001	2	GEORGE	ST	290	Underground	Streetlighting	Luminaire	LUM HPS RWY 250W	Active	250	90435-67003	S14	CITY OF PAWTUCKET
0002	000	0	GEORGE	ST	290	Underground	Streetlighting	Pole	POLE METAL =>25FT	Active	0	90435-67003	S14	CITY OF PAWTUCKET
0002	000	1	GEORGE	ST	290	Underground	Streetlighting	Luminaire	LUM HPS RWY 250W-TW	Active	250	90435-67003	S14	CITY OF PAWTUCKET
0002	000	2	GEORGE	ST	290	Underground	Streetlighting	Luminaire	LUM HPS RWY 250W	Active	250	90435-67003	S14	CITY OF PAWTUCKET
0002	001	0	GEORGE	ST	290	Underground	Streetlighting	Pole	POLE METAL =>25FT	Active	0	90435-67003	S14	CITY OF PAWTUCKET
0002	001	1	GEORGE	ST	290	Underground	Streetlighting	Luminaire	LUM HPS RWY 250W-TW	Active	250	90435-67003	S14	CITY OF PAWTUCKET
0002	001	2	GEORGE	ST	290	Underground	Streetlighting	Luminaire	LUM HPS RWY 250W	Active	250	90435-67003	S14	CITY OF PAWTUCKET
0003	000	0	GEORGE	ST	290	Underground	Streetlighting	Pole	POLE METAL =>25FT	Active	0	90435-67003	S14	CITY OF PAWTUCKET
0003	000	1	GEORGE	ST	290	Underground	Streetlighting	Luminaire	LUM HPS RWY 250W-TW	Active	250	90435-67003	S14	CITY OF PAWTUCKET
0003	000	2	GEORGE	ST	290	Underground	Streetlighting	Luminaire	LUM HPS RWY 250W	Active	250	90435-67003	S14	CITY OF PAWTUCKET
0003	001	0	GEORGE	ST	290	Underground	Streetlighting	Pole	POLE METAL =>25FT	Active	0	90435-67003	S14	CITY OF PAWTUCKET
0003	001	1	GEORGE	ST	290	Underground	Streetlighting	Luminaire	LUM HPS RWY 250W-TW	Active	250	90435-67003	S14	CITY OF PAWTUCKET
0003	001	2	GEORGE	ST	290	Underground	Streetlighting	Luminaire	LUM HPS RWY 250W	Active	250	90435-67003	S14	CITY OF PAWTUCKET
0004	000	0	GEORGE	ST	290	Underground	Streetlighting	Pole	POLE METAL =>25FT	Active	0	90435-67003	S14	CITY OF PAWTUCKET
0004	000	1	GEORGE	ST	290	Underground	Streetlighting	Luminaire	LUM HPS RWY 250W-TW	Active	250	90435-67003	S14	CITY OF PAWTUCKET
0004	000	2	GEORGE	ST	290	Underground	Streetlighting	Luminaire	LUM HPS RWY 250W	Active	250	90435-67003	S14	CITY OF PAWTUCKET
0004	001	0	GEORGE	ST	290	Underground	Streetlighting	Pole	POLE METAL =>25FT	Active	0	90435-67003	S14	CITY OF PAWTUCKET
0004	001	1	GEORGE	ST	290	Underground	Streetlighting	Luminaire	LUM HPS RWY 250W-TW	Active	250	90435-67003	S14	CITY OF PAWTUCKET
0004	001	2	GEORGE	ST	290	Underground	Streetlighting	Luminaire	LUM HPS RWY 250W	Active	250	90435-67003	S14	CITY OF PAWTUCKET
0005	000	1	GEORGE	ST	290	Overhead	Distribution	Luminaire	LUM HPS RWY 250W	Active	250	90435-67003	S14	CITY OF PAWTUCKET
0007	001	0	GEORGE	ST	290	Underground	Streetlighting	Pole	POLE METAL =>25FT	Active	0	90435-67003	S14	CITY OF PAWTUCKET
0007	001	1	GEORGE	ST	290	Underground	Streetlighting	Luminaire	LUM MV RWY 400W	Active	400	90435-67003	S14	CITY OF PAWTUCKET
0010	000	1	GEORGE	ST	290	Overhead	Distribution	Luminaire	LUM HPS RWY 250W	Active	250	90435-67003	S14	CITY OF PAWTUCKET
0011	000	1	GEORGE	ST	290	Overhead	Distribution	Luminaire	LUM HPS RWY 250W	Active	250	90435-67003	S14	CITY OF PAWTUCKET
0012	000	1	GEORGE	ST	290	Overhead	Distribution	Luminaire	LUM HPS RWY 250W	Active	250	90435-67003	S14	CITY OF PAWTUCKET
0013	000	1	GEORGE	ST	290	Overhead	Distribution	Luminaire	LUM HPS RWY 250W	Active	250	90435-67003	S14	CITY OF PAWTUCKET
0016	000	1	GEORGE	ST	290	Overhead	Distribution	Luminaire	LUM HPS RWY 250W	Active	250	90435-67003	S14	CITY OF PAWTUCKET
0017	000	1	GEORGE	ST	290	Overhead	Distribution	Luminaire	LUM HPS RWY 250W	Active	250	90435-67003	S14	CITY OF PAWTUCKET
0019	000	0	GEORGE	ST	290	Underground	Streetlighting	Pole	POLE METAL =>25FT	Active	0	90435-67003	S14	CITY OF PAWTUCKET
0019	000	1	GEORGE	ST	290	Underground	Streetlighting	Luminaire	LUM HPS RWY 250W	Active	250	90435-67003	S14	CITY OF PAWTUCKET
0020	000	0	GEORGE	ST	290	Underground	Streetlighting	Pole	POLE METAL =>25FT	Active	0	90435-67003	S14	CITY OF PAWTUCKET
0020	000	1	GEORGE	ST	290	Underground	Streetlighting	Luminaire	LUM HPS RWY 250W	Active	250	90435-67003	S14	CITY OF PAWTUCKET
0003	031	1	GEORGE R BEN	HWY	770	Overhead	Streetlighting	Luminaire	LUM HPS RWY 250W	Active	250	90435-67003	S14	CITY OF PAWTUCKET
0025	000	1	GEORGE R. BEN	HWY	770	Overhead	Distribution	Luminaire	LUM HPS RWY 100W	Active	100	90435-67003	S14	CITY OF PAWTUCKET
0026	000	1	GEORGE R. BEN	HWY	770	Overhead	Distribution	Luminaire	LUM HPS RWY 250W	Active	250	90435-67003	S14	CITY OF PAWTUCKET
0027	000	1	GEORGE R. BEN	HWY	770	Overhead	Distribution	Luminaire	LUM HPS RWY 250W	Active	250	90435-67003	S14	CITY OF PAWTUCKET
0004	000	1	GERALD	ST	291	Overhead	Distribution	Luminaire	LUM HPS RWY 70W	Active	70	90435-67003	S14	CITY OF PAWTUCKET
0005	000	1	GERALD	ST	291	Overhead	Distribution	Luminaire	LUM HPS FLD 400W	Active	400	90435-67003	S14	CITY OF PAWTUCKET
0002	000	1	GERMANIA	ST	292	Overhead	Distribution	Luminaire	LUM HPS RWY 70W	Active	70	90435-67003	S14	CITY OF PAWTUCKET

0003	000	1	GERMANIA	ST	292	Overhead	Distribution	Luminaire	LUM HPS RWY 70W	Active	70	90435-67003	S14	CITY OF PAWTUCKET
0004	000	1	GERMANIA	ST	292	Overhead	Distribution	Luminaire	LUM HPS RWY 70W	Active	70	90435-67003	S14	CITY OF PAWTUCKET
0001	000	0	GILL	AVE	293	Underground	Streetlighting	Pole	POLE METAL =>25FT	Active	0	90435-67003	S14	CITY OF PAWTUCKET
0001	000	1	GILL	AVE	293	Underground	Streetlighting	Luminaire	LUM HPS RWY 250W	Active	250	90435-67003	S14	CITY OF PAWTUCKET
0003	000	1	GILL	AVE	293	Overhead	Distribution	Luminaire	LUM HPS RWY 70W	Active	70	90435-67003	S14	CITY OF PAWTUCKET
0007	000	1	GILL	AVE	293	Overhead	Distribution	Luminaire	LUM HPS RWY 70W	Active	70	90435-67003	S14	CITY OF PAWTUCKET
0002	000	1	GILMORE	ST	294	Overhead	Distribution	Luminaire	LUM HPS RWY 70W	Active	70	90435-67003	S14	CITY OF PAWTUCKET
0004	000	1	GILMORE	ST	294	Overhead	Distribution	Luminaire	LUM HPS RWY 70W	Active	70	90435-67003	S14	CITY OF PAWTUCKET
0011	000	1	GILMORE	ST	294	Overhead	Distribution	Luminaire	LUM HPS RWY 70W	Active	70	90435-67003	S14	CITY OF PAWTUCKET
0002	000	1	GLEN MEADOW	DR	295	Overhead	Distribution	Luminaire	LUM HPS RWY 70W	Active	70	90435-67003	S14	CITY OF PAWTUCKET
0003	000	1	GLEN MEADOW	DR	295	Overhead	Distribution	Luminaire	LUM HPS RWY 70W	Active	70	90435-67003	S14	CITY OF PAWTUCKET
0005	001	1	GLEN MEADOW	DR	295	Overhead	Distribution	Luminaire	LUM HPS RWY 70W	Active	70	90435-67003	S14	CITY OF PAWTUCKET
0006	000	1	GLEN MEADOW	DR	295	Overhead	Distribution	Luminaire	LUM HPS RWY 70W	Active	70	90435-67003	S14	CITY OF PAWTUCKET
0008	000	1	GLEN MEADOW	DR	295	Overhead	Distribution	Luminaire	LUM HPS RWY 70W	Active	70	90435-67003	S14	CITY OF PAWTUCKET
0010	000	1	GLEN MEADOW	DR	295	Overhead	Distribution	Luminaire	LUM HPS RWY 70W	Active	70	90435-67003	S14	CITY OF PAWTUCKET
0011	000	1	GLEN MEADOW	DR	295	Overhead	Distribution	Luminaire	LUM HPS RWY 70W	Active	70	90435-67003	S14	CITY OF PAWTUCKET
0003	000	1	GLENWOOD	AVE	296	Overhead	Distribution	Luminaire	LUM HPS RWY 70W	Active	70	90435-67003	S14	CITY OF PAWTUCKET
0004	000	1	GLENWOOD	AVE	296	Overhead	Distribution	Luminaire	LUM HPS RWY 70W	Active	70	90435-67003	S14	CITY OF PAWTUCKET
0007	000	1	GLENWOOD	AVE	296	Overhead	Distribution	Luminaire	LUM HPS RWY 70W	Active	70	90435-67003	S14	CITY OF PAWTUCKET
0009	000	1	GLENWOOD	AVE	296	Overhead	Distribution	Luminaire	LUM HPS RWY 70W	Active	70	90435-67003	S14	CITY OF PAWTUCKET
0010	000	1	GLENWOOD	AVE	296	Overhead	Distribution	Luminaire	LUM HPS RWY 70W	Active	70	90435-67003	S14	CITY OF PAWTUCKET
0013	000	1	GLENWOOD	AVE	296	Overhead	Distribution	Luminaire	LUM HPS RWY 70W	Active	70	90435-67003	S14	CITY OF PAWTUCKET
0014	000	1	GLENWOOD	AVE	296	Overhead	Distribution	Luminaire	LUM HPS RWY 70W	Active	70	90435-67003	S14	CITY OF PAWTUCKET
0015	000	1	GLENWOOD	AVE	296	Overhead	Distribution	Luminaire	LUM HPS RWY 70W	Active	70	90435-67003	S14	CITY OF PAWTUCKET
0016	000	1	GLENWOOD	AVE	296	Overhead	Distribution	Luminaire	LUM HPS RWY 70W	Active	70	90435-67003	S14	CITY OF PAWTUCKET
0018	000	1	GLENWOOD	AVE	296	Overhead	Distribution	Luminaire	LUM HPS RWY 70W	Active	70	90435-67003	S14	CITY OF PAWTUCKET
0019	000	1	GLENWOOD	AVE	296	Overhead	Distribution	Luminaire	LUM HPS RWY 70W	Active	70	90435-67003	S14	CITY OF PAWTUCKET
0021	000	1	GLENWOOD	AVE	296	Overhead	Distribution	Luminaire	LUM HPS RWY 70W	Active	70	90435-67003	S14	CITY OF PAWTUCKET
0023	000	1	GLENWOOD	AVE	296	Overhead	Distribution	Luminaire	LUM HPS RWY 70W	Active	70	90435-67003	S14	CITY OF PAWTUCKET
0026	000	1	GLENWOOD	AVE	296	Overhead	Distribution	Luminaire	LUM HPS RWY 70W	Active	70	90435-67003	S14	CITY OF PAWTUCKET
0028	000	1	GLENWOOD	AVE	296	Overhead	Distribution	Luminaire	LUM HPS RWY 70W	Active	70	90435-67003	S14	CITY OF PAWTUCKET
0030	000	1	GLENWOOD	AVE	296	Overhead	Distribution	Luminaire	LUM HPS RWY 70W	Active	70	90435-67003	S14	CITY OF PAWTUCKET
0035	000	1	GLENWOOD	AVE	296	Overhead	Distribution	Luminaire	LUM HPS RWY 70W	Active	70	90435-67003	S14	CITY OF PAWTUCKET
0003	000	1	GLORIA	ST	297	Overhead	Distribution	Luminaire	LUM HPS RWY 70W	Active	70	90435-67003	S14	CITY OF PAWTUCKET
0005	000	1	GLORIA	ST	297	Overhead	Distribution	Luminaire	LUM HPS RWY 70W	Active	70	90435-67003	S14	CITY OF PAWTUCKET
0007	000	1	GLORIA	ST	297	Overhead	Distribution	Luminaire	LUM HPS RWY 70W	Active	70	90435-67003	S14	CITY OF PAWTUCKET
0010	000	1	GLORIA	ST	297	Overhead	Distribution	Luminaire	LUM HPS RWY 70W	Active	70	90435-67003	S14	CITY OF PAWTUCKET
0012	000	1	GLORIA	ST	297	Overhead	Distribution	Luminaire	LUM HPS RWY 70W	Active	70	90435-67003	S14	CITY OF PAWTUCKET
0001	000	0	GOFF	AVE	298	Underground	Streetlighting	Pole	POLE METAL =>25FT	Active	0	90435-67003	S14	CITY OF PAWTUCKET
0001	000	1	GOFF	AVE	298	Underground	Streetlighting	Luminaire	LUM HPS RWY 250W	Active	250	90435-67003	S14	CITY OF PAWTUCKET
0001	001	0	GOFF	AVE	298	Underground	Streetlighting	Pole	POLE METAL =>25FT	Active	0	90435-67003	S14	CITY OF PAWTUCKET
0001	001	1	GOFF	AVE	298	Underground	Streetlighting	Luminaire	LUM HPS RWY 250W	Active	250	90435-67003	S14	CITY OF PAWTUCKET
0002	000	0	GOFF	AVE	298	Underground	Streetlighting	Pole	POLE METAL =>25FT	Active	0	90435-67003	S14	CITY OF PAWTUCKET
0002	000	1	GOFF	AVE	298	Underground	Streetlighting	Luminaire	LUM HPS RWY 250W	Active	250	90435-67003	S14	CITY OF PAWTUCKET
0002	001	0	GOFF	AVE	298	Underground	Streetlighting	Pole	POLE METAL =>25FT	Active	0	90435-67003	S14	CITY OF PAWTUCKET
0002	001	1	GOFF	AVE	298	Underground	Streetlighting	Luminaire	LUM HPS RWY 250W	Active	250	90435-67003	S14	CITY OF PAWTUCKET
0003	000	0	GOFF	AVE	298	Underground	Streetlighting	Pole	POLE METAL =>25FT	Active	0	90435-67003	S14	CITY OF PAWTUCKET
0003	000	1	GOFF	AVE	298	Underground	Streetlighting	Luminaire	LUM HPS RWY 250W	Active	250	90435-67003	S14	CITY OF PAWTUCKET
0003	001	0	GOFF	AVE	298	Underground	Streetlighting	Pole	POLE METAL =>25FT	Active	0	90435-67003	S14	CITY OF PAWTUCKET
0003	001	1	GOFF	AVE	298	Underground	Streetlighting	Luminaire	LUM HPS RWY 250W	Active	250	90435-67003	S14	CITY OF PAWTUCKET
0004	000	0	GOFF	AVE	298	Underground	Streetlighting	Pole	POLE METAL =>25FT	Active	0	90435-67003	S14	CITY OF PAWTUCKET
0004	000	1	GOFF	AVE	298	Underground	Streetlighting	Luminaire	LUM HPS RWY 250W	Active	250	90435-67003	S14	CITY OF PAWTUCKET
0004	001	0	GOFF	AVE	298	Underground	Streetlighting	Pole	POLE METAL =>25FT	Active	0	90435-67003	S14	CITY OF PAWTUCKET
0004	001	1	GOFF	AVE	298	Underground	Streetlighting	Luminaire	LUM HPS RWY 250W	Active	250	90435-67003	S14	CITY OF PAWTUCKET
0007	000	1	GOFF	AVE	298	Overhead	Distribution	Luminaire	LUM HPS RWY 100W	Active	100	90435-67003	S14	CITY OF PAWTUCKET
0007	001	1	GOFF	AVE	298	Overhead	Distribution	Luminaire	LUM HPS RWY 100W	Active	100	90435-67003	S14	CITY OF PAWTUCKET
0008	000	1	GOFF	AVE	298	Overhead	Distribution	Luminaire	LUM HPS RWY 100W	Active	100	90435-67003	S14	CITY OF PAWTUCKET
0009	001	1	GOFF	AVE	298	Overhead	Distribution	Luminaire	LUM HPS RWY 100W	Active	100	90435-67003	S14	CITY OF PAWTUCKET
0010	000	1	GOFF	AVE	298	Overhead	Distribution	Luminaire	LUM HPS RWY 100W	Active	100	90435-67003	S14	CITY OF PAWTUCKET
0010	001	1	GOFF	AVE	298	Overhead	Distribution	Luminaire	LUM HPS RWY 100W	Active	100	90435-67003	S14	CITY OF PAWTUCKET
0011	001	1	GOFF	AVE	298	Overhead	Distribution	Luminaire	LUM HPS RWY 100W	Active	100	90435-67003	S14	CITY OF PAWTUCKET
0013	001	1	GOFF	AVE	298	Overhead	Distribution	Luminaire	LUM HPS RWY 100W	Active	100	90435-67003	S14	CITY OF PAWTUCKET
0002	000	1	GOLSEN	ST	753	Overhead	Distribution	Luminaire	LUM HPS RWY 70W	Active	70	90435-67003	S14	CITY OF PAWTUCKET

0001	000	1	GOODING	ST	299	Overhead	Distribution	Luminaire	LUM HPS RWY 100W	Active	100	90435-67003	S14	CITY OF PAWTUCKET
0002	000	1	GOODING	ST	299	Overhead	Distribution	Luminaire	LUM HPS RWY 70W	Active	70	90435-67003	S14	CITY OF PAWTUCKET
0004	000	1	GOODING	ST	299	Overhead	Distribution	Luminaire	LUM HPS RWY 70W	Active	70	90435-67003	S14	CITY OF PAWTUCKET
0006	000	1	GOODING	ST	299	Overhead	Distribution	Luminaire	LUM HPS RWY 70W	Active	70	90435-67003	S14	CITY OF PAWTUCKET
0008	000	1	GOODING	ST	299	Overhead	Distribution	Luminaire	LUM HPS RWY 70W	Active	70	90435-67003	S14	CITY OF PAWTUCKET
0009	000	1	GOODING	ST	299	Overhead	Distribution	Luminaire	LUM HPS RWY 70W	Active	70	90435-67003	S14	CITY OF PAWTUCKET
0010	000	1	GOODING	ST	299	Overhead	Distribution	Luminaire	LUM HPS RWY 70W	Active	70	90435-67003	S14	CITY OF PAWTUCKET
0001	000	1	GORIZIA	ST	300	Overhead	Distribution	Luminaire	LUM HPS RWY 70W	Active	70	90435-67003	S14	CITY OF PAWTUCKET
0002	000	1	GORIZIA	ST	300	Overhead	Distribution	Luminaire	LUM HPS RWY 70W	Active	70	90435-67003	S14	CITY OF PAWTUCKET
0004	000	1	GORIZIA	ST	300	Overhead	Distribution	Luminaire	LUM HPS RWY 70W	Active	70	90435-67003	S14	CITY OF PAWTUCKET
0002	000	1	GOULD	ST	301	Overhead	Distribution	Luminaire	LUM HPS RWY 70W	Active	70	90435-67003	S14	CITY OF PAWTUCKET
0002	000	2	GOULD	ST	301	Overhead	Distribution	Luminaire	LUM HPS FLD 250W	Active	250	40585-10002	S14	PAWTUCKET SCHOOL DEP
0004	000	1	GOULD	ST	301	Overhead	Distribution	Luminaire	LUM HPS FLD 250W	Active	250	40585-10002	S14	PAWTUCKET SCHOOL DEP
0005	000	1	GOULD	ST	301	Overhead	Distribution	Luminaire	LUM HPS RWY 70W	Active	70	90435-67003	S14	CITY OF PAWTUCKET
0002	000	1	GRACE	ST	302	Overhead	Distribution	Luminaire	LUM HPS RWY 250W	Active	250	90435-67003	S14	CITY OF PAWTUCKET
0004	000	1	GRACE	ST	302	Overhead	Distribution	Luminaire	LUM HPS RWY 250W	Active	250	90435-67003	S14	CITY OF PAWTUCKET
0005	000	1	GRACE	ST	302	Overhead	Distribution	Luminaire	LUM HPS RWY 250W	Active	250	90435-67003	S14	CITY OF PAWTUCKET
0006	000	1	GRACE	ST	302	Overhead	Distribution	Luminaire	LUM HPS RWY 250W	Active	250	90435-67003	S14	CITY OF PAWTUCKET
0007	000	1	GRACE	ST	302	Overhead	Distribution	Luminaire	LUM HPS RWY 250W	Active	250	90435-67003	S14	CITY OF PAWTUCKET
0009	000	1	GRACE	ST	302	Overhead	Distribution	Luminaire	LUM HPS RWY 70W	Active	70	90435-67003	S14	CITY OF PAWTUCKET
0010	000	1	GRACE	ST	302	Overhead	Distribution	Luminaire	LUM HPS RWY 70W	Active	70	90435-67003	S14	CITY OF PAWTUCKET
0011	000	1	GRACE	ST	302	Overhead	Distribution	Luminaire	LUM HPS RWY 100W	Active	100	90435-67003	S14	CITY OF PAWTUCKET
0014	000	1	GRACE	ST	302	Overhead	Distribution	Luminaire	LUM HPS RWY 100W	Active	100	90435-67003	S14	CITY OF PAWTUCKET
0016	000	1	GRACE	ST	302	Overhead	Distribution	Luminaire	LUM HPS RWY 100W	Active	100	90435-67003	S14	CITY OF PAWTUCKET
0002	000	1	GRAND	AVE	303	Overhead	Distribution	Luminaire	LUM HPS RWY 100W	Active	100	90435-67003	S14	CITY OF PAWTUCKET
0004	000	1	GRAND	AVE	303	Overhead	Distribution	Luminaire	LUM HPS RWY 100W	Active	100	90435-67003	S14	CITY OF PAWTUCKET
0008	000	1	GRAND	AVE	303	Overhead	Distribution	Luminaire	LUM HPS RWY 100W	Active	100	90435-67003	S14	CITY OF PAWTUCKET
0012	000	1	GRAND	AVE	303	Overhead	Distribution	Luminaire	LUM HPS RWY 100W	Active	100	90435-67003	S14	CITY OF PAWTUCKET
0020	000	1	GRAND	AVE	303	Overhead	Distribution	Luminaire	LUM HPS RWY 70W	Active	70	90435-67003	S14	CITY OF PAWTUCKET
0021	000	1	GRAND	AVE	303	Overhead	Distribution	Luminaire	LUM HPS RWY 70W	Active	70	90435-67003	S14	CITY OF PAWTUCKET
0023	000	1	GRAND	AVE	303	Overhead	Distribution	Luminaire	LUM HPS RWY 70W	Active	70	90435-67003	S14	CITY OF PAWTUCKET
0025	000	1	GRAND	AVE	303	Overhead	Distribution	Luminaire	LUM HPS RWY 70W	Active	70	90435-67003	S14	CITY OF PAWTUCKET
0026	000	1	GRAND	AVE	303	Overhead	Distribution	Luminaire	LUM HPS RWY 100W	Active	100	90435-67003	S14	CITY OF PAWTUCKET
0028	000	1	GRAND	AVE	303	Overhead	Distribution	Luminaire	LUM HPS RWY 100W	Active	100	90435-67003	S14	CITY OF PAWTUCKET
0030	000	1	GRAND	AVE	303	Overhead	Distribution	Luminaire	LUM HPS RWY 100W	Active	100	90435-67003	S14	CITY OF PAWTUCKET
0031	000	1	GRAND	AVE	303	Overhead	Distribution	Luminaire	LUM HPS RWY 70W	Active	70	90435-67003	S14	CITY OF PAWTUCKET
0032	000	1	GRAND	AVE	303	Overhead	Distribution	Luminaire	LUM HPS RWY 70W	Active	70	90435-67003	S14	CITY OF PAWTUCKET
0033	000	1	GRAND	AVE	303	Overhead	Distribution	Luminaire	LUM HPS RWY 70W	Active	70	90435-67003	S14	CITY OF PAWTUCKET
0036	000	1	GRAND	AVE	303	Overhead	Distribution	Luminaire	LUM HPS RWY 70W	Active	70	90435-67003	S14	CITY OF PAWTUCKET
0037	000	1	GRAND	AVE	303	Overhead	Distribution	Luminaire	LUM HPS RWY 70W	Active	70	90435-67003	S14	CITY OF PAWTUCKET
0039	000	1	GRAND	AVE	303	Overhead	Distribution	Luminaire	LUM HPS RWY 70W	Active	70	90435-67003	S14	CITY OF PAWTUCKET
0040	000	1	GRAND	AVE	303	Overhead	Distribution	Luminaire	LUM HPS RWY 70W	Active	70	90435-67003	S14	CITY OF PAWTUCKET
0041	000	1	GRAND	AVE	303	Overhead	Distribution	Luminaire	LUM HPS RWY 70W	Active	70	90435-67003	S14	CITY OF PAWTUCKET
0043	000	1	GRAND	AVE	303	Overhead	Distribution	Luminaire	LUM HPS RWY 70W	Active	70	90435-67003	S14	CITY OF PAWTUCKET
0045	000	1	GRAND	AVE	303	Overhead	Distribution	Luminaire	LUM HPS RWY 70W	Active	70	90435-67003	S14	CITY OF PAWTUCKET
0049	000	1	GRAND	AVE	303	Overhead	Distribution	Luminaire	LUM HPS RWY 70W	Active	70	90435-67003	S14	CITY OF PAWTUCKET
0051	000	1	GRAND	AVE	303	Overhead	Distribution	Luminaire	LUM HPS RWY 70W	Active	70	90435-67003	S14	CITY OF PAWTUCKET
0053	000	1	GRAND	AVE	303	Overhead	Distribution	Luminaire	LUM HPS RWY 70W	Active	70	90435-67003	S14	CITY OF PAWTUCKET
0055	000	1	GRAND	AVE	303	Overhead	Distribution	Luminaire	LUM HPS RWY 70W	Active	70	90435-67003	S14	CITY OF PAWTUCKET
0057	000	1	GRAND	AVE	303	Overhead	Distribution	Luminaire	LUM HPS RWY 70W	Active	70	90435-67003	S14	CITY OF PAWTUCKET
0002	000	1	GRAND VIEW	RD	304	Overhead	Distribution	Luminaire	LUM HPS RWY 70W	Active	70	90435-67003	S14	CITY OF PAWTUCKET
0005	000	1	GRAND VIEW	RD	304	Overhead	Distribution	Luminaire	LUM HPS RWY 70W	Active	70	90435-67003	S14	CITY OF PAWTUCKET
0006	000	1	GRAND VIEW	RD	304	Overhead	Distribution	Luminaire	LUM HPS RWY 70W	Active	70	90435-67003	S14	CITY OF PAWTUCKET
0002	000	1	GRANT	ST	305	Overhead	Distribution	Luminaire	LUM HPS RWY 70W	Active	70	90435-67003	S14	CITY OF PAWTUCKET
0003	000	1	GRANT	ST	305	Overhead	Distribution	Luminaire	LUM HPS RWY 70W	Active	70	90435-67003	S14	CITY OF PAWTUCKET
0002	000	1	GREELEY	ST	306	Overhead	Distribution	Luminaire	LUM HPS RWY 70W	Active	70	90435-67003	S14	CITY OF PAWTUCKET
0004	000	1	GREELEY	ST	306	Overhead	Distribution	Luminaire	LUM HPS RWY 70W	Active	70	90435-67003	S14	CITY OF PAWTUCKET
0007	000	1	GREELEY	ST	306	Overhead	Distribution	Luminaire	LUM HPS RWY 70W	Active	70	90435-67003	S14	CITY OF PAWTUCKET
0009	000	1	GREELEY	ST	306	Overhead	Distribution	Luminaire	LUM HPS RWY 70W	Active	70	90435-67003	S14	CITY OF PAWTUCKET
0011	000	1	GREELEY	ST	306	Overhead	Distribution	Luminaire	LUM HPS RWY 70W	Active	70	90435-67003	S14	CITY OF PAWTUCKET
0013	000	1	GREELEY	ST	306	Overhead	Distribution	Luminaire	LUM HPS RWY 70W	Active	70	90435-67003	S14	CITY OF PAWTUCKET
0002	000	1	GREEN LANE	RD	307	Overhead	Distribution	Luminaire	LUM HPS RWY 70W	Active	70	90435-67003	S14	CITY OF PAWTUCKET
0005	000	1	GREEN LANE	RD	307	Overhead	Distribution	Luminaire	LUM HPS RWY 70W	Active	70	90435-67003	S14	CITY OF PAWTUCKET

0002	000	1	GREENE	ST	308	Overhead	Distribution	Luminaire	LUM HPS RWY 70W	Active	70	90435-67003	S14	CITY OF PAWTUCKET
0004	000	1	GREENE	ST	308	Overhead	Distribution	Luminaire	LUM HPS RWY 70W	Active	70	90435-67003	S14	CITY OF PAWTUCKET
0006	000	1	GREENE	ST	308	Overhead	Distribution	Luminaire	LUM HPS RWY 70W	Active	70	90435-67003	S14	CITY OF PAWTUCKET
0008	000	1	GREENE	ST	308	Overhead	Distribution	Luminaire	LUM HPS RWY 70W	Active	70	90435-67003	S14	CITY OF PAWTUCKET
0009	000	1	GREENE	ST	308	Overhead	Distribution	Luminaire	LUM HPS RWY 70W	Active	70	90435-67003	S14	CITY OF PAWTUCKET
0010	000	1	GREENE	ST	308	Overhead	Distribution	Luminaire	LUM HPS RWY 70W	Active	70	90435-67003	S14	CITY OF PAWTUCKET
0011	000	1	GREENE	ST	308	Overhead	Distribution	Luminaire	LUM HPS RWY 70W	Active	70	90435-67003	S14	CITY OF PAWTUCKET
0012	000	1	GREENE	ST	308	Overhead	Distribution	Luminaire	LUM HPS RWY 70W	Active	70	90435-67003	S14	CITY OF PAWTUCKET
0013	000	1	GREENE	ST	308	Overhead	Distribution	Luminaire	LUM HPS RWY 70W	Active	70	90435-67003	S14	CITY OF PAWTUCKET
0003	000	1	GREENFIELD	ST	309	Overhead	Distribution	Luminaire	LUM HPS RWY 70W	Active	70	90435-67003	S14	CITY OF PAWTUCKET
0005	000	1	GREENFIELD	ST	309	Overhead	Distribution	Luminaire	LUM HPS RWY 70W	Active	70	90435-67003	S14	CITY OF PAWTUCKET
0007	000	1	GREENFIELD	ST	309	Overhead	Distribution	Luminaire	LUM HPS RWY 70W	Active	70	90435-67003	S14	CITY OF PAWTUCKET
0008	000	1	GREENFIELD	ST	309	Overhead	Distribution	Luminaire	LUM HPS RWY 70W	Active	70	90435-67003	S14	CITY OF PAWTUCKET
0002	000	1	GREENSLITT	AVE	310	Overhead	Distribution	Luminaire	LUM HPS RWY 70W	Active	70	90435-67003	S14	CITY OF PAWTUCKET
0004	000	1	GREENSLITT	AVE	310	Overhead	Distribution	Luminaire	LUM HPS RWY 70W	Active	70	90435-67003	S14	CITY OF PAWTUCKET
0005	000	1	GREENSLITT	AVE	310	Overhead	Distribution	Luminaire	LUM HPS RWY 70W	Active	70	90435-67003	S14	CITY OF PAWTUCKET
0007	000	1	GREENSLITT	AVE	310	Overhead	Distribution	Luminaire	LUM HPS RWY 70W	Active	70	90435-67003	S14	CITY OF PAWTUCKET
0009	000	1	GREENSLITT	AVE	310	Overhead	Distribution	Luminaire	LUM HPS RWY 100W	Active	100	90435-67003	S14	CITY OF PAWTUCKET
0010	000	1	GREENSLITT	AVE	310	Overhead	Distribution	Luminaire	LUM HPS RWY 70W	Active	70	90435-67003	S14	CITY OF PAWTUCKET
0012	000	1	GREENSLITT	AVE	310	Overhead	Distribution	Luminaire	LUM HPS RWY 70W	Active	70	90435-67003	S14	CITY OF PAWTUCKET
0014	000	1	GREENSLITT	AVE	310	Overhead	Distribution	Luminaire	LUM HPS RWY 70W	Active	70	90435-67003	S14	CITY OF PAWTUCKET
0018	000	1	GREENSLITT	AVE	310	Overhead	Distribution	Luminaire	LUM HPS RWY 100W	Active	100	90435-67003	S14	CITY OF PAWTUCKET
0019	000	1	GREENSLITT	AVE	310	Overhead	Distribution	Luminaire	LUM HPS RWY 70W	Active	70	90435-67003	S14	CITY OF PAWTUCKET
0022	000	1	GREENSLITT	AVE	310	Overhead	Distribution	Luminaire	LUM HPS RWY 70W	Active	70	90435-67003	S14	CITY OF PAWTUCKET
0002	000	1	GRENVILLE	ST	311	Overhead	Distribution	Luminaire	LUM HPS RWY 100W	Active	100	90435-67003	S14	CITY OF PAWTUCKET
0004	000	1	GRENVILLE	ST	311	Overhead	Distribution	Luminaire	LUM HPS RWY 100W	Active	100	90435-67003	S14	CITY OF PAWTUCKET
0005	000	1	GRENVILLE	ST	311	Overhead	Distribution	Luminaire	LUM HPS RWY 100W	Active	100	90435-67003	S14	CITY OF PAWTUCKET
0002	000	1	GROSVENOR	AVE	312	Overhead	Distribution	Luminaire	LUM HPS RWY 70W	Active	70	90435-67003	S14	CITY OF PAWTUCKET
0004	000	1	GROSVENOR	AVE	312	Overhead	Distribution	Luminaire	LUM HPS RWY 70W	Active	70	90435-67003	S14	CITY OF PAWTUCKET
0007	000	1	GROSVENOR	AVE	312	Overhead	Distribution	Luminaire	LUM HPS RWY 70W	Active	70	90435-67003	S14	CITY OF PAWTUCKET
0009	000	1	GROSVENOR	AVE	312	Overhead	Distribution	Luminaire	LUM HPS RWY 70W	Active	70	90435-67003	S14	CITY OF PAWTUCKET
0010	000	1	GROSVENOR	AVE	312	Overhead	Distribution	Luminaire	LUM HPS RWY 70W	Active	70	90435-67003	S14	CITY OF PAWTUCKET
0011	000	1	GROSVENOR	AVE	312	Overhead	Distribution	Luminaire	LUM HPS RWY 70W	Active	70	90435-67003	S14	CITY OF PAWTUCKET
0012	000	1	GROSVENOR	AVE	312	Overhead	Distribution	Luminaire	LUM HPS RWY 70W	Active	70	90435-67003	S14	CITY OF PAWTUCKET
0015	000	1	GROSVENOR	AVE	312	Overhead	Distribution	Luminaire	LUM HPS RWY 70W	Active	70	90435-67003	S14	CITY OF PAWTUCKET
0016	000	1	GROSVENOR	AVE	312	Overhead	Distribution	Luminaire	LUM HPS RWY 70W	Active	70	90435-67003	S14	CITY OF PAWTUCKET
0003	000	1	GROTTO	AVE	313	Overhead	Distribution	Luminaire	LUM HPS RWY 70W	Active	70	90435-67003	S14	CITY OF PAWTUCKET
0005	000	1	GROTTO	AVE	313	Overhead	Distribution	Luminaire	LUM HPS RWY 70W	Active	70	90435-67003	S14	CITY OF PAWTUCKET
0007	000	1	GROTTO	AVE	313	Overhead	Distribution	Luminaire	LUM HPS RWY 70W	Active	70	90435-67003	S14	CITY OF PAWTUCKET
0012	001	1	GROTTO	AVE	313	Overhead	Distribution	Luminaire	LUM HPS RWY 70W	Active	70	90435-67003	S14	CITY OF PAWTUCKET
0013	000	1	GROTTO	AVE	313	Overhead	Distribution	Luminaire	LUM HPS RWY 70W	Active	70	90435-67003	S14	CITY OF PAWTUCKET
0013	001	1	GROTTO	AVE	313	Overhead	Distribution	Luminaire	LUM HPS RWY 70W	Active	70	90435-67003	S14	CITY OF PAWTUCKET
0014	000	1	GROTTO	AVE	313	Overhead	Distribution	Luminaire	LUM HPS RWY 70W	Active	70	90435-67003	S14	CITY OF PAWTUCKET
0014	001	1	GROTTO	AVE	313	Overhead	Distribution	Luminaire	LUM HPS RWY 70W	Active	70	90435-67003	S14	CITY OF PAWTUCKET
0015	000	1	GROTTO	AVE	313	Overhead	Distribution	Luminaire	LUM HPS RWY 70W	Active	70	90435-67003	S14	CITY OF PAWTUCKET
0016	000	1	GROTTO	AVE	313	Overhead	Distribution	Luminaire	LUM HPS RWY 70W	Active	70	90435-67003	S14	CITY OF PAWTUCKET
0018	000	1	GROTTO	AVE	313	Overhead	Distribution	Luminaire	LUM HPS RWY 100W	Active	100	90435-67003	S14	CITY OF PAWTUCKET
0018	030	1	GROTTO	AVE	313	Overhead	Distribution	Luminaire	LUM HPS FLD 400W	Active	400	90435-67003	S14	CITY OF PAWTUCKET
0018	030	2	GROTTO	AVE	313	Overhead	Distribution	Luminaire	LUM HPS FLD 400W	Active	400	90435-67003	S14	CITY OF PAWTUCKET
0019	000	1	GROTTO	AVE	313	Overhead	Distribution	Luminaire	LUM HPS FLD 400W	Active	400	90435-67003	S14	CITY OF PAWTUCKET
0020	000	1	GROTTO	AVE	313	Overhead	Distribution	Luminaire	LUM HPS RWY 100W	Active	100	90435-67003	S14	CITY OF PAWTUCKET
0020	030	1	GROTTO	AVE	313	Overhead	Distribution	Luminaire	LUM HPS FLD 400W	Active	400	90435-67003	S14	CITY OF PAWTUCKET
0022	000	1	GROTTO	AVE	313	Overhead	Distribution	Luminaire	LUM HPS FLD 400W	Active	400	3371-64002	S14	CITY OF PAWTUCKET
0024	000	1	GROTTO	AVE	313	Overhead	Distribution	Luminaire	LUM HPS RWY 70W	Active	70	90435-67003	S14	CITY OF PAWTUCKET
0025	000	1	GROTTO	AVE	313	Overhead	Distribution	Luminaire	LUM HPS RWY 70W	Active	70	90435-67003	S14	CITY OF PAWTUCKET
0025	000	2	GROTTO	AVE	313	Overhead	Distribution	Luminaire	LUM HPS FLD 400W	Active	400	3371-64002	S14	CITY OF PAWTUCKET
0026	000	1	GROTTO	AVE	313	Overhead	Distribution	Luminaire	LUM HPS RWY 70W	Active	70	90435-67003	S14	CITY OF PAWTUCKET
0027	000	1	GROTTO	AVE	313	Overhead	Distribution	Luminaire	LUM HPS RWY 70W	Active	70	90435-67003	S14	CITY OF PAWTUCKET
0029	000	1	GROTTO	AVE	313	Overhead	Distribution	Luminaire	LUM HPS RWY 70W	Active	70	90435-67003	S14	CITY OF PAWTUCKET
0030	032	1	GROTTO	AVE	313	Overhead	Distribution	Luminaire	LUM HPS FLD 400W	Active	400	28129-72000	S14	PAWTUCKET SCHOOL DEP
0030	041	1	GROTTO	AVE	313	Overhead	Distribution	Luminaire	LUM HPS FLD 400W	Active	400	28129-72000	S14	PAWTUCKET SCHOOL DEP
0030	043	1	GROTTO	AVE	313	Overhead	Distribution	Luminaire	LUM HPS FLD 400W	Active	400	28129-72000	S14	PAWTUCKET SCHOOL DEP
0030	043	2	GROTTO	AVE	313	Overhead	Distribution	Luminaire	LUM HPS FLD 250W	Active	250	3371-64002	S14	CITY OF PAWTUCKET

0031	000	1	GROTTO	AVE	313	Overhead	Distribution	Luminaire	LUM HPS RWY 70W	Active	70	90435-67003	S14	CITY OF PAWTUCKET
0033	000	1	GROTTO	AVE	313	Overhead	Distribution	Luminaire	LUM HPS RWY 250W	Active	250	90435-67003	S14	CITY OF PAWTUCKET
0035	000	1	GROTTO	AVE	313	Overhead	Distribution	Luminaire	LUM HPS RWY 70W	Active	70	90435-67003	S14	CITY OF PAWTUCKET
0037	000	1	GROTTO	AVE	313	Overhead	Distribution	Luminaire	LUM HPS RWY 70W	Active	70	90435-67003	S14	CITY OF PAWTUCKET
0039	000	1	GROTTO	AVE	313	Overhead	Distribution	Luminaire	LUM HPS RWY 70W	Active	70	90435-67003	S14	CITY OF PAWTUCKET
0007	000	1	GROVE	ST	314	Overhead	Distribution	Luminaire	LUM HPS RWY 100W	Active	100	90435-67003	S14	CITY OF PAWTUCKET
0009	000	1	GROVE	ST	314	Overhead	Distribution	Luminaire	LUM HPS RWY 100W	Active	100	90435-67003	S14	CITY OF PAWTUCKET
0002	000	1	HALLIDAY	ST	316	Overhead	Distribution	Luminaire	LUM HPS RWY 70W	Active	70	90435-67003	S14	CITY OF PAWTUCKET
0006	000	1	HAMLET	ST	318	Overhead	Distribution	Luminaire	LUM HPS RWY 70W	Active	70	90435-67003	S14	CITY OF PAWTUCKET
0008	000	1	HAMLET	ST	318	Overhead	Distribution	Luminaire	LUM HPS RWY 70W	Active	70	90435-67003	S14	CITY OF PAWTUCKET
0011	000	1	HAMLET	ST	318	Overhead	Distribution	Luminaire	LUM HPS RWY 70W	Active	70	90435-67003	S14	CITY OF PAWTUCKET
0006	000	1	HANCOCK	ST	319	Overhead	Distribution	Luminaire	LUM HPS RWY 70W	Active	70	90435-67003	S14	CITY OF PAWTUCKET
0007	000	1	HANCOCK	ST	319	Overhead	Distribution	Luminaire	LUM HPS RWY 70W	Active	70	90435-67003	S14	CITY OF PAWTUCKET
0009	000	1	HANCOCK	ST	319	Overhead	Distribution	Luminaire	LUM HPS RWY 70W	Active	70	90435-67003	S14	CITY OF PAWTUCKET
0010	000	1	HANCOCK	ST	319	Overhead	Distribution	Luminaire	LUM HPS RWY 70W	Active	70	90435-67003	S14	CITY OF PAWTUCKET
0003	000	1	HAND	ST	320	Overhead	Distribution	Luminaire	LUM HPS RWY 70W	Active	70	90435-67003	S14	CITY OF PAWTUCKET
0002	000	1	HANOVER	AVE	321	Overhead	Distribution	Luminaire	LUM HPS RWY 100W	Active	100	90435-67003	S14	CITY OF PAWTUCKET
0003	000	1	HANOVER	AVE	321	Overhead	Distribution	Luminaire	LUM HPS RWY 100W	Active	100	90435-67003	S14	CITY OF PAWTUCKET
0006	000	1	HANOVER	AVE	321	Overhead	Distribution	Luminaire	LUM HPS RWY 100W	Active	100	90435-67003	S14	CITY OF PAWTUCKET
0010	000	1	HANOVER	AVE	321	Overhead	Distribution	Luminaire	LUM HPS RWY 100W	Active	100	90435-67003	S14	CITY OF PAWTUCKET
0012	000	1	HANOVER	AVE	321	Overhead	Distribution	Luminaire	LUM HPS RWY 100W	Active	100	90435-67003	S14	CITY OF PAWTUCKET
0017	000	1	HANOVER	AVE	321	Overhead	Distribution	Luminaire	LUM HPS RWY 100W	Active	100	90435-67003	S14	CITY OF PAWTUCKET
0019	000	1	HANOVER	AVE	321	Overhead	Distribution	Luminaire	LUM HPS RWY 100W	Active	100	90435-67003	S14	CITY OF PAWTUCKET
0001	000	1	HARCOURT	AVE	322	Overhead	Distribution	Luminaire	LUM HPS RWY 100W	Active	100	90435-67003	S14	CITY OF PAWTUCKET
0003	000	1	HARCOURT	AVE	322	Overhead	Distribution	Luminaire	LUM HPS RWY 70W	Active	70	90435-67003	S14	CITY OF PAWTUCKET
0006	000	1	HARCOURT	AVE	322	Overhead	Distribution	Luminaire	LUM HPS RWY 70W	Active	70	90435-67003	S14	CITY OF PAWTUCKET
0008	000	1	HARCOURT	AVE	322	Overhead	Distribution	Luminaire	LUM HPS RWY 70W	Active	70	90435-67003	S14	CITY OF PAWTUCKET
0010	000	1	HARCOURT	AVE	322	Overhead	Distribution	Luminaire	LUM HPS RWY 70W	Active	70	90435-67003	S14	CITY OF PAWTUCKET
0001	000	1	HARDING	ST	323	Overhead	Distribution	Luminaire	LUM HPS RWY 70W	Active	70	90435-67003	S14	CITY OF PAWTUCKET
0003	000	1	HARDING	ST	323	Overhead	Distribution	Luminaire	LUM HPS RWY 70W	Active	70	90435-67003	S14	CITY OF PAWTUCKET
0002	000	1	HARRIS	ST	325	Overhead	Distribution	Luminaire	LUM HPS RWY 50W	Active	50	90435-67003	S14	CITY OF PAWTUCKET
0004	000	1	HARRIS	ST	325	Overhead	Distribution	Luminaire	LUM HPS RWY 70W	Active	70	90435-67003	S14	CITY OF PAWTUCKET
0006	000	1	HARRIS	ST	325	Overhead	Distribution	Luminaire	LUM HPS RWY 100W	Active	100	90435-67003	S14	CITY OF PAWTUCKET
0008	000	1	HARRIS	ST	325	Overhead	Distribution	Luminaire	LUM HPS RWY 100W	Active	100	90435-67003	S14	CITY OF PAWTUCKET
0011	000	1	HARRIS	ST	325	Overhead	Distribution	Luminaire	LUM HPS RWY 70W	Active	70	90435-67003	S14	CITY OF PAWTUCKET
0012	000	1	HARRIS	ST	325	Overhead	Distribution	Luminaire	LUM HPS RWY 70W	Active	70	90435-67003	S14	CITY OF PAWTUCKET
0014	000	1	HARRIS	ST	325	Overhead	Distribution	Luminaire	LUM HPS RWY 70W	Active	70	90435-67003	S14	CITY OF PAWTUCKET
0001	000	1	HARRISON	ST	326	Overhead	Distribution	Luminaire	LUM HPS RWY 70W	Active	70	90435-67003	S14	CITY OF PAWTUCKET
0003	000	1	HARRISON	ST	326	Overhead	Distribution	Luminaire	LUM HPS RWY 70W	Active	70	90435-67003	S14	CITY OF PAWTUCKET
0005	000	1	HARRISON	ST	326	Overhead	Distribution	Luminaire	LUM HPS RWY 70W	Active	70	90435-67003	S14	CITY OF PAWTUCKET
0007	000	1	HARRISON	ST	326	Overhead	Distribution	Luminaire	LUM HPS RWY 50W	Active	50	90435-67003	S14	CITY OF PAWTUCKET
0009	000	1	HARRISON	ST	326	Overhead	Distribution	Luminaire	LUM HPS RWY 70W	Active	70	90435-67003	S14	CITY OF PAWTUCKET
0011	000	1	HARRISON	ST	326	Overhead	Distribution	Luminaire	LUM HPS RWY 70W	Active	70	90435-67003	S14	CITY OF PAWTUCKET
0012	000	1	HARRISON	ST	326	Overhead	Distribution	Luminaire	LUM HPS RWY 70W	Active	70	90435-67003	S14	CITY OF PAWTUCKET
0013	000	1	HARRISON	ST	326	Overhead	Distribution	Luminaire	LUM HPS RWY 70W	Active	70	90435-67003	S14	CITY OF PAWTUCKET
0015	000	1	HARRISON	ST	326	Overhead	Distribution	Luminaire	LUM HPS RWY 70W	Active	70	90435-67003	S14	CITY OF PAWTUCKET
0017	000	1	HARRISON	ST	326	Overhead	Distribution	Luminaire	LUM HPS RWY 70W	Active	70	90435-67003	S14	CITY OF PAWTUCKET
0019	000	1	HARRISON	ST	326	Overhead	Distribution	Luminaire	LUM HPS RWY 70W	Active	70	90435-67003	S14	CITY OF PAWTUCKET
0020	000	1	HARRISON	ST	326	Overhead	Distribution	Luminaire	LUM HPS RWY 70W	Active	70	90435-67003	S14	CITY OF PAWTUCKET
0021	001	1	HARRISON	ST	326	Overhead	Distribution	Luminaire	LUM HPS RWY 70W	Active	70	90435-67003	S14	CITY OF PAWTUCKET
0023	000	1	HARRISON	ST	326	Overhead	Distribution	Luminaire	LUM HPS RWY 70W	Active	70	90435-67003	S14	CITY OF PAWTUCKET
0023	001	1	HARRISON	ST	326	Overhead	Distribution	Luminaire	LUM HPS RWY 70W	Active	70	90435-67003	S14	CITY OF PAWTUCKET
0025	000	1	HARRISON	ST	326	Overhead	Distribution	Luminaire	LUM HPS RWY 70W	Active	70	90435-67003	S14	CITY OF PAWTUCKET
0027	000	1	HARRISON	ST	326	Overhead	Distribution	Luminaire	LUM HPS RWY 70W	Active	70	90435-67003	S14	CITY OF PAWTUCKET
0029	000	1	HARRISON	ST	326	Overhead	Distribution	Luminaire	LUM HPS RWY 70W	Active	70	90435-67003	S14	CITY OF PAWTUCKET
0001	000	1	HARVARD	ST	327	Overhead	Distribution	Luminaire	LUM HPS RWY 70W	Active	70	90435-67003	S14	CITY OF PAWTUCKET
0002	000	1	HARVARD	ST	327	Overhead	Distribution	Luminaire	LUM HPS RWY 70W	Active	70	90435-67003	S14	CITY OF PAWTUCKET
0003	000	1	HARVARD	ST	327	Overhead	Distribution	Luminaire	LUM HPS RWY 100W	Active	100	90435-67003	S14	CITY OF PAWTUCKET
0005	000	1	HARVARD	ST	327	Overhead	Distribution	Luminaire	LUM HPS RWY 70W	Active	70	90435-67003	S14	CITY OF PAWTUCKET
0001	000	1	HARVEY	ST	328	Overhead	Distribution	Luminaire	LUM HPS RWY 70W	Active	70	90435-67003	S14	CITY OF PAWTUCKET
0002	000	1	HARVEY	ST	328	Overhead	Distribution	Luminaire	LUM HPS RWY 70W	Active	70	90435-67003	S14	CITY OF PAWTUCKET
0004	000	1	HARVEY	ST	328	Overhead	Distribution	Luminaire	LUM HPS RWY 70W	Active	70	90435-67003	S14	CITY OF PAWTUCKET
0027	000	1	HASBRO	WAY	142	Overhead	Distribution	Luminaire	LUM HPS RWY 100W	Active	100	90435-67003	S14	CITY OF PAWTUCKET

0029	000	1	HASBRO	WAY	142	Overhead	Distribution	Luminaire	LUM HPS RWY 100W	Active	100	90435-67003	S14	CITY OF PAWTUCKET
0031	000	1	HASBRO	WAY	142	Overhead	Distribution	Luminaire	LUM HPS RWY 100W	Active	100	90435-67003	S14	CITY OF PAWTUCKET
0002	000	1	HASTINGS	AVE	329	Overhead	Distribution	Luminaire	LUM HPS RWY 70W	Active	70	90435-67003	S14	CITY OF PAWTUCKET
0004	000	1	HASTINGS	AVE	329	Overhead	Distribution	Luminaire	LUM HPS RWY 70W	Active	70	90435-67003	S14	CITY OF PAWTUCKET
0006	000	1	HASTINGS	AVE	329	Overhead	Distribution	Luminaire	LUM HPS RWY 70W	Active	70	90435-67003	S14	CITY OF PAWTUCKET
0001	001	1	HATFIELD	ST	330	Overhead	Distribution	Luminaire	LUM HPS RWY 70W	Active	70	90435-67003	S14	CITY OF PAWTUCKET
0003	000	1	HATFIELD	ST	330	Overhead	Distribution	Luminaire	LUM HPS RWY 70W	Active	70	90435-67003	S14	CITY OF PAWTUCKET
0005	000	1	HATFIELD	ST	330	Overhead	Distribution	Luminaire	LUM HPS RWY 70W	Active	70	90435-67003	S14	CITY OF PAWTUCKET
0007	000	1	HATFIELD	ST	330	Overhead	Distribution	Luminaire	LUM HPS RWY 70W	Active	70	90435-67003	S14	CITY OF PAWTUCKET
0008	000	1	HATFIELD	ST	330	Overhead	Distribution	Luminaire	LUM HPS RWY 100W	Active	100	90435-67003	S14	CITY OF PAWTUCKET
0010	000	1	HATFIELD	ST	330	Overhead	Distribution	Luminaire	LUM HPS RWY 70W	Active	70	90435-67003	S14	CITY OF PAWTUCKET
0011	000	1	HATFIELD	ST	330	Overhead	Distribution	Luminaire	LUM HPS RWY 70W	Active	70	90435-67003	S14	CITY OF PAWTUCKET
0012	000	1	HATFIELD	ST	330	Overhead	Distribution	Luminaire	LUM HPS RWY 70W	Active	70	90435-67003	S14	CITY OF PAWTUCKET
0014	000	1	HATFIELD	ST	330	Overhead	Distribution	Luminaire	LUM HPS RWY 70W	Active	70	90435-67003	S14	CITY OF PAWTUCKET
0016	000	1	HATFIELD	ST	330	Overhead	Distribution	Luminaire	LUM HPS RWY 70W	Active	70	90435-67003	S14	CITY OF PAWTUCKET
0017	000	1	HATFIELD	ST	330	Overhead	Distribution	Luminaire	LUM HPS RWY 70W	Active	70	90435-67003	S14	CITY OF PAWTUCKET
0001	000	1	HAWES	ST	331	Overhead	Distribution	Luminaire	LUM HPS RWY 70W	Active	70	90435-67003	S14	CITY OF PAWTUCKET
0003	000	1	HAWES	ST	331	Overhead	Distribution	Luminaire	LUM HPS RWY 70W	Active	70	90435-67003	S14	CITY OF PAWTUCKET
0004	000	1	HAWES	ST	331	Overhead	Distribution	Luminaire	LUM HPS RWY 70W	Active	70	90435-67003	S14	CITY OF PAWTUCKET
0002	000	1	HAWTHORN	ST	332	Overhead	Distribution	Luminaire	LUM HPS RWY 70W	Active	70	90435-67003	S14	CITY OF PAWTUCKET
0003	000	1	HAWTHORN	ST	332	Overhead	Distribution	Luminaire	LUM HPS RWY 70W	Active	70	90435-67003	S14	CITY OF PAWTUCKET
0004	000	1	HAYWARD	ST	333	Overhead	Distribution	Luminaire	LUM HPS RWY 70W	Active	70	90435-67003	S14	CITY OF PAWTUCKET
0006	000	1	HAYWARD	ST	333	Overhead	Distribution	Luminaire	LUM HPS RWY 70W	Active	70	90435-67003	S14	CITY OF PAWTUCKET
0002	000	1	HAZARD	ST	334	Overhead	Distribution	Luminaire	LUM HPS RWY 70W	Active	70	90435-67003	S14	CITY OF PAWTUCKET
0002	000	1	HAZEL	ST	335	Overhead	Distribution	Luminaire	LUM HPS RWY 70W	Active	70	90435-67003	S14	CITY OF PAWTUCKET
0003	000	1	HAZEL	ST	335	Overhead	Distribution	Luminaire	LUM HPS RWY 70W	Active	70	90435-67003	S14	CITY OF PAWTUCKET
0005	000	1	HAZEL	ST	335	Overhead	Distribution	Luminaire	LUM HPS RWY 70W	Active	70	90435-67003	S14	CITY OF PAWTUCKET
0007	000	1	HAZEL	ST	335	Overhead	Distribution	Luminaire	LUM HPS RWY 70W	Active	70	90435-67003	S14	CITY OF PAWTUCKET
0009	000	1	HAZEL	ST	335	Overhead	Distribution	Luminaire	LUM HPS RWY 70W	Active	70	90435-67003	S14	CITY OF PAWTUCKET
0010	000	1	HAZEL	ST	335	Overhead	Distribution	Luminaire	LUM HPS RWY 70W	Active	70	90435-67003	S14	CITY OF PAWTUCKET
0002	000	1	HEATON	ST	336	Overhead	Distribution	Luminaire	LUM HPS RWY 70W	Active	70	90435-67003	S14	CITY OF PAWTUCKET
0004	000	1	HEATON	ST	336	Overhead	Distribution	Luminaire	LUM HPS RWY 70W	Active	70	90435-67003	S14	CITY OF PAWTUCKET
0003	000	1	HICKS	ST	337	Overhead	Distribution	Luminaire	LUM HPS FLD 400W	Active	400	40585-12006	S14	PAWTUCKET SCHOOL DEP
0003	000	2	HICKS	ST	337	Overhead	Distribution	Luminaire	LUM HPS RWY 70W	Active	70	90435-67003	S14	CITY OF PAWTUCKET
0004	000	1	HICKS	ST	337	Overhead	Distribution	Luminaire	LUM HPS FLD 250W	Active	250	40585-12006	S14	PAWTUCKET SCHOOL DEP
0005	000	1	HICKS	ST	337	Overhead	Distribution	Luminaire	LUM HPS RWY 70W	Active	70	90435-67003	S14	CITY OF PAWTUCKET
0006	000	1	HICKS	ST	337	Overhead	Distribution	Luminaire	LUM HPS RWY 70W	Active	70	90435-67003	S14	CITY OF PAWTUCKET
0007	000	1	HICKS	ST	337	Overhead	Distribution	Luminaire	LUM HPS RWY 70W	Active	70	90435-67003	S14	CITY OF PAWTUCKET
0008	000	1	HICKS	ST	337	Overhead	Distribution	Luminaire	LUM HPS RWY 70W	Active	70	90435-67003	S14	CITY OF PAWTUCKET
0001	000	0	HIGH	ST	338	Underground	Streetlighting	Pole	POLE METAL =>25FT	Active	0	90435-67003	S14	CITY OF PAWTUCKET
0001	000	1	HIGH	ST	338	Underground	Streetlighting	Luminaire	LUM HPS RWY 250W	Active	250	90435-67003	S14	CITY OF PAWTUCKET
0002	000	0	HIGH	ST	338	Underground	Streetlighting	Pole	POLE METAL =>25FT	Active	0	90435-67003	S14	CITY OF PAWTUCKET
0002	000	1	HIGH	ST	338	Underground	Streetlighting	Luminaire	LUM HPS RWY 250W	Active	250	90435-67003	S14	CITY OF PAWTUCKET
0003	000	0	HIGH	ST	338	Underground	Streetlighting	Pole	POLE METAL =>25FT	Active	0	90435-67003	S14	CITY OF PAWTUCKET
0003	000	1	HIGH	ST	338	Underground	Streetlighting	Luminaire	LUM HPS RWY 250W	Active	250	90435-67003	S14	CITY OF PAWTUCKET
0004	000	0	HIGH	ST	338	Underground	Streetlighting	Pole	POLE METAL =>25FT	Active	0	90435-67003	S14	CITY OF PAWTUCKET
0004	000	1	HIGH	ST	338	Underground	Streetlighting	Luminaire	LUM HPS RWY 250W	Active	250	90435-67003	S14	CITY OF PAWTUCKET
0004	000	2	HIGH	ST	338	Underground	Streetlighting	Luminaire	LUM HPS FLD 250W	Active	250	90435-67003	S14	CITY OF PAWTUCKET
0005	000	0	HIGH	ST	338	Underground	Streetlighting	Pole	POLE METAL =>25FT	Active	0	90435-67003	S14	CITY OF PAWTUCKET
0005	000	1	HIGH	ST	338	Underground	Streetlighting	Luminaire	LUM HPS RWY 250W	Active	250	90435-67003	S14	CITY OF PAWTUCKET
0005	000	2	HIGH	ST	338	Underground	Streetlighting	Luminaire	LUM HPS FLD 250W	Active	250	90435-67003	S14	CITY OF PAWTUCKET
0006	000	0	HIGH	ST	338	Underground	Streetlighting	Pole	POLE METAL =>25FT	Active	0	90435-67003	S14	CITY OF PAWTUCKET
0006	000	1	HIGH	ST	338	Underground	Streetlighting	Luminaire	LUM HPS RWY 250W	Active	250	90435-67003	S14	CITY OF PAWTUCKET
0007	000	0	HIGH	ST	338	Underground	Streetlighting	Pole	POLE METAL =>25FT	Active	0	90435-67003	S14	CITY OF PAWTUCKET
0007	000	1	HIGH	ST	338	Underground	Streetlighting	Luminaire	LUM HPS RWY 250W	Active	250	90435-67003	S14	CITY OF PAWTUCKET
0008	000	0	HIGH	ST	338	Underground	Streetlighting	Pole	POLE METAL =>25FT	Active	0	90435-67003	S14	CITY OF PAWTUCKET
0008	000	1	HIGH	ST	338	Underground	Streetlighting	Luminaire	LUM HPS RWY 250W	Active	250	90435-67003	S14	CITY OF PAWTUCKET
0009	000	0	HIGH	ST	338	Underground	Streetlighting	Pole	POLE METAL =>25FT	Active	0	90435-67003	S14	CITY OF PAWTUCKET
0009	000	1	HIGH	ST	338	Underground	Streetlighting	Luminaire	LUM HPS RWY 250W	Active	250	90435-67003	S14	CITY OF PAWTUCKET
0010	000	0	HIGH	ST	338	Underground	Streetlighting	Pole	POLE METAL =>25FT	Active	0	90435-67003	S14	CITY OF PAWTUCKET
0010	000	1	HIGH	ST	338	Underground	Streetlighting	Luminaire	LUM HPS RWY 250W	Active	250	90435-67003	S14	CITY OF PAWTUCKET
0012	000	0	HIGH	ST	338	Underground	Streetlighting	Pole	POLE METAL =>25FT	Active	0	90435-67003	S14	CITY OF PAWTUCKET
0012	000	1	HIGH	ST	338	Underground	Streetlighting	Luminaire	LUM HPS RWY 250W	Active	250	90435-67003	S14	CITY OF PAWTUCKET

0015	000	1	HIGH	ST	338	Overhead	Distribution	Luminaire	LUM HPS RWY 100W	Active	100	90435-67003	S14	CITY OF PAWTUCKET
0016	000	1	HIGH	ST	338	Overhead	Distribution	Luminaire	LUM HPS RWY 100W	Active	100	90435-67003	S14	CITY OF PAWTUCKET
0017	000	1	HIGH	ST	338	Overhead	Distribution	Luminaire	LUM HPS RWY 100W	Active	100	90435-67003	S14	CITY OF PAWTUCKET
0018	000	1	HIGH	ST	338	Overhead	Distribution	Luminaire	LUM HPS RWY 70W	Active	70	90435-67003	S14	CITY OF PAWTUCKET
0020	000	1	HIGH	ST	338	Overhead	Distribution	Luminaire	LUM HPS RWY 70W	Active	70	90435-67003	S14	CITY OF PAWTUCKET
0022	000	1	HIGH	ST	338	Overhead	Distribution	Luminaire	LUM HPS RWY 100W	Active	100	90435-67003	S14	CITY OF PAWTUCKET
0024	000	1	HIGH	ST	338	Overhead	Distribution	Luminaire	LUM HPS RWY 100W	Active	100	90435-67003	S14	CITY OF PAWTUCKET
0027	000	1	HIGH	ST	338	Overhead	Distribution	Luminaire	LUM HPS RWY 100W	Active	100	90435-67003	S14	CITY OF PAWTUCKET
0028	000	1	HIGH	ST	338	Overhead	Distribution	Luminaire	LUM HPS RWY 100W	Active	100	90435-67003	S14	CITY OF PAWTUCKET
0029	000	1	HIGH	ST	338	Overhead	Distribution	Luminaire	LUM HPS RWY 100W	Active	100	90435-67003	S14	CITY OF PAWTUCKET
0029	000	3	HIGH	ST	338	Overhead	Distribution	Luminaire	LUM HPS RWY 100W	Active	100	90435-67003	S14	CITY OF PAWTUCKET
0030	001	1	HIGH	ST	338	Overhead	Distribution	Luminaire	LUM HPS RWY 100W	Active	100	90435-67003	S14	CITY OF PAWTUCKET
0031	000	1	HIGH	ST	338	Overhead	Distribution	Luminaire	LUM HPS RWY 100W	Active	100	90435-67003	S14	CITY OF PAWTUCKET
0032	000	0	HIGH	ST	338	Underground	Streetlighting	Pole	POLE METAL =>25FT	Active	0	90435-67003	S14	CITY OF PAWTUCKET
0032	000	1	HIGH	ST	338	Underground	Streetlighting	Luminaire	LUM HPS RWY 100W	Active	100	90435-67003	S14	CITY OF PAWTUCKET
0002	000	1	HIGHLAND	ST	339	Overhead	Distribution	Luminaire	LUM HPS RWY 70W	Active	70	90435-67003	S14	CITY OF PAWTUCKET
0004	000	1	HIGHLAND	ST	339	Overhead	Distribution	Luminaire	LUM HPS RWY 70W	Active	70	90435-67003	S14	CITY OF PAWTUCKET
0006	000	1	HIGHLAND	ST	339	Overhead	Distribution	Luminaire	LUM HPS RWY 70W	Active	70	90435-67003	S14	CITY OF PAWTUCKET
0001	000	0	HILL	ST	340	Underground	Streetlighting	Pole	POLE METAL =>25FT	Active	0	90435-67003	S14	CITY OF PAWTUCKET
0001	000	1	HILL	ST	340	Underground	Streetlighting	Luminaire	LUM HPS RWY 100W	Active	100	90435-67003	S14	CITY OF PAWTUCKET
0002	000	1	HILL	ST	340	Overhead	Distribution	Luminaire	LUM HPS RWY 100W	Active	100	90435-67003	S14	CITY OF PAWTUCKET
0003	000	1	HILL	ST	340	Overhead	Distribution	Luminaire	LUM HPS RWY 100W	Active	100	90435-67003	S14	CITY OF PAWTUCKET
0003	000	2	HILL	ST	340	Overhead	Distribution	Luminaire	LUM HPS RWY 100W	Active	100	90435-67003	S14	CITY OF PAWTUCKET
0001	000	0	HILL ST PARKI	ST	771	Underground	Streetlighting	Pole	POLE METAL =>25FT	Active	0	90435-67003	S14	CITY OF PAWTUCKET
0001	000	1	HILL ST PARKI	ST	771	Underground	Streetlighting	Luminaire	LUM HPS RWY 250W	Active	250	90435-67003	S14	CITY OF PAWTUCKET
0001	000	2	HILL ST PARKI	ST	771	Underground	Streetlighting	Luminaire	LUM HPS RWY 250W	Active	250	90435-67003	S14	CITY OF PAWTUCKET
0002	000	0	HILL ST PARKI	ST	771	Underground	Streetlighting	Pole	POLE METAL =>25FT	Active	0	90435-67003	S14	CITY OF PAWTUCKET
0002	000	1	HILL ST PARKI	ST	771	Underground	Streetlighting	Luminaire	LUM HPS RWY 250W	Active	250	90435-67003	S14	CITY OF PAWTUCKET
0002	000	2	HILL ST PARKI	ST	771	Underground	Streetlighting	Luminaire	LUM HPS RWY 250W	Active	250	90435-67003	S14	CITY OF PAWTUCKET
0003	000	0	HILL ST PARKI	ST	771	Underground	Streetlighting	Pole	POLE METAL =>25FT	Active	0	90435-67003	S14	CITY OF PAWTUCKET
0003	000	1	HILL ST PARKI	ST	771	Underground	Streetlighting	Luminaire	LUM HPS RWY 250W	Active	250	90435-67003	S14	CITY OF PAWTUCKET
0003	000	2	HILL ST PARKI	ST	771	Underground	Streetlighting	Luminaire	LUM HPS RWY 250W	Active	250	90435-67003	S14	CITY OF PAWTUCKET
0004	000	0	HILL ST PARKI	ST	771	Underground	Streetlighting	Pole	POLE METAL =>25FT	Active	0	90435-67003	S14	CITY OF PAWTUCKET
0004	000	1	HILL ST PARKI	ST	771	Underground	Streetlighting	Luminaire	LUM HPS RWY 250W	Active	250	90435-67003	S14	CITY OF PAWTUCKET
0004	000	2	HILL ST PARKI	ST	771	Underground	Streetlighting	Luminaire	LUM HPS RWY 250W	Active	250	90435-67003	S14	CITY OF PAWTUCKET
0005	000	1	HILL ST PARKI	ST	771	Overhead	Distribution	Luminaire	LUM HPS RWY 250W	Active	250	90435-67003	S14	CITY OF PAWTUCKET
0001	000	1	HILLCREST	AVE	341	Overhead	Distribution	Luminaire	LUM HPS RWY 70W	Active	70	90435-67003	S14	CITY OF PAWTUCKET
0003	000	1	HILLCREST	AVE	341	Overhead	Distribution	Luminaire	LUM HPS RWY 70W	Active	70	90435-67003	S14	CITY OF PAWTUCKET
0005	000	1	HILLCREST	AVE	341	Overhead	Distribution	Luminaire	LUM HPS RWY 70W	Active	70	90435-67003	S14	CITY OF PAWTUCKET
0007	000	1	HILLCREST	AVE	341	Overhead	Distribution	Luminaire	LUM HPS RWY 70W	Active	70	90435-67003	S14	CITY OF PAWTUCKET
0001	000	1	HILLSIDE	AVE	342	Overhead	Distribution	Luminaire	LUM HPS RWY 70W	Active	70	90435-67003	S14	CITY OF PAWTUCKET
0002	000	1	HILLSIDE	AVE	342	Overhead	Distribution	Luminaire	LUM HPS RWY 70W	Active	70	90435-67003	S14	CITY OF PAWTUCKET
0003	000	1	HILLSIDE	AVE	342	Overhead	Distribution	Luminaire	LUM HPS RWY 70W	Active	70	90435-67003	S14	CITY OF PAWTUCKET
0004	000	1	HILLSIDE	AVE	342	Overhead	Distribution	Luminaire	LUM HPS RWY 70W	Active	70	90435-67003	S14	CITY OF PAWTUCKET
0005	000	1	HILLSIDE	AVE	342	Overhead	Distribution	Luminaire	LUM HPS RWY 70W	Active	70	90435-67003	S14	CITY OF PAWTUCKET
0006	000	1	HILLSIDE	AVE	342	Overhead	Distribution	Luminaire	LUM HPS RWY 70W	Active	70	90435-67003	S14	CITY OF PAWTUCKET
0009	000	1	HILLSIDE	AVE	342	Overhead	Distribution	Luminaire	LUM HPS RWY 70W	Active	70	90435-67003	S14	CITY OF PAWTUCKET
0011	000	1	HILLSIDE	AVE	342	Overhead	Distribution	Luminaire	LUM HPS RWY 70W	Active	70	90435-67003	S14	CITY OF PAWTUCKET
0012	000	1	HILLSIDE	AVE	342	Overhead	Distribution	Luminaire	LUM HPS RWY 70W	Active	70	90435-67003	S14	CITY OF PAWTUCKET
0014	000	1	HILLSIDE	AVE	342	Overhead	Distribution	Luminaire	LUM HPS RWY 70W	Active	70	90435-67003	S14	CITY OF PAWTUCKET
0001	000	1	HILTON	ST	343	Overhead	Distribution	Luminaire	LUM HPS RWY 70W	Active	70	90435-67003	S14	CITY OF PAWTUCKET
0002	000	1	HILTON	ST	343	Overhead	Distribution	Luminaire	LUM HPS RWY 70W	Active	70	90435-67003	S14	CITY OF PAWTUCKET
0003	000	1	HILTON	ST	343	Overhead	Distribution	Luminaire	LUM HPS RWY 70W	Active	70	90435-67003	S14	CITY OF PAWTUCKET
0004	000	1	HILTON	ST	343	Overhead	Distribution	Luminaire	LUM HPS RWY 70W	Active	70	90435-67003	S14	CITY OF PAWTUCKET
0006	000	1	HILTON	ST	343	Overhead	Distribution	Luminaire	LUM HPS RWY 70W	Active	70	90435-67003	S14	CITY OF PAWTUCKET
0001	000	1	HOBSON	AVE	344	Overhead	Distribution	Luminaire	LUM HPS RWY 70W	Active	70	90435-67003	S14	CITY OF PAWTUCKET
0003	000	1	HOBSON	AVE	344	Overhead	Distribution	Luminaire	LUM HPS RWY 70W	Active	70	90435-67003	S14	CITY OF PAWTUCKET
0005	000	1	HOBSON	AVE	344	Overhead	Distribution	Luminaire	LUM HPS RWY 70W	Active	70	90435-67003	S14	CITY OF PAWTUCKET
0006	000	1	HOBSON	AVE	344	Overhead	Distribution	Luminaire	LUM HPS RWY 70W	Active	70	90435-67003	S14	CITY OF PAWTUCKET
0007	000	1	HOBSON	AVE	344	Overhead	Distribution	Luminaire	LUM HPS RWY 70W	Active	70	90435-67003	S14	CITY OF PAWTUCKET
0001	000	1	HOLLAND	AVE	345	Overhead	Distribution	Luminaire	LUM HPS RWY 70W	Active	70	90435-67003	S14	CITY OF PAWTUCKET
0002	000	1	HOLLAND	AVE	345	Overhead	Distribution	Luminaire	LUM HPS RWY 70W	Active	70	90435-67003	S14	CITY OF PAWTUCKET
0003	000	1	HOLLAND	AVE	345	Overhead	Distribution	Luminaire	LUM HPS RWY 70W	Active	70	90435-67003	S14	CITY OF PAWTUCKET

0002	000	1	HOME	ST	346	Overhead	Distribution	Luminaire	LUM HPS RWY 70W	Active	70	90435-67003	S14	CITY OF PAWTUCKET
0004	000	1	HOME	ST	346	Overhead	Distribution	Luminaire	LUM HPS RWY 70W	Active	70	90435-67003	S14	CITY OF PAWTUCKET
0002	000	1	HOMESTEAD	ST	347	Overhead	Distribution	Luminaire	LUM HPS RWY 100W	Active	100	90435-67003	S14	CITY OF PAWTUCKET
0001	000	1	HOPE	ST	348	Overhead	Distribution	Luminaire	LUM HPS RWY 70W	Active	70	90435-67003	S14	CITY OF PAWTUCKET
0003	000	1	HOPE	ST	348	Overhead	Distribution	Luminaire	LUM HPS RWY 70W	Active	70	90435-67003	S14	CITY OF PAWTUCKET
0003	084	1	HOPE	ST	348	Overhead	Distribution	Luminaire	LUM HPS FLD 250W	Active	250	90435-67003	S14	CITY OF PAWTUCKET
0005	000	1	HOPE	ST	348	Overhead	Distribution	Luminaire	LUM HPS RWY 70W	Active	70	90435-67003	S14	CITY OF PAWTUCKET
0007	000	1	HOPE	ST	348	Overhead	Distribution	Luminaire	LUM HPS RWY 70W	Active	70	90435-67003	S14	CITY OF PAWTUCKET
0008	000	1	HOPE	ST	348	Overhead	Distribution	Luminaire	LUM HPS RWY 70W	Active	70	90435-67003	S14	CITY OF PAWTUCKET
0009	000	1	HOPE	ST	348	Overhead	Distribution	Luminaire	LUM HPS RWY 70W	Active	70	90435-67003	S14	CITY OF PAWTUCKET
0010	000	1	HOPE	ST	348	Overhead	Distribution	Luminaire	LUM HPS RWY 70W	Active	70	90435-67003	S14	CITY OF PAWTUCKET
0011	000	1	HOPE	ST	348	Overhead	Distribution	Luminaire	LUM HPS RWY 70W	Active	70	90435-67003	S14	CITY OF PAWTUCKET
0002	000	1	HOWARD	AVE	349	Overhead	Distribution	Luminaire	LUM HPS RWY 70W	Active	70	90435-67003	S14	CITY OF PAWTUCKET
0003	000	1	HOWARD	AVE	349	Overhead	Distribution	Luminaire	LUM HPS RWY 70W	Active	70	90435-67003	S14	CITY OF PAWTUCKET
0002	000	1	HUDSON	ST	350	Overhead	Distribution	Luminaire	LUM HPS RWY 70W	Active	70	90435-67003	S14	CITY OF PAWTUCKET
0003	000	1	HUGHES	AVE	351	Overhead	Distribution	Luminaire	LUM HPS RWY 70W	Active	70	90435-67003	S14	CITY OF PAWTUCKET
0006	000	1	HUGHES	AVE	351	Overhead	Distribution	Luminaire	LUM HPS RWY 70W	Active	70	90435-67003	S14	CITY OF PAWTUCKET
0007	000	1	HUGHES	AVE	351	Overhead	Distribution	Luminaire	LUM HPS RWY 70W	Active	70	90435-67003	S14	CITY OF PAWTUCKET
0008	000	1	HUGHES	AVE	351	Overhead	Distribution	Luminaire	LUM HPS RWY 70W	Active	70	90435-67003	S14	CITY OF PAWTUCKET
0010	000	1	HUGHES	AVE	351	Overhead	Distribution	Luminaire	LUM HPS RWY 100W	Active	100	90435-67003	S14	CITY OF PAWTUCKET
0012	000	1	HUGHES	AVE	351	Overhead	Distribution	Luminaire	LUM HPS RWY 70W	Active	70	90435-67003	S14	CITY OF PAWTUCKET
0015	000	1	HUGHES	AVE	351	Overhead	Distribution	Luminaire	LUM HPS RWY 70W	Active	70	90435-67003	S14	CITY OF PAWTUCKET
0017	000	1	HUGHES	AVE	351	Overhead	Distribution	Luminaire	LUM HPS RWY 70W	Active	70	90435-67003	S14	CITY OF PAWTUCKET
0019	000	1	HUGHES	AVE	351	Overhead	Distribution	Luminaire	LUM HPS RWY 70W	Active	70	90435-67003	S14	CITY OF PAWTUCKET
0020	000	1	HUGHES	AVE	351	Overhead	Distribution	Luminaire	LUM HPS RWY 70W	Active	70	90435-67003	S14	CITY OF PAWTUCKET
0022	000	1	HUGHES	AVE	351	Overhead	Distribution	Luminaire	LUM HPS RWY 70W	Active	70	90435-67003	S14	CITY OF PAWTUCKET
0024	000	1	HUGHES	AVE	351	Overhead	Distribution	Luminaire	LUM HPS RWY 100W	Active	100	90435-67003	S14	CITY OF PAWTUCKET
0026	000	1	HUGHES	AVE	351	Overhead	Distribution	Luminaire	LUM HPS RWY 70W	Active	70	90435-67003	S14	CITY OF PAWTUCKET
0004	000	1	HUMBOLDT	AVE	352	Overhead	Distribution	Luminaire	LUM HPS RWY 70W	Active	70	90435-67003	S14	CITY OF PAWTUCKET
0005	000	1	HUMBOLDT	AVE	352	Overhead	Distribution	Luminaire	LUM HPS RWY 70W	Active	70	90435-67003	S14	CITY OF PAWTUCKET
0006	000	1	HUMBOLDT	AVE	352	Overhead	Distribution	Luminaire	LUM HPS RWY 70W	Active	70	90435-67003	S14	CITY OF PAWTUCKET
0008	000	1	HUMBOLDT	AVE	352	Overhead	Distribution	Luminaire	LUM HPS RWY 70W	Active	70	90435-67003	S14	CITY OF PAWTUCKET
0010	000	1	HUMBOLDT	AVE	352	Overhead	Distribution	Luminaire	LUM HPS RWY 70W	Active	70	90435-67003	S14	CITY OF PAWTUCKET
0002	030	0	HUMES	ST	353	Underground	Streetlighting	Pole	POLE METAL =>25FT	Active	0	90435-67003	S14	CITY OF PAWTUCKET
0002	030	1	HUMES	ST	353	Underground	Streetlighting	Luminaire	LUM HPS RWY 100W	Active	100	90435-67003	S14	CITY OF PAWTUCKET
0002	030	2	HUMES	ST	353	Underground	Streetlighting	Luminaire	LUM HPS RWY 100W	Active	100	90435-67003	S14	CITY OF PAWTUCKET
0002	031	0	HUMES	ST	353	Underground	Streetlighting	Pole	POLE METAL =>25FT	Active	0	90435-67003	S14	CITY OF PAWTUCKET
0002	031	1	HUMES	ST	353	Underground	Streetlighting	Luminaire	LUM HPS RWY 100W	Active	100	90435-67003	S14	CITY OF PAWTUCKET
0002	031	2	HUMES	ST	353	Underground	Streetlighting	Luminaire	LUM HPS RWY 100W	Active	100	90435-67003	S14	CITY OF PAWTUCKET
0003	000	1	HUMES	ST	353	Overhead	Distribution	Luminaire	LUM HPS RWY 70W	Active	70	90435-67003	S14	CITY OF PAWTUCKET
0001	000	1	HUNTS	AVE	354	Overhead	Distribution	Luminaire	LUM HPS RWY 70W	Active	70	90435-67003	S14	CITY OF PAWTUCKET
0007	000	1	HUNTS	AVE	354	Overhead	Distribution	Luminaire	LUM HPS RWY 70W	Active	70	90435-67003	S14	CITY OF PAWTUCKET
0009	000	1	HUNTS	AVE	354	Overhead	Distribution	Luminaire	LUM HPS RWY 70W	Active	70	90435-67003	S14	CITY OF PAWTUCKET
0011	000	1	HUNTS	AVE	354	Overhead	Distribution	Luminaire	LUM HPS RWY 70W	Active	70	90435-67003	S14	CITY OF PAWTUCKET
0012	000	1	HUNTS	AVE	354	Overhead	Distribution	Luminaire	LUM HPS RWY 70W	Active	70	90435-67003	S14	CITY OF PAWTUCKET
0013	000	1	HUNTS	AVE	354	Overhead	Distribution	Luminaire	LUM HPS RWY 100W	Active	100	90435-67003	S14	CITY OF PAWTUCKET
0015	000	1	HUNTS	AVE	354	Overhead	Distribution	Luminaire	LUM HPS RWY 70W	Active	70	90435-67003	S14	CITY OF PAWTUCKET
0017	000	1	HUNTS	AVE	354	Overhead	Distribution	Luminaire	LUM HPS RWY 70W	Active	70	90435-67003	S14	CITY OF PAWTUCKET
0020	000	1	HUNTS	AVE	354	Overhead	Distribution	Luminaire	LUM HPS RWY 70W	Active	70	90435-67003	S14	CITY OF PAWTUCKET
0022	000	1	HUNTS	AVE	354	Overhead	Distribution	Luminaire	LUM HPS RWY 70W	Active	70	90435-67003	S14	CITY OF PAWTUCKET
0024	000	1	HUNTS	AVE	354	Overhead	Distribution	Luminaire	LUM HPS RWY 70W	Active	70	90435-67003	S14	CITY OF PAWTUCKET
0025	000	1	HUNTS	AVE	354	Overhead	Distribution	Luminaire	LUM HPS RWY 70W	Active	70	90435-67003	S14	CITY OF PAWTUCKET
0026	000	1	HUNTS	AVE	354	Overhead	Distribution	Luminaire	LUM HPS RWY 70W	Active	70	90435-67003	S14	CITY OF PAWTUCKET
0028	000	1	HUNTS	AVE	354	Overhead	Distribution	Luminaire	LUM HPS RWY 70W	Active	70	90435-67003	S14	CITY OF PAWTUCKET
0030	000	1	HUNTS	AVE	354	Overhead	Distribution	Luminaire	LUM HPS RWY 70W	Active	70	90435-67003	S14	CITY OF PAWTUCKET
0032	000	1	HUNTS	AVE	354	Overhead	Distribution	Luminaire	LUM HPS RWY 70W	Active	70	90435-67003	S14	CITY OF PAWTUCKET
0001	000	1	HURLEY	AVE	355	Overhead	Distribution	Luminaire	LUM HPS RWY 70W	Active	70	90435-67003	S14	CITY OF PAWTUCKET
0003	000	1	HURLEY	AVE	355	Overhead	Distribution	Luminaire	LUM HPS RWY 70W	Active	70	90435-67003	S14	CITY OF PAWTUCKET
0006	000	1	HURLEY	AVE	355	Overhead	Distribution	Luminaire	LUM HPS RWY 70W	Active	70	90435-67003	S14	CITY OF PAWTUCKET
0009	000	1	HURLEY	AVE	355	Overhead	Distribution	Luminaire	LUM HPS RWY 70W	Active	70	90435-67003	S14	CITY OF PAWTUCKET
0010	000	1	HURLEY	AVE	355	Overhead	Distribution	Luminaire	LUM HPS RWY 70W	Active	70	90435-67003	S14	CITY OF PAWTUCKET
0011	000	1	HURLEY	AVE	355	Overhead	Distribution	Luminaire	LUM HPS RWY 70W	Active	70	90435-67003	S14	CITY OF PAWTUCKET
0014	000	1	HURLEY	AVE	355	Overhead	Distribution	Luminaire	LUM HPS RWY 70W	Active	70	90435-67003	S14	CITY OF PAWTUCKET

0001	000	1	HUTCHINSON	AVE	356	Overhead	Distribution	Luminaire	LUM HPS RWY 70W	Active	70	90435-67003	S14	CITY OF PAWTUCKET
0003	000	1	HUTCHINSON	AVE	356	Overhead	Distribution	Luminaire	LUM HPS RWY 70W	Active	70	90435-67003	S14	CITY OF PAWTUCKET
0005	000	1	HUTCHINSON	AVE	356	Overhead	Distribution	Luminaire	LUM HPS RWY 70W	Active	70	90435-67003	S14	CITY OF PAWTUCKET
0001	000	1	HYDE	AVE	357	Overhead	Distribution	Luminaire	LUM HPS RWY 70W	Active	70	90435-67003	S14	CITY OF PAWTUCKET
0003	000	1	HYDE	AVE	357	Overhead	Distribution	Luminaire	LUM HPS RWY 70W	Active	70	90435-67003	S14	CITY OF PAWTUCKET
0004	000	1	HYDE	AVE	357	Overhead	Distribution	Luminaire	LUM HPS RWY 70W	Active	70	90435-67003	S14	CITY OF PAWTUCKET
0006	000	1	HYDE	AVE	357	Overhead	Distribution	Luminaire	LUM HPS RWY 70W	Active	70	90435-67003	S14	CITY OF PAWTUCKET
0008	000	1	HYDE	AVE	357	Overhead	Distribution	Luminaire	LUM HPS RWY 70W	Active	70	90435-67003	S14	CITY OF PAWTUCKET
0010	000	1	HYDE	AVE	357	Overhead	Distribution	Luminaire	LUM HPS RWY 70W	Active	70	90435-67003	S14	CITY OF PAWTUCKET
0012	000	1	HYDE	AVE	357	Overhead	Distribution	Luminaire	LUM HPS RWY 70W	Active	70	90435-67003	S14	CITY OF PAWTUCKET
0002	000	1	INDIA	ST	358	Overhead	Distribution	Luminaire	LUM HPS RWY 70W	Active	70	90435-67003	S14	CITY OF PAWTUCKET
0004	000	1	INDIA	ST	358	Overhead	Distribution	Luminaire	LUM HPS RWY 70W	Active	70	90435-67003	S14	CITY OF PAWTUCKET
0008	000	1	INDIA	ST	358	Overhead	Distribution	Luminaire	LUM HPS RWY 70W	Active	70	90435-67003	S14	CITY OF PAWTUCKET
0009	000	1	INDIA	ST	358	Overhead	Distribution	Luminaire	LUM HPS RWY 70W	Active	70	90435-67003	S14	CITY OF PAWTUCKET
0001	000	1	IRVING	CT	359	Overhead	Distribution	Luminaire	LUM HPS RWY 70W	Active	70	90435-67003	S14	CITY OF PAWTUCKET
0002	000	1	IVY	ST	360	Overhead	Distribution	Luminaire	LUM HPS RWY 70W	Active	70	90435-67003	S14	CITY OF PAWTUCKET
0004	000	1	IVY	ST	360	Overhead	Distribution	Luminaire	LUM HPS RWY 70W	Active	70	90435-67003	S14	CITY OF PAWTUCKET
0003	000	1	JACKSON	ST	361	Overhead	Distribution	Luminaire	LUM HPS RWY 70W	Active	70	90435-67003	S14	CITY OF PAWTUCKET
0004	000	1	JACKSON	ST	361	Overhead	Distribution	Luminaire	LUM HPS RWY 70W	Active	70	90435-67003	S14	CITY OF PAWTUCKET
0006	000	1	JACKSON	ST	361	Overhead	Distribution	Luminaire	LUM HPS RWY 100W	Active	100	90435-67003	S14	CITY OF PAWTUCKET
0007	000	1	JACKSON	ST	361	Overhead	Distribution	Luminaire	LUM HPS RWY 70W	Active	70	90435-67003	S14	CITY OF PAWTUCKET
0008	000	1	JACKSON	ST	361	Overhead	Distribution	Luminaire	LUM HPS RWY 70W	Active	70	90435-67003	S14	CITY OF PAWTUCKET
0001	000	1	JAMES	ST	362	Overhead	Distribution	Luminaire	LUM HPS RWY 70W	Active	70	90435-67003	S14	CITY OF PAWTUCKET
0002	000	1	JAMES	ST	362	Overhead	Distribution	Luminaire	LUM HPS RWY 70W	Active	70	90435-67003	S14	CITY OF PAWTUCKET
0001	000	1	JANE	ST	363	Overhead	Distribution	Luminaire	LUM HPS RWY 70W	Active	70	90435-67003	S14	CITY OF PAWTUCKET
0001	002	1	JANE	ST	363	Overhead	Distribution	Luminaire	LUM HPS RWY 70W	Active	70	90435-67003	S14	CITY OF PAWTUCKET
0003	000	1	JANE	ST	363	Overhead	Distribution	Luminaire	LUM HPS RWY 70W	Active	70	90435-67003	S14	CITY OF PAWTUCKET
0005	000	1	JANE	ST	363	Overhead	Distribution	Luminaire	LUM HPS RWY 70W	Active	70	90435-67003	S14	CITY OF PAWTUCKET
0001	000	1	JAPONICA	ST	364	Overhead	Distribution	Luminaire	LUM HPS RWY 70W	Active	70	90435-67003	S14	CITY OF PAWTUCKET
0003	000	1	JAPONICA	ST	364	Overhead	Distribution	Luminaire	LUM HPS RWY 70W	Active	70	90435-67003	S14	CITY OF PAWTUCKET
0004	000	1	JAPONICA	ST	364	Overhead	Distribution	Luminaire	LUM HPS RWY 70W	Active	70	90435-67003	S14	CITY OF PAWTUCKET
0006	000	1	JAPONICA	ST	364	Overhead	Distribution	Luminaire	LUM HPS RWY 70W	Active	70	90435-67003	S14	CITY OF PAWTUCKET
0011	000	1	JAPONICA	ST	364	Overhead	Distribution	Luminaire	LUM HPS RWY 70W	Active	70	90435-67003	S14	CITY OF PAWTUCKET
0012	000	1	JAPONICA	ST	364	Overhead	Distribution	Luminaire	LUM HPS RWY 70W	Active	70	90435-67003	S14	CITY OF PAWTUCKET
0013	000	1	JAPONICA	ST	364	Overhead	Distribution	Luminaire	LUM HPS RWY 70W	Active	70	90435-67003	S14	CITY OF PAWTUCKET
0014	000	1	JAPONICA	ST	364	Overhead	Distribution	Luminaire	LUM HPS RWY 70W	Active	70	90435-67003	S14	CITY OF PAWTUCKET
0015	000	1	JAPONICA	ST	364	Overhead	Distribution	Luminaire	LUM HPS RWY 70W	Active	70	90435-67003	S14	CITY OF PAWTUCKET
0016	000	1	JAPONICA	ST	364	Overhead	Distribution	Luminaire	LUM HPS RWY 70W	Active	70	90435-67003	S14	CITY OF PAWTUCKET
0018	000	1	JAPONICA	ST	364	Overhead	Distribution	Luminaire	LUM HPS RWY 70W	Active	70	90435-67003	S14	CITY OF PAWTUCKET
0018	001	1	JAPONICA	ST	364	Overhead	Distribution	Luminaire	LUM HPS RWY 70W	Active	70	90435-67003	S14	CITY OF PAWTUCKET
0019	000	1	JAPONICA	ST	364	Overhead	Distribution	Luminaire	LUM HPS RWY 70W	Active	70	90435-67003	S14	CITY OF PAWTUCKET
0023	000	1	JAPONICA	ST	364	Overhead	Distribution	Luminaire	LUM HPS RWY 70W	Active	70	90435-67003	S14	CITY OF PAWTUCKET
0024	000	1	JAPONICA	ST	364	Overhead	Distribution	Luminaire	LUM HPS RWY 70W	Active	70	90435-67003	S14	CITY OF PAWTUCKET
0025	000	1	JAPONICA	ST	364	Overhead	Distribution	Luminaire	LUM HPS RWY 70W	Active	70	90435-67003	S14	CITY OF PAWTUCKET
0027	000	1	JAPONICA	ST	364	Overhead	Distribution	Luminaire	LUM HPS RWY 70W	Active	70	90435-67003	S14	CITY OF PAWTUCKET
0029	000	1	JAPONICA	ST	364	Overhead	Distribution	Luminaire	LUM HPS RWY 70W	Active	70	90435-67003	S14	CITY OF PAWTUCKET
0031	000	1	JAPONICA	ST	364	Overhead	Distribution	Luminaire	LUM HPS RWY 70W	Active	70	90435-67003	S14	CITY OF PAWTUCKET
0002	000	1	JEFFERS	ST	365	Overhead	Distribution	Luminaire	LUM HPS RWY 70W	Active	70	90435-67003	S14	CITY OF PAWTUCKET
0004	000	1	JEFFERS	ST	365	Overhead	Distribution	Luminaire	LUM HPS RWY 70W	Active	70	90435-67003	S14	CITY OF PAWTUCKET
0002	000	1	JEFFERSON	AVE	366	Overhead	Distribution	Luminaire	LUM HPS RWY 70W	Active	70	90435-67003	S14	CITY OF PAWTUCKET
0003	000	1	JEFFERSON	AVE	366	Overhead	Distribution	Luminaire	LUM HPS RWY 100W	Active	100	90435-67003	S14	CITY OF PAWTUCKET
0005	000	1	JEFFERSON	AVE	366	Overhead	Distribution	Luminaire	LUM HPS FLD 250W	Active	250	90435-67003	S14	CITY OF PAWTUCKET
0009	000	1	JEFFERSON	AVE	366	Overhead	Distribution	Luminaire	LUM HPS RWY 70W	Active	70	90435-67003	S14	CITY OF PAWTUCKET
0009	000	2	JEFFERSON	AVE	366	Overhead	Distribution	Luminaire	LUM HPS FLD 400W	Active	400	90435-67003	S14	CITY OF PAWTUCKET
0010	000	1	JEFFERSON	AVE	366	Overhead	Distribution	Luminaire	LUM HPS RWY 70W	Active	70	90435-67003	S14	CITY OF PAWTUCKET
0011	000	1	JEFFERSON	AVE	366	Overhead	Distribution	Luminaire	LUM HPS RWY 70W	Active	70	90435-67003	S14	CITY OF PAWTUCKET
0001	000	0	JENKS	WAY	367	Underground	Streetlighting	Pole	POLE METAL =>25FT	Active	0	90435-67003	S14	CITY OF PAWTUCKET
0001	000	1	JENKS	WAY	367	Underground	Streetlighting	Luminaire	LUM HPS RWY 100W	Active	100	90435-67003	S14	CITY OF PAWTUCKET
0003	000	0	JENKS	WAY	367	Underground	Streetlighting	Pole	POLE METAL =>25FT	Active	0	90435-67003	S14	CITY OF PAWTUCKET
0003	000	1	JENKS	WAY	367	Underground	Streetlighting	Luminaire	LUM HPS RWY 100W-TW	Active	100	90435-67003	S14	CITY OF PAWTUCKET
0003	000	2	JENKS	WAY	367	Underground	Streetlighting	Luminaire	LUM HPS RWY 100W	Active	100	90435-67003	S14	CITY OF PAWTUCKET
0001	000	1	JOAN	DR	368	Overhead	Distribution	Luminaire	LUM HPS RWY 70W	Active	70	90435-67003	S14	CITY OF PAWTUCKET
0001	000	1	JOHN	ST	369	Overhead	Distribution	Luminaire	LUM HPS RWY 70W	Active	70	90435-67003	S14	CITY OF PAWTUCKET

0003	000	1	JOHN	ST	369	Overhead	Distribution	Luminaire	LUM HPS RWY 100W	Active	100	90435-67003	S14	CITY OF PAWTUCKET
0004	000	1	JOHN	ST	369	Overhead	Distribution	Luminaire	LUM HPS RWY 100W	Active	100	90435-67003	S14	CITY OF PAWTUCKET
0004	000	2	JOHN	ST	369	Overhead	Distribution	Luminaire	LUM HPS FLD 400W	Active	400	3371-64002	S14	CITY OF PAWTUCKET
0004	030	0	JOHN	ST	369	Overhead	Streetlighting	Pole	POLE - WOOD	Active	0	3371-64002	S14	CITY OF PAWTUCKET
0004	030	1	JOHN	ST	369	Overhead	Streetlighting	Luminaire	LUM HPS FLD 400W	Active	400	3371-64002	S14	CITY OF PAWTUCKET
0005	000	1	JOHN	ST	369	Overhead	Distribution	Luminaire	LUM HPS RWY 70W	Active	70	90435-67003	S14	CITY OF PAWTUCKET
0005	000	2	JOHN	ST	369	Overhead	Distribution	Luminaire	LUM HPS FLD 400W	Active	400	3371-64002	S14	CITY OF PAWTUCKET
0005	000	3	JOHN	ST	369	Overhead	Distribution	Luminaire	LUM HPS FLD 400W	Active	400	3371-64002	S14	CITY OF PAWTUCKET
0005	030	0	JOHN	ST	369	Overhead	Streetlighting	Pole	POLE - WOOD	Active	0	3371-64002	S14	CITY OF PAWTUCKET
0005	030	1	JOHN	ST	369	Overhead	Streetlighting	Luminaire	LUM HPS FLD 400W	Active	400	3371-64002	S14	CITY OF PAWTUCKET
0006	000	1	JOHN	ST	369	Overhead	Distribution	Luminaire	LUM HPS RWY 70W	Active	70	90435-67003	S14	CITY OF PAWTUCKET
0007	000	1	JOHN	ST	369	Overhead	Distribution	Luminaire	LUM HPS RWY 70W	Active	70	90435-67003	S14	CITY OF PAWTUCKET
0008	000	1	JOHN	ST	369	Overhead	Distribution	Luminaire	LUM HPS RWY 70W	Active	70	90435-67003	S14	CITY OF PAWTUCKET
0010	000	1	JOHN	ST	369	Overhead	Distribution	Luminaire	LUM HPS RWY 70W	Active	70	90435-67003	S14	CITY OF PAWTUCKET
0013	000	1	JOHN	ST	369	Overhead	Distribution	Luminaire	LUM HPS RWY 70W	Active	70	90435-67003	S14	CITY OF PAWTUCKET
0014	000	1	JOHN	ST	369	Overhead	Distribution	Luminaire	LUM HPS RWY 70W	Active	70	90435-67003	S14	CITY OF PAWTUCKET
0015	000	1	JOHN	ST	369	Overhead	Distribution	Luminaire	LUM HPS RWY 70W	Active	70	90435-67003	S14	CITY OF PAWTUCKET
0017	000	1	JOHN	ST	369	Overhead	Distribution	Luminaire	LUM HPS RWY 70W	Active	70	90435-67003	S14	CITY OF PAWTUCKET
0019	000	1	JOHN	ST	369	Overhead	Distribution	Luminaire	LUM HPS RWY 70W	Active	70	90435-67003	S14	CITY OF PAWTUCKET
0002	000	1	JOHNSON	ST	370	Overhead	Distribution	Luminaire	LUM HPS RWY 70W	Active	70	90435-67003	S14	CITY OF PAWTUCKET
0005	000	1	JOHNSON	ST	370	Overhead	Distribution	Luminaire	LUM HPS RWY 70W	Active	70	90435-67003	S14	CITY OF PAWTUCKET
0006	000	1	JOHNSON	ST	370	Overhead	Distribution	Luminaire	LUM HPS RWY 70W	Active	70	90435-67003	S14	CITY OF PAWTUCKET
0008	000	1	JOHNSON	ST	370	Overhead	Distribution	Luminaire	LUM HPS RWY 70W	Active	70	90435-67003	S14	CITY OF PAWTUCKET
0008	030	1	JOHNSON	ST	370	Overhead	Distribution	Luminaire	LUM HPS FLD 250W	Active	250	3371-64002	S14	CITY OF PAWTUCKET
0009	000	1	JOHNSON	ST	370	Overhead	Distribution	Luminaire	LUM HPS RWY 250W	Active	250	90435-67003	S14	CITY OF PAWTUCKET
0010	000	1	JOHNSON	ST	370	Overhead	Distribution	Luminaire	LUM HPS RWY 50W	Active	50	90435-67003	S14	CITY OF PAWTUCKET
0014	000	1	JOHNSON	ST	370	Overhead	Distribution	Luminaire	LUM HPS RWY 70W	Active	70	90435-67003	S14	CITY OF PAWTUCKET
0015	000	1	JOHNSON	ST	370	Overhead	Distribution	Luminaire	LUM HPS RWY 70W	Active	70	90435-67003	S14	CITY OF PAWTUCKET
0002	000	1	JONES	AVE	371	Overhead	Distribution	Luminaire	LUM HPS RWY 70W	Active	70	90435-67003	S14	CITY OF PAWTUCKET
0004	000	1	JONES	AVE	371	Overhead	Distribution	Luminaire	LUM HPS RWY 70W	Active	70	90435-67003	S14	CITY OF PAWTUCKET
0004	000	1	JULIAN	ST	372	Overhead	Distribution	Luminaire	LUM HPS RWY 70W	Active	70	90435-67003	S14	CITY OF PAWTUCKET
0006	000	1	JULIAN	ST	372	Overhead	Distribution	Luminaire	LUM HPS RWY 70W	Active	70	90435-67003	S14	CITY OF PAWTUCKET
0012	000	1	JULIAN	ST	372	Overhead	Distribution	Luminaire	LUM HPS RWY 70W	Active	70	90435-67003	S14	CITY OF PAWTUCKET
0002	000	1	JUTRAS	AVE	373	Overhead	Distribution	Luminaire	LUM HPS RWY 70W	Active	70	90435-67003	S14	CITY OF PAWTUCKET
0004	000	1	JUTRAS	AVE	373	Overhead	Distribution	Luminaire	LUM HPS RWY 70W	Active	70	90435-67003	S14	CITY OF PAWTUCKET
0002	000	1	KATAMA	RD	375	Overhead	Distribution	Luminaire	LUM HPS RWY 70W	Active	70	90435-67003	S14	CITY OF PAWTUCKET
0004	000	1	KATAMA	RD	375	Overhead	Distribution	Luminaire	LUM HPS RWY 70W	Active	70	90435-67003	S14	CITY OF PAWTUCKET
0006	000	1	KATAMA	RD	375	Overhead	Distribution	Luminaire	LUM HPS RWY 70W	Active	70	90435-67003	S14	CITY OF PAWTUCKET
0001	000	1	KELTON	ST	376	Overhead	Distribution	Luminaire	LUM HPS RWY 70W	Active	70	90435-67003	S14	CITY OF PAWTUCKET
0003	000	1	KELTON	ST	376	Overhead	Distribution	Luminaire	LUM HPS RWY 70W	Active	70	90435-67003	S14	CITY OF PAWTUCKET
0005	000	1	KELTON	ST	376	Overhead	Distribution	Luminaire	LUM HPS RWY 70W	Active	70	90435-67003	S14	CITY OF PAWTUCKET
0002	000	1	KENILWORTH	WAY	377	Overhead	Distribution	Luminaire	LUM HPS RWY 70W	Active	70	90435-67003	S14	CITY OF PAWTUCKET
0003	000	1	KENILWORTH	WAY	377	Overhead	Distribution	Luminaire	LUM HPS RWY 100W	Active	100	90435-67003	S14	CITY OF PAWTUCKET
0002	000	1	KENMORE	ST	378	Overhead	Distribution	Luminaire	LUM HPS RWY 70W	Active	70	90435-67003	S14	CITY OF PAWTUCKET
0004	000	1	KENMORE	ST	378	Overhead	Distribution	Luminaire	LUM HPS RWY 70W	Active	70	90435-67003	S14	CITY OF PAWTUCKET
0006	000	1	KENMORE	ST	378	Overhead	Distribution	Luminaire	LUM HPS RWY 70W	Active	70	90435-67003	S14	CITY OF PAWTUCKET
0008	000	1	KENMORE	ST	378	Overhead	Distribution	Luminaire	LUM HPS RWY 70W	Active	70	90435-67003	S14	CITY OF PAWTUCKET
0010	000	1	KENMORE	ST	378	Overhead	Distribution	Luminaire	LUM HPS RWY 70W	Active	70	90435-67003	S14	CITY OF PAWTUCKET
0001	000	1	KENT	ST	379	Overhead	Distribution	Luminaire	LUM HPS RWY 70W	Active	70	90435-67003	S14	CITY OF PAWTUCKET
0002	000	1	KENT	ST	379	Overhead	Distribution	Luminaire	LUM HPS RWY 70W	Active	70	90435-67003	S14	CITY OF PAWTUCKET
0002	000	1	KENYON	AVE	380	Overhead	Distribution	Luminaire	LUM HPS RWY 70W	Active	70	90435-67003	S14	CITY OF PAWTUCKET
0004	000	1	KENYON	AVE	380	Overhead	Distribution	Luminaire	LUM HPS RWY 70W	Active	70	90435-67003	S14	CITY OF PAWTUCKET
0007	000	1	KENYON	AVE	380	Overhead	Distribution	Luminaire	LUM HPS RWY 70W	Active	70	90435-67003	S14	CITY OF PAWTUCKET
0009	000	1	KENYON	AVE	380	Overhead	Distribution	Luminaire	LUM HPS RWY 100W	Active	100	90435-67003	S14	CITY OF PAWTUCKET
0010	000	1	KENYON	AVE	380	Overhead	Distribution	Luminaire	LUM HPS RWY 100W	Active	100	90435-67003	S14	CITY OF PAWTUCKET
0011	000	1	KENYON	AVE	380	Overhead	Distribution	Luminaire	LUM HPS RWY 100W	Active	100	90435-67003	S14	CITY OF PAWTUCKET
0012	000	1	KENYON	AVE	380	Overhead	Distribution	Luminaire	LUM HPS RWY 100W	Active	100	90435-67003	S14	CITY OF PAWTUCKET
0013	000	1	KENYON	AVE	380	Overhead	Distribution	Luminaire	LUM HPS RWY 100W	Active	100	90435-67003	S14	CITY OF PAWTUCKET
0014	000	1	KENYON	AVE	380	Overhead	Distribution	Luminaire	LUM HPS RWY 100W	Active	100	90435-67003	S14	CITY OF PAWTUCKET
0015	000	1	KENYON	AVE	380	Overhead	Distribution	Luminaire	LUM HPS RWY 100W	Active	100	90435-67003	S14	CITY OF PAWTUCKET
0016	000	1	KENYON	AVE	380	Overhead	Distribution	Luminaire	LUM HPS RWY 70W	Active	70	90435-67003	S14	CITY OF PAWTUCKET
0017	000	1	KENYON	AVE	380	Overhead	Distribution	Luminaire	LUM HPS RWY 100W	Active	100	90435-67003	S14	CITY OF PAWTUCKET
0017	002	1	KENYON	AVE	380	Overhead	Distribution	Luminaire	LUM HPS RWY 100W	Active	100	90435-67003	S14	CITY OF PAWTUCKET

0019	000	1	KENYON	AVE	380	Overhead	Distribution	Luminaire	LUM HPS RWY 100W	Active	100	90435-67003	S14	CITY OF PAWTUCKET
0020	001	1	KENYON	AVE	380	Overhead	Distribution	Luminaire	LUM HPS RWY 100W	Active	100	90435-67003	S14	CITY OF PAWTUCKET
0022	000	1	KENYON	AVE	380	Overhead	Distribution	Luminaire	LUM HPS RWY 100W	Active	100	90435-67003	S14	CITY OF PAWTUCKET
0023	000	1	KENYON	AVE	380	Overhead	Distribution	Luminaire	LUM HPS RWY 250W	Active	250	90435-67003	S14	CITY OF PAWTUCKET
0026	000	1	KENYON	AVE	380	Overhead	Distribution	Luminaire	LUM HPS RWY 100W	Active	100	90435-67003	S14	CITY OF PAWTUCKET
0027	000	1	KENYON	AVE	380	Overhead	Distribution	Luminaire	LUM HPS RWY 70W	Active	70	90435-67003	S14	CITY OF PAWTUCKET
0029	000	1	KENYON	AVE	380	Overhead	Distribution	Luminaire	LUM HPS RWY 70W	Active	70	90435-67003	S14	CITY OF PAWTUCKET
0031	000	1	KENYON	AVE	380	Overhead	Distribution	Luminaire	LUM HPS RWY 70W	Active	70	90435-67003	S14	CITY OF PAWTUCKET
0033	000	1	KENYON	AVE	380	Overhead	Distribution	Luminaire	LUM HPS RWY 70W	Active	70	90435-67003	S14	CITY OF PAWTUCKET
0034	000	1	KENYON	AVE	380	Overhead	Distribution	Luminaire	LUM HPS RWY 70W	Active	70	90435-67003	S14	CITY OF PAWTUCKET
0036	000	1	KENYON	AVE	380	Overhead	Distribution	Luminaire	LUM HPS RWY 70W	Active	70	90435-67003	S14	CITY OF PAWTUCKET
0038	000	1	KENYON	AVE	380	Overhead	Distribution	Luminaire	LUM HPS RWY 70W	Active	70	90435-67003	S14	CITY OF PAWTUCKET
0040	000	1	KENYON	AVE	380	Overhead	Distribution	Luminaire	LUM HPS RWY 70W	Active	70	90435-67003	S14	CITY OF PAWTUCKET
0042	000	1	KENYON	AVE	380	Overhead	Distribution	Luminaire	LUM HPS RWY 70W	Active	70	90435-67003	S14	CITY OF PAWTUCKET
0044	000	1	KENYON	AVE	380	Overhead	Distribution	Luminaire	LUM HPS RWY 70W	Active	70	90435-67003	S14	CITY OF PAWTUCKET
0045	000	1	KENYON	AVE	380	Overhead	Distribution	Luminaire	LUM HPS RWY 70W	Active	70	90435-67003	S14	CITY OF PAWTUCKET
0046	000	1	KENYON	AVE	380	Overhead	Distribution	Luminaire	LUM HPS RWY 70W	Active	70	90435-67003	S14	CITY OF PAWTUCKET
0048	000	1	KENYON	AVE	380	Overhead	Distribution	Luminaire	LUM HPS RWY 70W	Active	70	90435-67003	S14	CITY OF PAWTUCKET
0050	000	1	KENYON	AVE	380	Overhead	Distribution	Luminaire	LUM HPS RWY 70W	Active	70	90435-67003	S14	CITY OF PAWTUCKET
0052	000	1	KENYON	AVE	380	Overhead	Distribution	Luminaire	LUM HPS RWY 70W	Active	70	90435-67003	S14	CITY OF PAWTUCKET
0054	000	1	KENYON	AVE	380	Overhead	Distribution	Luminaire	LUM HPS RWY 70W	Active	70	90435-67003	S14	CITY OF PAWTUCKET
0055	000	1	KENYON	AVE	380	Overhead	Distribution	Luminaire	LUM HPS RWY 250W	Active	250	90435-67003	S14	CITY OF PAWTUCKET
0002	000	1	KEOUGH	ST	381	Overhead	Distribution	Luminaire	LUM HPS RWY 70W	Active	70	90435-67003	S14	CITY OF PAWTUCKET
0002	000	1	KEPLER	ST	382	Overhead	Distribution	Luminaire	LUM HPS RWY 70W	Active	70	90435-67003	S14	CITY OF PAWTUCKET
0004	000	1	KEPLER	ST	382	Overhead	Distribution	Luminaire	LUM HPS RWY 70W	Active	70	90435-67003	S14	CITY OF PAWTUCKET
0006	000	1	KEPLER	ST	382	Overhead	Distribution	Luminaire	LUM HPS RWY 70W	Active	70	90435-67003	S14	CITY OF PAWTUCKET
0001	000	1	KIDS	WAY	383	Overhead	Distribution	Luminaire	LUM HPS RWY 100W	Active	100	90435-67003	S14	CITY OF PAWTUCKET
0002	000	1	KIDS	WAY	383	Overhead	Distribution	Luminaire	LUM HPS RWY 70W	Active	70	90435-67003	S14	CITY OF PAWTUCKET
0001	000	1	KIMBALL	AVE	384	Overhead	Distribution	Luminaire	LUM HPS RWY 70W	Active	70	90435-67003	S14	CITY OF PAWTUCKET
0002	000	1	KIMBALL	AVE	384	Overhead	Distribution	Luminaire	LUM HPS RWY 70W	Active	70	90435-67003	S14	CITY OF PAWTUCKET
0003	000	1	KIMBALL	AVE	384	Overhead	Distribution	Luminaire	LUM HPS RWY 70W	Active	70	90435-67003	S14	CITY OF PAWTUCKET
0005	000	1	KIMBALL	AVE	384	Overhead	Distribution	Luminaire	LUM HPS RWY 70W	Active	70	90435-67003	S14	CITY OF PAWTUCKET
0001	000	1	KING	ST	385	Overhead	Distribution	Luminaire	LUM HPS RWY 70W	Active	70	90435-67003	S14	CITY OF PAWTUCKET
0002	000	1	KING	ST	385	Overhead	Distribution	Luminaire	LUM HPS RWY 70W	Active	70	90435-67003	S14	CITY OF PAWTUCKET
0002	000	1	KING PHILLIP	RD	386	Overhead	Distribution	Luminaire	LUM HPS RWY 70W	Active	70	90435-67003	S14	CITY OF PAWTUCKET
0004	000	1	KING PHILLIP	RD	386	Overhead	Distribution	Luminaire	LUM HPS RWY 70W	Active	70	90435-67003	S14	CITY OF PAWTUCKET
0006	000	1	KING PHILLIP	RD	386	Overhead	Distribution	Luminaire	LUM HPS RWY 70W	Active	70	90435-67003	S14	CITY OF PAWTUCKET
0008	000	1	KING PHILLIP	RD	386	Overhead	Distribution	Luminaire	LUM HPS RWY 70W	Active	70	90435-67003	S14	CITY OF PAWTUCKET
0009	000	1	KING PHILLIP	RD	386	Overhead	Distribution	Luminaire	LUM HPS RWY 70W	Active	70	90435-67003	S14	CITY OF PAWTUCKET
0010	000	1	KING PHILLIP	RD	386	Overhead	Distribution	Luminaire	LUM HPS RWY 70W	Active	70	90435-67003	S14	CITY OF PAWTUCKET
0001	000	1	KIRK	DR	387	Overhead	Distribution	Luminaire	LUM HPS RWY 70W	Active	70	90435-67003	S14	CITY OF PAWTUCKET
0002	000	1	KIRK	DR	387	Overhead	Distribution	Luminaire	LUM HPS RWY 70W	Active	70	90435-67003	S14	CITY OF PAWTUCKET
0004	000	1	KIRK	DR	387	Overhead	Distribution	Luminaire	LUM HPS RWY 70W	Active	70	90435-67003	S14	CITY OF PAWTUCKET
0005	000	1	KIRK	DR	387	Overhead	Distribution	Luminaire	LUM HPS RWY 70W	Active	70	90435-67003	S14	CITY OF PAWTUCKET
0007	000	1	KIRK	DR	387	Overhead	Distribution	Luminaire	LUM HPS RWY 70W	Active	70	90435-67003	S14	CITY OF PAWTUCKET
0008	000	1	KIRK	DR	387	Overhead	Distribution	Luminaire	LUM HPS RWY 70W	Active	70	90435-67003	S14	CITY OF PAWTUCKET
0009	000	1	KIRK	DR	387	Overhead	Distribution	Luminaire	LUM HPS RWY 100W	Active	100	90435-67003	S14	CITY OF PAWTUCKET
0003	000	1	KNOWLES	ST	388	Overhead	Distribution	Luminaire	LUM HPS RWY 70W	Active	70	90435-67003	S14	CITY OF PAWTUCKET
0005	000	1	KNOWLES	ST	388	Overhead	Distribution	Luminaire	LUM HPS RWY 70W	Active	70	90435-67003	S14	CITY OF PAWTUCKET
0007	000	1	KNOWLES	ST	388	Overhead	Distribution	Luminaire	LUM HPS RWY 70W	Active	70	90435-67003	S14	CITY OF PAWTUCKET
0008	001	1	KNOWLES	ST	388	Overhead	Distribution	Luminaire	LUM HPS RWY 70W	Active	70	90435-67003	S14	CITY OF PAWTUCKET
0011	000	1	KNOWLES	ST	388	Overhead	Distribution	Luminaire	LUM HPS RWY 70W	Active	70	90435-67003	S14	CITY OF PAWTUCKET
0003	000	1	KOSSUTH	ST	389	Overhead	Distribution	Luminaire	LUM HPS RWY 70W	Active	70	90435-67003	S14	CITY OF PAWTUCKET
0005	000	1	KOSSUTH	ST	389	Overhead	Distribution	Luminaire	LUM HPS RWY 70W	Active	70	90435-67003	S14	CITY OF PAWTUCKET
0007	000	1	KOSSUTH	ST	389	Overhead	Distribution	Luminaire	LUM HPS RWY 70W	Active	70	90435-67003	S14	CITY OF PAWTUCKET
0001	000	1	LAFAYETTE	ST	390	Overhead	Distribution	Luminaire	LUM HPS RWY 70W	Active	70	90435-67003	S14	CITY OF PAWTUCKET
0002	000	1	LAFAYETTE	ST	390	Overhead	Distribution	Luminaire	LUM HPS RWY 70W	Active	70	90435-67003	S14	CITY OF PAWTUCKET
0003	000	1	LAFAYETTE	ST	390	Overhead	Distribution	Luminaire	LUM HPS RWY 70W	Active	70	90435-67003	S14	CITY OF PAWTUCKET
0005	000	1	LAFAYETTE	ST	390	Overhead	Distribution	Luminaire	LUM HPS RWY 70W	Active	70	90435-67003	S14	CITY OF PAWTUCKET
0009	000	1	LAFAYETTE	ST	390	Overhead	Distribution	Luminaire	LUM HPS RWY 70W	Active	70	90435-67003	S14	CITY OF PAWTUCKET
0011	000	1	LAFAYETTE	ST	390	Overhead	Distribution	Luminaire	LUM HPS RWY 70W	Active	70	90435-67003	S14	CITY OF PAWTUCKET
0015	000	1	LAFAYETTE	ST	390	Overhead	Distribution	Luminaire	LUM HPS RWY 70W	Active	70	90435-67003	S14	CITY OF PAWTUCKET
0018	000	1	LAFAYETTE	ST	390	Overhead	Distribution	Luminaire	LUM HPS RWY 70W	Active	70	90435-67003	S14	CITY OF PAWTUCKET

0020	000	1	LAFAYETTE	ST	390	Overhead	Distribution	Luminaire	LUM HPS RWY 70W	Active	70	90435-67003	S14	CITY OF PAWTUCKET
0023	000	1	LAFAYETTE	ST	390	Overhead	Distribution	Luminaire	LUM HPS RWY 70W	Active	70	90435-67003	S14	CITY OF PAWTUCKET
0024	000	1	LAFAYETTE	ST	390	Overhead	Distribution	Luminaire	LUM HPS RWY 70W	Active	70	90435-67003	S14	CITY OF PAWTUCKET
0026	000	1	LAFAYETTE	ST	390	Overhead	Distribution	Luminaire	LUM HPS RWY 70W	Active	70	90435-67003	S14	CITY OF PAWTUCKET
0028	000	1	LAFAYETTE	ST	390	Overhead	Distribution	Luminaire	LUM HPS RWY 100W	Active	100	90435-67003	S14	CITY OF PAWTUCKET
0029	000	1	LAFAYETTE	ST	390	Overhead	Distribution	Luminaire	LUM HPS RWY 100W	Active	100	90435-67003	S14	CITY OF PAWTUCKET
0001	000	1	LAKE	ST	391	Overhead	Distribution	Luminaire	LUM HPS RWY 70W	Active	70	90435-67003	S14	CITY OF PAWTUCKET
0002	000	1	LAKE	ST	391	Overhead	Distribution	Luminaire	LUM HPS RWY 70W	Active	70	90435-67003	S14	CITY OF PAWTUCKET
0004	000	1	LAKE	ST	391	Overhead	Distribution	Luminaire	LUM HPS RWY 70W	Active	70	90435-67003	S14	CITY OF PAWTUCKET
0006	000	1	LAKE	ST	391	Overhead	Distribution	Luminaire	LUM HPS RWY 70W	Active	70	90435-67003	S14	CITY OF PAWTUCKET
0007	000	1	LAKE	ST	391	Overhead	Distribution	Luminaire	LUM HPS RWY 70W	Active	70	90435-67003	S14	CITY OF PAWTUCKET
0002	000	1	LAKEVIEW	AVE	392	Overhead	Distribution	Luminaire	LUM HPS RWY 70W	Active	70	90435-67003	S14	CITY OF PAWTUCKET
0005	000	1	LAKEVIEW	AVE	392	Overhead	Distribution	Luminaire	LUM HPS RWY 70W	Active	70	90435-67003	S14	CITY OF PAWTUCKET
0007	000	1	LAKEVIEW	AVE	392	Overhead	Distribution	Luminaire	LUM HPS RWY 70W	Active	70	90435-67003	S14	CITY OF PAWTUCKET
0002	000	1	LANESBOROUGH	ST	393	Overhead	Distribution	Luminaire	LUM HPS RWY 70W	Active	70	90435-67003	S14	CITY OF PAWTUCKET
0004	000	1	LANESBOROUGH	ST	393	Overhead	Distribution	Luminaire	LUM HPS RWY 70W	Active	70	90435-67003	S14	CITY OF PAWTUCKET
0001	000	1	LANGDON	AVE	394	Overhead	Distribution	Luminaire	LUM HPS RWY 70W	Active	70	90435-67003	S14	CITY OF PAWTUCKET
0003	000	1	LANGDON	AVE	394	Overhead	Distribution	Luminaire	LUM HPS RWY 70W	Active	70	90435-67003	S14	CITY OF PAWTUCKET
0005	000	1	LANGDON	AVE	394	Overhead	Distribution	Luminaire	LUM HPS RWY 70W	Active	70	90435-67003	S14	CITY OF PAWTUCKET
0006	000	1	LANGDON	AVE	394	Overhead	Distribution	Luminaire	LUM HPS RWY 70W	Active	70	90435-67003	S14	CITY OF PAWTUCKET
0002	000	1	LANNI	DR	395	Overhead	Distribution	Luminaire	LUM HPS RWY 70W	Active	70	90435-67003	S14	CITY OF PAWTUCKET
0002	000	1	LARCH	ST	396	Overhead	Distribution	Luminaire	LUM HPS RWY 70W	Active	70	90435-67003	S14	CITY OF PAWTUCKET
0004	000	1	LARCH	ST	396	Overhead	Distribution	Luminaire	LUM HPS RWY 70W	Active	70	90435-67003	S14	CITY OF PAWTUCKET
0005	000	1	LARCH	ST	396	Overhead	Distribution	Luminaire	LUM HPS RWY 70W	Active	70	90435-67003	S14	CITY OF PAWTUCKET
0007	000	1	LARCH	ST	396	Overhead	Distribution	Luminaire	LUM HPS RWY 70W	Active	70	90435-67003	S14	CITY OF PAWTUCKET
0008	000	1	LARCH	ST	396	Overhead	Distribution	Luminaire	LUM HPS RWY 70W	Active	70	90435-67003	S14	CITY OF PAWTUCKET
0009	000	1	LARCH	ST	396	Overhead	Distribution	Luminaire	LUM HPS RWY 70W	Active	70	90435-67003	S14	CITY OF PAWTUCKET
0001	000	1	LAUDER	AVE	397	Overhead	Distribution	Luminaire	LUM HPS RWY 70W	Active	70	90435-67003	S14	CITY OF PAWTUCKET
0003	000	1	LAUDER	AVE	397	Overhead	Distribution	Luminaire	LUM HPS RWY 70W	Active	70	90435-67003	S14	CITY OF PAWTUCKET
0005	000	1	LAUDER	AVE	397	Overhead	Distribution	Luminaire	LUM HPS RWY 70W	Active	70	90435-67003	S14	CITY OF PAWTUCKET
0007	000	1	LAUDER	AVE	397	Overhead	Distribution	Luminaire	LUM HPS RWY 70W	Active	70	90435-67003	S14	CITY OF PAWTUCKET
0009	000	1	LAUDER	AVE	397	Overhead	Distribution	Luminaire	LUM HPS RWY 70W	Active	70	90435-67003	S14	CITY OF PAWTUCKET
0002	000	1	LAUREL	ST	398	Overhead	Distribution	Luminaire	LUM HPS RWY 70W	Active	70	90435-67003	S14	CITY OF PAWTUCKET
0003	000	1	LAUREL	ST	398	Overhead	Distribution	Luminaire	LUM HPS RWY 70W	Active	70	90435-67003	S14	CITY OF PAWTUCKET
0004	000	1	LAUREL	ST	398	Overhead	Distribution	Luminaire	LUM HPS RWY 70W	Active	70	90435-67003	S14	CITY OF PAWTUCKET
0001	000	1	LAWN	AVE	399	Overhead	Distribution	Luminaire	LUM HPS RWY 250W	Active	250	90435-67003	S14	CITY OF PAWTUCKET
0001	000	2	LAWN	AVE	399	Overhead	Distribution	Luminaire	LUM HPS RWY 70W	Active	70	90435-67003	S14	CITY OF PAWTUCKET
0002	000	1	LAWN	AVE	399	Overhead	Distribution	Luminaire	LUM HPS RWY 70W	Active	70	90435-67003	S14	CITY OF PAWTUCKET
0003	000	1	LAWN	AVE	399	Overhead	Distribution	Luminaire	LUM HPS RWY 70W	Active	70	90435-67003	S14	CITY OF PAWTUCKET
0004	000	1	LAWN	AVE	399	Overhead	Distribution	Luminaire	LUM HPS RWY 70W	Active	70	90435-67003	S14	CITY OF PAWTUCKET
0005	000	1	LAWN	AVE	399	Overhead	Distribution	Luminaire	LUM HPS RWY 70W	Active	70	90435-67003	S14	CITY OF PAWTUCKET
0006	000	1	LAWN	AVE	399	Overhead	Distribution	Luminaire	LUM HPS RWY 70W	Active	70	90435-67003	S14	CITY OF PAWTUCKET
0008	000	1	LAWN	AVE	399	Overhead	Distribution	Luminaire	LUM HPS RWY 70W	Active	70	90435-67003	S14	CITY OF PAWTUCKET
0002	000	1	LAWRENCE	ST	400	Overhead	Distribution	Luminaire	LUM HPS RWY 70W	Active	70	90435-67003	S14	CITY OF PAWTUCKET
0003	000	1	LAWRENCE	ST	400	Overhead	Distribution	Luminaire	LUM HPS RWY 70W	Active	70	90435-67003	S14	CITY OF PAWTUCKET
0004	000	1	LAWRENCE	ST	400	Overhead	Distribution	Luminaire	LUM HPS RWY 70W	Active	70	90435-67003	S14	CITY OF PAWTUCKET
0001	000	1	LAWTON	ST	401	Overhead	Distribution	Luminaire	LUM HPS RWY 70W	Active	70	90435-67003	S14	CITY OF PAWTUCKET
0002	000	1	LAWTON	ST	401	Overhead	Distribution	Luminaire	LUM HPS RWY 70W	Active	70	90435-67003	S14	CITY OF PAWTUCKET
0001	001	1	LEE	ST	403	Overhead	Distribution	Luminaire	LUM HPS RWY 70W	Active	70	90435-67003	S14	CITY OF PAWTUCKET
0003	000	1	LEE	ST	403	Overhead	Distribution	Luminaire	LUM HPS RWY 70W	Active	70	90435-67003	S14	CITY OF PAWTUCKET
0005	000	1	LEE	ST	403	Overhead	Distribution	Luminaire	LUM HPS RWY 70W	Active	70	90435-67003	S14	CITY OF PAWTUCKET
0007	000	1	LEE	ST	403	Overhead	Distribution	Luminaire	LUM HPS RWY 70W	Active	70	90435-67003	S14	CITY OF PAWTUCKET
0009	000	1	LEE	ST	403	Overhead	Distribution	Luminaire	LUM HPS RWY 70W	Active	70	90435-67003	S14	CITY OF PAWTUCKET
0011	000	1	LEE	ST	403	Overhead	Distribution	Luminaire	LUM HPS RWY 70W	Active	70	90435-67003	S14	CITY OF PAWTUCKET
0002	000	1	LEGION	DR	404	Overhead	Distribution	Luminaire	LUM HPS RWY 70W	Active	70	90435-67003	S14	CITY OF PAWTUCKET
0003	000	1	LEGION	DR	404	Overhead	Distribution	Luminaire	LUM HPS RWY 70W	Active	70	90435-67003	S14	CITY OF PAWTUCKET
0005	000	1	LEGION	DR	404	Overhead	Distribution	Luminaire	LUM HPS RWY 70W	Active	70	90435-67003	S14	CITY OF PAWTUCKET
0007	000	1	LEGION	DR	404	Overhead	Distribution	Luminaire	LUM HPS RWY 70W	Active	70	90435-67003	S14	CITY OF PAWTUCKET
0008	000	1	LEGION	DR	404	Overhead	Distribution	Luminaire	LUM HPS RWY 70W	Active	70	90435-67003	S14	CITY OF PAWTUCKET
0010	000	1	LEGION	DR	404	Overhead	Distribution	Luminaire	LUM HPS FLD 250W	Active	250	3371-64002	S14	CITY OF PAWTUCKET
0010	030	0	LEGION	DR	404	Overhead	Streetlighting	Pole	POLE - WOOD	Active	0	90435-67003	S14	CITY OF PAWTUCKET
0010	030	1	LEGION	DR	404	Overhead	Streetlighting	Luminaire	LUM HPS FLD 400W	Active	400	90435-67003	S14	CITY OF PAWTUCKET
0010	030	2	LEGION	DR	404	Overhead	Streetlighting	Luminaire	LUM HPS FLD 400W	Active	400	90435-67003	S14	CITY OF PAWTUCKET

0010	030	3	LEGION	DR	404	Overhead	Streetlighting	Luminaire	LUM HPS FLD 400W	Active	400	90435-67003	S14	CITY OF PAWTUCKET
0002	000	1	LEGRIS	AVE	405	Overhead	Distribution	Luminaire	LUM HPS RWY 70W	Active	70	90435-67003	S14	CITY OF PAWTUCKET
0004	000	1	LEGRIS	AVE	405	Overhead	Distribution	Luminaire	LUM HPS RWY 50W	Active	50	90435-67003	S14	CITY OF PAWTUCKET
0006	000	1	LEGRIS	AVE	405	Overhead	Distribution	Luminaire	LUM HPS RWY 70W	Active	70	90435-67003	S14	CITY OF PAWTUCKET
0002	000	1	LEICESTER	WAY	406	Overhead	Distribution	Luminaire	LUM HPS RWY 70W	Active	70	90435-67003	S14	CITY OF PAWTUCKET
0003	000	1	LEICESTER	WAY	406	Overhead	Distribution	Luminaire	LUM HPS RWY 70W	Active	70	90435-67003	S14	CITY OF PAWTUCKET
0002	000	1	LEONARD JENAR	DR	779	Overhead	Distribution	Luminaire	LUM MV RWY 175W	Active	175	3371-62008	S14	PAWTUCKET HOUSING AUTHORITY
0003	000	1	LEONARD JENAR	DR	779	Overhead	Distribution	Luminaire	LUM MV RWY 175W	Active	175	3371-62008	S14	PAWTUCKET HOUSING AUTHORITY
0005	000	1	LEONARD JENAR	DR	779	Overhead	Distribution	Luminaire	LUM HPS FLD 400W	Active	400	3371-62008	S14	PAWTUCKET HOUSING AUTHORITY
0006	000	1	LEONARD JENAR	DR	779	Overhead	Distribution	Luminaire	LUM MV RWY 175W	Active	175	3371-62008	S14	PAWTUCKET HOUSING AUTHORITY
0007	000	1	LEONARD JENAR	DR	779	Overhead	Distribution	Luminaire	LUM MV RWY 175W	Active	175	3371-62008	S14	PAWTUCKET HOUSING AUTHORITY
0008	000	1	LEONARD JENAR	DR	779	Overhead	Distribution	Luminaire	LUM MV RWY 175W	Active	175	3371-62008	S14	PAWTUCKET HOUSING AUTHORITY
0009	000	1	LEONARD JENAR	DR	779	Overhead	Distribution	Luminaire	LUM MV RWY 175W	Active	175	3371-62008	S14	PAWTUCKET HOUSING AUTHORITY
0010	000	1	LEONARD JENAR	DR	779	Overhead	Distribution	Luminaire	LUM MV RWY 175W	Active	175	3371-62008	S14	PAWTUCKET HOUSING AUTHORITY
0010	031	1	LEONARD JENAR	DR	779	Overhead	Distribution	Luminaire	LUM HPS FLD 400W	Active	400	3371-62008	S14	PAWTUCKET HOUSING AUTHORITY
0011	000	1	LEONARD JENAR	DR	779	Overhead	Distribution	Luminaire	LUM HPS RWY 100W	Active	100	3371-62008	S14	PAWTUCKET HOUSING AUTHORITY
0012	000	1	LEONARD JENAR	DR	779	Overhead	Distribution	Luminaire	LUM MV RWY 175W	Active	175	3371-62008	S14	PAWTUCKET HOUSING AUTHORITY
0012	030	1	LEONARD JENAR	DR	779	Overhead	Distribution	Luminaire	LUM HPS FLD 400W	Active	400	3371-62008	S14	PAWTUCKET HOUSING AUTHORITY
0012	030	2	LEONARD JENAR	DR	779	Overhead	Distribution	Luminaire	LUM HPS FLD 400W	Active	400	3371-62008	S14	PAWTUCKET HOUSING AUTHORITY
0012	030	3	LEONARD JENAR	DR	779	Overhead	Distribution	Luminaire	LUM HPS FLD 400W	Active	400	3371-62008	S14	PAWTUCKET HOUSING AUTHORITY
0012	031	1	LEONARD JENAR	DR	779	Overhead	Distribution	Luminaire	LUM HPS FLD 400W	Active	400	3371-62008	S14	PAWTUCKET HOUSING AUTHORITY
0012	032	0	LEONARD JENAR	DR	779	Overhead	Streetlighting	Pole	POLE - WOOD	Active	0	3371-62008	S14	PAWTUCKET HOUSING AUTHORITY
0012	032	1	LEONARD JENAR	DR	779	Overhead	Streetlighting	Luminaire	LUM HPS FLD 400W	Active	400	3371-62008	S14	PAWTUCKET HOUSING AUTHORITY
0012	032	2	LEONARD JENAR	DR	779	Overhead	Streetlighting	Luminaire	LUM HPS FLD 400W	Active	400	3371-62008	S14	PAWTUCKET HOUSING AUTHORITY
0013	000	1	LEONARD JENAR	DR	779	Overhead	Distribution	Luminaire	LUM HPS RWY 100W	Active	100	3371-62008	S14	PAWTUCKET HOUSING AUTHORITY
0014	000	1	LEONARD JENAR	DR	779	Overhead	Distribution	Luminaire	LUM MV RWY 175W	Active	175	3371-62008	S14	PAWTUCKET HOUSING AUTHORITY
0014	000	2	LEONARD JENAR	DR	779	Overhead	Distribution	Luminaire	LUM HPS FLD 400W	Active	400	3371-62008	S14	PAWTUCKET HOUSING AUTHORITY
0015	000	1	LEONARD JENAR	DR	779	Overhead	Distribution	Luminaire	LUM MV RWY 175W	Active	175	3371-62008	S14	PAWTUCKET HOUSING AUTHORITY
0016	000	1	LEONARD JENAR	DR	779	Overhead	Distribution	Luminaire	LUM MV RWY 175W	Active	175	3371-62008	S14	PAWTUCKET HOUSING AUTHORITY
0017	000	1	LEONARD JENAR	DR	779	Overhead	Distribution	Luminaire	LUM MV RWY 175W	Active	175	3371-62008	S14	PAWTUCKET HOUSING AUTHORITY
0001	000	1	LEWIS	ST	408	Overhead	Distribution	Luminaire	LUM HPS RWY 100W	Active	100	90435-67003	S14	CITY OF PAWTUCKET
0001	000	2	LEWIS	ST	408	Overhead	Distribution	Luminaire	LUM HPS FLD 250W	Active	250	90435-67003	S14	CITY OF PAWTUCKET
0002	000	1	LIBERTY	ST	409	Overhead	Distribution	Luminaire	LUM HPS RWY 70W	Active	70	90435-67003	S14	CITY OF PAWTUCKET
0005	000	1	LIBERTY	ST	409	Overhead	Distribution	Luminaire	LUM HPS RWY 70W	Active	70	90435-67003	S14	CITY OF PAWTUCKET
0006	001	1	LIBERTY	ST	409	Overhead	Distribution	Luminaire	LUM HPS RWY 70W	Active	70	90435-67003	S14	CITY OF PAWTUCKET
0008	000	1	LIBERTY	ST	409	Overhead	Distribution	Luminaire	LUM HPS RWY 70W	Active	70	90435-67003	S14	CITY OF PAWTUCKET
0013	000	1	LIBERTY	ST	409	Overhead	Distribution	Luminaire	LUM HPS RWY 70W	Active	70	90435-67003	S14	CITY OF PAWTUCKET
0015	000	1	LIBERTY	ST	409	Overhead	Distribution	Luminaire	LUM HPS RWY 70W	Active	70	90435-67003	S14	CITY OF PAWTUCKET
0017	000	1	LIBERTY	ST	409	Overhead	Distribution	Luminaire	LUM HPS RWY 70W	Active	70	90435-67003	S14	CITY OF PAWTUCKET
0019	000	1	LIBERTY	ST	409	Overhead	Distribution	Luminaire	LUM HPS RWY 100W	Active	100	90435-67003	S14	CITY OF PAWTUCKET
0001	000	1	LILAC	ST	410	Overhead	Distribution	Luminaire	LUM HPS RWY 70W	Active	70	90435-67003	S14	CITY OF PAWTUCKET
0002	000	1	LILAC	ST	410	Overhead	Distribution	Luminaire	LUM HPS RWY 70W	Active	70	90435-67003	S14	CITY OF PAWTUCKET
0005	000	1	LILAC	ST	410	Overhead	Distribution	Luminaire	LUM HPS RWY 70W	Active	70	90435-67003	S14	CITY OF PAWTUCKET
0006	000	1	LILAC	ST	410	Overhead	Distribution	Luminaire	LUM HPS RWY 70W	Active	70	90435-67003	S14	CITY OF PAWTUCKET
0007	000	1	LILAC	ST	410	Overhead	Distribution	Luminaire	LUM HPS RWY 70W	Active	70	90435-67003	S14	CITY OF PAWTUCKET
0002	000	1	LINCOLN	AVE	412	Overhead	Distribution	Luminaire	LUM HPS RWY 70W	Active	70	90435-67003	S14	CITY OF PAWTUCKET
0005	000	1	LINCOLN	AVE	412	Overhead	Distribution	Luminaire	LUM HPS RWY 70W	Active	70	90435-67003	S14	CITY OF PAWTUCKET
0006	000	1	LINCOLN	AVE	412	Overhead	Distribution	Luminaire	LUM HPS FLD 250W	Active	250	77966-82004	S14	PAWTUCKET SCHOOL
0007	000	1	LINCOLN	AVE	412	Overhead	Distribution	Luminaire	LUM HPS RWY 70W	Active	70	90435-67003	S14	CITY OF PAWTUCKET
0008	000	1	LINCOLN	AVE	412	Overhead	Distribution	Luminaire	LUM HPS FLD 400W	Active	400	77966-82004	S14	PAWTUCKET SCHOOL
0009	000	1	LINCOLN	AVE	412	Overhead	Distribution	Luminaire	LUM HPS RWY 70W	Active	70	90435-67003	S14	CITY OF PAWTUCKET
0011	000	1	LINCOLN	AVE	412	Overhead	Distribution	Luminaire	LUM HPS RWY 70W	Active	70	90435-67003	S14	CITY OF PAWTUCKET
0012	000	1	LINCOLN	AVE	412	Overhead	Distribution	Luminaire	LUM HPS RWY 70W	Active	70	90435-67003	S14	CITY OF PAWTUCKET
0014	000	1	LINCOLN	AVE	412	Overhead	Distribution	Luminaire	LUM HPS RWY 70W	Active	70	90435-67003	S14	CITY OF PAWTUCKET
0003	000	1	LINDEN	ST	413	Overhead	Distribution	Luminaire	LUM HPS RWY 100W	Active	100	90435-67003	S14	CITY OF PAWTUCKET
0004	000	1	LINDEN	ST	413	Overhead	Distribution	Luminaire	LUM HPS RWY 70W	Active	70	90435-67003	S14	CITY OF PAWTUCKET
0006	000	1	LINDEN	ST	413	Overhead	Distribution	Luminaire	LUM HPS RWY 100W	Active	100	90435-67003	S14	CITY OF PAWTUCKET
0002	000	1	LINDESTA	RD	414	Overhead	Distribution	Luminaire	LUM HPS RWY 70W	Active	70	90435-67003	S14	CITY OF PAWTUCKET
0004	000	1	LINDESTA	RD	414	Overhead	Distribution	Luminaire	LUM HPS RWY 70W	Active	70	90435-67003	S14	CITY OF PAWTUCKET
0006	000	1	LINDESTA	RD	414	Overhead	Distribution	Luminaire	LUM HPS RWY 70W	Active	70	90435-67003	S14	CITY OF PAWTUCKET
0003	000	1	LINTON	ST	415	Overhead	Distribution	Luminaire	LUM HPS RWY 70W	Active	70	90435-67003	S14	CITY OF PAWTUCKET
0005	000	1	LINTON	ST	415	Overhead	Distribution	Luminaire	LUM HPS RWY 70W	Active	70	90435-67003	S14	CITY OF PAWTUCKET
0007	000	1	LINTON	ST	415	Overhead	Distribution	Luminaire	LUM HPS RWY 70W	Active	70	90435-67003	S14	CITY OF PAWTUCKET

0009	000	1	LINTON	ST	415	Overhead	Distribution	Luminaire	LUM HPS RWY 70W	Active	70	90435-67003	S14	CITY OF PAWTUCKET
0001	000	1	LINWOOD	AVE	416	Overhead	Distribution	Luminaire	LUM HPS RWY 50W	Active	50	90435-67003	S14	CITY OF PAWTUCKET
0001	001	1	LINWOOD	AVE	416	Overhead	Distribution	Luminaire	LUM HPS RWY 70W	Active	70	90435-67003	S14	CITY OF PAWTUCKET
0002	000	1	LINWOOD	AVE	416	Overhead	Distribution	Luminaire	LUM HPS RWY 70W	Active	70	90435-67003	S14	CITY OF PAWTUCKET
0003	000	1	LINWOOD	AVE	416	Overhead	Distribution	Luminaire	LUM HPS RWY 70W	Active	70	90435-67003	S14	CITY OF PAWTUCKET
0005	000	1	LINWOOD	AVE	416	Overhead	Distribution	Luminaire	LUM HPS RWY 70W	Active	70	90435-67003	S14	CITY OF PAWTUCKET
0007	000	1	LINWOOD	AVE	416	Overhead	Distribution	Luminaire	LUM HPS RWY 70W	Active	70	90435-67003	S14	CITY OF PAWTUCKET
0008	000	1	LINWOOD	AVE	416	Overhead	Distribution	Luminaire	LUM HPS RWY 70W	Active	70	90435-67003	S14	CITY OF PAWTUCKET
0002	000	1	LITTLEFIELD	ST	417	Overhead	Distribution	Luminaire	LUM HPS RWY 70W	Active	70	90435-67003	S14	CITY OF PAWTUCKET
0004	000	1	LITTLEFIELD	ST	417	Overhead	Distribution	Luminaire	LUM HPS RWY 70W	Active	70	90435-67003	S14	CITY OF PAWTUCKET
0006	000	1	LITTLEFIELD	ST	417	Overhead	Distribution	Luminaire	LUM HPS RWY 70W	Active	70	90435-67003	S14	CITY OF PAWTUCKET
0008	000	1	LITTLEFIELD	ST	417	Overhead	Distribution	Luminaire	LUM HPS RWY 70W	Active	70	90435-67003	S14	CITY OF PAWTUCKET
0009	000	1	LITTLEFIELD	ST	417	Overhead	Distribution	Luminaire	LUM HPS RWY 250W	Active	250	90435-67003	S14	CITY OF PAWTUCKET
0011	000	1	LITTLEFIELD	ST	417	Overhead	Distribution	Luminaire	LUM HPS RWY 70W	Active	70	90435-67003	S14	CITY OF PAWTUCKET
0013	000	1	LITTLEFIELD	ST	417	Overhead	Distribution	Luminaire	LUM HPS RWY 70W	Active	70	90435-67003	S14	CITY OF PAWTUCKET
0015	000	1	LITTLEFIELD	ST	417	Overhead	Distribution	Luminaire	LUM HPS RWY 70W	Active	70	90435-67003	S14	CITY OF PAWTUCKET
0001	000	1	LIVERPOOL	ST	418	Overhead	Distribution	Luminaire	LUM HPS RWY 100W	Active	100	90435-67003	S14	CITY OF PAWTUCKET
0003	000	1	LIVERPOOL	ST	418	Overhead	Distribution	Luminaire	LUM HPS RWY 100W	Active	100	90435-67003	S14	CITY OF PAWTUCKET
0006	000	1	LIVERPOOL	ST	418	Overhead	Distribution	Luminaire	LUM HPS RWY 100W	Active	100	90435-67003	S14	CITY OF PAWTUCKET
0008	000	1	LIVERPOOL	ST	418	Overhead	Distribution	Luminaire	LUM HPS RWY 100W	Active	100	90435-67003	S14	CITY OF PAWTUCKET
0002	000	1	LLOYD	ST	419	Overhead	Distribution	Luminaire	LUM HPS RWY 70W	Active	70	90435-67003	S14	CITY OF PAWTUCKET
0004	000	1	LLOYD	ST	419	Overhead	Distribution	Luminaire	LUM HPS RWY 100W	Active	100	90435-67003	S14	CITY OF PAWTUCKET
0002	000	1	LLOYD PHILLIP	CT	776	Overhead	Distribution	Luminaire	LUM HPS RWY 70W	Active	70	90435-67003	S14	CITY OF PAWTUCKET
0004	000	1	LLOYD PHILLIP	CT	776	Overhead	Distribution	Luminaire	LUM HPS RWY 70W	Active	70	90435-67003	S14	CITY OF PAWTUCKET
0002	000	1	LOCKBRIDGE	ST	420	Overhead	Distribution	Luminaire	LUM HPS RWY 70W	Active	70	90435-67003	S14	CITY OF PAWTUCKET
0004	000	1	LOCKBRIDGE	ST	420	Overhead	Distribution	Luminaire	LUM HPS RWY 70W	Active	70	90435-67003	S14	CITY OF PAWTUCKET
0006	000	1	LOCKBRIDGE	ST	420	Overhead	Distribution	Luminaire	LUM HPS RWY 70W	Active	70	90435-67003	S14	CITY OF PAWTUCKET
0008	000	1	LOCKBRIDGE	ST	420	Overhead	Distribution	Luminaire	LUM HPS RWY 70W	Active	70	90435-67003	S14	CITY OF PAWTUCKET
0010	000	1	LOCKBRIDGE	ST	420	Overhead	Distribution	Luminaire	LUM HPS RWY 70W	Active	70	90435-67003	S14	CITY OF PAWTUCKET
0002	000	1	LOCUST	ST	421	Overhead	Distribution	Luminaire	LUM HPS RWY 70W	Active	70	90435-67003	S14	CITY OF PAWTUCKET
0004	000	1	LOCUST	ST	421	Overhead	Distribution	Luminaire	LUM HPS RWY 70W	Active	70	90435-67003	S14	CITY OF PAWTUCKET
0002	000	1	LODI	ST	422	Overhead	Distribution	Luminaire	LUM HPS RWY 70W	Active	70	90435-67003	S14	CITY OF PAWTUCKET
0003	000	1	LODI	ST	422	Overhead	Distribution	Luminaire	LUM HPS RWY 70W	Active	70	90435-67003	S14	CITY OF PAWTUCKET
0001	000	1	LONDON	AVE	423	Overhead	Distribution	Luminaire	LUM HPS RWY 70W	Active	70	90435-67003	S14	CITY OF PAWTUCKET
0002	000	1	LONDON	AVE	423	Overhead	Distribution	Luminaire	LUM HPS RWY 70W	Active	70	90435-67003	S14	CITY OF PAWTUCKET
0004	000	1	LONDON	AVE	423	Overhead	Distribution	Luminaire	LUM HPS RWY 70W	Active	70	90435-67003	S14	CITY OF PAWTUCKET
0006	000	1	LONDON	AVE	423	Overhead	Distribution	Luminaire	LUM HPS RWY 100W	Active	100	90435-67003	S14	CITY OF PAWTUCKET
0010	000	1	LONDON	AVE	423	Overhead	Distribution	Luminaire	LUM HPS RWY 70W	Active	70	90435-67003	S14	CITY OF PAWTUCKET
0012	000	1	LONDON	AVE	423	Overhead	Distribution	Luminaire	LUM HPS RWY 70W	Active	70	90435-67003	S14	CITY OF PAWTUCKET
0014	000	1	LONDON	AVE	423	Overhead	Distribution	Luminaire	LUM HPS RWY 100W	Active	100	90435-67003	S14	CITY OF PAWTUCKET
0016	000	1	LONDON	AVE	423	Overhead	Distribution	Luminaire	LUM HPS RWY 70W	Active	70	90435-67003	S14	CITY OF PAWTUCKET
0018	000	1	LONDON	AVE	423	Overhead	Distribution	Luminaire	LUM HPS RWY 70W	Active	70	90435-67003	S14	CITY OF PAWTUCKET
0002	000	1	LONGFELLOW	ST	424	Overhead	Distribution	Luminaire	LUM HPS RWY 70W	Active	70	90435-67003	S14	CITY OF PAWTUCKET
0003	000	1	LONGFELLOW	ST	424	Overhead	Distribution	Luminaire	LUM HPS RWY 70W	Active	70	90435-67003	S14	CITY OF PAWTUCKET
0001	000	1	LONGLEY	CT	425	Overhead	Distribution	Luminaire	LUM HPS RWY 70W	Active	70	90435-67003	S14	CITY OF PAWTUCKET
0002	000	1	LONSDALE	AVE	426	Overhead	Distribution	Luminaire	LUM HPS RWY 70W	Active	70	90435-67003	S14	CITY OF PAWTUCKET
0005	000	1	LONSDALE	AVE	426	Overhead	Distribution	Luminaire	LUM HPS RWY 100W	Active	100	90435-67003	S14	CITY OF PAWTUCKET
0006	000	1	LONSDALE	AVE	426	Overhead	Distribution	Luminaire	LUM HPS RWY 100W	Active	100	90435-67003	S14	CITY OF PAWTUCKET
0009	000	1	LONSDALE	AVE	426	Overhead	Distribution	Luminaire	LUM HPS RWY 100W	Active	100	90435-67003	S14	CITY OF PAWTUCKET
0010	000	1	LONSDALE	AVE	426	Overhead	Distribution	Luminaire	LUM HPS RWY 100W	Active	100	90435-67003	S14	CITY OF PAWTUCKET
0013	000	1	LONSDALE	AVE	426	Overhead	Distribution	Luminaire	LUM HPS RWY 100W	Active	100	90435-67003	S14	CITY OF PAWTUCKET
0014	000	1	LONSDALE	AVE	426	Overhead	Distribution	Luminaire	LUM HPS RWY 100W	Active	100	90435-67003	S14	CITY OF PAWTUCKET
0017	000	1	LONSDALE	AVE	426	Overhead	Distribution	Luminaire	LUM HPS RWY 250W	Active	250	90435-67003	S14	CITY OF PAWTUCKET
0018	000	1	LONSDALE	AVE	426	Overhead	Distribution	Luminaire	LUM HPS RWY 250W	Active	250	90435-67003	S14	CITY OF PAWTUCKET
0024	000	1	LONSDALE	AVE	426	Overhead	Distribution	Luminaire	LUM HPS RWY 250W	Active	250	90435-67003	S14	CITY OF PAWTUCKET
0028	000	1	LONSDALE	AVE	426	Overhead	Distribution	Luminaire	LUM HPS RWY 250W	Active	250	90435-67003	S14	CITY OF PAWTUCKET
0029	000	1	LONSDALE	AVE	426	Overhead	Distribution	Luminaire	LUM HPS RWY 100W	Active	100	90435-67003	S14	CITY OF PAWTUCKET
0033	000	1	LONSDALE	AVE	426	Overhead	Distribution	Luminaire	LUM HPS RWY 100W	Active	100	90435-67003	S14	CITY OF PAWTUCKET
0035	000	1	LONSDALE	AVE	426	Overhead	Distribution	Luminaire	LUM HPS RWY 100W	Active	100	90435-67003	S14	CITY OF PAWTUCKET
0035	000	2	LONSDALE	AVE	426	Overhead	Distribution	Luminaire	LUM HPS RWY 250W	Active	250	90435-67003	S14	CITY OF PAWTUCKET
0042	000	1	LONSDALE	AVE	426	Overhead	Distribution	Luminaire	LUM HPS RWY 250W	Active	250	90435-67003	S14	CITY OF PAWTUCKET
0044	000	1	LONSDALE	AVE	426	Overhead	Distribution	Luminaire	LUM HPS RWY 250W	Active	250	90435-67003	S14	CITY OF PAWTUCKET
0046	000	1	LONSDALE	AVE	426	Overhead	Distribution	Luminaire	LUM HPS RWY 250W	Active	250	90435-67003	S14	CITY OF PAWTUCKET

0050	000	1	LONSDALE	AVE	426	Overhead	Distribution	Luminaire	LUM HPS RWY 100W	Active	100	90435-67003	S14	CITY OF PAWTUCKET
0052	000	1	LONSDALE	AVE	426	Overhead	Distribution	Luminaire	LUM HPS RWY 100W	Active	100	90435-67003	S14	CITY OF PAWTUCKET
0054	000	1	LONSDALE	AVE	426	Overhead	Distribution	Luminaire	LUM HPS RWY 250W	Active	250	90435-67003	S14	CITY OF PAWTUCKET
0056	000	1	LONSDALE	AVE	426	Overhead	Distribution	Luminaire	LUM HPS RWY 100W	Active	100	90435-67003	S14	CITY OF PAWTUCKET
0058	000	1	LONSDALE	AVE	426	Overhead	Distribution	Luminaire	LUM HPS RWY 250W	Active	250	90435-67003	S14	CITY OF PAWTUCKET
0060	000	1	LONSDALE	AVE	426	Overhead	Distribution	Luminaire	LUM HPS RWY 250W	Active	250	90435-67003	S14	CITY OF PAWTUCKET
0062	000	1	LONSDALE	AVE	426	Overhead	Distribution	Luminaire	LUM HPS RWY 250W	Active	250	90435-67003	S14	CITY OF PAWTUCKET
0068	000	1	LONSDALE	AVE	426	Overhead	Distribution	Luminaire	LUM HPS RWY 250W	Active	250	90435-67003	S14	CITY OF PAWTUCKET
0070	000	1	LONSDALE	AVE	426	Overhead	Distribution	Luminaire	LUM HPS RWY 250W	Active	250	90435-67003	S14	CITY OF PAWTUCKET
0074	000	1	LONSDALE	AVE	426	Overhead	Distribution	Luminaire	LUM HPS RWY 100W	Active	100	90435-67003	S14	CITY OF PAWTUCKET
0075	000	1	LONSDALE	AVE	426	Overhead	Distribution	Luminaire	LUM HPS RWY 100W	Active	100	90435-67003	S14	CITY OF PAWTUCKET
0076	001	1	LONSDALE	AVE	426	Overhead	Distribution	Luminaire	LUM HPS RWY 100W	Active	100	90435-67003	S14	CITY OF PAWTUCKET
0079	000	1	LONSDALE	AVE	426	Overhead	Distribution	Luminaire	LUM HPS RWY 100W	Active	100	90435-67003	S14	CITY OF PAWTUCKET
0082	000	1	LONSDALE	AVE	426	Overhead	Distribution	Luminaire	LUM HPS RWY 100W	Active	100	90435-67003	S14	CITY OF PAWTUCKET
0083	000	1	LONSDALE	AVE	426	Overhead	Distribution	Luminaire	LUM HPS RWY 100W	Active	100	90435-67003	S14	CITY OF PAWTUCKET
0085	000	1	LONSDALE	AVE	426	Overhead	Distribution	Luminaire	LUM HPS RWY 250W	Active	250	90435-67003	S14	CITY OF PAWTUCKET
0087	000	1	LONSDALE	AVE	426	Overhead	Distribution	Luminaire	LUM HPS RWY 250W	Active	250	90435-67003	S14	CITY OF PAWTUCKET
0091	000	1	LONSDALE	AVE	426	Overhead	Distribution	Luminaire	LUM HPS RWY 250W	Active	250	90435-67003	S14	CITY OF PAWTUCKET
0095	000	1	LONSDALE	AVE	426	Overhead	Distribution	Luminaire	LUM HPS RWY 250W	Active	250	90435-67003	S14	CITY OF PAWTUCKET
0098	000	1	LONSDALE	AVE	426	Overhead	Distribution	Luminaire	LUM HPS RWY 250W	Active	250	90435-67003	S14	CITY OF PAWTUCKET
0001	000	1	LORING	PKWY	427	Overhead	Distribution	Luminaire	LUM HPS RWY 100W	Active	100	90435-67003	S14	CITY OF PAWTUCKET
0003	000	1	LORING	PKWY	427	Overhead	Distribution	Luminaire	LUM HPS RWY 70W	Active	70	90435-67003	S14	CITY OF PAWTUCKET
0004	000	1	LORING	PKWY	427	Overhead	Distribution	Luminaire	LUM HPS RWY 70W	Active	70	90435-67003	S14	CITY OF PAWTUCKET
0005	000	1	LORING	PKWY	427	Overhead	Distribution	Luminaire	LUM HPS RWY 70W	Active	70	90435-67003	S14	CITY OF PAWTUCKET
0007	000	1	LORING	PKWY	427	Overhead	Distribution	Luminaire	LUM HPS RWY 70W	Active	70	90435-67003	S14	CITY OF PAWTUCKET
0009	000	1	LORING	PKWY	427	Overhead	Distribution	Luminaire	LUM HPS RWY 70W	Active	70	90435-67003	S14	CITY OF PAWTUCKET
0001	000	1	LORRAINE	ST	428	Overhead	Distribution	Luminaire	LUM HPS RWY 100W	Active	100	90435-67003	S14	CITY OF PAWTUCKET
0002	000	1	LORRAINE	ST	428	Overhead	Distribution	Luminaire	LUM HPS RWY 100W	Active	100	90435-67003	S14	CITY OF PAWTUCKET
0003	000	1	LORRAINE	ST	428	Overhead	Distribution	Luminaire	LUM HPS RWY 100W	Active	100	90435-67003	S14	CITY OF PAWTUCKET
0005	000	1	LORRAINE	ST	428	Overhead	Distribution	Luminaire	LUM HPS RWY 100W	Active	100	90435-67003	S14	CITY OF PAWTUCKET
0007	000	1	LORRAINE	ST	428	Overhead	Distribution	Luminaire	LUM HPS RWY 100W	Active	100	90435-67003	S14	CITY OF PAWTUCKET
0008	000	1	LORRAINE	ST	428	Overhead	Distribution	Luminaire	LUM HPS RWY 100W	Active	100	90435-67003	S14	CITY OF PAWTUCKET
0009	000	1	LORRAINE	ST	428	Overhead	Distribution	Luminaire	LUM HPS RWY 100W	Active	100	90435-67003	S14	CITY OF PAWTUCKET
0010	000	1	LORRAINE	ST	428	Overhead	Distribution	Luminaire	LUM HPS RWY 100W	Active	100	90435-67003	S14	CITY OF PAWTUCKET
0011	000	1	LORRAINE	ST	428	Overhead	Distribution	Luminaire	LUM HPS RWY 100W	Active	100	90435-67003	S14	CITY OF PAWTUCKET
0012	000	1	LORRAINE	ST	428	Overhead	Distribution	Luminaire	LUM HPS RWY 100W	Active	100	90435-67003	S14	CITY OF PAWTUCKET
0013	000	1	LORRAINE	ST	428	Overhead	Distribution	Luminaire	LUM HPS RWY 100W	Active	100	90435-67003	S14	CITY OF PAWTUCKET
0007	000	1	LOWDEN	ST	430	Overhead	Distribution	Luminaire	LUM HPS RWY 70W	Active	70	90435-67003	S14	CITY OF PAWTUCKET
0009	000	1	LOWDEN	ST	430	Overhead	Distribution	Luminaire	LUM HPS RWY 70W	Active	70	90435-67003	S14	CITY OF PAWTUCKET
0011	000	1	LOWDEN	ST	430	Overhead	Distribution	Luminaire	LUM HPS RWY 70W	Active	70	90435-67003	S14	CITY OF PAWTUCKET
0012	000	1	LOWDEN	ST	430	Overhead	Distribution	Luminaire	LUM HPS RWY 70W	Active	70	90435-67003	S14	CITY OF PAWTUCKET
0015	000	1	LOWDEN	ST	430	Overhead	Distribution	Luminaire	LUM HPS RWY 70W	Active	70	90435-67003	S14	CITY OF PAWTUCKET
0017	000	1	LOWDEN	ST	430	Overhead	Distribution	Luminaire	LUM HPS RWY 70W	Active	70	90435-67003	S14	CITY OF PAWTUCKET
0019	000	1	LOWDEN	ST	430	Overhead	Distribution	Luminaire	LUM HPS RWY 70W	Active	70	90435-67003	S14	CITY OF PAWTUCKET
0019	001	1	LOWDEN	ST	430	Overhead	Distribution	Luminaire	LUM HPS RWY 70W	Active	70	90435-67003	S14	CITY OF PAWTUCKET
0021	000	1	LOWDEN	ST	430	Overhead	Distribution	Luminaire	LUM HPS RWY 70W	Active	70	90435-67003	S14	CITY OF PAWTUCKET
0022	000	1	LOWDEN	ST	430	Overhead	Distribution	Luminaire	LUM HPS RWY 70W	Active	70	90435-67003	S14	CITY OF PAWTUCKET
0023	000	1	LOWDEN	ST	430	Overhead	Distribution	Luminaire	LUM HPS RWY 70W	Active	70	90435-67003	S14	CITY OF PAWTUCKET
0025	000	1	LOWDEN	ST	430	Overhead	Distribution	Luminaire	LUM HPS RWY 70W	Active	70	90435-67003	S14	CITY OF PAWTUCKET
0027	000	1	LOWDEN	ST	430	Overhead	Distribution	Luminaire	LUM HPS RWY 70W	Active	70	90435-67003	S14	CITY OF PAWTUCKET
0029	000	1	LOWDEN	ST	430	Overhead	Distribution	Luminaire	LUM HPS RWY 70W	Active	70	90435-67003	S14	CITY OF PAWTUCKET
0031	000	1	LOWDEN	ST	430	Overhead	Distribution	Luminaire	LUM HPS RWY 70W	Active	70	90435-67003	S14	CITY OF PAWTUCKET
0031	001	1	LOWDEN	ST	430	Overhead	Distribution	Luminaire	LUM HPS RWY 70W	Active	70	90435-67003	S14	CITY OF PAWTUCKET
0035	000	1	LOWDEN	ST	430	Overhead	Distribution	Luminaire	LUM HPS RWY 70W	Active	70	90435-67003	S14	CITY OF PAWTUCKET
0036	000	1	LOWDEN	ST	430	Overhead	Distribution	Luminaire	LUM HPS RWY 70W	Active	70	90435-67003	S14	CITY OF PAWTUCKET
0002	000	1	LOWELL	AVE	431	Overhead	Distribution	Luminaire	LUM HPS RWY 70W	Active	70	90435-67003	S14	CITY OF PAWTUCKET
0004	000	1	LOWELL	AVE	431	Overhead	Distribution	Luminaire	LUM HPS RWY 70W	Active	70	90435-67003	S14	CITY OF PAWTUCKET
0002	000	1	LUCAS	ST	432	Overhead	Distribution	Luminaire	LUM HPS RWY 70W	Active	70	90435-67003	S14	CITY OF PAWTUCKET
0004	000	1	LUCAS	ST	432	Overhead	Distribution	Luminaire	LUM HPS RWY 70W	Active	70	90435-67003	S14	CITY OF PAWTUCKET
0006	000	1	LUCAS	ST	432	Overhead	Distribution	Luminaire	LUM HPS RWY 70W	Active	70	90435-67003	S14	CITY OF PAWTUCKET
0002	000	1	LUPINE	ST	433	Overhead	Distribution	Luminaire	LUM HPS RWY 70W	Active	70	90435-67003	S14	CITY OF PAWTUCKET
0003	000	1	LUPINE	ST	433	Overhead	Distribution	Luminaire	LUM HPS RWY 70W	Active	70	90435-67003	S14	CITY OF PAWTUCKET
0004	000	1	LUPINE	ST	433	Overhead	Distribution	Luminaire	LUM HPS RWY 70W	Active	70	90435-67003	S14	CITY OF PAWTUCKET

0008	000	1	LUPINE	ST	433	Overhead	Distribution	Luminaire	LUM HPS RWY 70W	Active	70	90435-67003	S14	CITY OF PAWTUCKET
0003	000	1	LYMAN	ST	434	Overhead	Distribution	Luminaire	LUM HPS FLD 400W	Active	400	90435-66006	S14	PAWTUCKET SCH DEPT
0004	000	1	LYMAN	ST	434	Overhead	Distribution	Luminaire	LUM HPS FLD 400W	Active	400	90435-66006	S14	PAWTUCKET SCH DEPT
0005	000	1	LYMAN	ST	434	Overhead	Distribution	Luminaire	LUM HPS FLD 400W	Active	400	90435-66006	S14	PAWTUCKET SCH DEPT
0006	000	1	LYMAN	ST	434	Overhead	Distribution	Luminaire	LUM HPS FLD 400W	Active	400	90435-66006	S14	PAWTUCKET SCH DEPT
0008	000	1	LYMAN	ST	434	Overhead	Distribution	Luminaire	LUM HPS RWY 70W	Active	70	90435-67003	S14	CITY OF PAWTUCKET
0009	000	1	LYMAN	ST	434	Overhead	Distribution	Luminaire	LUM HPS RWY 100W	Active	100	90435-67003	S14	CITY OF PAWTUCKET
0010	000	1	LYMAN	ST	434	Overhead	Distribution	Luminaire	LUM HPS RWY 70W	Active	70	90435-67003	S14	CITY OF PAWTUCKET
0012	000	1	LYMAN	ST	434	Overhead	Distribution	Luminaire	LUM HPS RWY 70W	Active	70	90435-67003	S14	CITY OF PAWTUCKET
0013	000	1	LYMAN	ST	434	Overhead	Distribution	Luminaire	LUM HPS RWY 70W	Active	70	90435-67003	S14	CITY OF PAWTUCKET
0014	000	1	LYMAN	ST	434	Overhead	Distribution	Luminaire	LUM HPS RWY 70W	Active	70	90435-67003	S14	CITY OF PAWTUCKET
0001	000	2	LYON	ST	435	Overhead	Distribution	Luminaire	LUM HPS RWY 70W	Active	70	90435-67003	S14	CITY OF PAWTUCKET
0002	000	1	LYON	ST	435	Overhead	Distribution	Luminaire	LUM HPS RWY 70W	Active	70	90435-67003	S14	CITY OF PAWTUCKET
0004	000	1	LYON	ST	435	Overhead	Distribution	Luminaire	LUM HPS RWY 70W	Active	70	90435-67003	S14	CITY OF PAWTUCKET
0006	000	1	LYON	ST	435	Overhead	Distribution	Luminaire	LUM HPS RWY 70W	Active	70	90435-67003	S14	CITY OF PAWTUCKET
0002	000	1	MABEL	ST	436	Overhead	Distribution	Luminaire	LUM HPS RWY 100W	Active	100	90435-67003	S14	CITY OF PAWTUCKET
0004	000	1	MABEL	ST	436	Overhead	Distribution	Luminaire	LUM HPS RWY 70W	Active	70	90435-67003	S14	CITY OF PAWTUCKET
0002	000	1	MADISON	ST	437	Overhead	Distribution	Luminaire	LUM HPS RWY 70W	Active	70	90435-67003	S14	CITY OF PAWTUCKET
0003	000	1	MADISON	ST	437	Overhead	Distribution	Luminaire	LUM HPS RWY 70W	Active	70	90435-67003	S14	CITY OF PAWTUCKET
0008	000	1	MADISON	ST	437	Overhead	Distribution	Luminaire	LUM HPS RWY 70W	Active	70	90435-67003	S14	CITY OF PAWTUCKET
0011	000	1	MADISON	ST	437	Overhead	Distribution	Luminaire	LUM HPS RWY 70W	Active	70	90435-67003	S14	CITY OF PAWTUCKET
0001	000	1	MAGILL	ST	438	Overhead	Distribution	Luminaire	LUM HPS RWY 100W	Active	100	90435-67003	S14	CITY OF PAWTUCKET
0003	000	1	MAGILL	ST	438	Overhead	Distribution	Luminaire	LUM HPS RWY 70W	Active	70	90435-67003	S14	CITY OF PAWTUCKET
0004	000	1	MAGILL	ST	438	Overhead	Distribution	Luminaire	LUM HPS RWY 70W	Active	70	90435-67003	S14	CITY OF PAWTUCKET
0006	000	1	MAGILL	ST	438	Overhead	Distribution	Luminaire	LUM HPS RWY 70W	Active	70	90435-67003	S14	CITY OF PAWTUCKET
0007	000	1	MAGILL	ST	438	Overhead	Distribution	Luminaire	LUM HPS RWY 70W	Active	70	90435-67003	S14	CITY OF PAWTUCKET
0009	000	1	MAGILL	ST	438	Overhead	Distribution	Luminaire	LUM HPS RWY 70W	Active	70	90435-67003	S14	CITY OF PAWTUCKET
0011	001	1	MAGILL	ST	438	Overhead	Distribution	Luminaire	LUM HPS RWY 100W	Active	100	90435-67003	S14	CITY OF PAWTUCKET
0012	000	1	MAGILL	ST	438	Overhead	Distribution	Luminaire	LUM HPS RWY 70W	Active	70	90435-67003	S14	CITY OF PAWTUCKET
0014	000	1	MAGILL	ST	438	Overhead	Distribution	Luminaire	LUM HPS RWY 70W	Active	70	90435-67003	S14	CITY OF PAWTUCKET
0015	000	1	MAGILL	ST	438	Overhead	Distribution	Luminaire	LUM HPS RWY 100W	Active	100	90435-67003	S14	CITY OF PAWTUCKET
0016	000	1	MAGILL	ST	438	Overhead	Distribution	Luminaire	LUM HPS RWY 70W	Active	70	90435-67003	S14	CITY OF PAWTUCKET
0017	000	1	MAGILL	ST	438	Overhead	Distribution	Luminaire	LUM HPS RWY 100W	Active	100	90435-67003	S14	CITY OF PAWTUCKET
0018	000	1	MAGILL	ST	438	Overhead	Distribution	Luminaire	LUM HPS RWY 100W	Active	100	90435-67003	S14	CITY OF PAWTUCKET
0020	000	1	MAGILL	ST	438	Overhead	Distribution	Luminaire	LUM HPS RWY 70W	Active	70	90435-67003	S14	CITY OF PAWTUCKET
0021	000	1	MAGILL	ST	438	Overhead	Distribution	Luminaire	LUM HPS RWY 70W	Active	70	90435-67003	S14	CITY OF PAWTUCKET
0022	000	1	MAGILL	ST	438	Overhead	Distribution	Luminaire	LUM HPS RWY 70W	Active	70	90435-67003	S14	CITY OF PAWTUCKET
0001	000	1	MAGNOLIA	ST	439	Overhead	Distribution	Luminaire	LUM HPS RWY 70W	Active	70	90435-67003	S14	CITY OF PAWTUCKET
0002	000	1	MAGNOLIA	ST	439	Overhead	Distribution	Luminaire	LUM HPS RWY 70W	Active	70	90435-67003	S14	CITY OF PAWTUCKET
0004	000	1	MAGNOLIA	ST	439	Overhead	Distribution	Luminaire	LUM HPS RWY 70W	Active	70	90435-67003	S14	CITY OF PAWTUCKET
0002	000	1	MAIN	ST	440	Overhead	Distribution	Luminaire	LUM HPS RWY 250W	Active	250	90435-67003	S14	CITY OF PAWTUCKET
0003	000	1	MAIN	ST	440	Overhead	Distribution	Luminaire	LUM HPS RWY 250W	Active	250	90435-67003	S14	CITY OF PAWTUCKET
0004	000	1	MAIN	ST	440	Overhead	Distribution	Luminaire	LUM HPS RWY 250W	Active	250	90435-67003	S14	CITY OF PAWTUCKET
0006	000	0	MAIN	ST	440	Underground	Streetlighting	Pole	POLE METAL =>25FT	Active	0	90435-67003	S14	CITY OF PAWTUCKET
0006	000	1	MAIN	ST	440	Underground	Streetlighting	Luminaire	LUM HPS RWY 250W	Active	250	90435-67003	S14	CITY OF PAWTUCKET
0010	000	0	MAIN	ST	440	Underground	Streetlighting	Pole	POLE METAL =>25FT	Active	0	90435-67003	S14	CITY OF PAWTUCKET
0010	000	1	MAIN	ST	440	Underground	Streetlighting	Luminaire	LUM HPS RWY 250W	Active	250	90435-67003	S14	CITY OF PAWTUCKET
0011	000	0	MAIN	ST	440	Underground	Streetlighting	Pole	POLE METAL =>25FT	Active	0	90435-67003	S14	CITY OF PAWTUCKET
0011	000	1	MAIN	ST	440	Underground	Streetlighting	Luminaire	LUM HPS RWY 250W	Active	250	90435-67003	S14	CITY OF PAWTUCKET
0012	000	0	MAIN	ST	440	Underground	Streetlighting	Pole	POLE METAL =>25FT	Active	0	90435-67003	S14	CITY OF PAWTUCKET
0012	000	1	MAIN	ST	440	Underground	Streetlighting	Luminaire	LUM HPS RWY 250W	Active	250	90435-67003	S14	CITY OF PAWTUCKET
0013	000	0	MAIN	ST	440	Underground	Streetlighting	Pole	POLE METAL =>25FT	Active	0	90435-67003	S14	CITY OF PAWTUCKET
0013	000	1	MAIN	ST	440	Underground	Streetlighting	Luminaire	LUM HPS RWY 250W	Active	250	90435-67003	S14	CITY OF PAWTUCKET
0014	001	0	MAIN	ST	440	Underground	Streetlighting	Pole	POLE METAL =>25FT	Active	0	90435-67003	S14	CITY OF PAWTUCKET
0014	001	1	MAIN	ST	440	Underground	Streetlighting	Luminaire	LUM HPS RWY 250W	Active	250	90435-67003	S14	CITY OF PAWTUCKET
0016	000	0	MAIN	ST	440	Underground	Streetlighting	Pole	POLE METAL =>25FT	Active	0	90435-67003	S14	CITY OF PAWTUCKET
0016	000	1	MAIN	ST	440	Underground	Streetlighting	Luminaire	LUM HPS RWY 250W	Active	250	90435-67003	S14	CITY OF PAWTUCKET
0016	004	0	MAIN	ST	440	Underground	Streetlighting	Pole	POLE METAL =>25FT	Active	0	90435-67003	S14	CITY OF PAWTUCKET
0016	004	1	MAIN	ST	440	Underground	Streetlighting	Luminaire	LUM HPS RWY 250W	Active	250	90435-67003	S14	CITY OF PAWTUCKET
0056	000	1	MAIN	ST	440	Overhead	Distribution	Luminaire	LUM HPS RWY 250W	Active	250	90435-67003	S14	CITY OF PAWTUCKET
0056	000	3	MAIN	ST	440	Overhead	Distribution	Luminaire	LUM HPS FLD 400W	Active	400	90435-67003	S14	CITY OF PAWTUCKET
0058	000	2	MAIN	ST	440	Overhead	Distribution	Luminaire	LUM HPS FLD 400W	Active	400	53045-82004	S10	PAWTUCKET SCHOOL DEP
0062	000	1	MAIN	ST	440	Overhead	Distribution	Luminaire	LUM HPS RWY 250W	Active	250	90435-67003	S14	CITY OF PAWTUCKET

0064	000	1	MAIN	ST	440	Overhead	Distribution	Luminaire	LUM HPS RWY 250W	Active	250	90435-67003	S14	CITY OF PAWTUCKET
0066	000	1	MAIN	ST	440	Overhead	Distribution	Luminaire	LUM HPS RWY 250W	Active	250	90435-67003	S14	CITY OF PAWTUCKET
0068	000	1	MAIN	ST	440	Overhead	Distribution	Luminaire	LUM HPS RWY 250W	Active	250	90435-67003	S14	CITY OF PAWTUCKET
0070	000	1	MAIN	ST	440	Overhead	Distribution	Luminaire	LUM HPS RWY 250W	Active	250	90435-67003	S14	CITY OF PAWTUCKET
0072	000	1	MAIN	ST	440	Overhead	Distribution	Luminaire	LUM HPS RWY 250W	Active	250	90435-67003	S14	CITY OF PAWTUCKET
0073	000	1	MAIN	ST	440	Overhead	Distribution	Luminaire	LUM HPS RWY 250W	Active	250	90435-67003	S14	CITY OF PAWTUCKET
0075	000	1	MAIN	ST	440	Overhead	Distribution	Luminaire	LUM HPS RWY 250W	Active	250	90435-67003	S14	CITY OF PAWTUCKET
0078	000	1	MAIN	ST	440	Overhead	Distribution	Luminaire	LUM HPS RWY 250W	Active	250	90435-67003	S14	CITY OF PAWTUCKET
0079	000	1	MAIN	ST	440	Overhead	Distribution	Luminaire	LUM HPS RWY 250W	Active	250	90435-67003	S14	CITY OF PAWTUCKET
0080	001	1	MAIN	ST	440	Overhead	Distribution	Luminaire	LUM HPS RWY 250W	Active	250	90435-67003	S14	CITY OF PAWTUCKET
0081	000	1	MAIN	ST	440	Overhead	Distribution	Luminaire	LUM HPS RWY 250W	Active	250	90435-67003	S14	CITY OF PAWTUCKET
0082	000	1	MAIN	ST	440	Overhead	Distribution	Luminaire	LUM HPS RWY 250W	Active	250	90435-67003	S14	CITY OF PAWTUCKET
0083	000	1	MAIN	ST	440	Overhead	Distribution	Luminaire	LUM HPS RWY 250W	Active	250	90435-67003	S14	CITY OF PAWTUCKET
0084	000	1	MAIN	ST	440	Overhead	Distribution	Luminaire	LUM HPS RWY 100W	Active	100	90435-67003	S14	CITY OF PAWTUCKET
0086	000	1	MAIN	ST	440	Overhead	Distribution	Luminaire	LUM HPS RWY 250W	Active	250	90435-67003	S14	CITY OF PAWTUCKET
0089	000	1	MAIN	ST	440	Overhead	Distribution	Luminaire	LUM HPS RWY 100W	Active	100	90435-67003	S14	CITY OF PAWTUCKET
0089	000	2	MAIN	ST	440	Overhead	Distribution	Luminaire	LUM HPS RWY 250W	Active	250	90435-67003	S14	CITY OF PAWTUCKET
0090	000	1	MAIN	ST	440	Overhead	Distribution	Luminaire	LUM HPS RWY 100W	Active	100	90435-67003	S14	CITY OF PAWTUCKET
0091	000	1	MAIN	ST	440	Overhead	Distribution	Luminaire	LUM HPS RWY 100W	Active	100	90435-67003	S14	CITY OF PAWTUCKET
0093	000	1	MAIN	ST	440	Overhead	Distribution	Luminaire	LUM HPS RWY 100W	Active	100	90435-67003	S14	CITY OF PAWTUCKET
0094	000	1	MAIN	ST	440	Overhead	Distribution	Luminaire	LUM HPS RWY 100W	Active	100	90435-67003	S14	CITY OF PAWTUCKET
0095	000	1	MAIN	ST	440	Overhead	Distribution	Luminaire	LUM HPS RWY 100W	Active	100	90435-67003	S14	CITY OF PAWTUCKET
0096	000	1	MAIN	ST	440	Overhead	Distribution	Luminaire	LUM HPS RWY 100W	Active	100	90435-67003	S14	CITY OF PAWTUCKET
0097	000	1	MAIN	ST	440	Overhead	Distribution	Luminaire	LUM HPS RWY 70W	Active	70	90435-67003	S14	CITY OF PAWTUCKET
0098	000	1	MAIN	ST	440	Overhead	Distribution	Luminaire	LUM HPS RWY 100W	Active	100	90435-67003	S14	CITY OF PAWTUCKET
0099	000	1	MAIN	ST	440	Overhead	Distribution	Luminaire	LUM HPS RWY 100W	Active	100	90435-67003	S14	CITY OF PAWTUCKET
0100	000	1	MAIN	ST	440	Overhead	Distribution	Luminaire	LUM HPS RWY 250W	Active	250	90435-67003	S14	CITY OF PAWTUCKET
0102	000	1	MAIN	ST	440	Overhead	Distribution	Luminaire	LUM HPS RWY 250W	Active	250	90435-67003	S14	CITY OF PAWTUCKET
0105	000	1	MAIN	ST	440	Overhead	Distribution	Luminaire	LUM HPS RWY 100W	Active	100	90435-67003	S14	CITY OF PAWTUCKET
0106	000	1	MAIN	ST	440	Overhead	Distribution	Luminaire	LUM HPS RWY 100W	Active	100	90435-67003	S14	CITY OF PAWTUCKET
0109	000	1	MAIN	ST	440	Overhead	Distribution	Luminaire	LUM HPS RWY 250W	Active	250	90435-67003	S14	CITY OF PAWTUCKET
0111	000	0	MAIN	ST	440	Underground	Streetlighting	Pole	POLE METAL =>25FT	Active	0	90435-67003	S14	CITY OF PAWTUCKET
0111	000	1	MAIN	ST	440	Underground	Streetlighting	Luminaire	LUM HPS RWY 250W	Active	250	90435-67003	S14	CITY OF PAWTUCKET
0112	000	0	MAIN	ST	440	Underground	Streetlighting	Pole	POLE METAL =>25FT	Active	0	90435-67003	S14	CITY OF PAWTUCKET
0112	000	1	MAIN	ST	440	Underground	Streetlighting	Luminaire	LUM HPS RWY 250W	Active	250	90435-67003	S14	CITY OF PAWTUCKET
0115	000	1	MAIN	ST	440	Overhead	Distribution	Luminaire	LUM HPS RWY 250W	Active	250	90435-67003	S14	CITY OF PAWTUCKET
0116	000	1	MAIN	ST	440	Overhead	Distribution	Luminaire	LUM HPS RWY 100W	Active	100	90435-67003	S14	CITY OF PAWTUCKET
0118	001	1	MAIN	ST	440	Overhead	Distribution	Luminaire	LUM HPS RWY 250W	Active	250	90435-67003	S14	CITY OF PAWTUCKET
0119	000	1	MAIN	ST	440	Overhead	Distribution	Luminaire	LUM HPS RWY 250W	Active	250	90435-67003	S14	CITY OF PAWTUCKET
0121	000	1	MAIN	ST	440	Overhead	Distribution	Luminaire	LUM HPS RWY 250W	Active	250	90435-67003	S14	CITY OF PAWTUCKET
0122	000	1	MAIN	ST	440	Overhead	Distribution	Luminaire	LUM HPS RWY 250W	Active	250	90435-67003	S14	CITY OF PAWTUCKET
0125	000	1	MAIN	ST	440	Overhead	Distribution	Luminaire	LUM HPS RWY 250W	Active	250	90435-67003	S14	CITY OF PAWTUCKET
0127	000	1	MAIN	ST	440	Overhead	Distribution	Luminaire	LUM HPS RWY 250W	Active	250	90435-67003	S14	CITY OF PAWTUCKET
0128	000	1	MAIN	ST	440	Overhead	Distribution	Luminaire	LUM HPS RWY 250W	Active	250	90435-67003	S14	CITY OF PAWTUCKET
0130	000	1	MAIN	ST	440	Overhead	Distribution	Luminaire	LUM HPS RWY 100W	Active	100	90435-67003	S14	CITY OF PAWTUCKET
0132	000	1	MAIN	ST	440	Overhead	Distribution	Luminaire	LUM HPS RWY 100W	Active	100	90435-67003	S14	CITY OF PAWTUCKET
0135	000	1	MAIN	ST	440	Overhead	Distribution	Luminaire	LUM HPS RWY 100W	Active	100	90435-67003	S14	CITY OF PAWTUCKET
0136	000	1	MAIN	ST	440	Overhead	Distribution	Luminaire	LUM HPS RWY 100W	Active	100	90435-67003	S14	CITY OF PAWTUCKET
0137	001	1	MAIN	ST	440	Overhead	Distribution	Luminaire	LUM HPS RWY 250W	Active	250	90435-67003	S14	CITY OF PAWTUCKET
0140	000	1	MAIN	ST	440	Overhead	Distribution	Luminaire	LUM HPS RWY 250W	Active	250	90435-67003	S14	CITY OF PAWTUCKET
0142	001	1	MAIN	ST	440	Overhead	Distribution	Luminaire	LUM HPS RWY 250W	Active	250	90435-67003	S14	CITY OF PAWTUCKET
0143	000	1	MAIN	ST	440	Overhead	Distribution	Luminaire	LUM HPS RWY 250W	Active	250	90435-67003	S14	CITY OF PAWTUCKET
0146	000	1	MAIN	ST	440	Overhead	Distribution	Luminaire	LUM HPS RWY 250W	Active	250	90435-67003	S14	CITY OF PAWTUCKET
0146	001	1	MAIN	ST	440	Overhead	Distribution	Luminaire	LUM HPS RWY 250W	Active	250	90435-67003	S14	CITY OF PAWTUCKET
0148	000	1	MAIN	ST	440	Overhead	Distribution	Luminaire	LUM HPS RWY 250W	Active	250	90435-67003	S14	CITY OF PAWTUCKET
0150	000	1	MAIN	ST	440	Overhead	Distribution	Luminaire	LUM HPS RWY 250W	Active	250	90435-67003	S14	CITY OF PAWTUCKET
0152	000	1	MAIN	ST	440	Overhead	Distribution	Luminaire	LUM HPS RWY 250W	Active	250	90435-67003	S14	CITY OF PAWTUCKET
0154	000	1	MAIN	ST	440	Overhead	Distribution	Luminaire	LUM HPS RWY 250W	Active	250	90435-67003	S14	CITY OF PAWTUCKET
0154	001	1	MAIN	ST	440	Overhead	Distribution	Luminaire	LUM HPS RWY 250W	Active	250	90435-67003	S14	CITY OF PAWTUCKET
0158	001	1	MAIN	ST	440	Overhead	Distribution	Luminaire	LUM HPS RWY 250W	Active	250	90435-67003	S14	CITY OF PAWTUCKET
0159	000	1	MAIN	ST	440	Overhead	Distribution	Luminaire	LUM HPS RWY 250W	Active	250	90435-67003	S14	CITY OF PAWTUCKET
0160	000	1	MAIN	ST	440	Overhead	Distribution	Luminaire	LUM HPS RWY 250W	Active	250	90435-67003	S14	CITY OF PAWTUCKET
0162	000	1	MAIN	ST	440	Overhead	Distribution	Luminaire	LUM HPS RWY 250W	Active	250	90435-67003	S14	CITY OF PAWTUCKET

0164	001	1	MAIN	ST	440	Overhead	Distribution	Luminaire	LUM HPS RWY 250W	Active	250	90435-67003	S14	CITY OF PAWTUCKET
0165	000	1	MAIN	ST	440	Overhead	Distribution	Luminaire	LUM HPS RWY 250W	Active	250	90435-67003	S14	CITY OF PAWTUCKET
0166	000	1	MAIN	ST	440	Overhead	Distribution	Luminaire	LUM HPS RWY 250W	Active	250	90435-67003	S14	CITY OF PAWTUCKET
0171	000	1	MAIN	ST	440	Overhead	Distribution	Luminaire	LUM HPS RWY 250W	Active	250	90435-67003	S14	CITY OF PAWTUCKET
0173	000	1	MAIN	ST	440	Overhead	Distribution	Luminaire	LUM HPS RWY 250W	Active	250	90435-67003	S14	CITY OF PAWTUCKET
0174	000	1	MAIN	ST	440	Overhead	Distribution	Luminaire	LUM HPS RWY 250W	Active	250	90435-67003	S14	CITY OF PAWTUCKET
0178	000	1	MAIN	ST	440	Overhead	Distribution	Luminaire	LUM HPS RWY 250W	Active	250	90435-67003	S14	CITY OF PAWTUCKET
0180	000	1	MAIN	ST	440	Overhead	Distribution	Luminaire	LUM HPS RWY 250W	Active	250	90435-67003	S14	CITY OF PAWTUCKET
0182	001	1	MAIN	ST	440	Overhead	Distribution	Luminaire	LUM HPS RWY 250W	Active	250	90435-67003	S14	CITY OF PAWTUCKET
0186	000	1	MAIN	ST	440	Overhead	Distribution	Luminaire	LUM HPS RWY 250W	Active	250	90435-67003	S14	CITY OF PAWTUCKET
0188	000	1	MAIN	ST	440	Overhead	Distribution	Luminaire	LUM HPS RWY 250W	Active	250	90435-67003	S14	CITY OF PAWTUCKET
0191	001	1	MAIN	ST	440	Overhead	Distribution	Luminaire	LUM HPS RWY 250W	Active	250	90435-67003	S14	CITY OF PAWTUCKET
0197	000	1	MAIN	ST	440	Overhead	Distribution	Luminaire	LUM HPS RWY 100W	Active	100	90435-67003	S14	CITY OF PAWTUCKET
0202	000	1	MAIN	ST	440	Overhead	Distribution	Luminaire	LUM HPS RWY 100W	Active	100	90435-67003	S14	CITY OF PAWTUCKET
0205	000	1	MAIN	ST	440	Overhead	Distribution	Luminaire	LUM HPS RWY 100W	Active	100	90435-67003	S14	CITY OF PAWTUCKET
0206	000	1	MAIN	ST	440	Overhead	Distribution	Luminaire	LUM HPS RWY 100W	Active	100	90435-67003	S14	CITY OF PAWTUCKET
0211	000	1	MAIN	ST	440	Overhead	Distribution	Luminaire	LUM HPS RWY 100W	Active	100	90435-67003	S14	CITY OF PAWTUCKET
0215	000	2	MAIN	ST	440	Overhead	Distribution	Luminaire	LUM HPS RWY 100W	Active	100	90435-67003	S14	CITY OF PAWTUCKET
0003	000	1	MAKIN	ST	441	Overhead	Distribution	Luminaire	LUM HPS RWY 70W	Active	70	90435-67003	S14	CITY OF PAWTUCKET
0004	000	1	MAKIN	ST	441	Overhead	Distribution	Luminaire	LUM HPS RWY 70W	Active	70	90435-67003	S14	CITY OF PAWTUCKET
0005	000	1	MAKIN	ST	441	Overhead	Distribution	Luminaire	LUM HPS RWY 70W	Active	70	90435-67003	S14	CITY OF PAWTUCKET
0007	000	1	MAKIN	ST	441	Overhead	Distribution	Luminaire	LUM HPS RWY 70W	Active	70	90435-67003	S14	CITY OF PAWTUCKET
0001	000	1	MALVERN	AVE	442	Overhead	Distribution	Luminaire	LUM HPS RWY 100W	Active	100	90435-67003	S14	CITY OF PAWTUCKET
0002	000	1	MALVERN	AVE	442	Overhead	Distribution	Luminaire	LUM HPS RWY 70W	Active	70	90435-67003	S14	CITY OF PAWTUCKET
0004	000	1	MALVERN	AVE	442	Overhead	Distribution	Luminaire	LUM HPS RWY 70W	Active	70	90435-67003	S14	CITY OF PAWTUCKET
0007	000	1	MALVERN	AVE	442	Overhead	Distribution	Luminaire	LUM HPS RWY 70W	Active	70	90435-67003	S14	CITY OF PAWTUCKET
0003	000	1	MANCHESTER	ST	443	Overhead	Distribution	Luminaire	LUM HPS RWY 70W	Active	70	90435-67003	S14	CITY OF PAWTUCKET
0004	000	1	MANCHESTER	ST	443	Overhead	Distribution	Luminaire	LUM HPS RWY 70W	Active	70	90435-67003	S14	CITY OF PAWTUCKET
0005	000	1	MANCHESTER	ST	443	Overhead	Distribution	Luminaire	LUM HPS RWY 70W	Active	70	90435-67003	S14	CITY OF PAWTUCKET
0007	000	1	MANCHESTER	ST	443	Overhead	Distribution	Luminaire	LUM HPS RWY 100W	Active	100	90435-67003	S14	CITY OF PAWTUCKET
0007	000	2	MANCHESTER	ST	443	Overhead	Distribution	Luminaire	LUM HPS FLD 400W	Active	400	90435-67003	S14	CITY OF PAWTUCKET
0003	000	1	MANISTEE	ST	444	Overhead	Distribution	Luminaire	LUM HPS RWY 70W	Active	70	90435-67003	S14	CITY OF PAWTUCKET
0005	000	1	MANISTEE	ST	444	Overhead	Distribution	Luminaire	LUM HPS RWY 70W	Active	70	90435-67003	S14	CITY OF PAWTUCKET
0010	000	1	MANISTEE	ST	444	Overhead	Distribution	Luminaire	LUM HPS RWY 70W	Active	70	90435-67003	S14	CITY OF PAWTUCKET
0001	000	1	MANNING	ST	445	Overhead	Distribution	Luminaire	LUM HPS RWY 70W	Active	70	90435-67003	S14	CITY OF PAWTUCKET
0003	000	1	MANNING	ST	445	Overhead	Distribution	Luminaire	LUM HPS RWY 70W	Active	70	90435-67003	S14	CITY OF PAWTUCKET
0001	000	1	MANTON	ST	446	Overhead	Distribution	Luminaire	LUM HPS RWY 100W	Active	100	90435-67003	S14	CITY OF PAWTUCKET
0002	000	1	MANTON	ST	446	Overhead	Distribution	Luminaire	LUM HPS RWY 100W	Active	100	90435-67003	S14	CITY OF PAWTUCKET
0003	000	1	MANTON	ST	446	Overhead	Distribution	Luminaire	LUM HPS RWY 100W	Active	100	90435-67003	S14	CITY OF PAWTUCKET
0005	000	1	MANTON	ST	446	Overhead	Distribution	Luminaire	LUM HPS RWY 100W	Active	100	90435-67003	S14	CITY OF PAWTUCKET
0007	000	1	MANTON	ST	446	Overhead	Distribution	Luminaire	LUM HPS RWY 100W	Active	100	90435-67003	S14	CITY OF PAWTUCKET
0009	000	1	MANTON	ST	446	Overhead	Distribution	Luminaire	LUM HPS RWY 100W	Active	100	90435-67003	S14	CITY OF PAWTUCKET
0011	000	1	MANTON	ST	446	Overhead	Distribution	Luminaire	LUM HPS RWY 100W	Active	100	90435-67003	S14	CITY OF PAWTUCKET
0013	000	1	MANTON	ST	446	Overhead	Distribution	Luminaire	LUM HPS RWY 100W	Active	100	90435-67003	S14	CITY OF PAWTUCKET
0014	000	1	MANTON	ST	446	Overhead	Distribution	Luminaire	LUM HPS RWY 100W	Active	100	90435-67003	S14	CITY OF PAWTUCKET
0015	000	1	MANTON	ST	446	Overhead	Distribution	Luminaire	LUM HPS RWY 100W	Active	100	90435-67003	S14	CITY OF PAWTUCKET
0016	000	1	MANTON	ST	446	Overhead	Distribution	Luminaire	LUM HPS RWY 100W	Active	100	90435-67003	S14	CITY OF PAWTUCKET
0017	000	1	MANTON	ST	446	Overhead	Distribution	Luminaire	LUM HPS RWY 100W	Active	100	90435-67003	S14	CITY OF PAWTUCKET
0020	000	1	MANTON	ST	446	Overhead	Distribution	Luminaire	LUM HPS RWY 100W	Active	100	90435-67003	S14	CITY OF PAWTUCKET
0022	000	1	MANTON	ST	446	Overhead	Distribution	Luminaire	LUM HPS RWY 100W	Active	100	90435-67003	S14	CITY OF PAWTUCKET
0024	000	1	MANTON	ST	446	Overhead	Distribution	Luminaire	LUM HPS RWY 70W	Active	70	90435-67003	S14	CITY OF PAWTUCKET
0002	000	1	MANUEL	ST	447	Overhead	Distribution	Luminaire	LUM HPS RWY 70W	Active	70	90435-67003	S14	CITY OF PAWTUCKET
0002	000	1	MAPLE	ST	448	Overhead	Distribution	Luminaire	LUM HPS RWY 100W	Active	100	90435-67003	S14	CITY OF PAWTUCKET
0003	000	1	MAPLE	ST	448	Overhead	Distribution	Luminaire	LUM HPS RWY 100W	Active	100	90435-67003	S14	CITY OF PAWTUCKET
0002	000	1	MAPLE CREST	DR	449	Overhead	Distribution	Luminaire	LUM HPS RWY 70W	Active	70	90435-67003	S14	CITY OF PAWTUCKET
0004	000	1	MAPLE CREST	DR	449	Overhead	Distribution	Luminaire	LUM HPS RWY 70W	Active	70	90435-67003	S14	CITY OF PAWTUCKET
0006	000	1	MAPLE CREST	DR	449	Overhead	Distribution	Luminaire	LUM HPS RWY 70W	Active	70	90435-67003	S14	CITY OF PAWTUCKET
0008	000	1	MAPLE CREST	DR	449	Overhead	Distribution	Luminaire	LUM HPS RWY 70W	Active	70	90435-67003	S14	CITY OF PAWTUCKET
0010	000	1	MAPLE CREST	DR	449	Overhead	Distribution	Luminaire	LUM HPS RWY 70W	Active	70	90435-67003	S14	CITY OF PAWTUCKET
0011	000	1	MAPLE CREST	DR	449	Overhead	Distribution	Luminaire	LUM HPS RWY 70W	Active	70	90435-67003	S14	CITY OF PAWTUCKET
0012	000	1	MAPLE CREST	DR	449	Overhead	Distribution	Luminaire	LUM HPS RWY 70W	Active	70	90435-67003	S14	CITY OF PAWTUCKET
0014	000	1	MAPLE CREST	DR	449	Overhead	Distribution	Luminaire	LUM HPS RWY 70W	Active	70	90435-67003	S14	CITY OF PAWTUCKET
0016	000	1	MAPLE CREST	DR	449	Overhead	Distribution	Luminaire	LUM HPS RWY 70W	Active	70	90435-67003	S14	CITY OF PAWTUCKET

0018	000	1	MAPLE CREST	DR	449	Overhead	Distribution	Luminaire	LUM HPS RWY 70W	Active	70	90435-67003	S14	CITY OF PAWTUCKET
0021	000	1	MAPLE CREST	DR	449	Overhead	Distribution	Luminaire	LUM HPS RWY 70W	Active	70	90435-67003	S14	CITY OF PAWTUCKET
0022	000	1	MAPLE CREST	DR	449	Overhead	Distribution	Luminaire	LUM HPS RWY 70W	Active	70	90435-67003	S14	CITY OF PAWTUCKET
0001	000	1	MAPLEWOOD	DR	450	Overhead	Distribution	Luminaire	LUM HPS RWY 70W	Active	70	90435-67003	S14	CITY OF PAWTUCKET
0004	000	1	MAPLEWOOD	DR	450	Overhead	Distribution	Luminaire	LUM HPS RWY 70W	Active	70	90435-67003	S14	CITY OF PAWTUCKET
0005	000	1	MAPLEWOOD	DR	450	Overhead	Distribution	Luminaire	LUM HPS RWY 70W	Active	70	90435-67003	S14	CITY OF PAWTUCKET
0001	000	1	MARBURY	AVE	451	Overhead	Distribution	Luminaire	LUM HPS RWY 70W	Active	70	90435-67003	S14	CITY OF PAWTUCKET
0003	000	1	MARBURY	AVE	451	Overhead	Distribution	Luminaire	LUM HPS RWY 70W	Active	70	90435-67003	S14	CITY OF PAWTUCKET
0005	000	1	MARBURY	AVE	451	Overhead	Distribution	Luminaire	LUM HPS RWY 70W	Active	70	90435-67003	S14	CITY OF PAWTUCKET
0006	000	1	MARBURY	AVE	451	Overhead	Distribution	Luminaire	LUM HPS RWY 70W	Active	70	90435-67003	S14	CITY OF PAWTUCKET
0008	000	1	MARBURY	AVE	451	Overhead	Distribution	Luminaire	LUM HPS RWY 70W	Active	70	90435-67003	S14	CITY OF PAWTUCKET
0010	000	1	MARBURY	AVE	451	Overhead	Distribution	Luminaire	LUM HPS RWY 70W	Active	70	90435-67003	S14	CITY OF PAWTUCKET
0011	000	1	MARBURY	AVE	451	Overhead	Distribution	Luminaire	LUM HPS RWY 70W	Active	70	90435-67003	S14	CITY OF PAWTUCKET
0012	000	1	MARBURY	AVE	451	Overhead	Distribution	Luminaire	LUM HPS RWY 70W	Active	70	90435-67003	S14	CITY OF PAWTUCKET
0002	000	1	MARCONI	ST	452	Overhead	Distribution	Luminaire	LUM HPS RWY 70W	Active	70	90435-67003	S14	CITY OF PAWTUCKET
0003	000	1	MARCONI	ST	452	Overhead	Distribution	Luminaire	LUM HPS FLD 250W	Active	250	3371-64002	S14	CITY OF PAWTUCKET
0004	000	1	MARCONI	ST	452	Overhead	Distribution	Luminaire	LUM HPS RWY 70W	Active	70	90435-67003	S14	CITY OF PAWTUCKET
0001	000	1	MARGARET	ST	453	Overhead	Distribution	Luminaire	LUM HPS RWY 70W	Active	70	90435-67003	S14	CITY OF PAWTUCKET
0002	000	1	MARGARET	ST	453	Overhead	Distribution	Luminaire	LUM HPS RWY 70W	Active	70	90435-67003	S14	CITY OF PAWTUCKET
0004	000	1	MARGARET	ST	453	Overhead	Distribution	Luminaire	LUM HPS RWY 70W	Active	70	90435-67003	S14	CITY OF PAWTUCKET
0006	000	1	MARGARET	ST	453	Overhead	Distribution	Luminaire	LUM HPS RWY 70W	Active	70	90435-67003	S14	CITY OF PAWTUCKET
0008	000	1	MARGARET	ST	453	Overhead	Distribution	Luminaire	LUM HPS RWY 70W	Active	70	90435-67003	S14	CITY OF PAWTUCKET
0001	000	1	MARION	TER	454	Overhead	Distribution	Luminaire	LUM HPS RWY 70W	Active	70	90435-67003	S14	CITY OF PAWTUCKET
0002	000	1	MARTHA	ST	455	Overhead	Distribution	Luminaire	LUM HPS RWY 70W	Active	70	90435-67003	S14	CITY OF PAWTUCKET
0004	000	1	MARTHA	ST	455	Overhead	Distribution	Luminaire	LUM HPS RWY 70W	Active	70	90435-67003	S14	CITY OF PAWTUCKET
0006	000	1	MARTHA	ST	455	Overhead	Distribution	Luminaire	LUM HPS RWY 70W	Active	70	90435-67003	S14	CITY OF PAWTUCKET
0008	000	1	MARTHA	ST	455	Overhead	Distribution	Luminaire	LUM HPS RWY 70W	Active	70	90435-67003	S14	CITY OF PAWTUCKET
0010	000	1	MARTHA	ST	455	Overhead	Distribution	Luminaire	LUM HPS RWY 70W	Active	70	90435-67003	S14	CITY OF PAWTUCKET
0001	000	1	MARTIN	ST	457	Overhead	Distribution	Luminaire	LUM HPS RWY 70W	Active	70	90435-67003	S14	CITY OF PAWTUCKET
0002	000	1	MARTIN	CT	456	Overhead	Distribution	Luminaire	LUM HPS RWY 70W	Active	70	90435-67003	S14	CITY OF PAWTUCKET
0003	000	1	MARTIN	ST	457	Overhead	Distribution	Luminaire	LUM HPS RWY 70W	Active	70	90435-67003	S14	CITY OF PAWTUCKET
0004	000	1	MARTIN	ST	457	Overhead	Distribution	Luminaire	LUM HPS RWY 70W	Active	70	90435-67003	S14	CITY OF PAWTUCKET
0006	000	1	MARTIN	ST	457	Overhead	Distribution	Luminaire	LUM HPS RWY 70W	Active	70	90435-67003	S14	CITY OF PAWTUCKET
0008	000	1	MARTIN	ST	457	Overhead	Distribution	Luminaire	LUM HPS RWY 70W	Active	70	90435-67003	S14	CITY OF PAWTUCKET
0002	000	1	MARY	ST	458	Overhead	Distribution	Luminaire	LUM HPS RWY 70W	Active	70	90435-67003	S14	CITY OF PAWTUCKET
0003	000	1	MARY	ST	458	Overhead	Distribution	Luminaire	LUM HPS RWY 70W	Active	70	90435-67003	S14	CITY OF PAWTUCKET
0004	000	1	MARY	ST	458	Overhead	Distribution	Luminaire	LUM HPS RWY 70W	Active	70	90435-67003	S14	CITY OF PAWTUCKET
0003	000	1	MARYLAND	AVE	459	Overhead	Distribution	Luminaire	LUM HPS RWY 70W	Active	70	90435-67003	S14	CITY OF PAWTUCKET
0005	000	1	MARYLAND	AVE	459	Overhead	Distribution	Luminaire	LUM HPS RWY 70W	Active	70	90435-67003	S14	CITY OF PAWTUCKET
0007	000	1	MARYLAND	AVE	459	Overhead	Distribution	Luminaire	LUM HPS RWY 70W	Active	70	90435-67003	S14	CITY OF PAWTUCKET
0009	000	1	MARYLAND	AVE	459	Overhead	Distribution	Luminaire	LUM HPS RWY 70W	Active	70	90435-67003	S14	CITY OF PAWTUCKET
0002	000	1	MASON	ST	460	Overhead	Distribution	Luminaire	LUM HPS RWY 250W	Active	250	90435-67003	S14	CITY OF PAWTUCKET
0006	000	1	MASON	ST	460	Overhead	Distribution	Luminaire	LUM MV RWY 400W	Active	400	90435-67003	S14	CITY OF PAWTUCKET
0003	000	1	MASON ST PRKN	LOOP	768	Underground	Streetlighting	Luminaire	LUM MV FLD 400W-TW	Active	400	90435-67003	S14	CITY OF PAWTUCKET
0003	000	2	MASON ST PRKN	LOOP	768	Underground	Streetlighting	Luminaire	LUM MV RWY 400W	Active	400	90435-67003	S14	CITY OF PAWTUCKET
0004	000	0	MASON ST PRKN	LOOP	768	Underground	Streetlighting	Pole	POLE METAL =>25FT	Active	0	90435-67003	S14	CITY OF PAWTUCKET
0004	000	1	MASON ST PRKN	LOOP	768	Underground	Streetlighting	Luminaire	LUM MV RWY 400W	Active	400	90435-67003	S14	CITY OF PAWTUCKET
0004	000	2	MASON ST PRKN	LOOP	768	Underground	Streetlighting	Luminaire	LUM MV FLD 400W-TW	Active	400	90435-67003	S14	CITY OF PAWTUCKET
0001	000	1	MASSASOIT	AVE	461	Overhead	Distribution	Luminaire	LUM HPS RWY 70W	Active	70	90435-67003	S14	CITY OF PAWTUCKET
0002	000	1	MASSASOIT	AVE	461	Overhead	Distribution	Luminaire	LUM HPS RWY 50W	Active	50	90435-67003	S14	CITY OF PAWTUCKET
0002	000	1	MAVIS	ST	462	Overhead	Distribution	Luminaire	LUM HPS RWY 70W	Active	70	90435-67003	S14	CITY OF PAWTUCKET
0004	000	1	MAVIS	ST	462	Overhead	Distribution	Luminaire	LUM HPS RWY 70W	Active	70	90435-67003	S14	CITY OF PAWTUCKET
0001	000	1	MAY	ST	463	Overhead	Distribution	Luminaire	LUM HPS RWY 70W	Active	70	90435-67003	S14	CITY OF PAWTUCKET
0003	000	1	MAYFIELD	ST	464	Overhead	Distribution	Luminaire	LUM HPS RWY 70W	Active	70	90435-67003	S14	CITY OF PAWTUCKET
0006	000	1	MAYFIELD	ST	464	Overhead	Distribution	Luminaire	LUM HPS RWY 70W	Active	70	90435-67003	S14	CITY OF PAWTUCKET
0001	000	1	MAYNARD	ST	465	Overhead	Distribution	Luminaire	LUM HPS RWY 70W	Active	70	90435-67003	S14	CITY OF PAWTUCKET
0002	000	1	MAYNARD	ST	465	Overhead	Distribution	Luminaire	LUM HPS RWY 70W	Active	70	90435-67003	S14	CITY OF PAWTUCKET
0003	000	1	MAYNARD	ST	465	Overhead	Distribution	Luminaire	LUM HPS RWY 70W	Active	70	90435-67003	S14	CITY OF PAWTUCKET
0004	000	1	MAYNARD	ST	465	Overhead	Distribution	Luminaire	LUM HPS RWY 100W	Active	100	90435-67003	S14	CITY OF PAWTUCKET
0005	000	1	MAYNARD	ST	465	Overhead	Distribution	Luminaire	LUM HPS RWY 100W	Active	100	90435-67003	S14	CITY OF PAWTUCKET
0006	000	1	MAYNARD	ST	465	Overhead	Distribution	Luminaire	LUM HPS RWY 70W	Active	70	90435-67003	S14	CITY OF PAWTUCKET
0007	000	1	MAYNARD	ST	465	Overhead	Distribution	Luminaire	LUM HPS RWY 70W	Active	70	90435-67003	S14	CITY OF PAWTUCKET
0008	000	1	MAYNARD	ST	465	Overhead	Distribution	Luminaire	LUM HPS RWY 100W	Active	100	90435-67003	S14	CITY OF PAWTUCKET

0009	000	1	MAYNARD	ST	465	Overhead	Distribution	Luminaire	LUM HPS RWY 70W	Active	70	90435-67003	S14	CITY OF PAWTUCKET
0010	000	1	MAYNARD	ST	465	Overhead	Distribution	Luminaire	LUM HPS RWY 70W	Active	70	90435-67003	S14	CITY OF PAWTUCKET
0011	000	1	MAYNARD	ST	465	Overhead	Distribution	Luminaire	LUM HPS RWY 70W	Active	70	90435-67003	S14	CITY OF PAWTUCKET
0002	000	1	MCALOON	ST	466	Overhead	Distribution	Luminaire	LUM HPS RWY 70W	Active	70	90435-67003	S14	CITY OF PAWTUCKET
0004	000	1	MCALOON	ST	466	Overhead	Distribution	Luminaire	LUM HPS RWY 70W	Active	70	90435-67003	S14	CITY OF PAWTUCKET
0006	000	1	MCALOON	ST	466	Overhead	Distribution	Luminaire	LUM HPS RWY 70W	Active	70	90435-67003	S14	CITY OF PAWTUCKET
0007	000	1	MCALOON	ST	466	Overhead	Distribution	Luminaire	LUM HPS RWY 100W	Active	100	90435-67003	S14	CITY OF PAWTUCKET
0008	000	1	MCALOON	ST	466	Overhead	Distribution	Luminaire	LUM HPS RWY 70W	Active	70	90435-67003	S14	CITY OF PAWTUCKET
0002	000	1	MCCABE	AVE	467	Overhead	Distribution	Luminaire	LUM HPS RWY 70W	Active	70	90435-67003	S14	CITY OF PAWTUCKET
0004	000	1	MCCABE	AVE	467	Overhead	Distribution	Luminaire	LUM HPS RWY 70W	Active	70	90435-67003	S14	CITY OF PAWTUCKET
0006	000	1	MCCABE	AVE	467	Overhead	Distribution	Luminaire	LUM HPS RWY 70W	Active	70	90435-67003	S14	CITY OF PAWTUCKET
0008	000	1	MCCABE	AVE	467	Overhead	Distribution	Luminaire	LUM HPS RWY 70W	Active	70	90435-67003	S14	CITY OF PAWTUCKET
0001	000	1	MCCALLUM	AVE	468	Overhead	Distribution	Luminaire	LUM HPS RWY 70W	Active	70	90435-67003	S14	CITY OF PAWTUCKET
0002	000	1	MCCUSKER	CT	469	Overhead	Distribution	Luminaire	LUM HPS RWY 70W	Active	70	90435-67003	S14	CITY OF PAWTUCKET
0002	000	1	MEADOW	ST	471	Overhead	Distribution	Luminaire	LUM HPS RWY 100W	Active	100	90435-67003	S14	CITY OF PAWTUCKET
0004	000	1	MEADOW	ST	471	Overhead	Distribution	Luminaire	LUM HPS RWY 70W	Active	70	90435-67003	S14	CITY OF PAWTUCKET
0006	000	1	MEADOW	ST	471	Overhead	Distribution	Luminaire	LUM HPS RWY 70W	Active	70	90435-67003	S14	CITY OF PAWTUCKET
0008	000	1	MEADOW	ST	471	Overhead	Distribution	Luminaire	LUM HPS RWY 70W	Active	70	90435-67003	S14	CITY OF PAWTUCKET
0010	000	1	MEADOW	ST	471	Overhead	Distribution	Luminaire	LUM HPS RWY 70W	Active	70	90435-67003	S14	CITY OF PAWTUCKET
0013	000	1	MEADOW	ST	471	Overhead	Distribution	Luminaire	LUM HPS RWY 70W	Active	70	90435-67003	S14	CITY OF PAWTUCKET
0021	000	1	MEADOW	ST	471	Overhead	Distribution	Luminaire	LUM HPS RWY 100W	Active	100	90435-67003	S14	CITY OF PAWTUCKET
0002	000	1	MELROSE	AVE	472	Overhead	Distribution	Luminaire	LUM HPS RWY 70W	Active	70	90435-67003	S14	CITY OF PAWTUCKET
0004	000	1	MELROSE	AVE	472	Overhead	Distribution	Luminaire	LUM HPS RWY 70W	Active	70	90435-67003	S14	CITY OF PAWTUCKET
0006	000	1	MELROSE	AVE	472	Overhead	Distribution	Luminaire	LUM HPS RWY 70W	Active	70	90435-67003	S14	CITY OF PAWTUCKET
0001	000	1	MELTON	ST	473	Overhead	Distribution	Luminaire	LUM HPS RWY 70W	Active	70	90435-67003	S14	CITY OF PAWTUCKET
0003	000	1	MELTON	ST	473	Overhead	Distribution	Luminaire	LUM HPS RWY 70W	Active	70	90435-67003	S14	CITY OF PAWTUCKET
0002	000	1	MEMORIAL	DR	474	Overhead	Distribution	Luminaire	LUM HPS RWY 70W	Active	70	90435-67003	S14	CITY OF PAWTUCKET
0003	000	1	MEMORIAL	DR	474	Overhead	Distribution	Luminaire	LUM HPS RWY 70W	Active	70	90435-67003	S14	CITY OF PAWTUCKET
0004	000	1	MEMORIAL	DR	474	Overhead	Distribution	Luminaire	LUM HPS RWY 70W	Active	70	90435-67003	S14	CITY OF PAWTUCKET
0005	000	1	MEMORIAL	DR	474	Overhead	Distribution	Luminaire	LUM HPS RWY 70W	Active	70	90435-67003	S14	CITY OF PAWTUCKET
0006	000	1	MEMORIAL	DR	474	Overhead	Distribution	Luminaire	LUM HPS RWY 70W	Active	70	90435-67003	S14	CITY OF PAWTUCKET
0007	000	1	MEMORIAL	DR	474	Overhead	Distribution	Luminaire	LUM HPS RWY 100W	Active	100	90435-67003	S14	CITY OF PAWTUCKET
0008	000	1	MEMORIAL	DR	474	Overhead	Distribution	Luminaire	LUM HPS RWY 70W	Active	70	90435-67003	S14	CITY OF PAWTUCKET
0010	000	1	MEMORIAL	DR	474	Overhead	Distribution	Luminaire	LUM HPS RWY 70W	Active	70	90435-67003	S14	CITY OF PAWTUCKET
0011	000	1	MEMORIAL	DR	474	Overhead	Distribution	Luminaire	LUM HPS FLD 250W	Active	250	3371-64002	S14	CITY OF PAWTUCKET
0013	000	1	MEMORIAL	DR	474	Overhead	Distribution	Luminaire	LUM HPS RWY 70W	Active	70	90435-67003	S14	CITY OF PAWTUCKET
0015	000	1	MEMORIAL	DR	474	Overhead	Distribution	Luminaire	LUM HPS RWY 70W	Active	70	90435-67003	S14	CITY OF PAWTUCKET
0017	000	1	MEMORIAL	DR	474	Overhead	Distribution	Luminaire	LUM HPS RWY 70W	Active	70	90435-67003	S14	CITY OF PAWTUCKET
0002	000	1	MENDON	AVE	475	Overhead	Distribution	Luminaire	LUM HPS RWY 100W	Active	100	90435-67003	S14	CITY OF PAWTUCKET
0006	000	1	MENDON	AVE	475	Overhead	Distribution	Luminaire	LUM HPS RWY 70W	Active	70	90435-67003	S14	CITY OF PAWTUCKET
0008	000	1	MENDON	AVE	475	Overhead	Distribution	Luminaire	LUM HPS RWY 100W	Active	100	90435-67003	S14	CITY OF PAWTUCKET
0009	000	1	MENDON	AVE	475	Overhead	Distribution	Luminaire	LUM HPS RWY 100W	Active	100	90435-67003	S14	CITY OF PAWTUCKET
0011	000	1	MENDON	AVE	475	Overhead	Distribution	Luminaire	LUM HPS RWY 100W	Active	100	90435-67003	S14	CITY OF PAWTUCKET
0012	001	1	MENDON	AVE	475	Overhead	Distribution	Luminaire	LUM HPS RWY 100W	Active	100	90435-67003	S14	CITY OF PAWTUCKET
0013	001	1	MENDON	AVE	475	Overhead	Distribution	Luminaire	LUM HPS RWY 100W	Active	100	90435-67003	S14	CITY OF PAWTUCKET
0014	000	1	MENDON	AVE	475	Overhead	Distribution	Luminaire	LUM HPS RWY 100W	Active	100	90435-67003	S14	CITY OF PAWTUCKET
0016	000	1	MENDON	AVE	475	Overhead	Distribution	Luminaire	LUM HPS RWY 100W	Active	100	90435-67003	S14	CITY OF PAWTUCKET
0020	000	1	MENDON	AVE	475	Overhead	Distribution	Luminaire	LUM HPS RWY 70W	Active	70	90435-67003	S14	CITY OF PAWTUCKET
0022	000	1	MENDON	AVE	475	Overhead	Distribution	Luminaire	LUM HPS RWY 70W	Active	70	90435-67003	S14	CITY OF PAWTUCKET
0025	000	1	MENDON	AVE	475	Overhead	Distribution	Luminaire	LUM HPS RWY 70W	Active	70	90435-67003	S14	CITY OF PAWTUCKET
0029	000	1	MENDON	AVE	475	Overhead	Distribution	Luminaire	LUM HPS FLD 250W	Active	250	28129-70006	S14	PAWTUCKET SCH DEPT
0029	000	2	MENDON	AVE	475	Overhead	Distribution	Luminaire	LUM HPS RWY 70W	Active	70	90435-67003	S14	CITY OF PAWTUCKET
0031	000	1	MENDON	AVE	475	Overhead	Distribution	Luminaire	LUM HPS RWY 100W	Active	100	90435-67003	S14	CITY OF PAWTUCKET
0033	000	1	MENDON	AVE	475	Overhead	Distribution	Luminaire	LUM HPS RWY 70W	Active	70	90435-67003	S14	CITY OF PAWTUCKET
0038	000	1	MENDON	AVE	475	Overhead	Distribution	Luminaire	LUM HPS RWY 70W	Active	70	90435-67003	S14	CITY OF PAWTUCKET
0040	000	1	MENDON	AVE	475	Overhead	Distribution	Luminaire	LUM HPS RWY 70W	Active	70	90435-67003	S14	CITY OF PAWTUCKET
0041	000	1	MENDON	AVE	475	Overhead	Distribution	Luminaire	LUM HPS RWY 100W	Active	100	90435-67003	S14	CITY OF PAWTUCKET
0042	000	1	MENDON	AVE	475	Overhead	Distribution	Luminaire	LUM HPS RWY 100W	Active	100	90435-67003	S14	CITY OF PAWTUCKET
0044	000	1	MENDON	AVE	475	Overhead	Distribution	Luminaire	LUM HPS RWY 250W	Active	250	90435-67003	S14	CITY OF PAWTUCKET
0046	000	1	MENDON	AVE	475	Overhead	Distribution	Luminaire	LUM HPS RWY 100W	Active	100	90435-67003	S14	CITY OF PAWTUCKET
0048	000	1	MENDON	AVE	475	Overhead	Distribution	Luminaire	LUM HPS RWY 100W	Active	100	90435-67003	S14	CITY OF PAWTUCKET
0049	000	1	MENDON	AVE	475	Overhead	Distribution	Luminaire	LUM HPS RWY 70W	Active	70	90435-67003	S14	CITY OF PAWTUCKET
0050	000	1	MENDON	AVE	475	Overhead	Distribution	Luminaire	LUM HPS RWY 100W	Active	100	90435-67003	S14	CITY OF PAWTUCKET

0052	000	1	MENDON	AVE	475	Overhead	Distribution	Luminaire	LUM HPS RWY 70W	Active	70	90435-67003	S14	CITY OF PAWTUCKET
0054	000	1	MENDON	AVE	475	Overhead	Distribution	Luminaire	LUM HPS RWY 70W	Active	70	90435-67003	S14	CITY OF PAWTUCKET
0002	000	1	MERRICK	ST	476	Overhead	Distribution	Luminaire	LUM HPS RWY 70W	Active	70	90435-67003	S14	CITY OF PAWTUCKET
0004	000	1	MERRICK	ST	476	Overhead	Distribution	Luminaire	LUM HPS RWY 70W	Active	70	90435-67003	S14	CITY OF PAWTUCKET
0006	000	1	MERRICK	ST	476	Overhead	Distribution	Luminaire	LUM HPS RWY 70W	Active	70	90435-67003	S14	CITY OF PAWTUCKET
0005	000	1	MERRY	ST	477	Overhead	Distribution	Luminaire	LUM HPS RWY 70W	Active	70	90435-67003	S14	CITY OF PAWTUCKET
0007	000	1	MERRY	ST	477	Overhead	Distribution	Luminaire	LUM HPS RWY 70W	Active	70	90435-67003	S14	CITY OF PAWTUCKET
0001	000	1	MIDDLE	ST	479	Overhead	Distribution	Luminaire	LUM HPS RWY 70W	Active	70	90435-67003	S14	CITY OF PAWTUCKET
0002	000	1	MIDDLE	ST	479	Overhead	Distribution	Luminaire	LUM HPS RWY 70W	Active	70	90435-67003	S14	CITY OF PAWTUCKET
0003	000	1	MIDDLE	ST	479	Overhead	Distribution	Luminaire	LUM HPS RWY 70W	Active	70	90435-67003	S14	CITY OF PAWTUCKET
0004	000	1	MIDDLE	ST	479	Overhead	Distribution	Luminaire	LUM HPS RWY 70W	Active	70	90435-67003	S14	CITY OF PAWTUCKET
0005	000	1	MIDDLE	ST	479	Overhead	Distribution	Luminaire	LUM HPS RWY 70W	Active	70	90435-67003	S14	CITY OF PAWTUCKET
0010	000	1	MIDDLE	ST	479	Overhead	Distribution	Luminaire	LUM HPS RWY 70W	Active	70	90435-67003	S14	CITY OF PAWTUCKET
0011	000	1	MIDDLE	ST	479	Overhead	Distribution	Luminaire	LUM HPS RWY 70W	Active	70	90435-67003	S14	CITY OF PAWTUCKET
0012	000	1	MIDDLE	ST	479	Overhead	Distribution	Luminaire	LUM HPS RWY 70W	Active	70	90435-67003	S14	CITY OF PAWTUCKET
0013	000	1	MIDDLE	ST	479	Overhead	Distribution	Luminaire	LUM HPS RWY 70W	Active	70	90435-67003	S14	CITY OF PAWTUCKET
0015	000	1	MIDDLE	ST	479	Overhead	Distribution	Luminaire	LUM HPS RWY 250W	Active	250	90435-67003	S14	CITY OF PAWTUCKET
0016	000	1	MIDDLE	ST	479	Overhead	Distribution	Luminaire	LUM HPS RWY 70W	Active	70	90435-67003	S14	CITY OF PAWTUCKET
0018	000	1	MIDDLE	ST	479	Overhead	Distribution	Luminaire	LUM HPS RWY 70W	Active	70	90435-67003	S14	CITY OF PAWTUCKET
0020	000	1	MIDDLE	ST	479	Overhead	Distribution	Luminaire	LUM HPS RWY 50W	Active	50	90435-67003	S14	CITY OF PAWTUCKET
0025	000	1	MIDDLE	ST	479	Overhead	Distribution	Luminaire	LUM HPS RWY 70W	Active	70	90435-67003	S14	CITY OF PAWTUCKET
0028	000	1	MIDDLE	ST	479	Overhead	Distribution	Luminaire	LUM HPS RWY 70W	Active	70	90435-67003	S14	CITY OF PAWTUCKET
0030	000	1	MIDDLE	ST	479	Overhead	Distribution	Luminaire	LUM HPS RWY 70W	Active	70	90435-67003	S14	CITY OF PAWTUCKET
0033	000	1	MIDDLE	ST	479	Overhead	Distribution	Luminaire	LUM HPS RWY 70W	Active	70	90435-67003	S14	CITY OF PAWTUCKET
0035	000	1	MIDDLE	ST	479	Overhead	Distribution	Luminaire	LUM HPS RWY 250W	Active	250	90435-67003	S14	CITY OF PAWTUCKET
0038	000	1	MIDDLE	ST	479	Overhead	Distribution	Luminaire	LUM HPS RWY 70W	Active	70	90435-67003	S14	CITY OF PAWTUCKET
0001	000	1	MIDWAY	AVE	480	Overhead	Distribution	Luminaire	LUM HPS RWY 70W	Active	70	90435-67003	S14	CITY OF PAWTUCKET
0002	000	1	MILES	AVE	481	Overhead	Distribution	Luminaire	LUM HPS RWY 70W	Active	70	90435-67003	S14	CITY OF PAWTUCKET
0001	000	1	MILL	ST	482	Overhead	Distribution	Luminaire	LUM HPS RWY 100W	Active	100	90435-67003	S14	CITY OF PAWTUCKET
0007	000	1	MILL	ST	482	Overhead	Distribution	Luminaire	LUM HPS RWY 70W	Active	70	90435-67003	S14	CITY OF PAWTUCKET
0001	001	1	MILLER	ST	483	Overhead	Distribution	Luminaire	LUM HPS RWY 70W	Active	70	90435-67003	S14	CITY OF PAWTUCKET
0001	000	1	MINERAL SPRING	AVE	484	Overhead	Distribution	Luminaire	LUM HPS RWY 100W	Active	100	90435-67003	S14	CITY OF PAWTUCKET
0002	000	1	MINERAL SPRING	AVE	484	Overhead	Distribution	Luminaire	LUM HPS RWY 100W	Active	100	90435-67003	S14	CITY OF PAWTUCKET
0002	000	2	MINERAL SPRING	AVE	484	Overhead	Distribution	Luminaire	LUM HPS FLD 250W	Active	250	90435-67003	S14	CITY OF PAWTUCKET
0003	000	1	MINERAL SPRING	AVE	484	Overhead	Distribution	Luminaire	LUM HPS RWY 250W	Active	250	90435-67003	S14	CITY OF PAWTUCKET
0004	000	1	MINERAL SPRING	AVE	484	Overhead	Distribution	Luminaire	LUM HPS RWY 100W	Active	100	90435-67003	S14	CITY OF PAWTUCKET
0005	000	1	MINERAL SPRING	AVE	484	Overhead	Distribution	Luminaire	LUM HPS RWY 100W	Active	100	90435-67003	S14	CITY OF PAWTUCKET
0006	000	1	MINERAL SPRING	AVE	484	Overhead	Distribution	Luminaire	LUM HPS RWY 100W	Active	100	90435-67003	S14	CITY OF PAWTUCKET
0007	000	1	MINERAL SPRING	AVE	484	Overhead	Distribution	Luminaire	LUM HPS RWY 100W	Active	100	90435-67003	S14	CITY OF PAWTUCKET
0008	000	1	MINERAL SPRING	AVE	484	Overhead	Distribution	Luminaire	LUM HPS RWY 100W	Active	100	90435-67003	S14	CITY OF PAWTUCKET
0009	000	1	MINERAL SPRING	AVE	484	Overhead	Distribution	Luminaire	LUM HPS RWY 100W	Active	100	90435-67003	S14	CITY OF PAWTUCKET
0010	000	1	MINERAL SPRING	AVE	484	Overhead	Distribution	Luminaire	LUM HPS RWY 100W	Active	100	90435-67003	S14	CITY OF PAWTUCKET
0011	000	1	MINERAL SPRING	AVE	484	Overhead	Distribution	Luminaire	LUM HPS RWY 100W	Active	100	90435-67003	S14	CITY OF PAWTUCKET
0012	000	1	MINERAL SPRING	AVE	484	Overhead	Distribution	Luminaire	LUM HPS RWY 100W	Active	100	90435-67003	S14	CITY OF PAWTUCKET
0013	000	1	MINERAL SPRING	AVE	484	Overhead	Distribution	Luminaire	LUM HPS RWY 100W	Active	100	90435-67003	S14	CITY OF PAWTUCKET
0014	000	1	MINERAL SPRING	AVE	484	Overhead	Distribution	Luminaire	LUM HPS RWY 100W	Active	100	90435-67003	S14	CITY OF PAWTUCKET
0015	000	1	MINERAL SPRING	AVE	484	Overhead	Distribution	Luminaire	LUM HPS RWY 100W	Active	100	90435-67003	S14	CITY OF PAWTUCKET
0016	000	1	MINERAL SPRING	AVE	484	Overhead	Distribution	Luminaire	LUM HPS RWY 100W	Active	100	90435-67003	S14	CITY OF PAWTUCKET
0020	000	1	MINERAL SPRING	AVE	484	Overhead	Distribution	Luminaire	LUM HPS RWY 100W	Active	100	90435-67003	S14	CITY OF PAWTUCKET
0022	000	1	MINERAL SPRING	AVE	484	Overhead	Distribution	Luminaire	LUM HPS RWY 100W	Active	100	90435-67003	S14	CITY OF PAWTUCKET
0024	000	2	MINERAL SPRING	AVE	484	Overhead	Distribution	Luminaire	LUM HPS RWY 100W	Active	100	90435-67003	S14	CITY OF PAWTUCKET
0028	000	1	MINERAL SPRING	AVE	484	Overhead	Distribution	Luminaire	LUM HPS RWY 250W	Active	250	90435-67003	S14	CITY OF PAWTUCKET
0031	000	1	MINERAL SPRING	AVE	484	Overhead	Distribution	Luminaire	LUM HPS RWY 250W	Active	250	90435-67003	S14	CITY OF PAWTUCKET
0031	001	1	MINERAL SPRING	AVE	484	Overhead	Distribution	Luminaire	LUM HPS RWY 100W	Active	100	90435-67003	S14	CITY OF PAWTUCKET
0033	000	1	MINERAL SPRING	AVE	484	Overhead	Distribution	Luminaire	LUM HPS RWY 100W	Active	100	90435-67003	S14	CITY OF PAWTUCKET
0034	000	1	MINERAL SPRING	AVE	484	Overhead	Distribution	Luminaire	LUM HPS RWY 100W	Active	100	90435-67003	S14	CITY OF PAWTUCKET
0035	000	1	MINERAL SPRING	AVE	484	Overhead	Distribution	Luminaire	LUM HPS RWY 100W	Active	100	90435-67003	S14	CITY OF PAWTUCKET
0035	030	1	MINERAL SPRING	AVE	484	Overhead	Distribution	Luminaire	LUM HPS FLD 400W	Active	400	40585-12006	S14	PAWTUCKET SCHOOL DEP
0035	031	1	MINERAL SPRING	AVE	484	Overhead	Distribution	Luminaire	LUM HPS FLD 400W	Active	400	40585-12006	S14	PAWTUCKET SCHOOL DEP
0035	031	2	MINERAL SPRING	AVE	484	Overhead	Distribution	Luminaire	LUM HPS FLD 400W	Active	400	40585-12006	S14	PAWTUCKET SCHOOL DEP
0036	000	1	MINERAL SPRING	AVE	484	Overhead	Distribution	Luminaire	LUM HPS RWY 100W	Active	100	90435-67003	S14	CITY OF PAWTUCKET
0037	000	1	MINERAL SPRING	AVE	484	Overhead	Distribution	Luminaire	LUM HPS RWY 100W	Active	100	90435-67003	S14	CITY OF PAWTUCKET
0038	000	1	MINERAL SPRING	AVE	484	Overhead	Distribution	Luminaire	LUM HPS RWY 100W	Active	100	90435-67003	S14	CITY OF PAWTUCKET

0039	000	1	MINERAL SPRING	AVE	484	Overhead	Distribution	Luminaire	LUM HPS RWY 100W	Active	100	90435-67003	S14	CITY OF PAWTUCKET
0040	000	1	MINERAL SPRING	AVE	484	Overhead	Distribution	Luminaire	LUM HPS RWY 100W	Active	100	90435-67003	S14	CITY OF PAWTUCKET
0041	000	1	MINERAL SPRING	AVE	484	Overhead	Distribution	Luminaire	LUM HPS RWY 100W	Active	100	90435-67003	S14	CITY OF PAWTUCKET
0042	000	1	MINERAL SPRING	AVE	484	Overhead	Distribution	Luminaire	LUM HPS RWY 100W	Active	100	90435-67003	S14	CITY OF PAWTUCKET
0043	000	1	MINERAL SPRING	AVE	484	Overhead	Distribution	Luminaire	LUM HPS RWY 100W	Active	100	90435-67003	S14	CITY OF PAWTUCKET
0045	000	1	MINERAL SPRING	AVE	484	Overhead	Distribution	Luminaire	LUM HPS RWY 100W	Active	100	90435-67003	S14	CITY OF PAWTUCKET
0047	000	1	MINERAL SPRING	AVE	484	Overhead	Distribution	Luminaire	LUM HPS RWY 100W	Active	100	90435-67003	S14	CITY OF PAWTUCKET
0048	000	1	MINERAL SPRING	AVE	484	Overhead	Distribution	Luminaire	LUM HPS RWY 100W	Active	100	90435-67003	S14	CITY OF PAWTUCKET
0050	000	1	MINERAL SPRING	AVE	484	Overhead	Distribution	Luminaire	LUM HPS RWY 100W	Active	100	90435-67003	S14	CITY OF PAWTUCKET
0051	000	1	MINERAL SPRING	AVE	484	Overhead	Distribution	Luminaire	LUM HPS RWY 100W	Active	100	90435-67003	S14	CITY OF PAWTUCKET
0054	000	1	MINERAL SPRING	AVE	484	Overhead	Distribution	Luminaire	LUM HPS RWY 100W	Active	100	90435-67003	S14	CITY OF PAWTUCKET
0056	000	1	MINERAL SPRING	AVE	484	Overhead	Distribution	Luminaire	LUM HPS RWY 100W	Active	100	90435-67003	S14	CITY OF PAWTUCKET
0057	000	1	MINERAL SPRING	AVE	484	Overhead	Distribution	Luminaire	LUM HPS RWY 100W	Active	100	90435-67003	S14	CITY OF PAWTUCKET
0058	000	1	MINERAL SPRING	AVE	484	Overhead	Distribution	Luminaire	LUM HPS RWY 100W	Active	100	90435-67003	S14	CITY OF PAWTUCKET
0060	000	1	MINERAL SPRING	AVE	484	Overhead	Distribution	Luminaire	LUM HPS RWY 100W	Active	100	90435-67003	S14	CITY OF PAWTUCKET
0061	000	1	MINERAL SPRING	AVE	484	Overhead	Distribution	Luminaire	LUM HPS RWY 100W	Active	100	90435-67003	S14	CITY OF PAWTUCKET
0063	000	1	MINERAL SPRING	AVE	484	Overhead	Distribution	Luminaire	LUM HPS RWY 100W	Active	100	90435-67003	S14	CITY OF PAWTUCKET
0064	000	1	MINERAL SPRING	AVE	484	Overhead	Distribution	Luminaire	LUM HPS RWY 100W	Active	100	90435-67003	S14	CITY OF PAWTUCKET
0065	000	1	MINERAL SPRING	AVE	484	Overhead	Distribution	Luminaire	LUM HPS RWY 100W	Active	100	90435-67003	S14	CITY OF PAWTUCKET
0066	000	1	MINERAL SPRING	AVE	484	Overhead	Distribution	Luminaire	LUM HPS RWY 100W	Active	100	90435-67003	S14	CITY OF PAWTUCKET
0067	000	1	MINERAL SPRING	AVE	484	Overhead	Distribution	Luminaire	LUM HPS RWY 100W	Active	100	90435-67003	S14	CITY OF PAWTUCKET
0068	000	1	MINERAL SPRING	AVE	484	Overhead	Distribution	Luminaire	LUM HPS RWY 100W	Active	100	90435-67003	S14	CITY OF PAWTUCKET
0069	000	1	MINERAL SPRING	AVE	484	Overhead	Distribution	Luminaire	LUM HPS RWY 100W	Active	100	90435-67003	S14	CITY OF PAWTUCKET
0070	000	1	MINERAL SPRING	AVE	484	Overhead	Distribution	Luminaire	LUM HPS RWY 100W	Active	100	90435-67003	S14	CITY OF PAWTUCKET
0071	000	1	MINERAL SPRING	AVE	484	Overhead	Distribution	Luminaire	LUM HPS RWY 100W	Active	100	90435-67003	S14	CITY OF PAWTUCKET
0072	000	1	MINERAL SPRING	AVE	484	Overhead	Distribution	Luminaire	LUM HPS RWY 100W	Active	100	90435-67003	S14	CITY OF PAWTUCKET
0073	000	1	MINERAL SPRING	AVE	484	Overhead	Distribution	Luminaire	LUM HPS RWY 100W	Active	100	90435-67003	S14	CITY OF PAWTUCKET
0073	001	1	MINERAL SPRING	AVE	484	Overhead	Distribution	Luminaire	LUM HPS RWY 100W	Active	100	90435-67003	S14	CITY OF PAWTUCKET
0074	000	1	MINERAL SPRING	AVE	484	Overhead	Distribution	Luminaire	LUM HPS RWY 100W	Active	100	90435-67003	S14	CITY OF PAWTUCKET
0075	000	1	MINERAL SPRING	AVE	484	Overhead	Distribution	Luminaire	LUM HPS RWY 100W	Active	100	90435-67003	S14	CITY OF PAWTUCKET
0076	000	1	MINERAL SPRING	AVE	484	Overhead	Distribution	Luminaire	LUM HPS RWY 100W	Active	100	90435-67003	S14	CITY OF PAWTUCKET
0077	000	1	MINERAL SPRING	AVE	484	Overhead	Distribution	Luminaire	LUM HPS RWY 100W	Active	100	90435-67003	S14	CITY OF PAWTUCKET
0078	000	1	MINERAL SPRING	AVE	484	Overhead	Distribution	Luminaire	LUM HPS RWY 100W	Active	100	90435-67003	S14	CITY OF PAWTUCKET
0080	000	1	MINERAL SPRING	AVE	484	Overhead	Distribution	Luminaire	LUM HPS RWY 100W	Active	100	90435-67003	S14	CITY OF PAWTUCKET
0081	000	1	MINERAL SPRING	AVE	484	Overhead	Distribution	Luminaire	LUM HPS RWY 100W	Active	100	90435-67003	S14	CITY OF PAWTUCKET
0082	000	1	MINERAL SPRING	AVE	484	Overhead	Distribution	Luminaire	LUM HPS RWY 100W	Active	100	90435-67003	S14	CITY OF PAWTUCKET
0083	000	1	MINERAL SPRING	AVE	484	Overhead	Distribution	Luminaire	LUM HPS RWY 100W	Active	100	90435-67003	S14	CITY OF PAWTUCKET
0084	000	1	MINERAL SPRING	AVE	484	Overhead	Distribution	Luminaire	LUM HPS RWY 100W	Active	100	90435-67003	S14	CITY OF PAWTUCKET
0085	000	1	MINERAL SPRING	AVE	484	Overhead	Distribution	Luminaire	LUM HPS RWY 100W	Active	100	90435-67003	S14	CITY OF PAWTUCKET
0086	000	1	MINERAL SPRING	AVE	484	Overhead	Distribution	Luminaire	LUM HPS RWY 100W	Active	100	90435-67003	S14	CITY OF PAWTUCKET
0087	000	1	MINERAL SPRING	AVE	484	Overhead	Distribution	Luminaire	LUM HPS RWY 100W	Active	100	90435-67003	S14	CITY OF PAWTUCKET
0088	000	1	MINERAL SPRING	AVE	484	Overhead	Distribution	Luminaire	LUM HPS RWY 100W	Active	100	90435-67003	S14	CITY OF PAWTUCKET
0089	000	1	MINERAL SPRING	AVE	484	Overhead	Distribution	Luminaire	LUM HPS RWY 100W	Active	100	90435-67003	S14	CITY OF PAWTUCKET
0090	000	1	MINERAL SPRING	AVE	484	Overhead	Distribution	Luminaire	LUM HPS RWY 100W	Active	100	90435-67003	S14	CITY OF PAWTUCKET
0091	000	1	MINERAL SPRING	AVE	484	Overhead	Distribution	Luminaire	LUM HPS RWY 100W	Active	100	90435-67003	S14	CITY OF PAWTUCKET
0092	000	1	MINERAL SPRING	AVE	484	Overhead	Distribution	Luminaire	LUM HPS RWY 100W	Active	100	90435-67003	S14	CITY OF PAWTUCKET
0093	000	1	MINERAL SPRING	AVE	484	Overhead	Distribution	Luminaire	LUM HPS RWY 100W	Active	100	90435-67003	S14	CITY OF PAWTUCKET
0094	000	1	MINERAL SPRING	AVE	484	Overhead	Distribution	Luminaire	LUM HPS RWY 100W	Active	100	90435-67003	S14	CITY OF PAWTUCKET
0095	000	1	MINERAL SPRING	AVE	484	Overhead	Distribution	Luminaire	LUM HPS RWY 100W	Active	100	90435-67003	S14	CITY OF PAWTUCKET
0096	000	1	MINERAL SPRING	AVE	484	Overhead	Distribution	Luminaire	LUM HPS RWY 100W	Active	100	90435-67003	S14	CITY OF PAWTUCKET
0097	000	1	MINERAL SPRING	AVE	484	Overhead	Distribution	Luminaire	LUM HPS RWY 100W	Active	100	90435-67003	S14	CITY OF PAWTUCKET
0001	000	1	MONROE	ST	485	Overhead	Distribution	Luminaire	LUM HPS RWY 70W	Active	70	90435-67003	S14	CITY OF PAWTUCKET
0002	000	1	MONROE	ST	485	Overhead	Distribution	Luminaire	LUM HPS RWY 70W	Active	70	90435-67003	S14	CITY OF PAWTUCKET
0004	000	1	MONROE	ST	485	Overhead	Distribution	Luminaire	LUM HPS RWY 70W	Active	70	90435-67003	S14	CITY OF PAWTUCKET
0001	000	1	MONT CARMELE	ST	1620	Overhead	Distribution	Luminaire	LUM HPS FLD 250W	Active	250	90435-67003	S14	CITY OF PAWTUCKET
0001	000	1	MONTGOMERY	ST	486	Overhead	Distribution	Luminaire	LUM HPS RWY 100W	Active	100	90435-67003	S14	CITY OF PAWTUCKET
0002	000	0	MONTGOMERY	ST	486	Underground	Streetlighting	Pole	POLE METAL =>25FT	Active	0	90435-67003	S14	CITY OF PAWTUCKET
0002	000	1	MONTGOMERY	ST	486	Underground	Streetlighting	Luminaire	LUM HPS RWY 250W	Active	250	90435-67003	S14	CITY OF PAWTUCKET
0003	001	1	MONTGOMERY	ST	486	Overhead	Distribution	Luminaire	LUM HPS RWY 250W	Active	250	90435-67003	S14	CITY OF PAWTUCKET
0004	000	1	MONTGOMERY	ST	486	Overhead	Distribution	Luminaire	LUM HPS RWY 250W	Active	250	90435-67003	S14	CITY OF PAWTUCKET
0005	000	1	MONTGOMERY	ST	486	Overhead	Distribution	Luminaire	LUM HPS RWY 250W	Active	250	90435-67003	S14	CITY OF PAWTUCKET
0006	000	1	MONTGOMERY	ST	486	Overhead	Distribution	Luminaire	LUM HPS RWY 250W	Active	250	90435-67003	S14	CITY OF PAWTUCKET
0007	000	1	MONTGOMERY	ST	486	Overhead	Distribution	Luminaire	LUM HPS RWY 250W	Active	250	90435-67003	S14	CITY OF PAWTUCKET

0008	000	1	MONTGOMERY	ST	486	Overhead	Distribution	Luminaire	LUM HPS RWY 250W	Active	250	90435-67003	S14	CITY OF PAWTUCKET
0009	000	1	MONTGOMERY	ST	486	Overhead	Distribution	Luminaire	LUM HPS RWY 250W	Active	250	90435-67003	S14	CITY OF PAWTUCKET
0010	000	1	MONTGOMERY	ST	486	Overhead	Distribution	Luminaire	LUM HPS RWY 250W	Active	250	90435-67003	S14	CITY OF PAWTUCKET
0012	000	1	MONTGOMERY	ST	486	Overhead	Distribution	Luminaire	LUM HPS RWY 250W	Active	250	90435-67003	S14	CITY OF PAWTUCKET
0013	000	1	MONTGOMERY	ST	486	Overhead	Distribution	Luminaire	LUM HPS RWY 250W	Active	250	90435-67003	S14	CITY OF PAWTUCKET
0001	000	1	MONTICELLO	PL	487	Overhead	Distribution	Luminaire	LUM HPS RWY 100W	Active	100	90435-67003	S14	CITY OF PAWTUCKET
0002	000	1	MONTICELLO	RD	488	Overhead	Distribution	Luminaire	LUM HPS RWY 100W	Active	100	90435-67003	S14	CITY OF PAWTUCKET
0003	000	1	MONTICELLO	PL	487	Overhead	Distribution	Luminaire	LUM HPS RWY 100W	Active	100	90435-67003	S14	CITY OF PAWTUCKET
0003	000	1	MONTICELLO	RD	488	Overhead	Distribution	Luminaire	LUM HPS RWY 100W	Active	100	90435-67003	S14	CITY OF PAWTUCKET
0004	000	1	MONTICELLO	RD	488	Overhead	Distribution	Luminaire	LUM HPS RWY 100W	Active	100	90435-67003	S14	CITY OF PAWTUCKET
0005	000	1	MONTICELLO	RD	488	Overhead	Distribution	Luminaire	LUM HPS RWY 70W	Active	70	90435-67003	S14	CITY OF PAWTUCKET
0006	000	1	MONTICELLO	RD	488	Overhead	Distribution	Luminaire	LUM HPS RWY 400W	Active	400	90435-67003	S14	CITY OF PAWTUCKET
0008	000	1	MONTICELLO	RD	488	Overhead	Distribution	Luminaire	LUM HPS RWY 70W	Active	70	90435-67003	S14	CITY OF PAWTUCKET
0009	000	1	MONTICELLO	RD	488	Overhead	Distribution	Luminaire	LUM HPS RWY 70W	Active	70	90435-67003	S14	CITY OF PAWTUCKET
0011	000	1	MONTICELLO	RD	488	Overhead	Distribution	Luminaire	LUM HPS RWY 70W	Active	70	90435-67003	S14	CITY OF PAWTUCKET
0012	000	1	MONTICELLO	RD	488	Overhead	Distribution	Luminaire	LUM HPS RWY 70W	Active	70	90435-67003	S14	CITY OF PAWTUCKET
0014	000	1	MONTICELLO	RD	488	Overhead	Distribution	Luminaire	LUM HPS RWY 70W	Active	70	90435-67003	S14	CITY OF PAWTUCKET
0016	000	1	MONTICELLO	RD	488	Overhead	Distribution	Luminaire	LUM HPS RWY 70W	Active	70	90435-67003	S14	CITY OF PAWTUCKET
0018	000	1	MONTICELLO	RD	488	Overhead	Distribution	Luminaire	LUM HPS RWY 70W	Active	70	90435-67003	S14	CITY OF PAWTUCKET
0020	000	1	MONTICELLO	RD	488	Overhead	Distribution	Luminaire	LUM HPS RWY 70W	Active	70	90435-67003	S14	CITY OF PAWTUCKET
0023	000	1	MONTICELLO	RD	488	Overhead	Distribution	Luminaire	LUM HPS RWY 70W	Active	70	90435-67003	S14	CITY OF PAWTUCKET
0026	000	1	MONTICELLO	RD	488	Overhead	Distribution	Luminaire	LUM HPS RWY 70W	Active	70	90435-67003	S14	CITY OF PAWTUCKET
0001	000	1	MORRIS	AVE	489	Overhead	Distribution	Luminaire	LUM HPS RWY 70W	Active	70	90435-67003	S14	CITY OF PAWTUCKET
0003	000	1	MORRIS	AVE	489	Overhead	Distribution	Luminaire	LUM HPS RWY 70W	Active	70	90435-67003	S14	CITY OF PAWTUCKET
0007	000	1	MORRIS	AVE	489	Overhead	Distribution	Luminaire	LUM HPS RWY 70W	Active	70	90435-67003	S14	CITY OF PAWTUCKET
0009	000	1	MORRIS	AVE	489	Overhead	Distribution	Luminaire	LUM HPS RWY 70W	Active	70	90435-67003	S14	CITY OF PAWTUCKET
0011	000	1	MORRIS	AVE	489	Overhead	Distribution	Luminaire	LUM HPS RWY 70W	Active	70	90435-67003	S14	CITY OF PAWTUCKET
0014	000	1	MORRIS	AVE	489	Overhead	Distribution	Luminaire	LUM HPS RWY 50W	Active	50	90435-67003	S14	CITY OF PAWTUCKET
0016	000	1	MORRIS	AVE	489	Overhead	Distribution	Luminaire	LUM HPS RWY 70W	Active	70	90435-67003	S14	CITY OF PAWTUCKET
0018	000	1	MORRIS	AVE	489	Overhead	Distribution	Luminaire	LUM HPS RWY 70W	Active	70	90435-67003	S14	CITY OF PAWTUCKET
0020	000	1	MORRIS	AVE	489	Overhead	Distribution	Luminaire	LUM HPS RWY 70W	Active	70	90435-67003	S14	CITY OF PAWTUCKET
0002	000	1	MOSHASSUCK	ST	491	Overhead	Distribution	Luminaire	LUM HPS RWY 70W	Active	70	90435-67003	S14	CITY OF PAWTUCKET
0004	000	1	MOSHASSUCK	ST	491	Overhead	Distribution	Luminaire	LUM HPS RWY 70W	Active	70	90435-67003	S14	CITY OF PAWTUCKET
0005	000	1	MOSHASSUCK	ST	491	Overhead	Distribution	Luminaire	LUM HPS RWY 70W	Active	70	90435-67003	S14	CITY OF PAWTUCKET
0009	000	1	MOSHASSUCK	ST	491	Overhead	Distribution	Luminaire	LUM HPS FLD 400W	Active	400	3371-64002	S14	CITY OF PAWTUCKET
0051	000	1	MOSHASSUCK IN	HWY	490	Overhead	Distribution	Luminaire	LUM HPS RWY 100W	Active	100	90435-67003	S14	CITY OF PAWTUCKET
0052	000	1	MOSHASSUCK IN	HWY	490	Overhead	Distribution	Luminaire	LUM HPS FLD 400W	Active	400	3371-62008	S14	PAWTUCKET HOUSING AUTHORITY
0052	000	2	MOSHASSUCK IN	HWY	490	Overhead	Distribution	Luminaire	LUM HPS RWY 100W	Active	100	90435-67003	S14	CITY OF PAWTUCKET
0054	000	1	MOSHASSUCK IN	HWY	490	Overhead	Distribution	Luminaire	LUM HPS RWY 100W	Active	100	90435-67003	S14	CITY OF PAWTUCKET
0056	000	1	MOSHASSUCK IN	HWY	490	Overhead	Distribution	Luminaire	LUM HPS RWY 100W	Active	100	90435-67003	S14	CITY OF PAWTUCKET
0058	000	1	MOSHASSUCK IN	HWY	490	Overhead	Distribution	Luminaire	LUM HPS RWY 100W	Active	100	90435-67003	S14	CITY OF PAWTUCKET
0004	000	1	MOSS	ST	493	Overhead	Distribution	Luminaire	LUM HPS RWY 70W	Active	70	90435-67003	S14	CITY OF PAWTUCKET
0006	000	1	MOSS	ST	493	Overhead	Distribution	Luminaire	LUM HPS RWY 70W	Active	70	90435-67003	S14	CITY OF PAWTUCKET
0003	000	1	MOWRY	ST	494	Overhead	Distribution	Luminaire	LUM HPS RWY 70W	Active	70	90435-67003	S14	CITY OF PAWTUCKET
0005	000	1	MOWRY	ST	494	Overhead	Distribution	Luminaire	LUM HPS RWY 70W	Active	70	90435-67003	S14	CITY OF PAWTUCKET
0007	000	1	MOWRY	ST	494	Overhead	Distribution	Luminaire	LUM HPS RWY 70W	Active	70	90435-67003	S14	CITY OF PAWTUCKET
0009	000	1	MOWRY	ST	494	Overhead	Distribution	Luminaire	LUM HPS RWY 70W	Active	70	90435-67003	S14	CITY OF PAWTUCKET
0011	000	1	MOWRY	ST	494	Overhead	Distribution	Luminaire	LUM HPS RWY 70W	Active	70	90435-67003	S14	CITY OF PAWTUCKET
0001	000	1	MT VERNON	BLVD	495	Overhead	Distribution	Luminaire	LUM HPS RWY 70W	Active	70	90435-67003	S14	CITY OF PAWTUCKET
0002	000	1	MT VERNON	BLVD	495	Overhead	Distribution	Luminaire	LUM HPS RWY 70W	Active	70	90435-67003	S14	CITY OF PAWTUCKET
0003	000	1	MT VERNON	BLVD	495	Overhead	Distribution	Luminaire	LUM HPS RWY 70W	Active	70	90435-67003	S14	CITY OF PAWTUCKET
0004	000	1	MT VERNON	BLVD	495	Overhead	Distribution	Luminaire	LUM HPS RWY 70W	Active	70	90435-67003	S14	CITY OF PAWTUCKET
0006	000	1	MT VERNON	BLVD	495	Overhead	Distribution	Luminaire	LUM HPS RWY 70W	Active	70	90435-67003	S14	CITY OF PAWTUCKET
0009	000	1	MT VERNON	BLVD	495	Overhead	Distribution	Luminaire	LUM HPS RWY 70W	Active	70	90435-67003	S14	CITY OF PAWTUCKET
0012	000	1	MT VERNON	BLVD	495	Overhead	Distribution	Luminaire	LUM HPS RWY 70W	Active	70	90435-67003	S14	CITY OF PAWTUCKET
0013	000	1	MT VERNON	BLVD	495	Overhead	Distribution	Luminaire	LUM HPS RWY 70W	Active	70	90435-67003	S14	CITY OF PAWTUCKET
0014	000	1	MT VERNON	BLVD	495	Overhead	Distribution	Luminaire	LUM HPS RWY 70W	Active	70	90435-67003	S14	CITY OF PAWTUCKET
0016	000	1	MT VERNON	BLVD	495	Overhead	Distribution	Luminaire	LUM HPS RWY 70W	Active	70	90435-67003	S14	CITY OF PAWTUCKET
0018	000	1	MT VERNON	BLVD	495	Overhead	Distribution	Luminaire	LUM HPS RWY 70W	Active	70	90435-67003	S14	CITY OF PAWTUCKET
0020	000	1	MT VERNON	BLVD	495	Overhead	Distribution	Luminaire	LUM HPS RWY 70W	Active	70	90435-67003	S14	CITY OF PAWTUCKET
0002	000	1	MULBERRY	ST	496	Overhead	Distribution	Luminaire	LUM HPS RWY 100W	Active	100	90435-67003	S14	CITY OF PAWTUCKET
0004	000	1	MULBERRY	ST	496	Overhead	Distribution	Luminaire	LUM HPS RWY 70W	Active	70	90435-67003	S14	CITY OF PAWTUCKET
0005	000	1	MULBERRY	ST	496	Overhead	Distribution	Luminaire	LUM HPS RWY 70W	Active	70	90435-67003	S14	CITY OF PAWTUCKET

0010	000	1	MULBERRY	ST	496	Overhead	Distribution	Luminaire	LUM HPS RWY 70W	Active	70	90435-67003	S14	CITY OF PAWTUCKET
0011	000	1	MULBERRY	ST	496	Overhead	Distribution	Luminaire	LUM HPS RWY 70W	Active	70	90435-67003	S14	CITY OF PAWTUCKET
0013	000	1	MULBERRY	ST	496	Overhead	Distribution	Luminaire	LUM HPS RWY 100W	Active	100	90435-67003	S14	CITY OF PAWTUCKET
0015	000	1	MULBERRY	ST	496	Overhead	Distribution	Luminaire	LUM HPS RWY 70W	Active	70	90435-67003	S14	CITY OF PAWTUCKET
0017	000	1	MULBERRY	ST	496	Overhead	Distribution	Luminaire	LUM HPS RWY 70W	Active	70	90435-67003	S14	CITY OF PAWTUCKET
0003	000	1	MYRTLE	ST	497	Overhead	Distribution	Luminaire	LUM HPS RWY 70W	Active	70	90435-67003	S14	CITY OF PAWTUCKET
0005	000	1	MYRTLE	ST	497	Overhead	Distribution	Luminaire	LUM HPS RWY 70W	Active	70	90435-67003	S14	CITY OF PAWTUCKET
0002	000	1	NANCY	ST	498	Overhead	Distribution	Luminaire	LUM HPS RWY 70W	Active	70	90435-67003	S14	CITY OF PAWTUCKET
0003	000	1	NANCY	ST	498	Overhead	Distribution	Luminaire	LUM HPS FLD 250W	Active	250	90435-67003	S14	CITY OF PAWTUCKET
0004	000	1	NANCY	ST	498	Overhead	Distribution	Luminaire	LUM HPS RWY 70W	Active	70	90435-67003	S14	CITY OF PAWTUCKET
0005	000	1	NANCY	ST	498	Overhead	Distribution	Luminaire	LUM HPS RWY 100W	Active	100	90435-67003	S14	CITY OF PAWTUCKET
0002	000	1	NARRAGANSETT	AVE	499	Overhead	Distribution	Luminaire	LUM HPS RWY 70W	Active	70	90435-67003	S14	CITY OF PAWTUCKET
0002	000	1	NARRAGANSETT	DR	500	Overhead	Distribution	Luminaire	LUM HPS RWY 250W	Active	250	90435-67003	S14	CITY OF PAWTUCKET
0003	000	1	NARRAGANSETT	DR	500	Overhead	Distribution	Luminaire	LUM HPS RWY 250W	Active	250	90435-67003	S14	CITY OF PAWTUCKET
0004	000	1	NARRAGANSETT	AVE	499	Overhead	Distribution	Luminaire	LUM HPS RWY 70W	Active	70	90435-67003	S14	CITY OF PAWTUCKET
0005	000	1	NARRAGANSETT	AVE	499	Overhead	Distribution	Luminaire	LUM HPS RWY 70W	Active	70	90435-67003	S14	CITY OF PAWTUCKET
0005	000	1	NARRAGANSETT	DR	500	Overhead	Distribution	Luminaire	LUM HPS RWY 250W	Active	250	90435-67003	S14	CITY OF PAWTUCKET
0006	000	1	NARRAGANSETT	AVE	499	Overhead	Distribution	Luminaire	LUM HPS RWY 70W	Active	70	90435-67003	S14	CITY OF PAWTUCKET
0008	000	1	NARRAGANSETT	DR	500	Overhead	Distribution	Luminaire	LUM HPS RWY 250W	Active	250	90435-67003	S14	CITY OF PAWTUCKET
0009	000	1	NARRAGANSETT	DR	500	Overhead	Distribution	Luminaire	LUM HPS RWY 250W	Active	250	90435-67003	S14	CITY OF PAWTUCKET
0011	000	1	NARRAGANSETT	DR	500	Overhead	Distribution	Luminaire	LUM HPS RWY 250W	Active	250	90435-67003	S14	CITY OF PAWTUCKET
0013	000	1	NARRAGANSETT	DR	500	Overhead	Distribution	Luminaire	LUM HPS RWY 250W	Active	250	90435-67003	S14	CITY OF PAWTUCKET
0014	000	1	NARRAGANSETT	DR	500	Overhead	Distribution	Luminaire	LUM HPS RWY 250W	Active	250	90435-67003	S14	CITY OF PAWTUCKET
0017	000	1	NARRAGANSETT	DR	500	Overhead	Distribution	Luminaire	LUM HPS FLD 250W	Active	250	90435-67003	S14	CITY OF PAWTUCKET
0017	000	2	NARRAGANSETT	DR	500	Overhead	Distribution	Luminaire	LUM HPS FLD 250W	Active	250	90435-67003	S14	CITY OF PAWTUCKET
0001	000	2	NASHUA	ST	501	Overhead	Distribution	Luminaire	LUM HPS RWY 70W	Active	70	90435-67003	S14	CITY OF PAWTUCKET
0002	000	2	NASHUA	ST	501	Overhead	Distribution	Luminaire	LUM HPS RWY 70W	Active	70	90435-67003	S14	CITY OF PAWTUCKET
0003	000	1	NASSAU	ST	502	Overhead	Distribution	Luminaire	LUM HPS RWY 70W	Active	70	90435-67003	S14	CITY OF PAWTUCKET
0005	000	1	NASSAU	ST	502	Overhead	Distribution	Luminaire	LUM HPS RWY 70W	Active	70	90435-67003	S14	CITY OF PAWTUCKET
0007	000	1	NASSAU	ST	502	Overhead	Distribution	Luminaire	LUM HPS RWY 70W	Active	70	90435-67003	S14	CITY OF PAWTUCKET
0010	000	1	NASSAU	ST	502	Overhead	Distribution	Luminaire	LUM HPS RWY 50W	Active	50	90435-67003	S14	CITY OF PAWTUCKET
0011	000	1	NASSAU	ST	502	Overhead	Distribution	Luminaire	LUM HPS FLD 250W	Active	250	90435-67003	S14	CITY OF PAWTUCKET
0012	000	1	NASSAU	ST	502	Overhead	Distribution	Luminaire	LUM HPS FLD 250W	Active	250	90435-67003	S14	CITY OF PAWTUCKET
0002	000	1	NATHANIEL	AVE	503	Overhead	Distribution	Luminaire	LUM HPS RWY 70W	Active	70	90435-67003	S14	CITY OF PAWTUCKET
0004	000	1	NATHANIEL	AVE	503	Overhead	Distribution	Luminaire	LUM HPS RWY 70W	Active	70	90435-67003	S14	CITY OF PAWTUCKET
0006	000	1	NATHANIEL	AVE	503	Overhead	Distribution	Luminaire	LUM HPS RWY 70W	Active	70	90435-67003	S14	CITY OF PAWTUCKET
0002	000	1	NAUSHON	CT	504	Overhead	Distribution	Luminaire	LUM HPS RWY 70W	Active	70	90435-67003	S14	CITY OF PAWTUCKET
0002	000	1	NAUSHON	RD	505	Overhead	Distribution	Luminaire	LUM HPS RWY 70W	Active	70	90435-67003	S14	CITY OF PAWTUCKET
0003	000	1	NAUSHON	RD	505	Overhead	Distribution	Luminaire	LUM HPS RWY 70W	Active	70	90435-67003	S14	CITY OF PAWTUCKET
0004	000	1	NAUSHON	CT	504	Overhead	Distribution	Luminaire	LUM HPS RWY 70W	Active	70	90435-67003	S14	CITY OF PAWTUCKET
0005	000	1	NAUSHON	RD	505	Overhead	Distribution	Luminaire	LUM HPS RWY 70W	Active	70	90435-67003	S14	CITY OF PAWTUCKET
0006	000	1	NAUSHON	CT	504	Overhead	Distribution	Luminaire	LUM HPS RWY 70W	Active	70	90435-67003	S14	CITY OF PAWTUCKET
0007	000	1	NAUSHON	RD	505	Overhead	Distribution	Luminaire	LUM HPS RWY 70W	Active	70	90435-67003	S14	CITY OF PAWTUCKET
0010	000	1	NAUSHON	RD	505	Overhead	Distribution	Luminaire	LUM HPS RWY 70W	Active	70	90435-67003	S14	CITY OF PAWTUCKET
0012	000	1	NAUSHON	RD	505	Overhead	Distribution	Luminaire	LUM HPS RWY 70W	Active	70	90435-67003	S14	CITY OF PAWTUCKET
0014	000	1	NAUSHON	RD	505	Overhead	Distribution	Luminaire	LUM HPS RWY 70W	Active	70	90435-67003	S14	CITY OF PAWTUCKET
0016	000	1	NAUSHON	RD	505	Overhead	Distribution	Luminaire	LUM HPS RWY 70W	Active	70	90435-67003	S14	CITY OF PAWTUCKET
0018	000	1	NAUSHON	RD	505	Overhead	Distribution	Luminaire	LUM HPS RWY 70W	Active	70	90435-67003	S14	CITY OF PAWTUCKET
0008	000	1	NEWELL	AVE	506	Overhead	Streetlighting	Luminaire	LUM HPS RWY 250W	Active	250	90435-67003	S14	CITY OF PAWTUCKET
0008	000	2	NEWELL	AVE	506	Overhead	Streetlighting	Luminaire	LUM HPS RWY 250W	Active	250	90435-67003	S14	CITY OF PAWTUCKET
0012	000	1	NEWELL	AVE	506	Overhead	Distribution	Luminaire	LUM HPS RWY 100W	Active	100	90435-67003	S14	CITY OF PAWTUCKET
0013	000	1	NEWELL	AVE	506	Overhead	Distribution	Luminaire	LUM HPS RWY 100W	Active	100	90435-67003	S14	CITY OF PAWTUCKET
0014	000	1	NEWELL	AVE	506	Overhead	Distribution	Luminaire	LUM HPS RWY 100W	Active	100	90435-67003	S14	CITY OF PAWTUCKET
0015	000	1	NEWELL	AVE	506	Overhead	Distribution	Luminaire	LUM HPS RWY 100W	Active	100	90435-67003	S14	CITY OF PAWTUCKET
0016	000	1	NEWELL	AVE	506	Overhead	Distribution	Luminaire	LUM HPS RWY 100W	Active	100	90435-67003	S14	CITY OF PAWTUCKET
0017	000	1	NEWELL	AVE	506	Overhead	Distribution	Luminaire	LUM HPS RWY 70W	Active	70	90435-67003	S14	CITY OF PAWTUCKET
0018	000	1	NEWELL	AVE	506	Overhead	Distribution	Luminaire	LUM HPS RWY 100W	Active	100	90435-67003	S14	CITY OF PAWTUCKET
0021	000	1	NEWELL	AVE	506	Overhead	Distribution	Luminaire	LUM HPS RWY 70W	Active	70	90435-67003	S14	CITY OF PAWTUCKET
0022	000	1	NEWELL	AVE	506	Overhead	Distribution	Luminaire	LUM HPS RWY 70W	Active	70	90435-67003	S14	CITY OF PAWTUCKET
0024	000	1	NEWELL	AVE	506	Overhead	Distribution	Luminaire	LUM HPS RWY 70W	Active	70	90435-67003	S14	CITY OF PAWTUCKET
0025	000	1	NEWELL	AVE	506	Overhead	Distribution	Luminaire	LUM HPS RWY 70W	Active	70	90435-67003	S14	CITY OF PAWTUCKET
0027	000	1	NEWELL	AVE	506	Overhead	Distribution	Luminaire	LUM HPS RWY 70W	Active	70	90435-67003	S14	CITY OF PAWTUCKET
0029	000	1	NEWELL	AVE	506	Overhead	Distribution	Luminaire	LUM HPS RWY 70W	Active	70	90435-67003	S14	CITY OF PAWTUCKET

0001	000	1	NEWMAN	RD	780	Overhead	Distribution	Luminaire	LUM HPS RWY 70W	Active	70	90435-67003	S14	CITY OF PAWTUCKET
0003	000	1	NEWMAN	RD	780	Overhead	Distribution	Luminaire	LUM HPS RWY 70W	Active	70	90435-67003	S14	CITY OF PAWTUCKET
0001	000	1	NEWPORT	AVE	507	Overhead	Distribution	Luminaire	LUM HPS RWY 250W	Active	250	90435-67003	S14	CITY OF PAWTUCKET
0003	000	1	NEWPORT	AVE	507	Overhead	Distribution	Luminaire	LUM HPS RWY 250W	Active	250	90435-67003	S14	CITY OF PAWTUCKET
0004	001	1	NEWPORT	AVE	507	Overhead	Distribution	Luminaire	LUM HPS RWY 250W	Active	250	90435-67003	S14	CITY OF PAWTUCKET
0006	000	1	NEWPORT	AVE	507	Overhead	Distribution	Luminaire	LUM HPS RWY 250W	Active	250	90435-67003	S14	CITY OF PAWTUCKET
0008	001	1	NEWPORT	AVE	507	Overhead	Distribution	Luminaire	LUM HPS RWY 250W	Active	250	90435-67003	S14	CITY OF PAWTUCKET
0009	000	1	NEWPORT	AVE	507	Overhead	Distribution	Luminaire	LUM HPS RWY 250W	Active	250	90435-67003	S14	CITY OF PAWTUCKET
0011	001	1	NEWPORT	AVE	507	Overhead	Distribution	Luminaire	LUM HPS RWY 250W	Active	250	90435-67003	S14	CITY OF PAWTUCKET
0013	000	1	NEWPORT	AVE	507	Overhead	Distribution	Luminaire	LUM HPS RWY 250W	Active	250	90435-67003	S14	CITY OF PAWTUCKET
0014	001	1	NEWPORT	AVE	507	Overhead	Distribution	Luminaire	LUM HPS RWY 250W	Active	250	90435-67003	S14	CITY OF PAWTUCKET
0017	000	1	NEWPORT	AVE	507	Overhead	Distribution	Luminaire	LUM HPS RWY 250W	Active	250	90435-67003	S14	CITY OF PAWTUCKET
0018	001	1	NEWPORT	AVE	507	Overhead	Distribution	Luminaire	LUM HPS RWY 250W	Active	250	90435-67003	S14	CITY OF PAWTUCKET
0020	000	1	NEWPORT	AVE	507	Overhead	Distribution	Luminaire	LUM HPS RWY 250W	Active	250	90435-67003	S14	CITY OF PAWTUCKET
0021	001	1	NEWPORT	AVE	507	Overhead	Distribution	Luminaire	LUM HPS RWY 250W	Active	250	90435-67003	S14	CITY OF PAWTUCKET
0022	000	1	NEWPORT	AVE	507	Overhead	Distribution	Luminaire	LUM HPS RWY 250W	Active	250	90435-67003	S14	CITY OF PAWTUCKET
0024	001	1	NEWPORT	AVE	507	Overhead	Distribution	Luminaire	LUM HPS RWY 250W	Active	250	90435-67003	S14	CITY OF PAWTUCKET
0026	000	1	NEWPORT	AVE	507	Overhead	Distribution	Luminaire	LUM HPS RWY 250W	Active	250	90435-67003	S14	CITY OF PAWTUCKET
0027	001	1	NEWPORT	AVE	507	Overhead	Distribution	Luminaire	LUM HPS RWY 250W	Active	250	90435-67003	S14	CITY OF PAWTUCKET
0029	000	1	NEWPORT	AVE	507	Overhead	Distribution	Luminaire	LUM HPS RWY 250W	Active	250	90435-67003	S14	CITY OF PAWTUCKET
0031	001	1	NEWPORT	AVE	507	Overhead	Distribution	Luminaire	LUM HPS RWY 250W	Active	250	90435-67003	S14	CITY OF PAWTUCKET
0031	031	1	NEWPORT	AVE	507	Overhead	Distribution	Luminaire	LUM HPS FLD 400W	Active	400	3371-64002	S14	CITY OF PAWTUCKET
0031	041	1	NEWPORT	AVE	507	Overhead	Distribution	Luminaire	LUM HPS FLD 400W	Active	400	3371-64002	S14	CITY OF PAWTUCKET
0032	000	1	NEWPORT	AVE	507	Overhead	Distribution	Luminaire	LUM HPS RWY 250W	Active	250	90435-67003	S14	CITY OF PAWTUCKET
0033	000	1	NEWPORT	AVE	507	Overhead	Distribution	Luminaire	LUM HPS FLD 400W	Active	400	90435-67003	S14	CITY OF PAWTUCKET
0034	001	1	NEWPORT	AVE	507	Overhead	Distribution	Luminaire	LUM HPS RWY 250W	Active	250	90435-67003	S14	CITY OF PAWTUCKET
0035	000	1	NEWPORT	AVE	507	Overhead	Distribution	Luminaire	LUM HPS RWY 250W	Active	250	90435-67003	S14	CITY OF PAWTUCKET
0035	001	1	NEWPORT	AVE	507	Overhead	Distribution	Luminaire	LUM HPS RWY 250W	Active	250	90435-67003	S14	CITY OF PAWTUCKET
0037	000	1	NEWPORT	AVE	507	Overhead	Distribution	Luminaire	LUM HPS RWY 250W	Active	250	90435-67003	S14	CITY OF PAWTUCKET
0039	001	1	NEWPORT	AVE	507	Overhead	Distribution	Luminaire	LUM HPS RWY 250W	Active	250	90435-67003	S14	CITY OF PAWTUCKET
0040	000	1	NEWPORT	AVE	507	Overhead	Distribution	Luminaire	LUM HPS RWY 250W	Active	250	90435-67003	S14	CITY OF PAWTUCKET
0041	001	1	NEWPORT	AVE	507	Overhead	Distribution	Luminaire	LUM HPS RWY 250W	Active	250	90435-67003	S14	CITY OF PAWTUCKET
0043	000	1	NEWPORT	AVE	507	Overhead	Distribution	Luminaire	LUM HPS RWY 250W	Active	250	90435-67003	S14	CITY OF PAWTUCKET
0046	000	1	NEWPORT	AVE	507	Overhead	Distribution	Luminaire	LUM HPS RWY 250W	Active	250	90435-67003	S14	CITY OF PAWTUCKET
0048	000	1	NEWPORT	AVE	507	Overhead	Distribution	Luminaire	LUM HPS RWY 250W	Active	250	90435-67003	S14	CITY OF PAWTUCKET
0049	001	1	NEWPORT	AVE	507	Overhead	Distribution	Luminaire	LUM HPS RWY 250W	Active	250	90435-67003	S14	CITY OF PAWTUCKET
0050	000	1	NEWPORT	AVE	507	Overhead	Distribution	Luminaire	LUM HPS RWY 250W	Active	250	90435-67003	S14	CITY OF PAWTUCKET
0051	001	1	NEWPORT	AVE	507	Overhead	Distribution	Luminaire	LUM HPS RWY 250W	Active	250	90435-67003	S14	CITY OF PAWTUCKET
0054	000	1	NEWPORT	AVE	507	Overhead	Distribution	Luminaire	LUM HPS RWY 250W	Active	250	90435-67003	S14	CITY OF PAWTUCKET
0056	000	1	NEWPORT	AVE	507	Overhead	Distribution	Luminaire	LUM HPS RWY 400W	Active	400	90435-67003	S14	CITY OF PAWTUCKET
0057	000	1	NEWPORT	AVE	507	Overhead	Distribution	Luminaire	LUM HPS RWY 250W	Active	250	90435-67003	S14	CITY OF PAWTUCKET
0058	001	1	NEWPORT	AVE	507	Overhead	Distribution	Luminaire	LUM HPS RWY 250W	Active	250	90435-67003	S14	CITY OF PAWTUCKET
0059	000	1	NEWPORT	AVE	507	Overhead	Distribution	Luminaire	LUM HPS RWY 250W	Active	250	90435-67003	S14	CITY OF PAWTUCKET
0059	001	1	NEWPORT	AVE	507	Overhead	Distribution	Luminaire	LUM HPS RWY 250W	Active	250	90435-67003	S14	CITY OF PAWTUCKET
0061	000	1	NEWPORT	AVE	507	Overhead	Distribution	Luminaire	LUM HPS RWY 250W	Active	250	90435-67003	S14	CITY OF PAWTUCKET
0062	001	1	NEWPORT	AVE	507	Overhead	Distribution	Luminaire	LUM HPS RWY 250W	Active	250	90435-67003	S14	CITY OF PAWTUCKET
0063	000	1	NEWPORT	AVE	507	Overhead	Distribution	Luminaire	LUM HPS RWY 250W	Active	250	90435-67003	S14	CITY OF PAWTUCKET
0064	001	1	NEWPORT	AVE	507	Overhead	Distribution	Luminaire	LUM HPS RWY 250W	Active	250	90435-67003	S14	CITY OF PAWTUCKET
0065	000	1	NEWPORT	AVE	507	Overhead	Distribution	Luminaire	LUM HPS RWY 250W	Active	250	90435-67003	S14	CITY OF PAWTUCKET
0066	001	1	NEWPORT	AVE	507	Overhead	Distribution	Luminaire	LUM HPS RWY 250W	Active	250	90435-67003	S14	CITY OF PAWTUCKET
0067	000	1	NEWPORT	AVE	507	Overhead	Distribution	Luminaire	LUM HPS RWY 250W	Active	250	90435-67003	S14	CITY OF PAWTUCKET
0068	000	1	NEWPORT	AVE	507	Overhead	Distribution	Luminaire	LUM HPS RWY 250W	Active	250	90435-67003	S14	CITY OF PAWTUCKET
0068	001	1	NEWPORT	AVE	507	Overhead	Distribution	Luminaire	LUM HPS RWY 250W	Active	250	90435-67003	S14	CITY OF PAWTUCKET
0070	000	1	NEWPORT	AVE	507	Overhead	Distribution	Luminaire	LUM HPS RWY 250W	Active	250	90435-67003	S14	CITY OF PAWTUCKET
0071	001	1	NEWPORT	AVE	507	Overhead	Distribution	Luminaire	LUM HPS RWY 250W	Active	250	90435-67003	S14	CITY OF PAWTUCKET
0072	000	1	NEWPORT	AVE	507	Overhead	Distribution	Luminaire	LUM HPS RWY 250W	Active	250	90435-67003	S14	CITY OF PAWTUCKET
0074	001	1	NEWPORT	AVE	507	Overhead	Distribution	Luminaire	LUM HPS RWY 250W	Active	250	90435-67003	S14	CITY OF PAWTUCKET
0075	000	1	NEWPORT	AVE	507	Overhead	Distribution	Luminaire	LUM HPS RWY 250W	Active	250	90435-67003	S14	CITY OF PAWTUCKET
0077	001	1	NEWPORT	AVE	507	Overhead	Distribution	Luminaire	LUM HPS RWY 250W	Active	250	90435-67003	S14	CITY OF PAWTUCKET
0079	000	1	NEWPORT	AVE	507	Overhead	Distribution	Luminaire	LUM HPS FLD 250W	Active	250	65507-94008	S14	PAWTUCKET SCHOOL DEP
0079	000	2	NEWPORT	AVE	507	Overhead	Distribution	Luminaire	LUM HPS RWY 250W	Active	250	90435-67003	S14	CITY OF PAWTUCKET
0081	001	1	NEWPORT	AVE	507	Overhead	Distribution	Luminaire	LUM HPS FLD 250W	Active	250	53045-39003	S14	PAWTUCKET SCHOOL DEP
0081	001	2	NEWPORT	AVE	507	Overhead	Distribution	Luminaire	LUM HPS RWY 250W	Active	250	90435-67003	S14	CITY OF PAWTUCKET

0082	000	1	NEWPORT	AVE	507	Overhead	Distribution	Luminaire	LUM HPS RWY 250W	Active	250	90435-67003	S14	CITY OF PAWTUCKET
0084	000	1	NEWPORT	AVE	507	Overhead	Distribution	Luminaire	LUM HPS RWY 250W	Active	250	90435-67003	S14	CITY OF PAWTUCKET
0085	001	1	NEWPORT	AVE	507	Overhead	Distribution	Luminaire	LUM HPS RWY 250W	Active	250	90435-67003	S14	CITY OF PAWTUCKET
0087	001	1	NEWPORT	AVE	507	Overhead	Distribution	Luminaire	LUM HPS RWY 250W	Active	250	90435-67003	S14	CITY OF PAWTUCKET
0088	000	1	NEWPORT	AVE	507	Overhead	Distribution	Luminaire	LUM HPS RWY 250W	Active	250	90435-67003	S14	CITY OF PAWTUCKET
0089	001	1	NEWPORT	AVE	507	Overhead	Distribution	Luminaire	LUM HPS RWY 250W	Active	250	90435-67003	S14	CITY OF PAWTUCKET
0091	000	1	NEWPORT	AVE	507	Overhead	Distribution	Luminaire	LUM HPS RWY 250W	Active	250	90435-67003	S14	CITY OF PAWTUCKET
0093	001	1	NEWPORT	AVE	507	Overhead	Distribution	Luminaire	LUM HPS RWY 250W	Active	250	90435-67003	S14	CITY OF PAWTUCKET
0095	000	1	NEWPORT	AVE	507	Overhead	Distribution	Luminaire	LUM HPS RWY 250W	Active	250	90435-67003	S14	CITY OF PAWTUCKET
0097	001	1	NEWPORT	AVE	507	Overhead	Distribution	Luminaire	LUM HPS RWY 250W	Active	250	90435-67003	S14	CITY OF PAWTUCKET
0098	000	1	NEWPORT	AVE	507	Overhead	Distribution	Luminaire	LUM HPS RWY 250W	Active	250	90435-67003	S14	CITY OF PAWTUCKET
0099	001	1	NEWPORT	AVE	507	Overhead	Distribution	Luminaire	LUM HPS RWY 250W	Active	250	90435-67003	S14	CITY OF PAWTUCKET
0101	000	1	NEWPORT	AVE	507	Overhead	Distribution	Luminaire	LUM HPS RWY 250W	Active	250	90435-67003	S14	CITY OF PAWTUCKET
0102	001	1	NEWPORT	AVE	507	Overhead	Distribution	Luminaire	LUM HPS RWY 250W	Active	250	90435-67003	S14	CITY OF PAWTUCKET
0105	001	1	NEWPORT	AVE	507	Overhead	Distribution	Luminaire	LUM HPS RWY 250W	Active	250	90435-67003	S14	CITY OF PAWTUCKET
0106	000	1	NEWPORT	AVE	507	Overhead	Distribution	Luminaire	LUM HPS RWY 100W	Active	100	90435-67003	S14	CITY OF PAWTUCKET
0107	001	1	NEWPORT	AVE	507	Overhead	Distribution	Luminaire	LUM HPS RWY 250W	Active	250	90435-67003	S14	CITY OF PAWTUCKET
0108	000	1	NEWPORT	AVE	507	Overhead	Distribution	Luminaire	LUM HPS RWY 250W	Active	250	90435-67003	S14	CITY OF PAWTUCKET
0108	001	1	NEWPORT	AVE	507	Overhead	Distribution	Luminaire	LUM HPS RWY 250W	Active	250	90435-67003	S14	CITY OF PAWTUCKET
0111	000	1	NEWPORT	AVE	507	Overhead	Distribution	Luminaire	LUM HPS RWY 250W	Active	250	90435-67003	S14	CITY OF PAWTUCKET
0112	001	1	NEWPORT	AVE	507	Overhead	Distribution	Luminaire	LUM HPS RWY 250W	Active	250	90435-67003	S14	CITY OF PAWTUCKET
0114	000	1	NEWPORT	AVE	507	Overhead	Distribution	Luminaire	LUM HPS RWY 250W	Active	250	90435-67003	S14	CITY OF PAWTUCKET
0115	001	1	NEWPORT	AVE	507	Overhead	Distribution	Luminaire	LUM HPS RWY 250W	Active	250	90435-67003	S14	CITY OF PAWTUCKET
0116	000	1	NEWPORT	AVE	507	Overhead	Distribution	Luminaire	LUM HPS RWY 250W	Active	250	90435-67003	S14	CITY OF PAWTUCKET
0117	001	1	NEWPORT	AVE	507	Overhead	Distribution	Luminaire	LUM HPS RWY 250W	Active	250	90435-67003	S14	CITY OF PAWTUCKET
0118	000	1	NEWPORT	AVE	507	Overhead	Distribution	Luminaire	LUM HPS RWY 250W	Active	250	90435-67003	S14	CITY OF PAWTUCKET
0119	000	1	NEWPORT	AVE	507	Overhead	Distribution	Luminaire	LUM HPS RWY 250W	Active	250	90435-67003	S14	CITY OF PAWTUCKET
0121	000	1	NEWPORT	AVE	507	Overhead	Distribution	Luminaire	LUM HPS RWY 250W	Active	250	90435-67003	S14	CITY OF PAWTUCKET
0124	000	1	NEWPORT	AVE	507	Overhead	Distribution	Luminaire	LUM HPS RWY 250W	Active	250	90435-67003	S14	CITY OF PAWTUCKET
0125	001	1	NEWPORT	AVE	507	Overhead	Distribution	Luminaire	LUM HPS RWY 250W	Active	250	90435-67003	S14	CITY OF PAWTUCKET
0126	000	1	NEWPORT	AVE	507	Overhead	Distribution	Luminaire	LUM HPS RWY 250W	Active	250	90435-67003	S14	CITY OF PAWTUCKET
0127	001	1	NEWPORT	AVE	507	Overhead	Distribution	Luminaire	LUM HPS RWY 250W	Active	250	90435-67003	S14	CITY OF PAWTUCKET
0128	000	1	NEWPORT	AVE	507	Overhead	Distribution	Luminaire	LUM HPS RWY 250W	Active	250	90435-67003	S14	CITY OF PAWTUCKET
0129	001	1	NEWPORT	AVE	507	Overhead	Distribution	Luminaire	LUM HPS RWY 250W	Active	250	90435-67003	S14	CITY OF PAWTUCKET
0130	000	1	NEWPORT	AVE	507	Overhead	Distribution	Luminaire	LUM HPS RWY 250W	Active	250	90435-67003	S14	CITY OF PAWTUCKET
0131	001	1	NEWPORT	AVE	507	Overhead	Distribution	Luminaire	LUM HPS RWY 250W	Active	250	90435-67003	S14	CITY OF PAWTUCKET
0132	000	1	NEWPORT	AVE	507	Overhead	Distribution	Luminaire	LUM HPS RWY 250W	Active	250	90435-67003	S14	CITY OF PAWTUCKET
0133	000	1	NEWPORT	AVE	507	Overhead	Distribution	Luminaire	LUM HPS RWY 250W	Active	250	90435-67003	S14	CITY OF PAWTUCKET
0133	001	1	NEWPORT	AVE	507	Overhead	Distribution	Luminaire	LUM HPS RWY 250W	Active	250	90435-67003	S14	CITY OF PAWTUCKET
0135	000	1	NEWPORT	AVE	507	Overhead	Distribution	Luminaire	LUM HPS RWY 250W	Active	250	90435-67003	S14	CITY OF PAWTUCKET
0003	000	1	NEWTON	ST	508	Overhead	Distribution	Luminaire	LUM HPS RWY 70W	Active	70	90435-67003	S14	CITY OF PAWTUCKET
0005	000	1	NEWTON	ST	508	Overhead	Distribution	Luminaire	LUM HPS RWY 70W	Active	70	90435-67003	S14	CITY OF PAWTUCKET
0007	000	1	NEWTON	ST	508	Overhead	Distribution	Luminaire	LUM HPS RWY 70W	Active	70	90435-67003	S14	CITY OF PAWTUCKET
0009	000	1	NEWTON	ST	508	Overhead	Distribution	Luminaire	LUM HPS RWY 70W	Active	70	90435-67003	S14	CITY OF PAWTUCKET
0010	000	1	NEWTON	ST	508	Overhead	Distribution	Luminaire	LUM HPS RWY 50W	Active	50	90435-67003	S14	CITY OF PAWTUCKET
0002	000	1	NICKERSON	ST	509	Overhead	Distribution	Luminaire	LUM HPS RWY 70W	Active	70	90435-67003	S14	CITY OF PAWTUCKET
0003	000	1	NICKERSON	ST	509	Overhead	Distribution	Luminaire	LUM HPS RWY 70W	Active	70	90435-67003	S14	CITY OF PAWTUCKET
0004	000	1	NICKERSON	ST	509	Overhead	Distribution	Luminaire	LUM HPS RWY 70W	Active	70	90435-67003	S14	CITY OF PAWTUCKET
0005	000	1	NICKERSON	ST	509	Overhead	Distribution	Luminaire	LUM HPS RWY 70W	Active	70	90435-67003	S14	CITY OF PAWTUCKET
0006	000	1	NICKERSON	ST	509	Overhead	Distribution	Luminaire	LUM HPS RWY 70W	Active	70	90435-67003	S14	CITY OF PAWTUCKET
0002	000	1	NORFOLK	AVE	512	Overhead	Distribution	Luminaire	LUM HPS RWY 100W	Active	100	90435-67003	S14	CITY OF PAWTUCKET
0004	000	1	NORFOLK	AVE	512	Overhead	Distribution	Luminaire	LUM HPS RWY 100W	Active	100	90435-67003	S14	CITY OF PAWTUCKET
0006	000	1	NORFOLK	AVE	512	Overhead	Distribution	Luminaire	LUM HPS RWY 100W	Active	100	90435-67003	S14	CITY OF PAWTUCKET
0008	000	1	NORFOLK	AVE	512	Overhead	Distribution	Luminaire	LUM HPS RWY 100W	Active	100	90435-67003	S14	CITY OF PAWTUCKET
0010	000	1	NORFOLK	AVE	512	Overhead	Distribution	Luminaire	LUM HPS RWY 100W	Active	100	90435-67003	S14	CITY OF PAWTUCKET
0011	000	1	NORFOLK	AVE	512	Overhead	Distribution	Luminaire	LUM HPS FLD 250W	Active	250	90435-67003	S14	CITY OF PAWTUCKET
0012	000	1	NORFOLK	AVE	512	Overhead	Distribution	Luminaire	LUM HPS RWY 70W	Active	70	90435-67003	S14	CITY OF PAWTUCKET
0014	000	1	NORFOLK	AVE	512	Overhead	Distribution	Luminaire	LUM HPS RWY 70W	Active	70	90435-67003	S14	CITY OF PAWTUCKET
0015	000	1	NORFOLK	AVE	512	Overhead	Distribution	Luminaire	LUM HPS RWY 70W	Active	70	90435-67003	S14	CITY OF PAWTUCKET
0017	000	1	NORFOLK	AVE	512	Overhead	Distribution	Luminaire	LUM HPS RWY 70W	Active	70	90435-67003	S14	CITY OF PAWTUCKET
0020	000	1	NORFOLK	AVE	512	Overhead	Distribution	Luminaire	LUM HPS RWY 70W	Active	70	90435-67003	S14	CITY OF PAWTUCKET
0022	000	1	NORFOLK	AVE	512	Overhead	Distribution	Luminaire	LUM HPS RWY 70W	Active	70	90435-67003	S14	CITY OF PAWTUCKET
0002	000	1	NORMAN	AVE	513	Overhead	Distribution	Luminaire	LUM HPS RWY 70W	Active	70	90435-67003	S14	CITY OF PAWTUCKET

0004	000	1	NORMAN	AVE	513	Overhead	Distribution	Luminaire	LUM HPS RWY 70W	Active	70	90435-67003	S14	CITY OF PAWTUCKET
0006	000	1	NORMAN	AVE	513	Overhead	Distribution	Luminaire	LUM HPS RWY 70W	Active	70	90435-67003	S14	CITY OF PAWTUCKET
0007	000	1	NORMAN	AVE	513	Overhead	Distribution	Luminaire	LUM HPS RWY 70W	Active	70	90435-67003	S14	CITY OF PAWTUCKET
0008	000	1	NORMAN	AVE	513	Overhead	Distribution	Luminaire	LUM HPS RWY 70W	Active	70	90435-67003	S14	CITY OF PAWTUCKET
0001	000	1	NORRIS	AVE	514	Overhead	Distribution	Luminaire	LUM HPS RWY 70W	Active	70	90435-67003	S14	CITY OF PAWTUCKET
0002	000	1	NORRIS	AVE	514	Overhead	Distribution	Luminaire	LUM HPS RWY 70W	Active	70	90435-67003	S14	CITY OF PAWTUCKET
0004	000	1	NORRIS	AVE	514	Overhead	Distribution	Luminaire	LUM HPS RWY 70W	Active	70	90435-67003	S14	CITY OF PAWTUCKET
0006	000	1	NORRIS	AVE	514	Overhead	Distribution	Luminaire	LUM HPS RWY 70W	Active	70	90435-67003	S14	CITY OF PAWTUCKET
0002	000	1	NORTH BEND	ST	515	Overhead	Distribution	Luminaire	LUM HPS RWY 100W	Active	100	90435-67003	S14	CITY OF PAWTUCKET
0004	000	1	NORTH BEND	ST	515	Overhead	Distribution	Luminaire	LUM HPS RWY 100W	Active	100	90435-67003	S14	CITY OF PAWTUCKET
0007	000	1	NORTH BEND	ST	515	Overhead	Distribution	Luminaire	LUM HPS RWY 100W	Active	100	90435-67003	S14	CITY OF PAWTUCKET
0008	000	1	NORTH BEND	ST	515	Overhead	Distribution	Luminaire	LUM HPS RWY 100W	Active	100	90435-67003	S14	CITY OF PAWTUCKET
0010	000	1	NORTH BEND	ST	515	Overhead	Distribution	Luminaire	LUM HPS RWY 100W	Active	100	90435-67003	S14	CITY OF PAWTUCKET
0011	000	1	NORTH BEND	ST	515	Overhead	Distribution	Luminaire	LUM HPS RWY 100W	Active	100	90435-67003	S14	CITY OF PAWTUCKET
0012	000	1	NORTH BEND	ST	515	Overhead	Distribution	Luminaire	LUM HPS RWY 100W	Active	100	90435-67003	S14	CITY OF PAWTUCKET
0013	000	1	NORTH BEND	ST	515	Overhead	Distribution	Luminaire	LUM HPS RWY 100W	Active	100	90435-67003	S14	CITY OF PAWTUCKET
0015	000	1	NORTH BEND	ST	515	Overhead	Distribution	Luminaire	LUM HPS RWY 100W	Active	100	90435-67003	S14	CITY OF PAWTUCKET
0017	000	1	NORTH BEND	ST	515	Overhead	Distribution	Luminaire	LUM HPS RWY 100W	Active	100	90435-67003	S14	CITY OF PAWTUCKET
0019	000	1	NORTH BEND	ST	515	Overhead	Distribution	Luminaire	LUM HPS RWY 100W	Active	100	90435-67003	S14	CITY OF PAWTUCKET
0020	000	1	NORTH BEND	ST	515	Overhead	Distribution	Luminaire	LUM HPS RWY 100W	Active	100	90435-67003	S14	CITY OF PAWTUCKET
0022	000	1	NORTH BEND	ST	515	Overhead	Distribution	Luminaire	LUM HPS RWY 100W	Active	100	90435-67003	S14	CITY OF PAWTUCKET
0024	000	1	NORTH BEND	ST	515	Overhead	Distribution	Luminaire	LUM HPS RWY 100W	Active	100	90435-67003	S14	CITY OF PAWTUCKET
0025	000	1	NORTH BEND	ST	515	Overhead	Distribution	Luminaire	LUM HPS RWY 100W	Active	100	90435-67003	S14	CITY OF PAWTUCKET
0026	000	1	NORTH BEND	ST	515	Overhead	Distribution	Luminaire	LUM HPS RWY 100W	Active	100	90435-67003	S14	CITY OF PAWTUCKET
0027	000	1	NORTH BEND	ST	515	Overhead	Distribution	Luminaire	LUM HPS RWY 100W	Active	100	90435-67003	S14	CITY OF PAWTUCKET
0030	000	1	NORTH BEND	ST	515	Overhead	Distribution	Luminaire	LUM HPS RWY 250W	Active	250	90435-67003	S14	CITY OF PAWTUCKET
0030	000	2	NORTH BEND	ST	515	Overhead	Distribution	Luminaire	LUM HPS RWY 250W	Active	250	90435-67003	S14	CITY OF PAWTUCKET
0003	000	1	NORTON	ST	516	Overhead	Distribution	Luminaire	LUM HPS RWY 70W	Active	70	90435-67003	S14	CITY OF PAWTUCKET
0005	000	1	NORTON	ST	516	Overhead	Distribution	Luminaire	LUM HPS RWY 50W	Active	50	90435-67003	S14	CITY OF PAWTUCKET
0007	000	1	NORTON	ST	516	Overhead	Distribution	Luminaire	LUM HPS RWY 70W	Active	70	90435-67003	S14	CITY OF PAWTUCKET
0009	000	1	NORTON	ST	516	Overhead	Distribution	Luminaire	LUM HPS RWY 70W	Active	70	90435-67003	S14	CITY OF PAWTUCKET
0003	000	1	NOTRE DAME	AVE	517	Overhead	Distribution	Luminaire	LUM HPS RWY 100W	Active	100	90435-67003	S14	CITY OF PAWTUCKET
0006	000	1	NOTRE DAME	AVE	517	Overhead	Distribution	Luminaire	LUM HPS RWY 100W	Active	100	90435-67003	S14	CITY OF PAWTUCKET
0008	000	1	NOTRE DAME	AVE	517	Overhead	Distribution	Luminaire	LUM HPS RWY 100W	Active	100	90435-67003	S14	CITY OF PAWTUCKET
0010	000	1	NOTRE DAME	AVE	517	Overhead	Distribution	Luminaire	LUM HPS RWY 100W	Active	100	90435-67003	S14	CITY OF PAWTUCKET
0012	000	1	NOTRE DAME	AVE	517	Overhead	Distribution	Luminaire	LUM HPS RWY 100W	Active	100	90435-67003	S14	CITY OF PAWTUCKET
0013	000	1	NOTRE DAME	AVE	517	Overhead	Distribution	Luminaire	LUM HPS RWY 100W	Active	100	90435-67003	S14	CITY OF PAWTUCKET
0001	001	1	NOTTINGHAM	WAY	518	Overhead	Distribution	Luminaire	LUM HPS RWY 70W	Active	70	90435-67003	S14	CITY OF PAWTUCKET
0003	000	1	NOTTINGHAM	WAY	518	Overhead	Distribution	Luminaire	LUM HPS RWY 70W	Active	70	90435-67003	S14	CITY OF PAWTUCKET
0004	000	1	NOTTINGHAM	WAY	518	Overhead	Distribution	Luminaire	LUM HPS RWY 70W	Active	70	90435-67003	S14	CITY OF PAWTUCKET
0001	000	1	NYE	ST	519	Overhead	Distribution	Luminaire	LUM HPS RWY 70W	Active	70	90435-67003	S14	CITY OF PAWTUCKET
0003	000	1	NYE	ST	519	Overhead	Distribution	Luminaire	LUM HPS RWY 70W	Active	70	90435-67003	S14	CITY OF PAWTUCKET
0005	000	1	NYE	ST	519	Overhead	Distribution	Luminaire	LUM HPS RWY 70W	Active	70	90435-67003	S14	CITY OF PAWTUCKET
0007	000	1	NYE	ST	519	Overhead	Distribution	Luminaire	LUM HPS RWY 70W	Active	70	90435-67003	S14	CITY OF PAWTUCKET
0003	000	1	OAK HILL	AVE	521	Overhead	Distribution	Luminaire	LUM HPS RWY 70W	Active	70	90435-67003	S14	CITY OF PAWTUCKET
0006	000	1	OAK HILL	AVE	521	Overhead	Distribution	Luminaire	LUM HPS RWY 70W	Active	70	90435-67003	S14	CITY OF PAWTUCKET
0007	000	1	OAK HILL	AVE	521	Overhead	Distribution	Luminaire	LUM HPS RWY 70W	Active	70	90435-67003	S14	CITY OF PAWTUCKET
0009	000	1	OAK HILL	AVE	521	Overhead	Distribution	Luminaire	LUM HPS RWY 70W	Active	70	90435-67003	S14	CITY OF PAWTUCKET
0011	000	1	OAK HILL	AVE	521	Overhead	Distribution	Luminaire	LUM HPS RWY 100W	Active	100	90435-67003	S14	CITY OF PAWTUCKET
0011	000	2	OAK HILL	AVE	521	Overhead	Distribution	Luminaire	LUM HPS FLD 250W	Active	250	90435-67003	S14	CITY OF PAWTUCKET
0012	000	1	OAK HILL	AVE	521	Overhead	Distribution	Luminaire	LUM HPS RWY 70W	Active	70	90435-67003	S14	CITY OF PAWTUCKET
0013	000	1	OAK HILL	AVE	521	Overhead	Distribution	Luminaire	LUM HPS RWY 70W	Active	70	90435-67003	S14	CITY OF PAWTUCKET
0015	000	1	OAK HILL	AVE	521	Overhead	Distribution	Luminaire	LUM HPS RWY 70W	Active	70	90435-67003	S14	CITY OF PAWTUCKET
0017	000	1	OAK HILL	AVE	521	Overhead	Distribution	Luminaire	LUM HPS RWY 70W	Active	70	90435-67003	S14	CITY OF PAWTUCKET
0002	000	1	OAKDALE	AVE	520	Overhead	Distribution	Luminaire	LUM HPS RWY 70W	Active	70	90435-67003	S14	CITY OF PAWTUCKET
0004	000	1	OAKDALE	AVE	520	Overhead	Distribution	Luminaire	LUM HPS RWY 70W	Active	70	90435-67003	S14	CITY OF PAWTUCKET
0005	000	1	OAKDALE	AVE	520	Overhead	Distribution	Luminaire	LUM HPS RWY 100W	Active	100	90435-67003	S14	CITY OF PAWTUCKET
0009	000	1	OAKDALE	AVE	520	Overhead	Distribution	Luminaire	LUM HPS RWY 70W	Active	70	90435-67003	S14	CITY OF PAWTUCKET
0012	000	1	OAKDALE	AVE	520	Overhead	Distribution	Luminaire	LUM HPS RWY 70W	Active	70	90435-67003	S14	CITY OF PAWTUCKET
0013	000	1	OAKDALE	AVE	520	Overhead	Distribution	Luminaire	LUM HPS RWY 70W	Active	70	90435-67003	S14	CITY OF PAWTUCKET
0014	000	1	OAKDALE	AVE	520	Overhead	Distribution	Luminaire	LUM HPS RWY 70W	Active	70	90435-67003	S14	CITY OF PAWTUCKET
0016	000	1	OAKDALE	AVE	520	Overhead	Distribution	Luminaire	LUM HPS RWY 70W	Active	70	90435-67003	S14	CITY OF PAWTUCKET
0018	000	1	OAKDALE	AVE	520	Overhead	Distribution	Luminaire	LUM HPS RWY 70W	Active	70	90435-67003	S14	CITY OF PAWTUCKET

0020	000	1	OAKDALE	AVE	520	Overhead	Distribution	Luminaire	LUM HPS RWY 70W	Active	70	90435-67003	S14	CITY OF PAWTUCKET
0022	000	1	OAKDALE	AVE	520	Overhead	Distribution	Luminaire	LUM HPS RWY 70W	Active	70	90435-67003	S14	CITY OF PAWTUCKET
0025	000	1	OAKDALE	AVE	520	Overhead	Distribution	Luminaire	LUM HPS RWY 70W	Active	70	90435-67003	S14	CITY OF PAWTUCKET
0026	000	1	OAKDALE	AVE	520	Overhead	Distribution	Luminaire	LUM HPS RWY 70W	Active	70	90435-67003	S14	CITY OF PAWTUCKET
0028	000	1	OAKDALE	AVE	520	Overhead	Distribution	Luminaire	LUM HPS RWY 70W	Active	70	90435-67003	S14	CITY OF PAWTUCKET
0002	000	1	OAKLAND	AVE	522	Overhead	Distribution	Luminaire	LUM HPS RWY 250W	Active	250	90435-67003	S14	CITY OF PAWTUCKET
0004	000	1	OAKLAND	AVE	522	Overhead	Distribution	Luminaire	LUM HPS RWY 70W	Active	70	90435-67003	S14	CITY OF PAWTUCKET
0005	000	1	OAKLAND	AVE	522	Overhead	Distribution	Luminaire	LUM HPS RWY 70W	Active	70	90435-67003	S14	CITY OF PAWTUCKET
0006	000	1	OAKLAND	AVE	522	Overhead	Distribution	Luminaire	LUM HPS RWY 70W	Active	70	90435-67003	S14	CITY OF PAWTUCKET
0007	000	1	OAKLAND	AVE	522	Overhead	Distribution	Luminaire	LUM HPS RWY 70W	Active	70	90435-67003	S14	CITY OF PAWTUCKET
0008	000	1	OAKLAND	AVE	522	Overhead	Distribution	Luminaire	LUM HPS RWY 70W	Active	70	90435-67003	S14	CITY OF PAWTUCKET
0011	000	1	OAKLAND	AVE	522	Overhead	Distribution	Luminaire	LUM HPS RWY 70W	Active	70	90435-67003	S14	CITY OF PAWTUCKET
0013	000	1	OAKLAND	AVE	522	Overhead	Distribution	Luminaire	LUM HPS RWY 70W	Active	70	90435-67003	S14	CITY OF PAWTUCKET
0015	000	1	OAKLAND	AVE	522	Overhead	Distribution	Luminaire	LUM HPS RWY 70W	Active	70	90435-67003	S14	CITY OF PAWTUCKET
0017	000	1	OAKLAND	AVE	522	Overhead	Distribution	Luminaire	LUM HPS RWY 70W	Active	70	90435-67003	S14	CITY OF PAWTUCKET
0019	000	1	OAKLAND	AVE	522	Overhead	Distribution	Luminaire	LUM HPS RWY 70W	Active	70	90435-67003	S14	CITY OF PAWTUCKET
0020	000	1	OAKLAND	AVE	522	Overhead	Distribution	Luminaire	LUM HPS RWY 70W	Active	70	90435-67003	S14	CITY OF PAWTUCKET
0022	000	1	OAKLAND	AVE	522	Overhead	Distribution	Luminaire	LUM HPS RWY 70W	Active	70	90435-67003	S14	CITY OF PAWTUCKET
0023	000	1	OAKLAND	AVE	522	Overhead	Distribution	Luminaire	LUM HPS RWY 70W	Active	70	90435-67003	S14	CITY OF PAWTUCKET
0025	000	1	OAKLAND	AVE	522	Overhead	Distribution	Luminaire	LUM HPS RWY 70W	Active	70	90435-67003	S14	CITY OF PAWTUCKET
0027	000	1	OAKLAND	AVE	522	Overhead	Distribution	Luminaire	LUM HPS RWY 70W	Active	70	90435-67003	S14	CITY OF PAWTUCKET
0002	000	2	OLIVE	ST	523	Overhead	Distribution	Luminaire	LUM HPS FLD 400W	Active	400	90435-67003	S14	CITY OF PAWTUCKET
0002	000	3	OLIVE	ST	523	Overhead	Distribution	Luminaire	LUM HPS FLD 400W	Active	400	90435-67003	S14	CITY OF PAWTUCKET
0003	000	1	OLIVE	ST	523	Overhead	Distribution	Luminaire	LUM HPS RWY 70W	Active	70	90435-67003	S14	CITY OF PAWTUCKET
0006	000	1	OLIVE	ST	523	Overhead	Distribution	Luminaire	LUM HPS RWY 100W	Active	100	90435-67003	S14	CITY OF PAWTUCKET
0006	001	1	OLIVE	ST	523	Overhead	Distribution	Luminaire	LUM HPS RWY 70W	Active	70	90435-67003	S14	CITY OF PAWTUCKET
0008	000	1	OLIVE	ST	523	Overhead	Distribution	Luminaire	LUM HPS RWY 70W	Active	70	90435-67003	S14	CITY OF PAWTUCKET
0002	000	1	OLYMPIA	AVE	524	Overhead	Distribution	Luminaire	LUM HPS RWY 70W	Active	70	90435-67003	S14	CITY OF PAWTUCKET
0004	000	1	OLYMPIA	AVE	524	Overhead	Distribution	Luminaire	LUM HPS RWY 70W	Active	70	90435-67003	S14	CITY OF PAWTUCKET
0007	000	1	OLYMPIA	AVE	524	Overhead	Distribution	Luminaire	LUM HPS RWY 70W	Active	70	90435-67003	S14	CITY OF PAWTUCKET
0010	000	1	OLYMPIA	AVE	524	Overhead	Distribution	Luminaire	LUM HPS RWY 70W	Active	70	90435-67003	S14	CITY OF PAWTUCKET
0012	000	1	OLYMPIA	AVE	524	Overhead	Distribution	Luminaire	LUM HPS RWY 70W	Active	70	90435-67003	S14	CITY OF PAWTUCKET
0014	000	1	OLYMPIA	AVE	524	Overhead	Distribution	Luminaire	LUM HPS RWY 70W	Active	70	90435-67003	S14	CITY OF PAWTUCKET
0002	000	1	ONEIDA	ST	525	Overhead	Distribution	Luminaire	LUM HPS RWY 70W	Active	70	90435-67003	S14	CITY OF PAWTUCKET
0006	000	1	ONEIDA	ST	525	Overhead	Distribution	Luminaire	LUM HPS RWY 70W	Active	70	90435-67003	S14	CITY OF PAWTUCKET
0008	000	1	ONEIDA	ST	525	Overhead	Distribution	Luminaire	LUM HPS RWY 70W	Active	70	90435-67003	S14	CITY OF PAWTUCKET
0010	000	1	ONEIDA	ST	525	Overhead	Distribution	Luminaire	LUM HPS RWY 70W	Active	70	90435-67003	S14	CITY OF PAWTUCKET
0014	000	1	ONEIDA	ST	525	Overhead	Distribution	Luminaire	LUM HPS RWY 70W	Active	70	90435-67003	S14	CITY OF PAWTUCKET
0016	000	1	ONEIDA	ST	525	Overhead	Distribution	Luminaire	LUM HPS RWY 70W	Active	70	90435-67003	S14	CITY OF PAWTUCKET
0002	000	1	ORCHARD	ST	526	Overhead	Distribution	Luminaire	LUM HPS RWY 100W	Active	100	90435-67003	S14	CITY OF PAWTUCKET
0003	000	1	ORCHARD	ST	526	Overhead	Distribution	Luminaire	LUM HPS RWY 100W	Active	100	90435-67003	S14	CITY OF PAWTUCKET
0005	000	1	ORCHARD	ST	526	Overhead	Distribution	Luminaire	LUM HPS RWY 100W	Active	100	90435-67003	S14	CITY OF PAWTUCKET
0002	000	1	ORDWAY	ST	527	Overhead	Distribution	Luminaire	LUM HPS RWY 70W	Active	70	90435-67003	S14	CITY OF PAWTUCKET
0004	000	1	ORDWAY	ST	527	Overhead	Distribution	Luminaire	LUM HPS RWY 70W	Active	70	90435-67003	S14	CITY OF PAWTUCKET
0005	000	1	ORDWAY	ST	527	Overhead	Distribution	Luminaire	LUM HPS RWY 70W	Active	70	90435-67003	S14	CITY OF PAWTUCKET
0007	000	1	ORDWAY	ST	527	Overhead	Distribution	Luminaire	LUM HPS RWY 70W	Active	70	90435-67003	S14	CITY OF PAWTUCKET
0009	000	1	ORDWAY	ST	527	Overhead	Distribution	Luminaire	LUM HPS RWY 70W	Active	70	90435-67003	S14	CITY OF PAWTUCKET
0013	000	1	ORDWAY	ST	527	Overhead	Distribution	Luminaire	LUM HPS RWY 70W	Active	70	90435-67003	S14	CITY OF PAWTUCKET
0002	000	1	OREGON	AVE	528	Overhead	Distribution	Luminaire	LUM HPS RWY 70W	Active	70	90435-67003	S14	CITY OF PAWTUCKET
0006	000	1	OREGON	AVE	528	Overhead	Distribution	Luminaire	LUM HPS RWY 70W	Active	70	90435-67003	S14	CITY OF PAWTUCKET
0008	000	1	OREGON	AVE	528	Overhead	Distribution	Luminaire	LUM HPS RWY 70W	Active	70	90435-67003	S14	CITY OF PAWTUCKET
0011	000	1	OREGON	AVE	528	Overhead	Distribution	Luminaire	LUM HPS RWY 70W	Active	70	90435-67003	S14	CITY OF PAWTUCKET
0013	000	1	OREGON	AVE	528	Overhead	Distribution	Luminaire	LUM HPS RWY 70W	Active	70	90435-67003	S14	CITY OF PAWTUCKET
0015	000	1	OREGON	AVE	528	Overhead	Distribution	Luminaire	LUM HPS RWY 70W	Active	70	90435-67003	S14	CITY OF PAWTUCKET
0017	000	1	OREGON	AVE	528	Overhead	Distribution	Luminaire	LUM HPS RWY 70W	Active	70	90435-67003	S14	CITY OF PAWTUCKET
0018	000	1	OREGON	AVE	528	Overhead	Distribution	Luminaire	LUM HPS RWY 70W	Active	70	90435-67003	S14	CITY OF PAWTUCKET
0003	000	1	ORIENT	AVE	529	Overhead	Distribution	Luminaire	LUM HPS RWY 100W	Active	100	90435-67003	S14	CITY OF PAWTUCKET
0006	000	1	ORIENT	AVE	529	Overhead	Distribution	Luminaire	LUM HPS RWY 100W	Active	100	90435-67003	S14	CITY OF PAWTUCKET
0022	000	1	ORIENT	AVE	529	Overhead	Distribution	Luminaire	LUM HPS RWY 100W	Active	100	90435-67003	S14	CITY OF PAWTUCKET
0023	000	1	ORIENT	AVE	529	Overhead	Distribution	Luminaire	LUM HPS RWY 70W	Active	70	90435-67003	S14	CITY OF PAWTUCKET
0025	000	1	ORIENT	AVE	529	Overhead	Distribution	Luminaire	LUM HPS RWY 100W	Active	100	90435-67003	S14	CITY OF PAWTUCKET
0027	000	1	ORIENT	AVE	529	Overhead	Distribution	Luminaire	LUM HPS RWY 100W	Active	100	90435-67003	S14	CITY OF PAWTUCKET
0034	000	1	ORIENT	AVE	529	Overhead	Distribution	Luminaire	LUM HPS RWY 100W	Active	100	90435-67003	S14	CITY OF PAWTUCKET

0036	000	1	ORIENT	AVE	529	Overhead	Distribution	Luminaire	LUM HPS RWY 100W	Active	100	90435-67003	S14	CITY OF PAWTUCKET
0001	000	1	ORIOLE	AVE	530	Overhead	Distribution	Luminaire	LUM HPS RWY 70W	Active	70	90435-67003	S14	CITY OF PAWTUCKET
0003	000	1	ORIOLE	AVE	530	Overhead	Distribution	Luminaire	LUM HPS RWY 70W	Active	70	90435-67003	S14	CITY OF PAWTUCKET
0005	000	1	ORIOLE	AVE	530	Overhead	Distribution	Luminaire	LUM HPS RWY 70W	Active	70	90435-67003	S14	CITY OF PAWTUCKET
0007	000	1	ORIOLE	AVE	530	Overhead	Distribution	Luminaire	LUM HPS RWY 70W	Active	70	90435-67003	S14	CITY OF PAWTUCKET
0009	000	1	ORIOLE	AVE	530	Overhead	Distribution	Luminaire	LUM HPS RWY 70W	Active	70	90435-67003	S14	CITY OF PAWTUCKET
0010	000	1	ORIOLE	AVE	530	Overhead	Distribution	Luminaire	LUM HPS RWY 70W	Active	70	90435-67003	S14	CITY OF PAWTUCKET
0012	000	1	ORIOLE	AVE	530	Overhead	Distribution	Luminaire	LUM HPS RWY 70W	Active	70	90435-67003	S14	CITY OF PAWTUCKET
0013	000	1	ORIOLE	AVE	530	Overhead	Distribution	Luminaire	LUM HPS RWY 50W	Active	50	90435-67003	S14	CITY OF PAWTUCKET
0016	000	1	ORIOLE	AVE	530	Overhead	Distribution	Luminaire	LUM HPS RWY 70W	Active	70	90435-67003	S14	CITY OF PAWTUCKET
0018	000	1	ORIOLE	AVE	530	Overhead	Distribution	Luminaire	LUM HPS RWY 70W	Active	70	90435-67003	S14	CITY OF PAWTUCKET
0001	000	1	ORMS	ST	531	Overhead	Distribution	Luminaire	LUM HPS RWY 70W	Active	70	90435-67003	S14	CITY OF PAWTUCKET
0003	000	1	ORMS	ST	531	Overhead	Distribution	Luminaire	LUM HPS RWY 70W	Active	70	90435-67003	S14	CITY OF PAWTUCKET
0005	000	1	ORMS	ST	531	Overhead	Distribution	Luminaire	LUM HPS RWY 70W	Active	70	90435-67003	S14	CITY OF PAWTUCKET
0002	000	1	ORTH	ST	532	Overhead	Distribution	Luminaire	LUM HPS RWY 70W	Active	70	90435-67003	S14	CITY OF PAWTUCKET
0002	000	1	OSWALD	ST	533	Overhead	Distribution	Luminaire	LUM HPS RWY 70W	Active	70	90435-67003	S14	CITY OF PAWTUCKET
0004	000	1	OSWALD	ST	533	Overhead	Distribution	Luminaire	LUM HPS RWY 70W	Active	70	90435-67003	S14	CITY OF PAWTUCKET
0006	000	1	OSWALD	ST	533	Overhead	Distribution	Luminaire	LUM HPS RWY 70W	Active	70	90435-67003	S14	CITY OF PAWTUCKET
0008	000	1	OSWALD	ST	533	Overhead	Distribution	Luminaire	LUM HPS RWY 70W	Active	70	90435-67003	S14	CITY OF PAWTUCKET
0010	000	1	OSWALD	ST	533	Overhead	Distribution	Luminaire	LUM HPS RWY 70W	Active	70	90435-67003	S14	CITY OF PAWTUCKET
0012	000	1	OSWALD	ST	533	Overhead	Distribution	Luminaire	LUM HPS RWY 70W	Active	70	90435-67003	S14	CITY OF PAWTUCKET
0014	000	1	OSWALD	ST	533	Overhead	Distribution	Luminaire	LUM HPS RWY 70W	Active	70	90435-67003	S14	CITY OF PAWTUCKET
0003	000	1	OVERLAND	AVE	534	Overhead	Distribution	Luminaire	LUM HPS RWY 70W	Active	70	90435-67003	S14	CITY OF PAWTUCKET
0004	000	1	OVERLAND	AVE	534	Overhead	Distribution	Luminaire	LUM HPS RWY 70W	Active	70	90435-67003	S14	CITY OF PAWTUCKET
0005	000	1	OVERLAND	AVE	534	Overhead	Distribution	Luminaire	LUM HPS RWY 70W	Active	70	90435-67003	S14	CITY OF PAWTUCKET
0006	000	1	OVERLAND	AVE	534	Overhead	Distribution	Luminaire	LUM HPS RWY 70W	Active	70	90435-67003	S14	CITY OF PAWTUCKET
0009	000	1	OVERLAND	AVE	534	Overhead	Distribution	Luminaire	LUM HPS RWY 70W	Active	70	90435-67003	S14	CITY OF PAWTUCKET
0001	002	1	OWEN	AVE	535	Overhead	Distribution	Luminaire	LUM HPS RWY 70W	Active	70	90435-67003	S14	CITY OF PAWTUCKET
0002	000	1	OWEN	AVE	535	Overhead	Distribution	Luminaire	LUM HPS RWY 70W	Active	70	90435-67003	S14	CITY OF PAWTUCKET
0003	000	1	OWEN	AVE	535	Overhead	Distribution	Luminaire	LUM HPS RWY 70W	Active	70	90435-67003	S14	CITY OF PAWTUCKET
0004	000	1	OWEN	AVE	535	Overhead	Distribution	Luminaire	LUM HPS RWY 70W	Active	70	90435-67003	S14	CITY OF PAWTUCKET
0006	000	1	OWEN	AVE	535	Overhead	Distribution	Luminaire	LUM HPS RWY 70W	Active	70	90435-67003	S14	CITY OF PAWTUCKET
0008	000	1	OWEN	AVE	535	Overhead	Distribution	Luminaire	LUM HPS RWY 70W	Active	70	90435-67003	S14	CITY OF PAWTUCKET
0009	000	1	OWEN	AVE	535	Overhead	Distribution	Luminaire	LUM HPS FLD 250W	Active	250	3371-64002	S14	CITY OF PAWTUCKET
0011	000	1	OWEN	AVE	535	Overhead	Distribution	Luminaire	LUM HPS RWY 100W	Active	100	90435-67003	S14	CITY OF PAWTUCKET
0012	000	1	OWEN	AVE	535	Overhead	Distribution	Luminaire	LUM HPS RWY 100W	Active	100	90435-67003	S14	CITY OF PAWTUCKET
0013	000	1	OWEN	AVE	535	Overhead	Distribution	Luminaire	LUM HPS RWY 70W	Active	70	90435-67003	S14	CITY OF PAWTUCKET
0015	000	1	OWEN	AVE	535	Overhead	Distribution	Luminaire	LUM HPS RWY 70W	Active	70	90435-67003	S14	CITY OF PAWTUCKET
0017	000	1	OWEN	AVE	535	Overhead	Distribution	Luminaire	LUM HPS RWY 70W	Active	70	90435-67003	S14	CITY OF PAWTUCKET
0019	000	1	OWEN	AVE	535	Overhead	Distribution	Luminaire	LUM HPS RWY 70W	Active	70	90435-67003	S14	CITY OF PAWTUCKET
0022	000	1	OWEN	AVE	535	Overhead	Distribution	Luminaire	LUM HPS RWY 70W	Active	70	90435-67003	S14	CITY OF PAWTUCKET
0003	000	1	PACKER	ST	772	Overhead	Distribution	Luminaire	LUM HPS RWY 70W	Active	70	90435-67003	S14	CITY OF PAWTUCKET
0002	000	1	PAISLEY	ST	536	Overhead	Distribution	Luminaire	LUM HPS RWY 70W	Active	70	90435-67003	S14	CITY OF PAWTUCKET
0004	000	1	PAISLEY	ST	536	Overhead	Distribution	Luminaire	LUM HPS RWY 70W	Active	70	90435-67003	S14	CITY OF PAWTUCKET
0006	000	1	PAISLEY	ST	536	Overhead	Distribution	Luminaire	LUM HPS RWY 70W	Active	70	90435-67003	S14	CITY OF PAWTUCKET
0002	000	1	PALM	ST	537	Overhead	Distribution	Luminaire	LUM HPS RWY 70W	Active	70	90435-67003	S14	CITY OF PAWTUCKET
0004	000	1	PALM	ST	537	Overhead	Distribution	Luminaire	LUM HPS RWY 70W	Active	70	90435-67003	S14	CITY OF PAWTUCKET
0001	000	1	PARIS	ST	538	Overhead	Distribution	Luminaire	LUM HPS RWY 50W	Active	50	90435-67003	S14	CITY OF PAWTUCKET
0002	000	1	PARIS	ST	538	Overhead	Distribution	Luminaire	LUM HPS RWY 70W	Active	70	90435-67003	S14	CITY OF PAWTUCKET
0003	000	1	PARIS	ST	538	Overhead	Distribution	Luminaire	LUM HPS RWY 70W	Active	70	90435-67003	S14	CITY OF PAWTUCKET
0001	000	1	PARK	ST	539	Overhead	Distribution	Luminaire	LUM HPS RWY 250W	Active	250	90435-67003	S14	CITY OF PAWTUCKET
0003	000	1	PARK	ST	539	Overhead	Distribution	Luminaire	LUM HPS RWY 100W	Active	100	90435-67003	S14	CITY OF PAWTUCKET
0004	000	1	PARK	ST	539	Overhead	Distribution	Luminaire	LUM HPS RWY 70W	Active	70	90435-67003	S14	CITY OF PAWTUCKET
0005	000	1	PARK	ST	539	Overhead	Distribution	Luminaire	LUM HPS RWY 70W	Active	70	90435-67003	S14	CITY OF PAWTUCKET
0006	000	1	PARK	ST	539	Overhead	Distribution	Luminaire	LUM HPS RWY 70W	Active	70	90435-67003	S14	CITY OF PAWTUCKET
0008	000	1	PARK	ST	539	Overhead	Distribution	Luminaire	LUM HPS RWY 70W	Active	70	90435-67003	S14	CITY OF PAWTUCKET
0009	000	1	PARK	ST	539	Overhead	Distribution	Luminaire	LUM HPS RWY 70W	Active	70	90435-67003	S14	CITY OF PAWTUCKET
0010	000	1	PARK	ST	539	Overhead	Distribution	Luminaire	LUM HPS RWY 70W	Active	70	90435-67003	S14	CITY OF PAWTUCKET
0011	000	1	PARK	ST	539	Overhead	Distribution	Luminaire	LUM HPS RWY 70W	Active	70	90435-67003	S14	CITY OF PAWTUCKET
0013	000	1	PARK	ST	539	Overhead	Distribution	Luminaire	LUM HPS RWY 70W	Active	70	90435-67003	S14	CITY OF PAWTUCKET
0017	000	1	PARK	ST	539	Overhead	Distribution	Luminaire	LUM HPS RWY 70W	Active	70	90435-67003	S14	CITY OF PAWTUCKET
0018	000	1	PARK	ST	539	Overhead	Distribution	Luminaire	LUM HPS RWY 70W	Active	70	90435-67003	S14	CITY OF PAWTUCKET
0001	000	0	PARK PLACE	ST	540	Underground	Streetlighting	Pole	POLE METAL =>25FT	Active	0	90435-67003	S14	CITY OF PAWTUCKET

0001	000	1	PARK PLACE	ST	540	Underground	Streetlighting	Luminaire	LUM HPS RWY 250W	Active	250	90435-67003	S14	CITY OF PAWTUCKET
0001	000	2	PARK PLACE	ST	540	Underground	Streetlighting	Luminaire	LUM HPS FLD 400W	Active	400	53045-82004	S10	PAWTUCKET SCHOOL DEP
0001	000	0	PARK PLACE	ST	542	Underground	Streetlighting	Pole	POLE METAL =>25FT	Active	0	90435-67003	S14	CITY OF PAWTUCKET
0001	000	1	PARK PLACE	ST	542	Underground	Streetlighting	Luminaire	LUM HPS RWY 250W	Active	250	90435-67003	S14	CITY OF PAWTUCKET
0002	000	0	PARK PLACE	ST	540	Underground	Streetlighting	Pole	POLE METAL =>25FT	Active	0	90435-67003	S14	CITY OF PAWTUCKET
0002	000	1	PARK PLACE	ST	540	Underground	Streetlighting	Luminaire	LUM HPS RWY 250W	Active	250	90435-67003	S14	CITY OF PAWTUCKET
0002	000	0	PARK PLACE	ST	542	Underground	Streetlighting	Pole	POLE METAL =>25FT	Active	0	90435-67003	S14	CITY OF PAWTUCKET
0002	000	1	PARK PLACE	ST	542	Underground	Streetlighting	Luminaire	LUM HPS RWY 250W	Active	250	90435-67003	S14	CITY OF PAWTUCKET
0003	000	0	PARK PLACE	ST	540	Underground	Streetlighting	Pole	POLE METAL =>25FT	Active	0	90435-67003	S14	CITY OF PAWTUCKET
0003	000	1	PARK PLACE	ST	540	Underground	Streetlighting	Luminaire	LUM HPS RWY 250W	Active	250	90435-67003	S14	CITY OF PAWTUCKET
0003	000	0	PARK PLACE	ST	542	Underground	Streetlighting	Pole	POLE METAL =>25FT	Active	0	90435-67003	S14	CITY OF PAWTUCKET
0003	000	1	PARK PLACE	ST	542	Underground	Streetlighting	Luminaire	LUM HPS RWY 250W	Active	250	90435-67003	S14	CITY OF PAWTUCKET
0004	000	0	PARK PLACE	ST	540	Underground	Streetlighting	Pole	POLE METAL =>25FT	Active	0	90435-67003	S14	CITY OF PAWTUCKET
0004	000	1	PARK PLACE	ST	540	Underground	Streetlighting	Luminaire	LUM HPS RWY 250W	Active	250	90435-67003	S14	CITY OF PAWTUCKET
0004	000	1	PARK PLACE	ST	541	Overhead	Distribution	Luminaire	LUM HPS RWY 100W	Active	100	90435-67003	S14	CITY OF PAWTUCKET
0004	000	0	PARK PLACE	ST	542	Underground	Streetlighting	Pole	POLE METAL =>25FT	Active	0	90435-67003	S14	CITY OF PAWTUCKET
0004	000	1	PARK PLACE	ST	542	Underground	Streetlighting	Luminaire	LUM HPS RWY 250W	Active	250	90435-67003	S14	CITY OF PAWTUCKET
0005	000	1	PARK PLACE	ST	541	Overhead	Distribution	Luminaire	LUM HPS RWY 100W	Active	100	90435-67003	S14	CITY OF PAWTUCKET
0005	000	0	PARK PLACE	ST	542	Underground	Streetlighting	Pole	POLE METAL =>25FT	Active	0	90435-67003	S14	CITY OF PAWTUCKET
0005	000	1	PARK PLACE	ST	542	Underground	Streetlighting	Luminaire	LUM HPS RWY 250W	Active	250	90435-67003	S14	CITY OF PAWTUCKET
0005	001	1	PARK PLACE	ST	541	Overhead	Distribution	Luminaire	LUM HPS RWY 100W	Active	100	90435-67003	S14	CITY OF PAWTUCKET
0006	000	0	PARK PLACE	ST	540	Underground	Streetlighting	Pole	POLE METAL =>25FT	Active	0	90435-67003	S14	CITY OF PAWTUCKET
0006	000	1	PARK PLACE	ST	540	Underground	Streetlighting	Luminaire	LUM HPS RWY 250W	Active	250	90435-67003	S14	CITY OF PAWTUCKET
0006	000	2	PARK PLACE	ST	540	Underground	Streetlighting	Luminaire	LUM HPS RWY 250W	Active	250	90435-67003	S14	CITY OF PAWTUCKET
0006	000	1	PARK PLACE	ST	541	Overhead	Distribution	Luminaire	LUM HPS RWY 100W	Active	100	90435-67003	S14	CITY OF PAWTUCKET
0006	000	0	PARK PLACE	ST	542	Underground	Streetlighting	Pole	POLE METAL =>25FT	Active	0	90435-67003	S14	CITY OF PAWTUCKET
0006	000	1	PARK PLACE	ST	542	Underground	Streetlighting	Luminaire	LUM HPS RWY 250W	Active	250	90435-67003	S14	CITY OF PAWTUCKET
0007	000	1	PARK PLACE	ST	541	Overhead	Distribution	Luminaire	LUM HPS RWY 250W	Active	250	90435-67003	S14	CITY OF PAWTUCKET
0007	000	0	PARK PLACE	ST	542	Underground	Streetlighting	Pole	POLE METAL =>25FT	Active	0	90435-67003	S14	CITY OF PAWTUCKET
0007	000	1	PARK PLACE	ST	542	Underground	Streetlighting	Luminaire	LUM HPS RWY 250W	Active	250	90435-67003	S14	CITY OF PAWTUCKET
0008	000	0	PARK PLACE	ST	542	Underground	Streetlighting	Pole	POLE METAL =>25FT	Active	0	90435-67003	S14	CITY OF PAWTUCKET
0008	000	1	PARK PLACE	ST	542	Underground	Streetlighting	Luminaire	LUM HPS RWY 250W	Active	250	90435-67003	S14	CITY OF PAWTUCKET
0015	000	1	PARK PLACE	ST	540	Overhead	Distribution	Luminaire	LUM HPS RWY 100W	Active	100	90435-67003	S14	CITY OF PAWTUCKET
0137	000	0	PARK PLACE	ST	542	Underground	Streetlighting	Pole	POLE METAL =>25FT	Active	0	90435-67003	S14	CITY OF PAWTUCKET
0137	000	1	PARK PLACE	ST	542	Underground	Streetlighting	Luminaire	LUM HPS FLD 400W	Active	400	90435-67003	S14	CITY OF PAWTUCKET
0001	000	1	PARKER	DR	543	Overhead	Distribution	Luminaire	LUM HPS RWY 70W	Active	70	90435-67003	S14	CITY OF PAWTUCKET
0001	000	1	PARKSIDE	AVE	544	Overhead	Distribution	Luminaire	LUM HPS RWY 70W	Active	70	90435-67003	S14	CITY OF PAWTUCKET
0002	000	1	PARKSIDE	AVE	544	Overhead	Distribution	Luminaire	LUM HPS RWY 70W	Active	70	90435-67003	S14	CITY OF PAWTUCKET
0004	000	1	PARKSIDE	AVE	544	Overhead	Distribution	Luminaire	LUM HPS RWY 70W	Active	70	90435-67003	S14	CITY OF PAWTUCKET
0006	000	1	PARKSIDE	AVE	544	Overhead	Distribution	Luminaire	LUM HPS RWY 70W	Active	70	90435-67003	S14	CITY OF PAWTUCKET
0008	000	1	PARKSIDE	AVE	544	Overhead	Distribution	Luminaire	LUM HPS RWY 70W	Active	70	90435-67003	S14	CITY OF PAWTUCKET
0010	000	1	PARKSIDE	AVE	544	Overhead	Distribution	Luminaire	LUM HPS RWY 70W	Active	70	90435-67003	S14	CITY OF PAWTUCKET
0012	000	1	PARKSIDE	AVE	544	Overhead	Distribution	Luminaire	LUM HPS RWY 70W	Active	70	90435-67003	S14	CITY OF PAWTUCKET
0014	000	1	PARKSIDE	AVE	544	Overhead	Distribution	Luminaire	LUM HPS RWY 70W	Active	70	90435-67003	S14	CITY OF PAWTUCKET
0016	000	1	PARKSIDE	AVE	544	Overhead	Distribution	Luminaire	LUM HPS RWY 70W	Active	70	90435-67003	S14	CITY OF PAWTUCKET
0018	000	1	PARKSIDE	AVE	544	Overhead	Distribution	Luminaire	LUM HPS RWY 70W	Active	70	90435-67003	S14	CITY OF PAWTUCKET
0002	000	1	PARKVIEW	DR	545	Overhead	Distribution	Luminaire	LUM HPS RWY 100W	Active	100	90435-67003	S14	CITY OF PAWTUCKET
0003	000	1	PARKVIEW	DR	545	Overhead	Distribution	Luminaire	LUM HPS RWY 100W	Active	100	90435-67003	S14	CITY OF PAWTUCKET
0004	000	1	PARKVIEW	DR	545	Overhead	Distribution	Luminaire	LUM HPS RWY 100W	Active	100	90435-67003	S14	CITY OF PAWTUCKET
0005	000	1	PARKVIEW	DR	545	Overhead	Distribution	Luminaire	LUM HPS RWY 100W	Active	100	90435-67003	S14	CITY OF PAWTUCKET
0006	000	1	PARKVIEW	DR	545	Overhead	Distribution	Luminaire	LUM HPS RWY 100W	Active	100	90435-67003	S14	CITY OF PAWTUCKET
0010	000	1	PARKVIEW	DR	545	Overhead	Distribution	Luminaire	LUM HPS RWY 100W	Active	100	90435-67003	S14	CITY OF PAWTUCKET
0011	000	1	PARKVIEW	DR	545	Overhead	Distribution	Luminaire	LUM HPS RWY 250W	Active	250	90435-67003	S14	CITY OF PAWTUCKET
0014	000	1	PARKVIEW	DR	545	Overhead	Distribution	Luminaire	LUM HPS RWY 100W	Active	100	90435-67003	S14	CITY OF PAWTUCKET
0015	000	1	PARKVIEW	DR	545	Overhead	Distribution	Luminaire	LUM HPS RWY 100W	Active	100	90435-67003	S14	CITY OF PAWTUCKET
0016	000	1	PARKVIEW	DR	545	Overhead	Distribution	Luminaire	LUM HPS RWY 100W	Active	100	90435-67003	S14	CITY OF PAWTUCKET
0019	000	1	PARKVIEW	DR	545	Overhead	Distribution	Luminaire	LUM HPS RWY 100W	Active	100	90435-67003	S14	CITY OF PAWTUCKET
0021	000	1	PARKVIEW	DR	545	Overhead	Distribution	Luminaire	LUM HPS RWY 100W	Active	100	90435-67003	S14	CITY OF PAWTUCKET
0022	000	1	PARKVIEW	DR	545	Overhead	Distribution	Luminaire	LUM HPS RWY 100W	Active	100	90435-67003	S14	CITY OF PAWTUCKET
0024	000	1	PARKVIEW	DR	545	Overhead	Distribution	Luminaire	LUM HPS RWY 100W	Active	100	90435-67003	S14	CITY OF PAWTUCKET
0003	000	1	PATT	ST	546	Overhead	Distribution	Luminaire	LUM HPS RWY 100W	Active	100	90435-67003	S14	CITY OF PAWTUCKET
0004	000	1	PATT	ST	546	Overhead	Distribution	Luminaire	LUM HPS FLD 400W	Active	400	90435-67003	S14	CITY OF PAWTUCKET
0005	000	1	PATT	ST	546	Overhead	Distribution	Luminaire	LUM HPS RWY 100W	Active	100	90435-67003	S14	CITY OF PAWTUCKET

0002	000	1	PATTERSON	AVE	547	Overhead	Distribution	Luminaire	LUM HPS RWY 70W	Active	70	90435-67003	S14	CITY OF PAWTUCKET
0006	000	1	PATTERSON	AVE	547	Overhead	Distribution	Luminaire	LUM HPS RWY 70W	Active	70	90435-67003	S14	CITY OF PAWTUCKET
0008	000	1	PATTERSON	AVE	547	Overhead	Distribution	Luminaire	LUM HPS RWY 70W	Active	70	90435-67003	S14	CITY OF PAWTUCKET
0010	000	1	PATTERSON	AVE	547	Overhead	Distribution	Luminaire	LUM HPS RWY 70W	Active	70	90435-67003	S14	CITY OF PAWTUCKET
0002	000	1	PAUL	ST	548	Overhead	Distribution	Luminaire	LUM HPS RWY 70W	Active	70	90435-67003	S14	CITY OF PAWTUCKET
0005	000	1	PAUL	ST	548	Overhead	Distribution	Luminaire	LUM HPS RWY 70W	Active	70	90435-67003	S14	CITY OF PAWTUCKET
0007	000	1	PAUL	ST	548	Overhead	Distribution	Luminaire	LUM HPS RWY 70W	Active	70	90435-67003	S14	CITY OF PAWTUCKET
0001	000	1	PAULHUS	CT	549	Overhead	Distribution	Luminaire	LUM HPS RWY 70W	Active	70	90435-67003	S14	CITY OF PAWTUCKET
0002	000	1	PAULHUS	CT	549	Overhead	Distribution	Luminaire	LUM HPS RWY 70W	Active	70	90435-67003	S14	CITY OF PAWTUCKET
0003	001	1	PAWTUCKET	AVE	550	Overhead	Distribution	Luminaire	LUM HPS RWY 250W	Active	250	90435-67003	S14	CITY OF PAWTUCKET
0004	000	1	PAWTUCKET	AVE	550	Overhead	Distribution	Luminaire	LUM HPS RWY 250W	Active	250	90435-67003	S14	CITY OF PAWTUCKET
0005	001	1	PAWTUCKET	AVE	550	Overhead	Distribution	Luminaire	LUM HPS RWY 250W	Active	250	90435-67003	S14	CITY OF PAWTUCKET
0006	000	1	PAWTUCKET	AVE	550	Overhead	Distribution	Luminaire	LUM HPS RWY 250W	Active	250	90435-67003	S14	CITY OF PAWTUCKET
0008	001	1	PAWTUCKET	AVE	550	Overhead	Distribution	Luminaire	LUM HPS RWY 250W	Active	250	90435-67003	S14	CITY OF PAWTUCKET
0013	000	1	PAWTUCKET	AVE	550	Overhead	Distribution	Luminaire	LUM HPS RWY 250W	Active	250	90435-67003	S14	CITY OF PAWTUCKET
0015	000	1	PAWTUCKET	AVE	550	Overhead	Distribution	Luminaire	LUM HPS RWY 250W	Active	250	90435-67003	S14	CITY OF PAWTUCKET
0016	000	1	PAWTUCKET	AVE	550	Overhead	Distribution	Luminaire	LUM HPS RWY 250W	Active	250	90435-67003	S14	CITY OF PAWTUCKET
0018	001	1	PAWTUCKET	AVE	550	Overhead	Distribution	Luminaire	LUM HPS RWY 250W	Active	250	90435-67003	S14	CITY OF PAWTUCKET
0020	000	1	PAWTUCKET	AVE	550	Overhead	Distribution	Luminaire	LUM HPS RWY 250W	Active	250	90435-67003	S14	CITY OF PAWTUCKET
0022	001	1	PAWTUCKET	AVE	550	Overhead	Distribution	Luminaire	LUM HPS RWY 250W	Active	250	90435-67003	S14	CITY OF PAWTUCKET
0024	000	1	PAWTUCKET	AVE	550	Overhead	Distribution	Luminaire	LUM HPS RWY 250W	Active	250	90435-67003	S14	CITY OF PAWTUCKET
0025	001	1	PAWTUCKET	AVE	550	Overhead	Distribution	Luminaire	LUM HPS RWY 250W	Active	250	90435-67003	S14	CITY OF PAWTUCKET
0026	000	1	PAWTUCKET	AVE	550	Overhead	Distribution	Luminaire	LUM HPS RWY 250W	Active	250	90435-67003	S14	CITY OF PAWTUCKET
0028	001	1	PAWTUCKET	AVE	550	Overhead	Distribution	Luminaire	LUM HPS RWY 250W	Active	250	90435-67003	S14	CITY OF PAWTUCKET
0029	000	1	PAWTUCKET	AVE	550	Overhead	Distribution	Luminaire	LUM HPS RWY 250W	Active	250	90435-67003	S14	CITY OF PAWTUCKET
0031	000	1	PAWTUCKET	AVE	550	Overhead	Distribution	Luminaire	LUM HPS RWY 250W	Active	250	90435-67003	S14	CITY OF PAWTUCKET
0033	000	1	PAWTUCKET	AVE	550	Overhead	Distribution	Luminaire	LUM HPS RWY 250W	Active	250	90435-67003	S14	CITY OF PAWTUCKET
0035	000	1	PAWTUCKET	AVE	550	Overhead	Distribution	Luminaire	LUM HPS RWY 250W	Active	250	90435-67003	S14	CITY OF PAWTUCKET
0037	000	1	PAWTUCKET	AVE	550	Overhead	Distribution	Luminaire	LUM HPS RWY 250W	Active	250	90435-67003	S14	CITY OF PAWTUCKET
0039	000	1	PAWTUCKET	AVE	550	Overhead	Distribution	Luminaire	LUM HPS RWY 250W	Active	250	90435-67003	S14	CITY OF PAWTUCKET
0040	000	1	PAWTUCKET	AVE	550	Overhead	Distribution	Luminaire	LUM HPS RWY 250W	Active	250	90435-67003	S14	CITY OF PAWTUCKET
0043	001	1	PAWTUCKET	AVE	550	Overhead	Distribution	Luminaire	LUM HPS RWY 250W	Active	250	90435-67003	S14	CITY OF PAWTUCKET
0045	000	1	PAWTUCKET	AVE	550	Overhead	Distribution	Luminaire	LUM HPS RWY 250W	Active	250	90435-67003	S14	CITY OF PAWTUCKET
0047	000	1	PAWTUCKET	AVE	550	Overhead	Distribution	Luminaire	LUM HPS RWY 250W	Active	250	90435-67003	S14	CITY OF PAWTUCKET
0049	001	1	PAWTUCKET	AVE	550	Overhead	Distribution	Luminaire	LUM HPS RWY 250W	Active	250	90435-67003	S14	CITY OF PAWTUCKET
0052	000	1	PAWTUCKET	AVE	550	Overhead	Distribution	Luminaire	LUM HPS RWY 250W	Active	250	90435-67003	S14	CITY OF PAWTUCKET
0054	001	1	PAWTUCKET	AVE	550	Overhead	Distribution	Luminaire	LUM HPS RWY 250W	Active	250	90435-67003	S14	CITY OF PAWTUCKET
0056	000	1	PAWTUCKET	AVE	550	Overhead	Distribution	Luminaire	LUM HPS RWY 250W	Active	250	90435-67003	S14	CITY OF PAWTUCKET
0058	001	1	PAWTUCKET	AVE	550	Overhead	Distribution	Luminaire	LUM HPS RWY 250W	Active	250	90435-67003	S14	CITY OF PAWTUCKET
0060	000	1	PAWTUCKET	AVE	550	Overhead	Distribution	Luminaire	LUM HPS RWY 250W	Active	250	90435-67003	S14	CITY OF PAWTUCKET
0062	001	1	PAWTUCKET	AVE	550	Overhead	Distribution	Luminaire	LUM HPS RWY 250W	Active	250	90435-67003	S14	CITY OF PAWTUCKET
0064	000	1	PAWTUCKET	AVE	550	Overhead	Distribution	Luminaire	LUM HPS RWY 250W	Active	250	90435-67003	S14	CITY OF PAWTUCKET
0067	000	1	PAWTUCKET	AVE	550	Overhead	Distribution	Luminaire	LUM HPS RWY 250W	Active	250	90435-67003	S14	CITY OF PAWTUCKET
0070	000	1	PAWTUCKET	AVE	550	Overhead	Distribution	Luminaire	LUM HPS RWY 250W	Active	250	90435-67003	S14	CITY OF PAWTUCKET
0073	001	1	PAWTUCKET	AVE	550	Overhead	Distribution	Luminaire	LUM HPS RWY 250W	Active	250	90435-67003	S14	CITY OF PAWTUCKET
0074	000	1	PAWTUCKET	AVE	550	Overhead	Distribution	Luminaire	LUM HPS RWY 250W	Active	250	90435-67003	S14	CITY OF PAWTUCKET
0076	000	1	PAWTUCKET	AVE	550	Overhead	Distribution	Luminaire	LUM HPS RWY 250W	Active	250	90435-67003	S14	CITY OF PAWTUCKET
0078	000	1	PAWTUCKET	AVE	550	Overhead	Distribution	Luminaire	LUM HPS RWY 250W	Active	250	90435-67003	S14	CITY OF PAWTUCKET
0080	000	1	PAWTUCKET	AVE	550	Overhead	Distribution	Luminaire	LUM HPS RWY 250W	Active	250	90435-67003	S14	CITY OF PAWTUCKET
0082	000	1	PAWTUCKET	AVE	550	Overhead	Distribution	Luminaire	LUM HPS RWY 250W	Active	250	90435-67003	S14	CITY OF PAWTUCKET
0084	000	1	PAWTUCKET	AVE	550	Overhead	Distribution	Luminaire	LUM HPS RWY 250W	Active	250	90435-67003	S14	CITY OF PAWTUCKET
0085	001	1	PAWTUCKET	AVE	550	Overhead	Distribution	Luminaire	LUM HPS RWY 250W	Active	250	90435-67003	S14	CITY OF PAWTUCKET
0086	000	1	PAWTUCKET	AVE	550	Overhead	Distribution	Luminaire	LUM HPS RWY 250W	Active	250	90435-67003	S14	CITY OF PAWTUCKET
0087	001	1	PAWTUCKET	AVE	550	Overhead	Distribution	Luminaire	LUM HPS RWY 250W	Active	250	90435-67003	S14	CITY OF PAWTUCKET
0011	000	1	PEARL	ST	551	Overhead	Distribution	Luminaire	LUM HPS RWY 250W	Active	250	90435-67003	S14	CITY OF PAWTUCKET
0002	000	1	PEARSON	AVE	552	Overhead	Distribution	Luminaire	LUM HPS RWY 70W	Active	70	90435-67003	S14	CITY OF PAWTUCKET
0004	000	1	PEARSON	AVE	552	Overhead	Distribution	Luminaire	LUM HPS RWY 70W	Active	70	90435-67003	S14	CITY OF PAWTUCKET
0006	000	1	PEARSON	AVE	552	Overhead	Distribution	Luminaire	LUM HPS RWY 70W	Active	70	90435-67003	S14	CITY OF PAWTUCKET
0008	000	1	PEARSON	AVE	552	Overhead	Distribution	Luminaire	LUM HPS RWY 70W	Active	70	90435-67003	S14	CITY OF PAWTUCKET
0003	000	1	PECKHAM	ST	553	Overhead	Distribution	Luminaire	LUM HPS RWY 70W	Active	70	90435-67003	S14	CITY OF PAWTUCKET
0005	000	1	PECKHAM	ST	553	Overhead	Distribution	Luminaire	LUM HPS RWY 70W	Active	70	90435-67003	S14	CITY OF PAWTUCKET
0001	000	1	PEMBROKE	AVE	554	Overhead	Distribution	Luminaire	LUM HPS RWY 70W	Active	70	90435-67003	S14	CITY OF PAWTUCKET
0003	000	1	PEMBROKE	AVE	554	Overhead	Distribution	Luminaire	LUM HPS RWY 70W	Active	70	90435-67003	S14	CITY OF PAWTUCKET

0004	000	1	PEQUOT	RD	555	Overhead	Distribution	Luminaire	LUM HPS RWY 70W	Active	70	90435-67003	S14	CITY OF PAWTUCKET
0005	000	1	PEQUOT	RD	555	Overhead	Distribution	Luminaire	LUM HPS RWY 100W	Active	100	90435-67003	S14	CITY OF PAWTUCKET
0006	000	1	PEQUOT	RD	555	Overhead	Distribution	Luminaire	LUM HPS RWY 70W	Active	70	90435-67003	S14	CITY OF PAWTUCKET
0007	000	1	PEQUOT	RD	555	Overhead	Distribution	Luminaire	LUM HPS RWY 70W	Active	70	90435-67003	S14	CITY OF PAWTUCKET
0009	000	1	PEQUOT	RD	555	Overhead	Distribution	Luminaire	LUM HPS RWY 70W	Active	70	90435-67003	S14	CITY OF PAWTUCKET
0011	000	1	PEQUOT	RD	555	Overhead	Distribution	Luminaire	LUM HPS RWY 70W	Active	70	90435-67003	S14	CITY OF PAWTUCKET
0013	000	1	PEQUOT	RD	555	Overhead	Distribution	Luminaire	LUM HPS RWY 70W	Active	70	90435-67003	S14	CITY OF PAWTUCKET
0001	000	1	PERRIN	AVE	556	Overhead	Distribution	Luminaire	LUM HPS RWY 100W	Active	100	90435-67003	S14	CITY OF PAWTUCKET
0002	000	1	PERRIN	AVE	556	Overhead	Distribution	Luminaire	LUM HPS RWY 70W	Active	70	90435-67003	S14	CITY OF PAWTUCKET
0005	000	1	PERRIN	AVE	556	Overhead	Distribution	Luminaire	LUM HPS RWY 70W	Active	70	90435-67003	S14	CITY OF PAWTUCKET
0007	000	1	PERRIN	AVE	556	Overhead	Distribution	Luminaire	LUM HPS RWY 70W	Active	70	90435-67003	S14	CITY OF PAWTUCKET
0009	000	1	PERRIN	AVE	556	Overhead	Distribution	Luminaire	LUM HPS RWY 70W	Active	70	90435-67003	S14	CITY OF PAWTUCKET
0014	000	1	PERRIN	AVE	556	Overhead	Distribution	Luminaire	LUM HPS RWY 70W	Active	70	90435-67003	S14	CITY OF PAWTUCKET
0015	000	1	PERRIN	AVE	556	Overhead	Distribution	Luminaire	LUM HPS RWY 70W	Active	70	90435-67003	S14	CITY OF PAWTUCKET
0017	000	1	PERRIN	AVE	556	Overhead	Distribution	Luminaire	LUM HPS RWY 70W	Active	70	90435-67003	S14	CITY OF PAWTUCKET
0019	000	1	PERRIN	AVE	556	Overhead	Distribution	Luminaire	LUM HPS RWY 70W	Active	70	90435-67003	S14	CITY OF PAWTUCKET
0021	000	1	PERRIN	AVE	556	Overhead	Distribution	Luminaire	LUM HPS RWY 70W	Active	70	90435-67003	S14	CITY OF PAWTUCKET
0024	000	1	PERRIN	AVE	556	Overhead	Distribution	Luminaire	LUM HPS RWY 70W	Active	70	90435-67003	S14	CITY OF PAWTUCKET
0025	000	1	PERRIN	AVE	556	Overhead	Distribution	Luminaire	LUM HPS RWY 100W	Active	100	90435-67003	S14	CITY OF PAWTUCKET
0026	000	1	PERRIN	AVE	556	Overhead	Distribution	Luminaire	LUM HPS RWY 70W	Active	70	90435-67003	S14	CITY OF PAWTUCKET
0001	000	1	PIAVE	ST	557	Overhead	Distribution	Luminaire	LUM HPS RWY 70W	Active	70	90435-67003	S14	CITY OF PAWTUCKET
0002	000	1	PIAVE	ST	557	Overhead	Distribution	Luminaire	LUM HPS RWY 70W	Active	70	90435-67003	S14	CITY OF PAWTUCKET
0005	000	1	PIAVE	ST	557	Overhead	Distribution	Luminaire	LUM HPS RWY 70W	Active	70	90435-67003	S14	CITY OF PAWTUCKET
0007	000	1	PIAVE	ST	557	Overhead	Distribution	Luminaire	LUM HPS RWY 70W	Active	70	90435-67003	S14	CITY OF PAWTUCKET
0008	000	1	PIAVE	ST	557	Overhead	Distribution	Luminaire	LUM HPS RWY 70W	Active	70	90435-67003	S14	CITY OF PAWTUCKET
0009	000	1	PIAVE	ST	557	Overhead	Distribution	Luminaire	LUM HPS RWY 70W	Active	70	90435-67003	S14	CITY OF PAWTUCKET
0011	000	1	PIAVE	ST	557	Overhead	Distribution	Luminaire	LUM HPS RWY 100W	Active	100	90435-67003	S14	CITY OF PAWTUCKET
0013	000	1	PIAVE	ST	557	Overhead	Distribution	Luminaire	LUM HPS RWY 70W	Active	70	90435-67003	S14	CITY OF PAWTUCKET
0014	000	1	PIAVE	ST	557	Overhead	Distribution	Luminaire	LUM HPS RWY 70W	Active	70	90435-67003	S14	CITY OF PAWTUCKET
0005	000	1	PIDGE	AVE	558	Overhead	Distribution	Luminaire	LUM HPS RWY 70W	Active	70	90435-67003	S14	CITY OF PAWTUCKET
0009	000	1	PIDGE	AVE	558	Overhead	Distribution	Luminaire	LUM HPS RWY 70W	Active	70	90435-67003	S14	CITY OF PAWTUCKET
0011	000	1	PIDGE	AVE	558	Overhead	Distribution	Luminaire	LUM HPS RWY 70W	Active	70	90435-67003	S14	CITY OF PAWTUCKET
0013	000	1	PIDGE	AVE	558	Overhead	Distribution	Luminaire	LUM HPS RWY 70W	Active	70	90435-67003	S14	CITY OF PAWTUCKET
0015	000	1	PIDGE	AVE	558	Overhead	Distribution	Luminaire	LUM HPS RWY 70W	Active	70	90435-67003	S14	CITY OF PAWTUCKET
0019	000	1	PIDGE	AVE	558	Overhead	Distribution	Luminaire	LUM HPS RWY 70W	Active	70	90435-67003	S14	CITY OF PAWTUCKET
0023	000	1	PIDGE	AVE	558	Overhead	Distribution	Luminaire	LUM HPS RWY 70W	Active	70	90435-67003	S14	CITY OF PAWTUCKET
0025	000	1	PIDGE	AVE	558	Overhead	Distribution	Luminaire	LUM HPS RWY 70W	Active	70	90435-67003	S14	CITY OF PAWTUCKET
0027	000	1	PIDGE	AVE	558	Overhead	Distribution	Luminaire	LUM HPS RWY 70W	Active	70	90435-67003	S14	CITY OF PAWTUCKET
0031	000	1	PIDGE	AVE	558	Overhead	Distribution	Luminaire	LUM HPS RWY 70W	Active	70	90435-67003	S14	CITY OF PAWTUCKET
0033	000	1	PIDGE	AVE	558	Overhead	Distribution	Luminaire	LUM HPS RWY 70W	Active	70	90435-67003	S14	CITY OF PAWTUCKET
0035	000	1	PIDGE	AVE	558	Overhead	Distribution	Luminaire	LUM HPS RWY 70W	Active	70	90435-67003	S14	CITY OF PAWTUCKET
0037	000	1	PIDGE	AVE	558	Overhead	Distribution	Luminaire	LUM HPS RWY 100W	Active	100	90435-67003	S14	CITY OF PAWTUCKET
0039	000	1	PIDGE	AVE	558	Overhead	Distribution	Luminaire	LUM HPS RWY 70W	Active	70	90435-67003	S14	CITY OF PAWTUCKET
0043	000	1	PIDGE	AVE	558	Overhead	Distribution	Luminaire	LUM HPS RWY 70W	Active	70	90435-67003	S14	CITY OF PAWTUCKET
0001	000	1	PIERCE	ST	559	Overhead	Distribution	Luminaire	LUM HPS RWY 70W	Active	70	90435-67003	S14	CITY OF PAWTUCKET
0002	001	1	PIERCE	ST	559	Overhead	Distribution	Luminaire	LUM HPS RWY 70W	Active	70	90435-67003	S14	CITY OF PAWTUCKET
0003	000	1	PIERCE	ST	559	Overhead	Distribution	Luminaire	LUM HPS RWY 70W	Active	70	90435-67003	S14	CITY OF PAWTUCKET
0002	000	1	PINE	ST	560	Overhead	Distribution	Luminaire	LUM HPS RWY 70W	Active	70	90435-67003	S14	CITY OF PAWTUCKET
0004	000	1	PINE	ST	560	Overhead	Distribution	Luminaire	LUM HPS RWY 70W	Active	70	90435-67003	S14	CITY OF PAWTUCKET
0007	000	1	PINE	ST	560	Overhead	Distribution	Luminaire	LUM HPS RWY 70W	Active	70	90435-67003	S14	CITY OF PAWTUCKET
0009	000	1	PINE	ST	560	Overhead	Distribution	Luminaire	LUM HPS RWY 100W	Active	100	90435-67003	S14	CITY OF PAWTUCKET
0012	000	1	PINE	ST	560	Overhead	Distribution	Luminaire	LUM HPS RWY 100W	Active	100	90435-67003	S14	CITY OF PAWTUCKET
0013	000	1	PINE	ST	560	Overhead	Distribution	Luminaire	LUM HPS RWY 70W	Active	70	90435-67003	S14	CITY OF PAWTUCKET
0013	001	1	PINE	ST	560	Overhead	Distribution	Luminaire	LUM HPS RWY 250W	Active	250	90435-67003	S14	CITY OF PAWTUCKET
0016	000	1	PINE	ST	560	Overhead	Distribution	Luminaire	LUM HPS RWY 250W	Active	250	90435-67003	S14	CITY OF PAWTUCKET
0019	000	1	PINE	ST	560	Overhead	Distribution	Luminaire	LUM HPS RWY 250W	Active	250	90435-67003	S14	CITY OF PAWTUCKET
0021	000	1	PINE	ST	560	Overhead	Distribution	Luminaire	LUM HPS RWY 100W	Active	100	90435-67003	S14	CITY OF PAWTUCKET
0022	000	1	PINE	ST	560	Overhead	Distribution	Luminaire	LUM HPS RWY 100W	Active	100	90435-67003	S14	CITY OF PAWTUCKET
0023	000	1	PINE	ST	560	Overhead	Distribution	Luminaire	LUM HPS RWY 100W	Active	100	90435-67003	S14	CITY OF PAWTUCKET
0024	000	1	PINE	ST	560	Overhead	Distribution	Luminaire	LUM HPS RWY 100W	Active	100	90435-67003	S14	CITY OF PAWTUCKET
0025	000	1	PINE	ST	560	Overhead	Distribution	Luminaire	LUM HPS RWY 100W	Active	100	90435-67003	S14	CITY OF PAWTUCKET
0026	000	1	PINE	ST	560	Overhead	Distribution	Luminaire	LUM HPS RWY 100W	Active	100	90435-67003	S14	CITY OF PAWTUCKET
0027	001	1	PINE	ST	560	Overhead	Distribution	Luminaire	LUM HPS RWY 100W	Active	100	90435-67003	S14	CITY OF PAWTUCKET

0028	000	1	PINE	ST	560	Overhead	Distribution	Luminaire	LUM HPS RWY 100W	Active	100	90435-67003	S14	CITY OF PAWTUCKET
0031	000	1	PINE	ST	560	Overhead	Distribution	Luminaire	LUM HPS RWY 250W	Active	250	90435-67003	S14	CITY OF PAWTUCKET
0032	000	1	PINE	ST	560	Overhead	Distribution	Luminaire	LUM HPS RWY 250W	Active	250	90435-67003	S14	CITY OF PAWTUCKET
0033	000	1	PINE	ST	560	Overhead	Distribution	Luminaire	LUM HPS RWY 250W	Active	250	90435-67003	S14	CITY OF PAWTUCKET
0034	000	1	PINE	ST	560	Overhead	Distribution	Luminaire	LUM HPS RWY 250W	Active	250	90435-67003	S14	CITY OF PAWTUCKET
0036	000	1	PINE	ST	560	Overhead	Distribution	Luminaire	LUM HPS RWY 250W	Active	250	90435-67003	S14	CITY OF PAWTUCKET
0041	000	1	PINE	ST	560	Overhead	Distribution	Luminaire	LUM HPS RWY 100W	Active	100	90435-67003	S14	CITY OF PAWTUCKET
0047	002	1	PINE	ST	560	Overhead	Distribution	Luminaire	LUM HPS RWY 100W	Active	100	90435-67003	S14	CITY OF PAWTUCKET
0048	000	1	PINE	ST	560	Overhead	Distribution	Luminaire	LUM HPS RWY 100W	Active	100	90435-67003	S14	CITY OF PAWTUCKET
0049	000	1	PINE	ST	560	Overhead	Distribution	Luminaire	LUM HPS RWY 100W	Active	100	90435-67003	S14	CITY OF PAWTUCKET
0051	000	1	PINE	ST	560	Overhead	Distribution	Luminaire	LUM HPS RWY 100W	Active	100	90435-67003	S14	CITY OF PAWTUCKET
0053	000	1	PINE	ST	560	Overhead	Distribution	Luminaire	LUM HPS RWY 100W	Active	100	90435-67003	S14	CITY OF PAWTUCKET
0055	000	1	PINE	ST	560	Overhead	Distribution	Luminaire	LUM HPS RWY 100W	Active	100	90435-67003	S14	CITY OF PAWTUCKET
0057	000	2	PINE	ST	560	Overhead	Distribution	Luminaire	LUM HPS RWY 100W	Active	100	90435-67003	S14	CITY OF PAWTUCKET
0002	000	1	PINECREST	DR	561	Overhead	Distribution	Luminaire	LUM HPS RWY 70W	Active	70	90435-67003	S14	CITY OF PAWTUCKET
0004	000	1	PINECREST	DR	561	Overhead	Distribution	Luminaire	LUM HPS RWY 70W	Active	70	90435-67003	S14	CITY OF PAWTUCKET
0006	000	1	PINECREST	DR	561	Overhead	Distribution	Luminaire	LUM HPS RWY 70W	Active	70	90435-67003	S14	CITY OF PAWTUCKET
0008	000	1	PINECREST	DR	561	Overhead	Distribution	Luminaire	LUM HPS RWY 70W	Active	70	90435-67003	S14	CITY OF PAWTUCKET
0010	000	1	PINECREST	DR	561	Overhead	Distribution	Luminaire	LUM HPS RWY 70W	Active	70	90435-67003	S14	CITY OF PAWTUCKET
0012	000	1	PINECREST	DR	561	Overhead	Distribution	Luminaire	LUM HPS RWY 70W	Active	70	90435-67003	S14	CITY OF PAWTUCKET
0014	000	1	PINECREST	DR	561	Overhead	Distribution	Luminaire	LUM HPS RWY 70W	Active	70	90435-67003	S14	CITY OF PAWTUCKET
0016	000	1	PINECREST	DR	561	Overhead	Distribution	Luminaire	LUM HPS RWY 70W	Active	70	90435-67003	S14	CITY OF PAWTUCKET
0018	000	1	PINECREST	DR	561	Overhead	Distribution	Luminaire	LUM HPS RWY 100W	Active	100	90435-67003	S14	CITY OF PAWTUCKET
0020	000	1	PINECREST	DR	561	Overhead	Distribution	Luminaire	LUM HPS RWY 100W	Active	100	90435-67003	S14	CITY OF PAWTUCKET
0021	000	1	PINECREST	DR	561	Overhead	Distribution	Luminaire	LUM HPS RWY 70W	Active	70	90435-67003	S14	CITY OF PAWTUCKET
0022	000	1	PINECREST	DR	561	Overhead	Distribution	Luminaire	LUM HPS RWY 100W	Active	100	90435-67003	S14	CITY OF PAWTUCKET
0024	000	1	PINECREST	DR	561	Overhead	Distribution	Luminaire	LUM HPS RWY 100W	Active	100	90435-67003	S14	CITY OF PAWTUCKET
0001	000	1	PINEGROVE	ST	562	Overhead	Distribution	Luminaire	LUM HPS RWY 70W	Active	70	90435-67003	S14	CITY OF PAWTUCKET
0002	000	1	PINEGROVE	ST	562	Overhead	Distribution	Luminaire	LUM HPS RWY 70W	Active	70	90435-67003	S14	CITY OF PAWTUCKET
0003	000	1	PINEGROVE	ST	562	Overhead	Distribution	Luminaire	LUM HPS RWY 70W	Active	70	90435-67003	S14	CITY OF PAWTUCKET
0005	000	1	PINEGROVE	ST	562	Overhead	Distribution	Luminaire	LUM HPS RWY 70W	Active	70	90435-67003	S14	CITY OF PAWTUCKET
0003	000	1	PLAIN	ST	563	Overhead	Distribution	Luminaire	LUM HPS RWY 70W	Active	70	90435-67003	S14	CITY OF PAWTUCKET
0005	000	1	PLAIN	ST	563	Overhead	Distribution	Luminaire	LUM HPS RWY 70W	Active	70	90435-67003	S14	CITY OF PAWTUCKET
0007	000	1	PLAIN	ST	563	Overhead	Distribution	Luminaire	LUM HPS RWY 70W	Active	70	90435-67003	S14	CITY OF PAWTUCKET
0008	000	1	PLAIN	ST	563	Overhead	Distribution	Luminaire	LUM HPS RWY 70W	Active	70	90435-67003	S14	CITY OF PAWTUCKET
0096	000	1	PLAIN	ST	563	Overhead	Distribution	Luminaire	LUM HPS FLD 250W	Active	250	90435-67003	S14	CITY OF PAWTUCKET
0002	000	0	PLEASANT	ST	564	Underground	Streetlighting	Pole	POLE METAL =>25FT	Active	0	90435-67003	S14	CITY OF PAWTUCKET
0002	000	1	PLEASANT	ST	564	Underground	Streetlighting	Luminaire	LUM HPS RWY 250W	Active	250	90435-67003	S14	CITY OF PAWTUCKET
0005	000	0	PLEASANT	ST	564	Underground	Streetlighting	Pole	POLE METAL =>25FT	Active	0	90435-67003	S14	CITY OF PAWTUCKET
0005	000	1	PLEASANT	ST	564	Underground	Streetlighting	Luminaire	LUM HPS RWY 250W	Active	250	90435-67003	S14	CITY OF PAWTUCKET
0006	000	0	PLEASANT	ST	564	Underground	Streetlighting	Pole	POLE METAL =>25FT	Active	0	90435-67003	S14	CITY OF PAWTUCKET
0006	000	1	PLEASANT	ST	564	Underground	Streetlighting	Luminaire	LUM HPS RWY 250W	Active	250	90435-67003	S14	CITY OF PAWTUCKET
0007	000	0	PLEASANT	ST	564	Underground	Streetlighting	Pole	POLE METAL =>25FT	Active	0	90435-67003	S14	CITY OF PAWTUCKET
0007	000	1	PLEASANT	ST	564	Underground	Streetlighting	Luminaire	LUM HPS RWY 250W	Active	250	90435-67003	S14	CITY OF PAWTUCKET
0010	000	0	PLEASANT	ST	564	Underground	Streetlighting	Pole	POLE METAL =>25FT	Active	0	90435-67003	S14	CITY OF PAWTUCKET
0010	000	1	PLEASANT	ST	564	Underground	Streetlighting	Luminaire	LUM HPS RWY 250W	Active	250	90435-67003	S14	CITY OF PAWTUCKET
0011	000	0	PLEASANT	ST	564	Underground	Streetlighting	Pole	POLE METAL =>25FT	Active	0	90435-67003	S14	CITY OF PAWTUCKET
0011	000	1	PLEASANT	ST	564	Underground	Streetlighting	Luminaire	LUM HPS RWY 250W	Active	250	90435-67003	S14	CITY OF PAWTUCKET
0012	000	1	PLEASANT	ST	564	Overhead	Distribution	Luminaire	LUM HPS RWY 100W	Active	100	90435-67003	S14	CITY OF PAWTUCKET
0012	001	1	PLEASANT	ST	564	Overhead	Distribution	Luminaire	LUM HPS RWY 250W	Active	250	90435-67003	S14	CITY OF PAWTUCKET
0012	002	1	PLEASANT	ST	564	Overhead	Distribution	Luminaire	LUM HPS RWY 250W	Active	250	90435-67003	S14	CITY OF PAWTUCKET
0013	000	1	PLEASANT	ST	564	Overhead	Distribution	Luminaire	LUM HPS RWY 250W	Active	250	90435-67003	S14	CITY OF PAWTUCKET
0018	000	1	PLEASANT	ST	564	Overhead	Distribution	Luminaire	LUM HPS RWY 100W	Active	100	90435-67003	S14	CITY OF PAWTUCKET
0019	000	1	PLEASANT	ST	564	Overhead	Distribution	Luminaire	LUM HPS RWY 70W	Active	70	90435-67003	S14	CITY OF PAWTUCKET
0021	000	1	PLEASANT	ST	564	Overhead	Distribution	Luminaire	LUM HPS RWY 100W	Active	100	90435-67003	S14	CITY OF PAWTUCKET
0022	000	1	PLEASANT	ST	564	Overhead	Distribution	Luminaire	LUM HPS RWY 100W	Active	100	90435-67003	S14	CITY OF PAWTUCKET
0024	001	1	PLEASANT	ST	564	Overhead	Distribution	Luminaire	LUM HPS RWY 100W	Active	100	90435-67003	S14	CITY OF PAWTUCKET
0025	000	1	PLEASANT	ST	564	Overhead	Distribution	Luminaire	LUM HPS RWY 100W	Active	100	90435-67003	S14	CITY OF PAWTUCKET
0026	000	1	PLEASANT	ST	564	Overhead	Distribution	Luminaire	LUM HPS RWY 100W	Active	100	90435-67003	S14	CITY OF PAWTUCKET
0027	000	1	PLEASANT	ST	564	Overhead	Distribution	Luminaire	LUM HPS RWY 100W	Active	100	90435-67003	S14	CITY OF PAWTUCKET
0029	001	1	PLEASANT	ST	564	Overhead	Distribution	Luminaire	LUM HPS RWY 70W	Active	70	90435-67003	S14	CITY OF PAWTUCKET
0030	000	1	PLEASANT	ST	564	Overhead	Distribution	Luminaire	LUM HPS RWY 100W	Active	100	90435-67003	S14	CITY OF PAWTUCKET
0032	000	1	PLEASANT	ST	564	Overhead	Distribution	Luminaire	LUM HPS RWY 100W	Active	100	90435-67003	S14	CITY OF PAWTUCKET

0036	000	1	PLEASANT	ST	564	Overhead	Distribution	Luminaire	LUM HPS RWY 100W	Active	100	90435-67003	S14	CITY OF PAWTUCKET
0039	000	1	PLEASANT	ST	564	Overhead	Distribution	Luminaire	LUM HPS RWY 50W	Active	50	90435-67003	S14	CITY OF PAWTUCKET
0041	000	1	PLEASANT	ST	564	Overhead	Distribution	Luminaire	LUM HPS RWY 100W	Active	100	90435-67003	S14	CITY OF PAWTUCKET
0046	000	1	PLEASANT	ST	564	Overhead	Distribution	Luminaire	LUM HPS RWY 70W	Active	70	90435-67003	S14	CITY OF PAWTUCKET
0048	000	1	PLEASANT	ST	564	Overhead	Distribution	Luminaire	LUM HPS RWY 100W	Active	100	90435-67003	S14	CITY OF PAWTUCKET
0050	000	1	PLEASANT	ST	564	Overhead	Distribution	Luminaire	LUM HPS RWY 100W	Active	100	90435-67003	S14	CITY OF PAWTUCKET
0052	000	1	PLEASANT	ST	564	Overhead	Distribution	Luminaire	LUM HPS RWY 100W	Active	100	90435-67003	S14	CITY OF PAWTUCKET
0055	000	1	PLEASANT	ST	564	Overhead	Distribution	Luminaire	LUM HPS RWY 100W	Active	100	90435-67003	S14	CITY OF PAWTUCKET
0056	000	1	PLEASANT	ST	564	Overhead	Distribution	Luminaire	LUM HPS FLD 400W	Active	400	90435-66006	S14	PAWTUCKET SCH DEPT
0056	000	2	PLEASANT	ST	564	Overhead	Distribution	Luminaire	LUM HPS RWY 100W	Active	100	90435-67003	S14	CITY OF PAWTUCKET
0057	000	1	PLEASANT	ST	564	Overhead	Distribution	Luminaire	LUM HPS RWY 100W	Active	100	90435-67003	S14	CITY OF PAWTUCKET
0060	000	1	PLEASANT	ST	564	Overhead	Distribution	Luminaire	LUM HPS RWY 100W	Active	100	90435-67003	S14	CITY OF PAWTUCKET
0061	000	1	PLEASANT	ST	564	Overhead	Distribution	Luminaire	LUM HPS RWY 100W	Active	100	90435-67003	S14	CITY OF PAWTUCKET
0062	011	1	PLEASANT	ST	564	Overhead	Distribution	Luminaire	LUM HPS FLD 400W	Active	400	3371-64002	S14	CITY OF PAWTUCKET
0063	000	1	PLEASANT	ST	564	Overhead	Distribution	Luminaire	LUM HPS RWY 100W	Active	100	90435-67003	S14	CITY OF PAWTUCKET
0064	000	1	PLEASANT	ST	564	Overhead	Distribution	Luminaire	LUM HPS RWY 100W	Active	100	90435-67003	S14	CITY OF PAWTUCKET
0065	000	1	PLEASANT	ST	564	Overhead	Distribution	Luminaire	LUM HPS RWY 100W	Active	100	90435-67003	S14	CITY OF PAWTUCKET
0067	000	1	PLEASANT	ST	564	Overhead	Distribution	Luminaire	LUM HPS RWY 100W	Active	100	90435-67003	S14	CITY OF PAWTUCKET
0069	000	1	PLEASANT	ST	564	Overhead	Distribution	Luminaire	LUM HPS RWY 100W	Active	100	90435-67003	S14	CITY OF PAWTUCKET
0071	000	1	PLEASANT	ST	564	Overhead	Distribution	Luminaire	LUM HPS RWY 100W	Active	100	90435-67003	S14	CITY OF PAWTUCKET
0074	000	1	PLEASANT	ST	564	Overhead	Distribution	Luminaire	LUM HPS RWY 70W	Active	70	90435-67003	S14	CITY OF PAWTUCKET
0075	000	1	PLEASANT	ST	564	Overhead	Distribution	Luminaire	LUM HPS RWY 70W	Active	70	90435-67003	S14	CITY OF PAWTUCKET
0077	000	1	PLEASANT	ST	564	Overhead	Distribution	Luminaire	LUM HPS RWY 100W	Active	100	90435-67003	S14	CITY OF PAWTUCKET
0079	000	1	PLEASANT	ST	564	Overhead	Distribution	Luminaire	LUM HPS RWY 70W	Active	70	90435-67003	S14	CITY OF PAWTUCKET
0081	000	1	PLEASANT	ST	564	Overhead	Distribution	Luminaire	LUM HPS RWY 100W	Active	100	90435-67003	S14	CITY OF PAWTUCKET
0083	000	1	PLEASANT	ST	564	Overhead	Distribution	Luminaire	LUM HPS RWY 100W	Active	100	90435-67003	S14	CITY OF PAWTUCKET
0084	000	1	PLEASANT	ST	564	Overhead	Distribution	Luminaire	LUM HPS RWY 100W	Active	100	90435-67003	S14	CITY OF PAWTUCKET
0085	000	1	PLEASANT	ST	564	Overhead	Distribution	Luminaire	LUM HPS RWY 100W	Active	100	90435-67003	S14	CITY OF PAWTUCKET
0002	000	1	POIRIER	ST	565	Overhead	Distribution	Luminaire	LUM HPS RWY 70W	Active	70	90435-67003	S14	CITY OF PAWTUCKET
0005	000	1	POIRIER	ST	565	Overhead	Distribution	Luminaire	LUM HPS RWY 70W	Active	70	90435-67003	S14	CITY OF PAWTUCKET
0006	000	1	POIRIER	ST	565	Overhead	Distribution	Luminaire	LUM HPS RWY 70W	Active	70	90435-67003	S14	CITY OF PAWTUCKET
0001	000	1	POLLARD	AVE	566	Overhead	Distribution	Luminaire	LUM HPS RWY 70W	Active	70	90435-67003	S14	CITY OF PAWTUCKET
0003	000	1	POLLARD	AVE	566	Overhead	Distribution	Luminaire	LUM HPS RWY 70W	Active	70	90435-67003	S14	CITY OF PAWTUCKET
0005	000	1	POLLARD	AVE	566	Overhead	Distribution	Luminaire	LUM HPS RWY 70W	Active	70	90435-67003	S14	CITY OF PAWTUCKET
0006	000	1	POLLARD	AVE	566	Overhead	Distribution	Luminaire	LUM HPS RWY 70W	Active	70	90435-67003	S14	CITY OF PAWTUCKET
0008	000	1	POLLARD	AVE	566	Overhead	Distribution	Luminaire	LUM HPS RWY 70W	Active	70	90435-67003	S14	CITY OF PAWTUCKET
0002	000	1	POLO	ST	567	Overhead	Distribution	Luminaire	LUM HPS RWY 70W	Active	70	90435-67003	S14	CITY OF PAWTUCKET
0003	000	1	POLO	ST	567	Overhead	Distribution	Luminaire	LUM HPS FLD 250W	Active	250	3371-64002	S14	CITY OF PAWTUCKET
0004	000	1	POLO	ST	567	Overhead	Distribution	Luminaire	LUM HPS RWY 70W	Active	70	90435-67003	S14	CITY OF PAWTUCKET
0001	000	1	POMMENVILLE	ST	568	Overhead	Distribution	Luminaire	LUM HPS RWY 70W	Active	70	90435-67003	S14	CITY OF PAWTUCKET
0001	000	1	POND	ST	569	Overhead	Distribution	Luminaire	LUM HPS RWY 250W	Active	250	90435-67003	S14	CITY OF PAWTUCKET
0002	000	1	POND	ST	569	Overhead	Distribution	Luminaire	LUM HPS RWY 100W	Active	100	90435-67003	S14	CITY OF PAWTUCKET
0003	000	1	POND	ST	569	Overhead	Distribution	Luminaire	LUM HPS RWY 100W	Active	100	90435-67003	S14	CITY OF PAWTUCKET
0003	001	1	POND	ST	569	Overhead	Distribution	Luminaire	LUM HPS RWY 100W	Active	100	90435-67003	S14	CITY OF PAWTUCKET
0004	000	1	POND	ST	569	Overhead	Distribution	Luminaire	LUM HPS RWY 100W	Active	100	90435-67003	S14	CITY OF PAWTUCKET
0005	000	1	POND	ST	569	Overhead	Distribution	Luminaire	LUM HPS RWY 100W	Active	100	90435-67003	S14	CITY OF PAWTUCKET
0006	000	1	POND	ST	569	Overhead	Distribution	Luminaire	LUM HPS RWY 100W	Active	100	90435-67003	S14	CITY OF PAWTUCKET
0007	000	1	POND	ST	569	Overhead	Distribution	Luminaire	LUM HPS RWY 100W	Active	100	90435-67003	S14	CITY OF PAWTUCKET
0008	000	1	POND	ST	569	Overhead	Distribution	Luminaire	LUM HPS RWY 100W	Active	100	90435-67003	S14	CITY OF PAWTUCKET
0009	000	1	POND	ST	569	Overhead	Distribution	Luminaire	LUM HPS RWY 100W	Active	100	90435-67003	S14	CITY OF PAWTUCKET
0010	000	1	POND	ST	569	Overhead	Distribution	Luminaire	LUM HPS RWY 100W	Active	100	90435-67003	S14	CITY OF PAWTUCKET
0010	001	1	POND	ST	569	Overhead	Distribution	Luminaire	LUM HPS RWY 100W	Active	100	90435-67003	S14	CITY OF PAWTUCKET
0011	000	1	POND	ST	569	Overhead	Distribution	Luminaire	LUM HPS RWY 100W	Active	100	90435-67003	S14	CITY OF PAWTUCKET
0013	000	1	POND	ST	569	Overhead	Distribution	Luminaire	LUM HPS RWY 70W	Active	70	90435-67003	S14	CITY OF PAWTUCKET
0017	000	1	POND	ST	569	Overhead	Distribution	Luminaire	LUM HPS RWY 100W	Active	100	90435-67003	S14	CITY OF PAWTUCKET
0019	000	1	POND	ST	569	Overhead	Distribution	Luminaire	LUM HPS RWY 250W	Active	250	90435-67003	S14	CITY OF PAWTUCKET
0003	000	1	POTTER	ST	570	Overhead	Distribution	Luminaire	LUM HPS RWY 70W	Active	70	90435-67003	S14	CITY OF PAWTUCKET
0005	000	1	POTTER	ST	570	Overhead	Distribution	Luminaire	LUM HPS RWY 70W	Active	70	90435-67003	S14	CITY OF PAWTUCKET
0006	000	1	POTTER	ST	570	Overhead	Distribution	Luminaire	LUM HPS RWY 70W	Active	70	90435-67003	S14	CITY OF PAWTUCKET
0007	000	1	POTTER	ST	570	Overhead	Distribution	Luminaire	LUM HPS RWY 70W	Active	70	90435-67003	S14	CITY OF PAWTUCKET
0009	000	1	POTTER	ST	570	Overhead	Distribution	Luminaire	LUM HPS RWY 70W	Active	70	90435-67003	S14	CITY OF PAWTUCKET
0001	000	1	POWER	RD	571	Overhead	Distribution	Luminaire	LUM HPS RWY 250W	Active	250	90435-67003	S14	CITY OF PAWTUCKET
0002	000	1	POWER	RD	571	Overhead	Distribution	Luminaire	LUM HPS RWY 100W	Active	100	90435-67003	S14	CITY OF PAWTUCKET

0003	000	1	POWER	RD	571	Overhead	Distribution	Luminaire	LUM HPS RWY 100W	Active	100	90435-67003	S14	CITY OF PAWTUCKET
0004	000	1	POWER	RD	571	Overhead	Distribution	Luminaire	LUM HPS RWY 100W	Active	100	90435-67003	S14	CITY OF PAWTUCKET
0006	000	1	POWER	RD	571	Overhead	Distribution	Luminaire	LUM HPS RWY 100W	Active	100	90435-67003	S14	CITY OF PAWTUCKET
0008	000	1	POWER	RD	571	Overhead	Distribution	Luminaire	LUM HPS RWY 100W	Active	100	90435-67003	S14	CITY OF PAWTUCKET
0009	000	1	POWER	RD	571	Overhead	Distribution	Luminaire	LUM HPS RWY 100W	Active	100	90435-67003	S14	CITY OF PAWTUCKET
0010	000	1	POWER	RD	571	Overhead	Distribution	Luminaire	LUM HPS RWY 100W	Active	100	90435-67003	S14	CITY OF PAWTUCKET
0011	000	1	POWER	RD	571	Overhead	Distribution	Luminaire	LUM HPS RWY 100W	Active	100	90435-67003	S14	CITY OF PAWTUCKET
0012	000	1	POWER	RD	571	Overhead	Distribution	Luminaire	LUM HPS RWY 100W	Active	100	90435-67003	S14	CITY OF PAWTUCKET
0013	000	2	POWER	RD	571	Overhead	Distribution	Luminaire	LUM HPS RWY 100W	Active	100	90435-67003	S14	CITY OF PAWTUCKET
0015	000	1	POWER	RD	571	Overhead	Distribution	Luminaire	LUM HPS RWY 100W	Active	100	90435-67003	S14	CITY OF PAWTUCKET
0017	000	1	POWER	RD	571	Overhead	Distribution	Luminaire	LUM HPS RWY 100W	Active	100	90435-67003	S14	CITY OF PAWTUCKET
0019	000	1	POWER	RD	571	Overhead	Distribution	Luminaire	LUM HPS RWY 100W	Active	100	90435-67003	S14	CITY OF PAWTUCKET
0020	000	1	POWER	RD	571	Overhead	Distribution	Luminaire	LUM HPS RWY 100W	Active	100	90435-67003	S14	CITY OF PAWTUCKET
0021	000	1	POWER	RD	571	Overhead	Distribution	Luminaire	LUM HPS RWY 100W	Active	100	90435-67003	S14	CITY OF PAWTUCKET
0023	000	1	POWER	RD	571	Overhead	Distribution	Luminaire	LUM HPS RWY 100W	Active	100	90435-67003	S14	CITY OF PAWTUCKET
0026	000	1	POWER	RD	571	Overhead	Distribution	Luminaire	LUM HPS RWY 100W	Active	100	90435-67003	S14	CITY OF PAWTUCKET
0027	000	1	POWER	RD	571	Overhead	Distribution	Luminaire	LUM HPS RWY 100W	Active	100	90435-67003	S14	CITY OF PAWTUCKET
0028	001	1	POWER	RD	571	Overhead	Distribution	Luminaire	LUM HPS RWY 100W	Active	100	90435-67003	S14	CITY OF PAWTUCKET
0031	000	1	POWER	RD	571	Overhead	Distribution	Luminaire	LUM HPS RWY 100W	Active	100	90435-67003	S14	CITY OF PAWTUCKET
0033	000	1	POWER	RD	571	Overhead	Distribution	Luminaire	LUM HPS RWY 100W	Active	100	90435-67003	S14	CITY OF PAWTUCKET
0034	000	1	POWER	RD	571	Overhead	Distribution	Luminaire	LUM HPS RWY 100W	Active	100	90435-67003	S14	CITY OF PAWTUCKET
0035	000	1	POWER	RD	571	Overhead	Distribution	Luminaire	LUM HPS RWY 100W	Active	100	90435-67003	S14	CITY OF PAWTUCKET
0036	000	1	POWER	RD	571	Overhead	Distribution	Luminaire	LUM HPS RWY 100W	Active	100	90435-67003	S14	CITY OF PAWTUCKET
0037	000	1	POWER	RD	571	Overhead	Distribution	Luminaire	LUM HPS RWY 100W	Active	100	90435-67003	S14	CITY OF PAWTUCKET
0039	000	1	POWER	RD	571	Overhead	Distribution	Luminaire	LUM HPS RWY 100W	Active	100	90435-67003	S14	CITY OF PAWTUCKET
0042	000	1	POWER	RD	571	Overhead	Distribution	Luminaire	LUM HPS RWY 100W	Active	100	90435-67003	S14	CITY OF PAWTUCKET
0043	000	1	POWER	RD	571	Overhead	Distribution	Luminaire	LUM HPS RWY 100W	Active	100	90435-67003	S14	CITY OF PAWTUCKET
0046	000	1	POWER	RD	571	Overhead	Distribution	Luminaire	LUM HPS RWY 100W	Active	100	90435-67003	S14	CITY OF PAWTUCKET
0047	000	1	POWER	RD	571	Overhead	Distribution	Luminaire	LUM HPS RWY 100W	Active	100	90435-67003	S14	CITY OF PAWTUCKET
0047	001	1	POWER	RD	571	Overhead	Distribution	Luminaire	LUM HPS RWY 100W	Active	100	90435-67003	S14	CITY OF PAWTUCKET
0048	000	1	POWER	RD	571	Overhead	Distribution	Luminaire	LUM HPS RWY 100W	Active	100	90435-67003	S14	CITY OF PAWTUCKET
0049	000	1	POWER	RD	571	Overhead	Distribution	Luminaire	LUM HPS RWY 100W	Active	100	90435-67003	S14	CITY OF PAWTUCKET
0050	000	1	POWER	RD	571	Overhead	Distribution	Luminaire	LUM HPS RWY 100W	Active	100	90435-67003	S14	CITY OF PAWTUCKET
0051	000	1	POWER	RD	571	Overhead	Distribution	Luminaire	LUM HPS RWY 100W	Active	100	90435-67003	S14	CITY OF PAWTUCKET
0052	000	1	POWER	RD	571	Overhead	Distribution	Luminaire	LUM HPS RWY 100W	Active	100	90435-67003	S14	CITY OF PAWTUCKET
0054	000	1	POWER	RD	571	Overhead	Distribution	Luminaire	LUM HPS RWY 70W	Active	70	90435-67003	S14	CITY OF PAWTUCKET
0055	000	1	POWER	RD	571	Overhead	Distribution	Luminaire	LUM HPS RWY 100W	Active	100	90435-67003	S14	CITY OF PAWTUCKET
0056	000	1	POWER	RD	571	Overhead	Distribution	Luminaire	LUM HPS RWY 100W	Active	100	90435-67003	S14	CITY OF PAWTUCKET
0057	000	1	POWER	RD	571	Overhead	Distribution	Luminaire	LUM HPS RWY 100W	Active	100	90435-67003	S14	CITY OF PAWTUCKET
0058	000	1	POWER	RD	571	Overhead	Distribution	Luminaire	LUM HPS RWY 100W	Active	100	90435-67003	S14	CITY OF PAWTUCKET
0060	000	1	POWER	RD	571	Overhead	Distribution	Luminaire	LUM HPS RWY 100W	Active	100	90435-67003	S14	CITY OF PAWTUCKET
0061	000	1	POWER	RD	571	Overhead	Distribution	Luminaire	LUM HPS RWY 100W	Active	100	90435-67003	S14	CITY OF PAWTUCKET
0062	000	1	POWER	RD	571	Overhead	Distribution	Luminaire	LUM HPS RWY 100W	Active	100	90435-67003	S14	CITY OF PAWTUCKET
0063	000	1	POWER	RD	571	Overhead	Distribution	Luminaire	LUM HPS RWY 100W	Active	100	90435-67003	S14	CITY OF PAWTUCKET
0064	000	1	POWER	RD	571	Overhead	Distribution	Luminaire	LUM HPS RWY 100W	Active	100	90435-67003	S14	CITY OF PAWTUCKET
0065	000	1	POWER	RD	571	Overhead	Distribution	Luminaire	LUM HPS RWY 100W	Active	100	90435-67003	S14	CITY OF PAWTUCKET
0066	000	1	POWER	RD	571	Overhead	Distribution	Luminaire	LUM HPS RWY 250W	Active	250	90435-67003	S14	CITY OF PAWTUCKET
0067	000	1	POWER	RD	571	Overhead	Distribution	Luminaire	LUM HPS RWY 100W	Active	100	90435-67003	S14	CITY OF PAWTUCKET
0068	000	1	POWER	RD	571	Overhead	Distribution	Luminaire	LUM HPS RWY 100W	Active	100	90435-67003	S14	CITY OF PAWTUCKET
0069	000	1	POWER	RD	571	Overhead	Distribution	Luminaire	LUM HPS RWY 100W	Active	100	90435-67003	S14	CITY OF PAWTUCKET
0070	000	1	POWER	RD	571	Overhead	Distribution	Luminaire	LUM HPS RWY 100W	Active	100	90435-67003	S14	CITY OF PAWTUCKET
0071	000	1	POWER	RD	571	Overhead	Distribution	Luminaire	LUM HPS RWY 100W	Active	100	90435-67003	S14	CITY OF PAWTUCKET
0072	000	1	POWER	RD	571	Overhead	Distribution	Luminaire	LUM HPS RWY 100W	Active	100	90435-67003	S14	CITY OF PAWTUCKET
0073	000	1	POWER	RD	571	Overhead	Distribution	Luminaire	LUM HPS RWY 100W	Active	100	90435-67003	S14	CITY OF PAWTUCKET
0074	000	1	POWER	RD	571	Overhead	Distribution	Luminaire	LUM HPS RWY 100W	Active	100	90435-67003	S14	CITY OF PAWTUCKET
0076	000	1	POWER	RD	571	Overhead	Distribution	Luminaire	LUM HPS RWY 100W	Active	100	90435-67003	S14	CITY OF PAWTUCKET
0003	000	1	PRENETA	ST	572	Overhead	Distribution	Luminaire	LUM HPS RWY 70W	Active	70	90435-67003	S14	CITY OF PAWTUCKET
0001	001	1	PRENTICE	AVE	573	Overhead	Distribution	Luminaire	LUM HPS RWY 70W	Active	70	90435-67003	S14	CITY OF PAWTUCKET
0003	000	1	PRENTICE	AVE	573	Overhead	Distribution	Luminaire	LUM HPS RWY 70W	Active	70	90435-67003	S14	CITY OF PAWTUCKET
0004	000	1	PRENTICE	AVE	573	Overhead	Distribution	Luminaire	LUM HPS RWY 70W	Active	70	90435-67003	S14	CITY OF PAWTUCKET
0007	000	1	PRENTICE	AVE	573	Overhead	Distribution	Luminaire	LUM HPS RWY 70W	Active	70	90435-67003	S14	CITY OF PAWTUCKET
0009	000	1	PRENTICE	AVE	573	Overhead	Distribution	Luminaire	LUM HPS RWY 70W	Active	70	90435-67003	S14	CITY OF PAWTUCKET
0011	000	1	PRENTICE	AVE	573	Overhead	Distribution	Luminaire	LUM HPS RWY 70W	Active	70	90435-67003	S14	CITY OF PAWTUCKET

0003	000	1	PRIMROSE	ST	574	Overhead	Distribution	Luminaire	LUM HPS RWY 70W	Active	70	90435-67003	S14	CITY OF PAWTUCKET
0005	000	1	PRIMROSE	ST	574	Overhead	Distribution	Luminaire	LUM HPS RWY 70W	Active	70	90435-67003	S14	CITY OF PAWTUCKET
0007	000	1	PRIMROSE	ST	574	Overhead	Distribution	Luminaire	LUM HPS RWY 70W	Active	70	90435-67003	S14	CITY OF PAWTUCKET
0003	000	1	PRINCE	ST	575	Overhead	Distribution	Luminaire	LUM HPS RWY 70W	Active	70	90435-67003	S14	CITY OF PAWTUCKET
0005	000	1	PRINCE	ST	575	Overhead	Distribution	Luminaire	LUM HPS RWY 70W	Active	70	90435-67003	S14	CITY OF PAWTUCKET
0007	000	1	PRINCE	ST	575	Overhead	Distribution	Luminaire	LUM HPS RWY 70W	Active	70	90435-67003	S14	CITY OF PAWTUCKET
0002	000	1	PRINCETON	AVE	576	Overhead	Distribution	Luminaire	LUM HPS RWY 70W	Active	70	90435-67003	S14	CITY OF PAWTUCKET
0004	000	1	PRINCETON	AVE	576	Overhead	Distribution	Luminaire	LUM HPS RWY 70W	Active	70	90435-67003	S14	CITY OF PAWTUCKET
0001	000	1	PRIVET	ST	577	Overhead	Distribution	Luminaire	LUM HPS RWY 70W	Active	70	90435-67003	S14	CITY OF PAWTUCKET
0003	000	1	PRIVET	ST	577	Overhead	Distribution	Luminaire	LUM HPS RWY 70W	Active	70	90435-67003	S14	CITY OF PAWTUCKET
0004	000	1	PRIVET	ST	577	Overhead	Distribution	Luminaire	LUM HPS FLD 400W	Active	400	90435-67003	S14	CITY OF PAWTUCKET
0005	000	1	PRIVET	ST	577	Overhead	Distribution	Luminaire	LUM HPS FLD 400W	Active	400	3371-62008	S14	PAWTUCKET HOUSING AUTHORITY
0005	000	2	PRIVET	ST	577	Overhead	Distribution	Luminaire	LUM HPS RWY 70W	Active	70	90435-67003	S14	CITY OF PAWTUCKET
0001	000	1	PROGRESS	ST	578	Overhead	Distribution	Luminaire	LUM HPS RWY 70W	Active	70	90435-67003	S14	CITY OF PAWTUCKET
0003	000	1	PROGRESS	ST	578	Overhead	Distribution	Luminaire	LUM HPS RWY 70W	Active	70	90435-67003	S14	CITY OF PAWTUCKET
0005	000	1	PROGRESS	ST	578	Overhead	Distribution	Luminaire	LUM HPS RWY 70W	Active	70	90435-67003	S14	CITY OF PAWTUCKET
0009	000	1	PROGRESS	ST	578	Overhead	Distribution	Luminaire	LUM HPS RWY 70W	Active	70	90435-67003	S14	CITY OF PAWTUCKET
0010	000	1	PROGRESS	ST	578	Overhead	Distribution	Luminaire	LUM HPS RWY 70W	Active	70	90435-67003	S14	CITY OF PAWTUCKET
0012	000	1	PROGRESS	ST	578	Overhead	Distribution	Luminaire	LUM HPS RWY 70W	Active	70	90435-67003	S14	CITY OF PAWTUCKET
0013	000	1	PROGRESS	ST	578	Overhead	Distribution	Luminaire	LUM HPS RWY 70W	Active	70	90435-67003	S14	CITY OF PAWTUCKET
0015	000	1	PROGRESS	ST	578	Overhead	Distribution	Luminaire	LUM HPS RWY 70W	Active	70	90435-67003	S14	CITY OF PAWTUCKET
0002	000	1	PROSPECT	ST	579	Overhead	Distribution	Luminaire	LUM HPS RWY 250W	Active	250	90435-67003	S14	CITY OF PAWTUCKET
0003	000	1	PROSPECT	ST	579	Overhead	Distribution	Luminaire	LUM HPS RWY 250W	Active	250	90435-67003	S14	CITY OF PAWTUCKET
0004	000	1	PROSPECT	ST	579	Overhead	Distribution	Luminaire	LUM HPS RWY 250W	Active	250	90435-67003	S14	CITY OF PAWTUCKET
0005	000	1	PROSPECT	ST	579	Overhead	Distribution	Luminaire	LUM HPS RWY 250W	Active	250	90435-67003	S14	CITY OF PAWTUCKET
0007	000	1	PROSPECT	ST	579	Overhead	Distribution	Luminaire	LUM HPS RWY 100W	Active	100	90435-67003	S14	CITY OF PAWTUCKET
0008	000	1	PROSPECT	ST	579	Overhead	Distribution	Luminaire	LUM HPS RWY 100W	Active	100	90435-67003	S14	CITY OF PAWTUCKET
0009	000	1	PROSPECT	ST	579	Overhead	Distribution	Luminaire	LUM HPS RWY 100W	Active	100	90435-67003	S14	CITY OF PAWTUCKET
0010	000	1	PROSPECT	ST	579	Overhead	Distribution	Luminaire	LUM HPS RWY 100W	Active	100	90435-67003	S14	CITY OF PAWTUCKET
0011	000	1	PROSPECT	ST	579	Overhead	Distribution	Luminaire	LUM HPS RWY 100W	Active	100	90435-67003	S14	CITY OF PAWTUCKET
0012	000	1	PROSPECT	ST	579	Overhead	Distribution	Luminaire	LUM HPS RWY 100W	Active	100	90435-67003	S14	CITY OF PAWTUCKET
0013	000	1	PROSPECT	ST	579	Overhead	Distribution	Luminaire	LUM HPS RWY 250W	Active	250	90435-67003	S14	CITY OF PAWTUCKET
0014	000	1	PROSPECT	ST	579	Overhead	Distribution	Luminaire	LUM HPS RWY 250W	Active	250	90435-67003	S14	CITY OF PAWTUCKET
0015	000	1	PROSPECT	ST	579	Overhead	Distribution	Luminaire	LUM HPS RWY 100W	Active	100	90435-67003	S14	CITY OF PAWTUCKET
0016	001	1	PROSPECT	ST	579	Overhead	Distribution	Luminaire	LUM HPS RWY 100W	Active	100	90435-67003	S14	CITY OF PAWTUCKET
0017	001	1	PROSPECT	ST	579	Overhead	Distribution	Luminaire	LUM HPS RWY 100W	Active	100	90435-67003	S14	CITY OF PAWTUCKET
0018	001	1	PROSPECT	ST	579	Overhead	Distribution	Luminaire	LUM HPS RWY 100W	Active	100	90435-67003	S14	CITY OF PAWTUCKET
0019	000	1	PROSPECT	ST	579	Overhead	Distribution	Luminaire	LUM HPS RWY 100W	Active	100	90435-67003	S14	CITY OF PAWTUCKET
0020	001	1	PROSPECT	ST	579	Overhead	Distribution	Luminaire	LUM HPS RWY 250W	Active	250	90435-67003	S14	CITY OF PAWTUCKET
0021	001	1	PROSPECT	ST	579	Overhead	Distribution	Luminaire	LUM HPS RWY 250W	Active	250	90435-67003	S14	CITY OF PAWTUCKET
0022	001	1	PROSPECT	ST	579	Overhead	Distribution	Luminaire	LUM HPS RWY 250W	Active	250	90435-67003	S14	CITY OF PAWTUCKET
0023	000	1	PROSPECT	ST	579	Overhead	Distribution	Luminaire	LUM HPS RWY 250W	Active	250	90435-67003	S14	CITY OF PAWTUCKET
0024	001	1	PROSPECT	ST	579	Overhead	Distribution	Luminaire	LUM HPS RWY 100W	Active	100	90435-67003	S14	CITY OF PAWTUCKET
0025	000	1	PROSPECT	ST	579	Overhead	Distribution	Luminaire	LUM HPS RWY 250W	Active	250	90435-67003	S14	CITY OF PAWTUCKET
0026	001	1	PROSPECT	ST	579	Overhead	Distribution	Luminaire	LUM HPS RWY 100W	Active	100	90435-67003	S14	CITY OF PAWTUCKET
0027	000	1	PROSPECT	ST	579	Overhead	Distribution	Luminaire	LUM HPS RWY 100W	Active	100	90435-67003	S14	CITY OF PAWTUCKET
0028	000	1	PROSPECT	ST	579	Overhead	Distribution	Luminaire	LUM HPS RWY 250W	Active	250	90435-67003	S14	CITY OF PAWTUCKET
0029	001	1	PROSPECT	ST	579	Overhead	Distribution	Luminaire	LUM HPS RWY 100W	Active	100	90435-67003	S14	CITY OF PAWTUCKET
0030	000	1	PROSPECT	ST	579	Overhead	Distribution	Luminaire	LUM HPS RWY 250W	Active	250	90435-67003	S14	CITY OF PAWTUCKET
0031	001	1	PROSPECT	ST	579	Overhead	Distribution	Luminaire	LUM HPS RWY 100W	Active	100	90435-67003	S14	CITY OF PAWTUCKET
0033	000	1	PROSPECT	ST	579	Overhead	Distribution	Luminaire	LUM HPS RWY 250W	Active	250	90435-67003	S14	CITY OF PAWTUCKET
0034	001	1	PROSPECT	ST	579	Overhead	Distribution	Luminaire	LUM HPS RWY 250W	Active	250	90435-67003	S14	CITY OF PAWTUCKET
0035	000	1	PROSPECT	ST	579	Overhead	Distribution	Luminaire	LUM HPS RWY 250W	Active	250	90435-67003	S14	CITY OF PAWTUCKET
0036	001	1	PROSPECT	ST	579	Overhead	Distribution	Luminaire	LUM HPS RWY 250W	Active	250	90435-67003	S14	CITY OF PAWTUCKET
0037	000	1	PROSPECT	ST	579	Overhead	Distribution	Luminaire	LUM HPS RWY 250W	Active	250	90435-67003	S14	CITY OF PAWTUCKET
0038	001	1	PROSPECT	ST	579	Overhead	Distribution	Luminaire	LUM HPS RWY 250W	Active	250	90435-67003	S14	CITY OF PAWTUCKET
0039	000	1	PROSPECT	ST	579	Overhead	Distribution	Luminaire	LUM HPS RWY 250W	Active	250	90435-67003	S14	CITY OF PAWTUCKET
0040	001	1	PROSPECT	ST	579	Overhead	Distribution	Luminaire	LUM HPS RWY 250W	Active	250	90435-67003	S14	CITY OF PAWTUCKET
0041	000	1	PROSPECT	ST	579	Overhead	Distribution	Luminaire	LUM HPS RWY 250W	Active	250	90435-67003	S14	CITY OF PAWTUCKET
0042	001	1	PROSPECT	ST	579	Overhead	Distribution	Luminaire	LUM HPS RWY 250W	Active	250	90435-67003	S14	CITY OF PAWTUCKET
0043	000	1	PROSPECT	ST	579	Overhead	Distribution	Luminaire	LUM HPS RWY 250W	Active	250	90435-67003	S14	CITY OF PAWTUCKET
0044	000	1	PROSPECT	ST	579	Overhead	Distribution	Luminaire	LUM HPS RWY 250W	Active	250	90435-67003	S14	CITY OF PAWTUCKET
0045	001	1	PROSPECT	ST	579	Overhead	Distribution	Luminaire	LUM HPS RWY 250W	Active	250	90435-67003	S14	CITY OF PAWTUCKET

0046	000	1	PROSPECT	ST	579	Overhead	Distribution	Luminaire	LUM HPS RWY 250W	Active	250	90435-67003	S14	CITY OF PAWTUCKET
0047	001	1	PROSPECT	ST	579	Overhead	Distribution	Luminaire	LUM HPS RWY 100W	Active	100	90435-67003	S14	CITY OF PAWTUCKET
0048	001	1	PROSPECT	ST	579	Overhead	Distribution	Luminaire	LUM HPS RWY 100W	Active	100	90435-67003	S14	CITY OF PAWTUCKET
0049	000	1	PROSPECT	ST	579	Overhead	Distribution	Luminaire	LUM HPS RWY 100W	Active	100	90435-67003	S14	CITY OF PAWTUCKET
0050	001	1	PROSPECT	ST	579	Overhead	Distribution	Luminaire	LUM HPS RWY 100W	Active	100	90435-67003	S14	CITY OF PAWTUCKET
0051	000	1	PROSPECT	ST	579	Overhead	Distribution	Luminaire	LUM HPS RWY 250W	Active	250	90435-67003	S14	CITY OF PAWTUCKET
0052	001	1	PROSPECT	ST	579	Overhead	Distribution	Luminaire	LUM HPS RWY 250W	Active	250	90435-67003	S14	CITY OF PAWTUCKET
0053	000	1	PROSPECT	ST	579	Overhead	Distribution	Luminaire	LUM HPS RWY 100W	Active	100	90435-67003	S14	CITY OF PAWTUCKET
0054	001	1	PROSPECT	ST	579	Overhead	Distribution	Luminaire	LUM HPS RWY 100W	Active	100	90435-67003	S14	CITY OF PAWTUCKET
0055	000	1	PROSPECT	ST	579	Overhead	Distribution	Luminaire	LUM HPS RWY 100W	Active	100	90435-67003	S14	CITY OF PAWTUCKET
0056	000	1	PROSPECT	ST	579	Overhead	Distribution	Luminaire	LUM HPS RWY 250W	Active	250	90435-67003	S14	CITY OF PAWTUCKET
0057	000	1	PROSPECT	ST	579	Overhead	Distribution	Luminaire	LUM HPS RWY 250W	Active	250	90435-67003	S14	CITY OF PAWTUCKET
0058	000	1	PROSPECT	ST	579	Overhead	Distribution	Luminaire	LUM HPS RWY 250W	Active	250	90435-67003	S14	CITY OF PAWTUCKET
0061	000	1	PROSPECT	ST	579	Overhead	Distribution	Luminaire	LUM HPS RWY 250W	Active	250	90435-67003	S14	CITY OF PAWTUCKET
0063	000	1	PROSPECT	ST	579	Overhead	Distribution	Luminaire	LUM HPS RWY 100W	Active	100	90435-67003	S14	CITY OF PAWTUCKET
0064	000	1	PROSPECT	ST	579	Overhead	Distribution	Luminaire	LUM HPS RWY 100W	Active	100	90435-67003	S14	CITY OF PAWTUCKET
0065	000	1	PROSPECT	ST	579	Overhead	Distribution	Luminaire	LUM HPS RWY 100W	Active	100	90435-67003	S14	CITY OF PAWTUCKET
0066	000	1	PROSPECT	ST	579	Overhead	Distribution	Luminaire	LUM HPS RWY 100W	Active	100	90435-67003	S14	CITY OF PAWTUCKET
0067	000	1	PROSPECT	ST	579	Overhead	Distribution	Luminaire	LUM HPS RWY 100W	Active	100	90435-67003	S14	CITY OF PAWTUCKET
0068	000	1	PROSPECT	ST	579	Overhead	Distribution	Luminaire	LUM HPS RWY 100W	Active	100	90435-67003	S14	CITY OF PAWTUCKET
0069	000	1	PROSPECT	ST	579	Overhead	Distribution	Luminaire	LUM HPS RWY 100W	Active	100	90435-67003	S14	CITY OF PAWTUCKET
0070	000	1	PROSPECT	ST	579	Overhead	Distribution	Luminaire	LUM HPS RWY 100W	Active	100	90435-67003	S14	CITY OF PAWTUCKET
0071	000	1	PROSPECT	ST	579	Overhead	Distribution	Luminaire	LUM HPS RWY 70W	Active	70	90435-67003	S14	CITY OF PAWTUCKET
0002	000	1	PULLEN	AVE	580	Overhead	Distribution	Luminaire	LUM HPS RWY 70W	Active	70	90435-67003	S14	CITY OF PAWTUCKET
0003	000	1	PULLEN	AVE	580	Overhead	Distribution	Luminaire	LUM HPS RWY 70W	Active	70	90435-67003	S14	CITY OF PAWTUCKET
0004	000	1	PULLEN	AVE	580	Overhead	Distribution	Luminaire	LUM HPS RWY 70W	Active	70	90435-67003	S14	CITY OF PAWTUCKET
0006	000	1	PULLEN	AVE	580	Overhead	Distribution	Luminaire	LUM HPS RWY 70W	Active	70	90435-67003	S14	CITY OF PAWTUCKET
0007	000	1	PULLEN	AVE	580	Overhead	Distribution	Luminaire	LUM HPS FLD 250W	Active	250	65507-94008	S14	PAWTUCKET SCHOOL DEP
0008	000	1	PULLEN	AVE	580	Overhead	Distribution	Luminaire	LUM HPS RWY 70W	Active	70	90435-67003	S14	CITY OF PAWTUCKET
0011	000	1	PULLEN	AVE	580	Overhead	Distribution	Luminaire	LUM HPS RWY 70W	Active	70	90435-67003	S14	CITY OF PAWTUCKET
0011	000	2	PULLEN	AVE	580	Overhead	Distribution	Luminaire	LUM HPS FLD 250W	Active	250	53045-39003	S14	PAWTUCKET SCHOOL DEP
0012	000	1	PULLEN	AVE	580	Overhead	Distribution	Luminaire	LUM HPS FLD 250W	Active	250	53045-39003	S14	PAWTUCKET SCHOOL DEP
0013	000	1	PULLEN	AVE	580	Overhead	Distribution	Luminaire	LUM HPS RWY 70W	Active	70	90435-67003	S14	CITY OF PAWTUCKET
0015	000	1	PULLEN	AVE	580	Overhead	Distribution	Luminaire	LUM HPS RWY 70W	Active	70	90435-67003	S14	CITY OF PAWTUCKET
0017	000	1	PULLEN	AVE	580	Overhead	Distribution	Luminaire	LUM HPS RWY 70W	Active	70	90435-67003	S14	CITY OF PAWTUCKET
0020	000	1	PULLEN	AVE	580	Overhead	Distribution	Luminaire	LUM HPS RWY 100W	Active	100	90435-67003	S14	CITY OF PAWTUCKET
0021	000	1	PULLEN	AVE	580	Overhead	Distribution	Luminaire	LUM HPS RWY 70W	Active	70	90435-67003	S14	CITY OF PAWTUCKET
0023	000	1	PULLEN	AVE	580	Overhead	Distribution	Luminaire	LUM HPS RWY 70W	Active	70	90435-67003	S14	CITY OF PAWTUCKET
0026	000	1	PULLEN	AVE	580	Overhead	Distribution	Luminaire	LUM HPS RWY 100W	Active	100	90435-67003	S14	CITY OF PAWTUCKET
0028	000	1	PULLEN	AVE	580	Overhead	Distribution	Luminaire	LUM HPS RWY 70W	Active	70	90435-67003	S14	CITY OF PAWTUCKET
0030	000	1	PULLEN	AVE	580	Overhead	Distribution	Luminaire	LUM HPS RWY 70W	Active	70	90435-67003	S14	CITY OF PAWTUCKET
0032	000	1	PULLEN	AVE	580	Overhead	Distribution	Luminaire	LUM HPS RWY 70W	Active	70	90435-67003	S14	CITY OF PAWTUCKET
0002	000	1	QUINCY	AVE	581	Overhead	Distribution	Luminaire	LUM HPS RWY 100W	Active	100	90435-67003	S14	CITY OF PAWTUCKET
0004	000	1	QUINCY	AVE	581	Overhead	Distribution	Luminaire	LUM HPS RWY 100W	Active	100	90435-67003	S14	CITY OF PAWTUCKET
0006	000	1	QUINCY	AVE	581	Overhead	Distribution	Luminaire	LUM HPS RWY 70W	Active	70	90435-67003	S14	CITY OF PAWTUCKET
0009	000	1	QUINCY	AVE	581	Overhead	Distribution	Luminaire	LUM HPS RWY 100W	Active	100	90435-67003	S14	CITY OF PAWTUCKET
0003	000	1	RALEIGH	AVE	583	Overhead	Distribution	Luminaire	LUM HPS RWY 70W	Active	70	90435-67003	S14	CITY OF PAWTUCKET
0004	000	1	RALEIGH	AVE	583	Overhead	Distribution	Luminaire	LUM HPS RWY 70W	Active	70	90435-67003	S14	CITY OF PAWTUCKET
0006	000	1	RALEIGH	AVE	583	Overhead	Distribution	Luminaire	LUM HPS RWY 70W	Active	70	90435-67003	S14	CITY OF PAWTUCKET
0007	000	1	RALEIGH	AVE	583	Overhead	Distribution	Luminaire	LUM HPS RWY 70W	Active	70	90435-67003	S14	CITY OF PAWTUCKET
0009	000	1	RALEIGH	AVE	583	Overhead	Distribution	Luminaire	LUM HPS RWY 70W	Active	70	90435-67003	S14	CITY OF PAWTUCKET
0010	000	1	RALEIGH	AVE	583	Overhead	Distribution	Luminaire	LUM HPS RWY 70W	Active	70	90435-67003	S14	CITY OF PAWTUCKET
0012	000	1	RALEIGH	AVE	583	Overhead	Distribution	Luminaire	LUM HPS RWY 70W	Active	70	90435-67003	S14	CITY OF PAWTUCKET
0013	000	1	RALEIGH	AVE	583	Overhead	Distribution	Luminaire	LUM HPS RWY 70W	Active	70	90435-67003	S14	CITY OF PAWTUCKET
0017	000	1	RALEIGH	AVE	583	Overhead	Distribution	Luminaire	LUM HPS RWY 70W	Active	70	90435-67003	S14	CITY OF PAWTUCKET
0018	000	1	RALEIGH	AVE	583	Overhead	Distribution	Luminaire	LUM HPS RWY 70W	Active	70	90435-67003	S14	CITY OF PAWTUCKET
0002	000	1	RANDALL	ST	584	Overhead	Distribution	Luminaire	LUM HPS RWY 70W	Active	70	90435-67003	S14	CITY OF PAWTUCKET
0003	000	1	RANDALL	ST	584	Overhead	Distribution	Luminaire	LUM HPS RWY 70W	Active	70	90435-67003	S14	CITY OF PAWTUCKET
0004	000	1	RANDALL	ST	584	Overhead	Distribution	Luminaire	LUM HPS RWY 70W	Active	70	90435-67003	S14	CITY OF PAWTUCKET
0005	000	1	RANDALL	ST	584	Overhead	Distribution	Luminaire	LUM HPS RWY 70W	Active	70	90435-67003	S14	CITY OF PAWTUCKET
0006	000	1	RANDALL	ST	584	Overhead	Distribution	Luminaire	LUM HPS RWY 70W	Active	70	90435-67003	S14	CITY OF PAWTUCKET
0007	000	1	RANDALL	ST	584	Overhead	Distribution	Luminaire	LUM HPS RWY 70W	Active	70	90435-67003	S14	CITY OF PAWTUCKET
0008	000	1	RANDALL	ST	584	Overhead	Distribution	Luminaire	LUM HPS RWY 100W	Active	100	90435-67003	S14	CITY OF PAWTUCKET

0009	000	1	RANDALL	ST	584	Overhead	Distribution	Luminaire	LUM HPS RWY 70W	Active	70	90435-67003	S14	CITY OF PAWTUCKET
0011	000	1	RANDALL	ST	584	Overhead	Distribution	Luminaire	LUM HPS RWY 70W	Active	70	90435-67003	S14	CITY OF PAWTUCKET
0012	000	1	RANDALL	ST	584	Overhead	Distribution	Luminaire	LUM HPS RWY 70W	Active	70	90435-67003	S14	CITY OF PAWTUCKET
0013	000	1	RANDALL	ST	584	Overhead	Distribution	Luminaire	LUM HPS RWY 70W	Active	70	90435-67003	S14	CITY OF PAWTUCKET
0014	000	1	RANDALL	ST	584	Overhead	Distribution	Luminaire	LUM HPS RWY 70W	Active	70	90435-67003	S14	CITY OF PAWTUCKET
0015	001	1	RANDALL	ST	584	Overhead	Distribution	Luminaire	LUM HPS RWY 70W	Active	70	90435-67003	S14	CITY OF PAWTUCKET
0017	000	1	RANDALL	ST	584	Overhead	Distribution	Luminaire	LUM HPS RWY 70W	Active	70	90435-67003	S14	CITY OF PAWTUCKET
0018	000	1	RANDALL	ST	584	Overhead	Distribution	Luminaire	LUM HPS RWY 70W	Active	70	90435-67003	S14	CITY OF PAWTUCKET
0019	000	1	RANDALL	ST	584	Overhead	Distribution	Luminaire	LUM HPS RWY 70W	Active	70	90435-67003	S14	CITY OF PAWTUCKET
0021	000	1	RANDALL	ST	584	Overhead	Distribution	Luminaire	LUM HPS RWY 70W	Active	70	90435-67003	S14	CITY OF PAWTUCKET
0022	000	1	RANDALL	ST	584	Overhead	Distribution	Luminaire	LUM HPS RWY 70W	Active	70	90435-67003	S14	CITY OF PAWTUCKET
0023	000	1	RANDALL	ST	584	Overhead	Distribution	Luminaire	LUM HPS RWY 70W	Active	70	90435-67003	S14	CITY OF PAWTUCKET
0024	000	1	RANDALL	ST	584	Overhead	Distribution	Luminaire	LUM HPS RWY 70W	Active	70	90435-67003	S14	CITY OF PAWTUCKET
0024	000	3	RANDALL	ST	584	Overhead	Distribution	Luminaire	LUM HPS FLD 250W	Active	250	90435-67003	S14	CITY OF PAWTUCKET
0025	000	1	RANDALL	ST	584	Overhead	Distribution	Luminaire	LUM HPS FLD 400W	Active	400	15698-26009	S14	PAWTUCKET SCHOOL DEP
0025	000	2	RANDALL	ST	584	Overhead	Distribution	Luminaire	LUM HPS RWY 70W	Active	70	90435-67003	S14	CITY OF PAWTUCKET
0025	001	1	RANDALL	ST	584	Overhead	Distribution	Luminaire	LUM HPS RWY 70W	Active	70	90435-67003	S14	CITY OF PAWTUCKET
0026	000	1	RANDALL	ST	584	Overhead	Distribution	Luminaire	LUM HPS RWY 70W	Active	70	90435-67003	S14	CITY OF PAWTUCKET
0027	000	1	RANDALL	ST	584	Overhead	Distribution	Luminaire	LUM HPS RWY 70W	Active	70	90435-67003	S14	CITY OF PAWTUCKET
0028	000	1	RANDALL	ST	584	Overhead	Distribution	Luminaire	LUM HPS RWY 70W	Active	70	90435-67003	S14	CITY OF PAWTUCKET
0029	000	1	RANDALL	ST	584	Overhead	Distribution	Luminaire	LUM HPS RWY 70W	Active	70	90435-67003	S14	CITY OF PAWTUCKET
0002	000	1	RAYMOND	AVE	585	Overhead	Distribution	Luminaire	LUM HPS RWY 70W	Active	70	90435-67003	S14	CITY OF PAWTUCKET
0004	000	1	RAYMOND	AVE	585	Overhead	Distribution	Luminaire	LUM HPS RWY 70W	Active	70	90435-67003	S14	CITY OF PAWTUCKET
0006	000	1	RAYMOND	AVE	585	Overhead	Distribution	Luminaire	LUM HPS RWY 70W	Active	70	90435-67003	S14	CITY OF PAWTUCKET
0008	000	1	RAYMOND	AVE	585	Overhead	Distribution	Luminaire	LUM HPS RWY 70W	Active	70	90435-67003	S14	CITY OF PAWTUCKET
0002	000	1	REDWOOD	AVE	586	Overhead	Distribution	Luminaire	LUM HPS RWY 70W	Active	70	90435-67003	S14	CITY OF PAWTUCKET
0003	000	1	REDWOOD	AVE	586	Overhead	Distribution	Luminaire	LUM HPS RWY 100W	Active	100	90435-67003	S14	CITY OF PAWTUCKET
0005	000	1	REDWOOD	AVE	586	Overhead	Distribution	Luminaire	LUM HPS RWY 70W	Active	70	90435-67003	S14	CITY OF PAWTUCKET
0007	000	1	REDWOOD	AVE	586	Overhead	Distribution	Luminaire	LUM HPS RWY 70W	Active	70	90435-67003	S14	CITY OF PAWTUCKET
0002	000	1	RESERVOIR	AVE	587	Overhead	Distribution	Luminaire	LUM HPS RWY 70W	Active	70	90435-67003	S14	CITY OF PAWTUCKET
0005	000	1	RESERVOIR	AVE	587	Overhead	Distribution	Luminaire	LUM HPS RWY 100W	Active	100	90435-67003	S14	CITY OF PAWTUCKET
0007	000	1	RESERVOIR	AVE	587	Overhead	Distribution	Luminaire	LUM HPS RWY 100W	Active	100	90435-67003	S14	CITY OF PAWTUCKET
0008	000	1	RESERVOIR	AVE	587	Overhead	Distribution	Luminaire	LUM HPS RWY 100W	Active	100	90435-67003	S14	CITY OF PAWTUCKET
0010	000	1	RESERVOIR	AVE	587	Overhead	Distribution	Luminaire	LUM HPS RWY 100W	Active	100	90435-67003	S14	CITY OF PAWTUCKET
0011	000	1	RESERVOIR	AVE	587	Overhead	Distribution	Luminaire	LUM HPS RWY 100W	Active	100	90435-67003	S14	CITY OF PAWTUCKET
0013	000	1	RESERVOIR	AVE	587	Overhead	Distribution	Luminaire	LUM HPS RWY 100W	Active	100	90435-67003	S14	CITY OF PAWTUCKET
0015	000	1	RESERVOIR	AVE	587	Overhead	Distribution	Luminaire	LUM HPS RWY 100W	Active	100	90435-67003	S14	CITY OF PAWTUCKET
0010	000	1	REVERE	ST	588	Overhead	Distribution	Luminaire	LUM HPS RWY 70W	Active	70	90435-67003	S14	CITY OF PAWTUCKET
0011	000	1	REVERE	ST	588	Overhead	Distribution	Luminaire	LUM HPS RWY 100W	Active	100	90435-67003	S14	CITY OF PAWTUCKET
0012	000	1	REVERE	ST	588	Overhead	Distribution	Luminaire	LUM HPS RWY 100W	Active	100	90435-67003	S14	CITY OF PAWTUCKET
0014	000	1	REVERE	ST	588	Overhead	Distribution	Luminaire	LUM HPS RWY 100W	Active	100	90435-67003	S14	CITY OF PAWTUCKET
0016	000	1	REVERE	ST	588	Overhead	Distribution	Luminaire	LUM HPS RWY 100W	Active	100	90435-67003	S14	CITY OF PAWTUCKET
0021	000	1	REVERE	ST	588	Overhead	Distribution	Luminaire	LUM HPS RWY 100W	Active	100	90435-67003	S14	CITY OF PAWTUCKET
0024	000	1	REVERE	ST	588	Overhead	Distribution	Luminaire	LUM HPS RWY 100W	Active	100	90435-67003	S14	CITY OF PAWTUCKET
0001	000	1	RHODE ISLAND	AVE	589	Overhead	Distribution	Luminaire	LUM HPS RWY 250W	Active	250	90435-67003	S14	CITY OF PAWTUCKET
0003	000	1	RHODE ISLAND	AVE	589	Overhead	Distribution	Luminaire	LUM HPS RWY 70W	Active	70	90435-67003	S14	CITY OF PAWTUCKET
0005	000	1	RHODE ISLAND	AVE	589	Overhead	Distribution	Luminaire	LUM HPS RWY 70W	Active	70	90435-67003	S14	CITY OF PAWTUCKET
0007	000	1	RHODE ISLAND	AVE	589	Overhead	Distribution	Luminaire	LUM HPS RWY 70W	Active	70	90435-67003	S14	CITY OF PAWTUCKET
0009	000	1	RHODE ISLAND	AVE	589	Overhead	Distribution	Luminaire	LUM HPS RWY 70W	Active	70	90435-67003	S14	CITY OF PAWTUCKET
0011	000	1	RHODE ISLAND	AVE	589	Overhead	Distribution	Luminaire	LUM HPS RWY 70W	Active	70	90435-67003	S14	CITY OF PAWTUCKET
0013	000	1	RHODE ISLAND	AVE	589	Overhead	Distribution	Luminaire	LUM HPS RWY 70W	Active	70	90435-67003	S14	CITY OF PAWTUCKET
0015	000	1	RHODE ISLAND	AVE	589	Overhead	Distribution	Luminaire	LUM HPS RWY 70W	Active	70	90435-67003	S14	CITY OF PAWTUCKET
0017	000	1	RHODE ISLAND	AVE	589	Overhead	Distribution	Luminaire	LUM HPS RWY 70W	Active	70	90435-67003	S14	CITY OF PAWTUCKET
0020	000	1	RHODE ISLAND	AVE	589	Overhead	Distribution	Luminaire	LUM HPS RWY 70W	Active	70	90435-67003	S14	CITY OF PAWTUCKET
0024	000	1	RHODE ISLAND	AVE	589	Overhead	Distribution	Luminaire	LUM HPS RWY 70W	Active	70	90435-67003	S14	CITY OF PAWTUCKET
0026	000	1	RHODE ISLAND	AVE	589	Overhead	Distribution	Luminaire	LUM HPS RWY 70W	Active	70	90435-67003	S14	CITY OF PAWTUCKET
0028	000	1	RHODE ISLAND	AVE	589	Overhead	Distribution	Luminaire	LUM HPS RWY 70W	Active	70	90435-67003	S14	CITY OF PAWTUCKET
0030	000	1	RHODE ISLAND	AVE	589	Overhead	Distribution	Luminaire	LUM HPS RWY 70W	Active	70	90435-67003	S14	CITY OF PAWTUCKET
0003	000	1	RHODES	ST	590	Overhead	Distribution	Luminaire	LUM HPS RWY 100W	Active	100	90435-67003	S14	CITY OF PAWTUCKET
0004	000	1	RHODES	ST	590	Overhead	Distribution	Luminaire	LUM HPS RWY 70W	Active	70	90435-67003	S14	CITY OF PAWTUCKET
0005	000	1	RHODES	ST	590	Overhead	Distribution	Luminaire	LUM HPS RWY 70W	Active	70	90435-67003	S14	CITY OF PAWTUCKET
0006	000	1	RHODES	ST	590	Overhead	Distribution	Luminaire	LUM HPS RWY 70W	Active	70	90435-67003	S14	CITY OF PAWTUCKET
0008	000	1	RHODES	ST	590	Overhead	Distribution	Luminaire	LUM HPS RWY 70W	Active	70	90435-67003	S14	CITY OF PAWTUCKET

0001	000	1	RICE	ST	591	Overhead	Distribution	Luminaire	LUM HPS RWY 100W	Active	100	90435-67003	S14	CITY OF PAWTUCKET
0003	000	1	RICE	ST	591	Overhead	Distribution	Luminaire	LUM HPS RWY 70W	Active	70	90435-67003	S14	CITY OF PAWTUCKET
0005	000	1	RICE	ST	591	Overhead	Distribution	Luminaire	LUM HPS RWY 70W	Active	70	90435-67003	S14	CITY OF PAWTUCKET
0006	001	1	RICE	ST	591	Overhead	Distribution	Luminaire	LUM HPS RWY 70W	Active	70	90435-67003	S14	CITY OF PAWTUCKET
0008	000	1	RICE	ST	591	Overhead	Distribution	Luminaire	LUM HPS RWY 70W	Active	70	90435-67003	S14	CITY OF PAWTUCKET
0009	001	1	RICE	ST	591	Overhead	Distribution	Luminaire	LUM HPS RWY 70W	Active	70	90435-67003	S14	CITY OF PAWTUCKET
0011	000	1	RICE	ST	591	Overhead	Distribution	Luminaire	LUM HPS RWY 70W	Active	70	90435-67003	S14	CITY OF PAWTUCKET
0013	000	1	RICE	ST	591	Overhead	Distribution	Luminaire	LUM HPS RWY 70W	Active	70	90435-67003	S14	CITY OF PAWTUCKET
0015	000	1	RICE	ST	591	Overhead	Distribution	Luminaire	LUM HPS RWY 70W	Active	70	90435-67003	S14	CITY OF PAWTUCKET
0017	000	1	RICE	ST	591	Overhead	Distribution	Luminaire	LUM HPS RWY 70W	Active	70	90435-67003	S14	CITY OF PAWTUCKET
0019	000	1	RICE	ST	591	Overhead	Distribution	Luminaire	LUM HPS RWY 70W	Active	70	90435-67003	S14	CITY OF PAWTUCKET
0022	000	1	RICE	ST	591	Overhead	Distribution	Luminaire	LUM HPS RWY 70W	Active	70	90435-67003	S14	CITY OF PAWTUCKET
0002	000	1	RIDGE	ST	592	Overhead	Distribution	Luminaire	LUM HPS RWY 70W	Active	70	90435-67003	S14	CITY OF PAWTUCKET
0004	000	1	RIDGE	ST	592	Overhead	Distribution	Luminaire	LUM HPS RWY 70W	Active	70	90435-67003	S14	CITY OF PAWTUCKET
0006	000	1	RIDGE	ST	592	Overhead	Distribution	Luminaire	LUM HPS RWY 70W	Active	70	90435-67003	S14	CITY OF PAWTUCKET
0008	000	1	RIDGE	ST	592	Overhead	Distribution	Luminaire	LUM HPS RWY 70W	Active	70	90435-67003	S14	CITY OF PAWTUCKET
0010	000	1	RIDGE	ST	592	Overhead	Distribution	Luminaire	LUM HPS RWY 70W	Active	70	90435-67003	S14	CITY OF PAWTUCKET
0011	000	1	RIDGE	ST	592	Overhead	Distribution	Luminaire	LUM HPS RWY 70W	Active	70	90435-67003	S14	CITY OF PAWTUCKET
0012	000	1	RIDGE	ST	592	Overhead	Distribution	Luminaire	LUM HPS RWY 70W	Active	70	90435-67003	S14	CITY OF PAWTUCKET
0001	000	1	RIDGEWOOD	RD	593	Overhead	Distribution	Luminaire	LUM HPS RWY 70W	Active	70	90435-67003	S14	CITY OF PAWTUCKET
0002	000	1	RIDGEWOOD	RD	593	Overhead	Distribution	Luminaire	LUM HPS RWY 70W	Active	70	90435-67003	S14	CITY OF PAWTUCKET
0003	000	1	RIDGEWOOD	RD	593	Overhead	Distribution	Luminaire	LUM HPS RWY 70W	Active	70	90435-67003	S14	CITY OF PAWTUCKET
0011	000	1	RIDGEWOOD	RD	593	Overhead	Distribution	Luminaire	LUM HPS FLD 250W	Active	250	77966-82004	S14	PAWTUCKET SCHOOL
0013	000	1	RIDGEWOOD	RD	593	Overhead	Distribution	Luminaire	LUM HPS FLD 400W	Active	400	77966-82004	S14	PAWTUCKET SCHOOL
0002	000	1	RILEY	ST	594	Overhead	Distribution	Luminaire	LUM HPS RWY 70W	Active	70	90435-67003	S14	CITY OF PAWTUCKET
0004	000	1	RILEY	ST	594	Overhead	Distribution	Luminaire	LUM HPS RWY 70W	Active	70	90435-67003	S14	CITY OF PAWTUCKET
0006	000	1	RILEY	ST	594	Overhead	Distribution	Luminaire	LUM HPS RWY 70W	Active	70	90435-67003	S14	CITY OF PAWTUCKET
0008	000	1	RILEY	ST	594	Overhead	Distribution	Luminaire	LUM HPS RWY 70W	Active	70	90435-67003	S14	CITY OF PAWTUCKET
0010	000	1	RILEY	ST	594	Overhead	Distribution	Luminaire	LUM HPS RWY 70W	Active	70	90435-67003	S14	CITY OF PAWTUCKET
0012	000	1	RIVER	ST	595	Overhead	Distribution	Luminaire	LUM HPS RWY 100W	Active	100	90435-67003	S14	CITY OF PAWTUCKET
0015	000	1	RIVER	ST	595	Overhead	Distribution	Luminaire	LUM HPS RWY 100W	Active	100	90435-67003	S14	CITY OF PAWTUCKET
0001	000	1	RIVERVIEW	AVE	596	Overhead	Distribution	Luminaire	LUM HPS RWY 70W	Active	70	90435-67003	S14	CITY OF PAWTUCKET
0003	000	1	RIVERVIEW	AVE	596	Overhead	Distribution	Luminaire	LUM HPS RWY 70W	Active	70	90435-67003	S14	CITY OF PAWTUCKET
0005	000	1	RIVERVIEW	AVE	596	Overhead	Distribution	Luminaire	LUM HPS RWY 70W	Active	70	90435-67003	S14	CITY OF PAWTUCKET
0007	000	1	RIVERVIEW	AVE	596	Overhead	Distribution	Luminaire	LUM HPS RWY 70W	Active	70	90435-67003	S14	CITY OF PAWTUCKET
0009	000	1	RIVERVIEW	AVE	596	Overhead	Distribution	Luminaire	LUM HPS RWY 70W	Active	70	90435-67003	S14	CITY OF PAWTUCKET
0002	000	1	ROADWAY "B"	ST	782	Overhead	Distribution	Luminaire	LUM HPS RWY 70W	Active	70	90435-67003	S14	CITY OF PAWTUCKET
0004	000	1	ROADWAY "B"	ST	782	Overhead	Distribution	Luminaire	LUM HPS RWY 100W	Active	100	90435-67003	S14	CITY OF PAWTUCKET
0003	000	1	ROBERT	ST	597	Overhead	Distribution	Luminaire	LUM HPS RWY 70W	Active	70	90435-67003	S14	CITY OF PAWTUCKET
0005	000	1	ROBERT	ST	597	Overhead	Distribution	Luminaire	LUM HPS RWY 70W	Active	70	90435-67003	S14	CITY OF PAWTUCKET
0003	000	1	ROBERTA	AVE	598	Overhead	Distribution	Luminaire	LUM HPS RWY 70W	Active	70	90435-67003	S14	CITY OF PAWTUCKET
0004	000	1	ROBERTA	AVE	598	Overhead	Distribution	Luminaire	LUM HPS RWY 70W	Active	70	90435-67003	S14	CITY OF PAWTUCKET
0001	000	1	ROBINSON	AVE	599	Overhead	Distribution	Luminaire	LUM HPS RWY 100W	Active	100	90435-67003	S14	CITY OF PAWTUCKET
0002	001	1	ROBINSON	AVE	599	Overhead	Distribution	Luminaire	LUM HPS RWY 100W	Active	100	90435-67003	S14	CITY OF PAWTUCKET
0004	000	1	ROBINSON	AVE	599	Overhead	Distribution	Luminaire	LUM HPS RWY 100W	Active	100	90435-67003	S14	CITY OF PAWTUCKET
0005	000	1	ROBINSON	AVE	599	Overhead	Distribution	Luminaire	LUM HPS RWY 250W	Active	250	90435-67003	S14	CITY OF PAWTUCKET
0007	000	1	ROBINSON	AVE	599	Overhead	Distribution	Luminaire	LUM HPS RWY 100W	Active	100	90435-67003	S14	CITY OF PAWTUCKET
0008	000	1	ROBINSON	AVE	599	Overhead	Distribution	Luminaire	LUM HPS RWY 100W	Active	100	90435-67003	S14	CITY OF PAWTUCKET
0009	000	1	ROBINSON	AVE	599	Overhead	Distribution	Luminaire	LUM HPS RWY 100W	Active	100	90435-67003	S14	CITY OF PAWTUCKET
0010	000	1	ROBINSON	AVE	599	Overhead	Distribution	Luminaire	LUM HPS RWY 100W	Active	100	90435-67003	S14	CITY OF PAWTUCKET
0011	000	1	ROBINSON	AVE	599	Overhead	Distribution	Luminaire	LUM HPS RWY 100W	Active	100	90435-67003	S14	CITY OF PAWTUCKET
0012	000	1	ROBINSON	AVE	599	Overhead	Distribution	Luminaire	LUM HPS RWY 100W	Active	100	90435-67003	S14	CITY OF PAWTUCKET
0013	000	1	ROBINSON	AVE	599	Overhead	Distribution	Luminaire	LUM HPS RWY 100W	Active	100	90435-67003	S14	CITY OF PAWTUCKET
0014	000	1	ROBINSON	AVE	599	Overhead	Distribution	Luminaire	LUM HPS RWY 100W	Active	100	90435-67003	S14	CITY OF PAWTUCKET
0015	000	1	ROBINSON	AVE	599	Overhead	Distribution	Luminaire	LUM HPS RWY 100W	Active	100	90435-67003	S14	CITY OF PAWTUCKET
0016	000	1	ROBINSON	AVE	599	Overhead	Distribution	Luminaire	LUM HPS RWY 100W	Active	100	90435-67003	S14	CITY OF PAWTUCKET
0017	000	1	ROBINSON	AVE	599	Overhead	Distribution	Luminaire	LUM HPS RWY 100W	Active	100	90435-67003	S14	CITY OF PAWTUCKET
0018	000	1	ROBINSON	AVE	599	Overhead	Distribution	Luminaire	LUM HPS RWY 100W	Active	100	90435-67003	S14	CITY OF PAWTUCKET
0019	000	1	ROBINSON	AVE	599	Overhead	Distribution	Luminaire	LUM HPS RWY 100W	Active	100	90435-67003	S14	CITY OF PAWTUCKET
0020	000	1	ROBINSON	AVE	599	Overhead	Distribution	Luminaire	LUM HPS RWY 100W	Active	100	90435-67003	S14	CITY OF PAWTUCKET
0021	000	1	ROBINSON	AVE	599	Overhead	Distribution	Luminaire	LUM HPS RWY 100W	Active	100	90435-67003	S14	CITY OF PAWTUCKET
0022	000	1	ROBINSON	AVE	599	Overhead	Distribution	Luminaire	LUM HPS RWY 100W	Active	100	90435-67003	S14	CITY OF PAWTUCKET
0023	000	1	ROBINSON	AVE	599	Overhead	Distribution	Luminaire	LUM HPS RWY 100W	Active	100	90435-67003	S14	CITY OF PAWTUCKET

0024	000	1	ROBINSON	AVE	599	Overhead	Distribution	Luminaire	LUM HPS RWY 250W	Active	250	90435-67003	S14	CITY OF PAWTUCKET
0002	000	1	ROBLEN	DR	600	Overhead	Distribution	Luminaire	LUM HPS RWY 70W	Active	70	90435-67003	S14	CITY OF PAWTUCKET
0001	000	1	ROCCO	AVE	601	Overhead	Distribution	Luminaire	LUM HPS RWY 70W	Active	70	90435-67003	S14	CITY OF PAWTUCKET
0003	000	1	ROCCO	AVE	601	Overhead	Distribution	Luminaire	LUM HPS RWY 70W	Active	70	90435-67003	S14	CITY OF PAWTUCKET
0005	000	1	ROCCO	AVE	601	Overhead	Distribution	Luminaire	LUM HPS RWY 70W	Active	70	90435-67003	S14	CITY OF PAWTUCKET
0008	000	1	ROCCO	AVE	601	Overhead	Distribution	Luminaire	LUM HPS RWY 70W	Active	70	90435-67003	S14	CITY OF PAWTUCKET
0010	000	1	ROCCO	AVE	601	Overhead	Distribution	Luminaire	LUM HPS RWY 70W	Active	70	90435-67003	S14	CITY OF PAWTUCKET
0012	000	1	ROCCO	AVE	601	Overhead	Distribution	Luminaire	LUM HPS RWY 70W	Active	70	90435-67003	S14	CITY OF PAWTUCKET
0013	000	1	ROCCO	AVE	601	Overhead	Distribution	Luminaire	LUM HPS RWY 70W	Active	70	90435-67003	S14	CITY OF PAWTUCKET
0001	000	1	ROCK	AVE	602	Overhead	Distribution	Luminaire	LUM HPS RWY 70W	Active	70	90435-67003	S14	CITY OF PAWTUCKET
0003	000	1	ROCK	AVE	602	Overhead	Distribution	Luminaire	LUM HPS RWY 70W	Active	70	90435-67003	S14	CITY OF PAWTUCKET
0005	000	1	ROCK	AVE	602	Overhead	Distribution	Luminaire	LUM HPS RWY 70W	Active	70	90435-67003	S14	CITY OF PAWTUCKET
0006	000	1	ROCK	AVE	602	Overhead	Distribution	Luminaire	LUM HPS RWY 70W	Active	70	90435-67003	S14	CITY OF PAWTUCKET
0008	000	1	ROCK	AVE	602	Overhead	Distribution	Luminaire	LUM HPS RWY 70W	Active	70	90435-67003	S14	CITY OF PAWTUCKET
0010	000	1	ROCK	AVE	602	Overhead	Distribution	Luminaire	LUM HPS RWY 70W	Active	70	90435-67003	S14	CITY OF PAWTUCKET
0011	000	1	ROCK	AVE	602	Overhead	Distribution	Luminaire	LUM HPS RWY 70W	Active	70	90435-67003	S14	CITY OF PAWTUCKET
0012	000	1	ROCK	AVE	602	Overhead	Distribution	Luminaire	LUM HPS RWY 70W	Active	70	90435-67003	S14	CITY OF PAWTUCKET
0013	000	1	ROCK	AVE	602	Overhead	Distribution	Luminaire	LUM HPS RWY 70W	Active	70	90435-67003	S14	CITY OF PAWTUCKET
0014	000	1	ROCK	AVE	602	Overhead	Distribution	Luminaire	LUM HPS RWY 70W	Active	70	90435-67003	S14	CITY OF PAWTUCKET
0002	000	1	ROME	ST	603	Overhead	Distribution	Luminaire	LUM HPS RWY 70W	Active	70	90435-67003	S14	CITY OF PAWTUCKET
0004	000	0	ROOSEVELT	AVE	604	Underground	Streetlighting	Pole	POLE METAL =>25FT	Active	0	90435-67003	S14	CITY OF PAWTUCKET
0004	000	1	ROOSEVELT	AVE	604	Underground	Streetlighting	Luminaire	LUM HPS RWY 100W	Active	100	90435-67003	S14	CITY OF PAWTUCKET
0005	001	0	ROOSEVELT	AVE	604	Underground	Streetlighting	Pole	POLE METAL =>25FT	Active	0	90435-67003	S14	CITY OF PAWTUCKET
0005	001	1	ROOSEVELT	AVE	604	Underground	Streetlighting	Luminaire	LUM HPS RWY 100W	Active	100	90435-67003	S14	CITY OF PAWTUCKET
0008	000	0	ROOSEVELT	AVE	604	Underground	Streetlighting	Pole	POLE METAL =>25FT	Active	0	90435-67003	S14	CITY OF PAWTUCKET
0008	000	1	ROOSEVELT	AVE	604	Underground	Streetlighting	Luminaire	LUM HPS RWY 100W	Active	100	90435-67003	S14	CITY OF PAWTUCKET
0009	000	0	ROOSEVELT	AVE	604	Underground	Streetlighting	Pole	POLE METAL =>25FT	Active	0	90435-67003	S14	CITY OF PAWTUCKET
0009	000	1	ROOSEVELT	AVE	604	Underground	Streetlighting	Luminaire	LUM HPS RWY 100W	Active	100	90435-67003	S14	CITY OF PAWTUCKET
0012	000	0	ROOSEVELT	AVE	604	Underground	Streetlighting	Pole	POLE METAL =>25FT	Active	0	90435-67003	S14	CITY OF PAWTUCKET
0012	000	1	ROOSEVELT	AVE	604	Underground	Streetlighting	Luminaire	LUM HPS RWY 100W	Active	100	90435-67003	S14	CITY OF PAWTUCKET
0013	000	0	ROOSEVELT	AVE	604	Underground	Streetlighting	Pole	POLE METAL =>25FT	Active	0	90435-67003	S14	CITY OF PAWTUCKET
0013	000	1	ROOSEVELT	AVE	604	Underground	Streetlighting	Luminaire	LUM HPS RWY 100W	Active	100	90435-67003	S14	CITY OF PAWTUCKET
0035	000	1	ROOSEVELT	AVE	604	Overhead	Distribution	Luminaire	LUM HPS RWY 100W	Active	100	90435-67003	S14	CITY OF PAWTUCKET
0036	000	1	ROOSEVELT	AVE	604	Overhead	Distribution	Luminaire	LUM HPS RWY 100W	Active	100	90435-67003	S14	CITY OF PAWTUCKET
0036	000	2	ROOSEVELT	AVE	604	Overhead	Distribution	Luminaire	LUM HPS FLD 400W	Active	400	90435-67003	S14	CITY OF PAWTUCKET
0038	000	1	ROOSEVELT	AVE	604	Overhead	Distribution	Luminaire	LUM HPS RWY 100W	Active	100	90435-67003	S14	CITY OF PAWTUCKET
0040	000	1	ROOSEVELT	AVE	604	Overhead	Distribution	Luminaire	LUM HPS RWY 100W	Active	100	90435-67003	S14	CITY OF PAWTUCKET
0041	000	1	ROOSEVELT	AVE	604	Overhead	Distribution	Luminaire	LUM HPS RWY 100W	Active	100	90435-67003	S14	CITY OF PAWTUCKET
0043	000	1	ROOSEVELT	AVE	604	Overhead	Distribution	Luminaire	LUM HPS RWY 100W	Active	100	90435-67003	S14	CITY OF PAWTUCKET
0044	000	1	ROOSEVELT	AVE	604	Overhead	Distribution	Luminaire	LUM HPS RWY 100W	Active	100	90435-67003	S14	CITY OF PAWTUCKET
0045	000	1	ROOSEVELT	AVE	604	Overhead	Distribution	Luminaire	LUM HPS RWY 100W	Active	100	90435-67003	S14	CITY OF PAWTUCKET
0046	000	1	ROOSEVELT	AVE	604	Overhead	Distribution	Luminaire	LUM HPS RWY 100W	Active	100	90435-67003	S14	CITY OF PAWTUCKET
0047	000	1	ROOSEVELT	AVE	604	Overhead	Distribution	Luminaire	LUM HPS RWY 100W	Active	100	90435-67003	S14	CITY OF PAWTUCKET
0049	000	1	ROOSEVELT	AVE	604	Overhead	Distribution	Luminaire	LUM HPS RWY 100W	Active	100	90435-67003	S14	CITY OF PAWTUCKET
0051	000	1	ROOSEVELT	AVE	604	Overhead	Distribution	Luminaire	LUM HPS RWY 100W	Active	100	90435-67003	S14	CITY OF PAWTUCKET
0053	000	1	ROOSEVELT	AVE	604	Overhead	Distribution	Luminaire	LUM HPS RWY 100W	Active	100	90435-67003	S14	CITY OF PAWTUCKET
0055	000	1	ROOSEVELT	AVE	604	Overhead	Distribution	Luminaire	LUM HPS RWY 100W	Active	100	90435-67003	S14	CITY OF PAWTUCKET
0057	000	1	ROOSEVELT	AVE	604	Overhead	Distribution	Luminaire	LUM HPS RWY 100W	Active	100	90435-67003	S14	CITY OF PAWTUCKET
0100	000	1	ROOSEVELT	AVE	604	Overhead	Distribution	Luminaire	LUM HPS RWY 100W	Active	100	90435-67003	S14	CITY OF PAWTUCKET
0101	000	1	ROOSEVELT	AVE	604	Overhead	Distribution	Luminaire	LUM HPS RWY 70W	Active	70	90435-67003	S14	CITY OF PAWTUCKET
0102	000	1	ROOSEVELT	AVE	604	Overhead	Distribution	Luminaire	LUM HPS RWY 100W	Active	100	90435-67003	S14	CITY OF PAWTUCKET
0104	000	1	ROOSEVELT	AVE	604	Overhead	Distribution	Luminaire	LUM HPS RWY 70W	Active	70	90435-67003	S14	CITY OF PAWTUCKET
0106	000	1	ROOSEVELT	AVE	604	Overhead	Distribution	Luminaire	LUM HPS RWY 70W	Active	70	90435-67003	S14	CITY OF PAWTUCKET
0108	000	1	ROOSEVELT	AVE	604	Overhead	Distribution	Luminaire	LUM HPS RWY 100W	Active	100	90435-67003	S14	CITY OF PAWTUCKET
0110	000	1	ROOSEVELT	AVE	604	Overhead	Distribution	Luminaire	LUM HPS RWY 250W	Active	250	90435-67003	S14	CITY OF PAWTUCKET
0112	000	1	ROOSEVELT	AVE	604	Overhead	Distribution	Luminaire	LUM HPS RWY 100W	Active	100	90435-67003	S14	CITY OF PAWTUCKET
0116	000	1	ROOSEVELT	AVE	604	Overhead	Distribution	Luminaire	LUM HPS RWY 100W	Active	100	90435-67003	S14	CITY OF PAWTUCKET
0120	000	1	ROOSEVELT	AVE	604	Overhead	Distribution	Luminaire	LUM HPS RWY 100W	Active	100	90435-67003	S14	CITY OF PAWTUCKET
0122	000	1	ROOSEVELT	AVE	604	Overhead	Distribution	Luminaire	LUM HPS RWY 100W	Active	100	90435-67003	S14	CITY OF PAWTUCKET
0145	000	1	ROOSEVELT	AVE	604	Overhead	Distribution	Luminaire	LUM HPS RWY 250W	Active	250	90435-67003	S14	CITY OF PAWTUCKET
0147	000	1	ROOSEVELT	AVE	604	Overhead	Distribution	Luminaire	LUM HPS RWY 250W	Active	250	90435-67003	S14	CITY OF PAWTUCKET
0149	000	1	ROOSEVELT	AVE	604	Overhead	Distribution	Luminaire	LUM HPS RWY 100W	Active	100	90435-67003	S14	CITY OF PAWTUCKET
0151	000	1	ROOSEVELT	AVE	604	Overhead	Distribution	Luminaire	LUM HPS RWY 100W	Active	100	90435-67003	S14	CITY OF PAWTUCKET

0153	000	1	ROOSEVELT	AVE	604	Overhead	Distribution	Luminaire	LUM HPS RWY 100W	Active	100	90435-67003	S14	CITY OF PAWTUCKET
0155	000	1	ROOSEVELT	AVE	604	Overhead	Distribution	Luminaire	LUM HPS RWY 100W	Active	100	90435-67003	S14	CITY OF PAWTUCKET
0160	000	1	ROOSEVELT	AVE	604	Overhead	Distribution	Luminaire	LUM HPS RWY 250W	Active	250	90435-67003	S14	CITY OF PAWTUCKET
0163	000	1	ROOSEVELT	AVE	604	Overhead	Distribution	Luminaire	LUM HPS RWY 100W	Active	100	90435-67003	S14	CITY OF PAWTUCKET
0167	000	1	ROOSEVELT	AVE	604	Overhead	Distribution	Luminaire	LUM HPS RWY 100W	Active	100	90435-67003	S14	CITY OF PAWTUCKET
0169	000	1	ROOSEVELT	AVE	604	Overhead	Distribution	Luminaire	LUM HPS RWY 100W	Active	100	90435-67003	S14	CITY OF PAWTUCKET
0171	000	1	ROOSEVELT	AVE	604	Overhead	Distribution	Luminaire	LUM HPS RWY 100W	Active	100	90435-67003	S14	CITY OF PAWTUCKET
0173	000	1	ROOSEVELT	AVE	604	Overhead	Distribution	Luminaire	LUM HPS RWY 100W	Active	100	90435-67003	S14	CITY OF PAWTUCKET
0177	000	1	ROOSEVELT	AVE	604	Overhead	Distribution	Luminaire	LUM HPS RWY 100W	Active	100	90435-67003	S14	CITY OF PAWTUCKET
0179	000	1	ROOSEVELT	AVE	604	Overhead	Distribution	Luminaire	LUM HPS RWY 100W	Active	100	90435-67003	S14	CITY OF PAWTUCKET
0183	000	1	ROOSEVELT	AVE	604	Overhead	Distribution	Luminaire	LUM HPS RWY 100W	Active	100	90435-67003	S14	CITY OF PAWTUCKET
0185	000	1	ROOSEVELT	AVE	604	Overhead	Distribution	Luminaire	LUM HPS RWY 100W	Active	100	90435-67003	S14	CITY OF PAWTUCKET
0189	000	1	ROOSEVELT	AVE	604	Overhead	Distribution	Luminaire	LUM HPS RWY 100W	Active	100	90435-67003	S14	CITY OF PAWTUCKET
0193	000	1	ROOSEVELT	AVE	604	Overhead	Distribution	Luminaire	LUM HPS RWY 100W	Active	100	90435-67003	S14	CITY OF PAWTUCKET
0197	000	1	ROOSEVELT	AVE	604	Overhead	Distribution	Luminaire	LUM HPS RWY 100W	Active	100	90435-67003	S14	CITY OF PAWTUCKET
0199	000	1	ROOSEVELT	AVE	604	Overhead	Distribution	Luminaire	LUM HPS RWY 100W	Active	100	90435-67003	S14	CITY OF PAWTUCKET
0201	000	1	ROOSEVELT	AVE	604	Overhead	Distribution	Luminaire	LUM HPS RWY 100W	Active	100	90435-67003	S14	CITY OF PAWTUCKET
0205	000	1	ROOSEVELT	AVE	604	Overhead	Distribution	Luminaire	LUM HPS RWY 100W	Active	100	90435-67003	S14	CITY OF PAWTUCKET
0209	000	1	ROOSEVELT	AVE	604	Overhead	Distribution	Luminaire	LUM HPS RWY 100W	Active	100	90435-67003	S14	CITY OF PAWTUCKET
0213	000	1	ROOSEVELT	AVE	604	Overhead	Distribution	Luminaire	LUM HPS RWY 100W	Active	100	90435-67003	S14	CITY OF PAWTUCKET
0001	000	0	ROSE	DR	605	Underground	Streetlighting	Pole	POLE FIBER PT <25FT	Active	0	90435-67003	S14	CITY OF PAWTUCKET
0001	000	1	ROSE	DR	605	Underground	Streetlighting	Luminaire	LUM HPS POST 100W	Active	100	90435-67003	S14	CITY OF PAWTUCKET
0002	000	0	ROSE	DR	605	Underground	Streetlighting	Pole	POLE FIBER PT <25FT	Active	0	90435-67003	S14	CITY OF PAWTUCKET
0002	000	1	ROSE	DR	605	Underground	Streetlighting	Luminaire	LUM HPS POST 100W	Active	100	90435-67003	S14	CITY OF PAWTUCKET
0002	000	1	ROSELLA	AVE	606	Overhead	Distribution	Luminaire	LUM HPS RWY 70W	Active	70	90435-67003	S14	CITY OF PAWTUCKET
0005	000	1	ROSELLA	AVE	606	Overhead	Distribution	Luminaire	LUM HPS RWY 70W	Active	70	90435-67003	S14	CITY OF PAWTUCKET
0007	000	1	ROSELLA	AVE	606	Overhead	Distribution	Luminaire	LUM HPS RWY 70W	Active	70	90435-67003	S14	CITY OF PAWTUCKET
0010	000	1	ROSELLA	AVE	606	Overhead	Distribution	Luminaire	LUM HPS RWY 70W	Active	70	90435-67003	S14	CITY OF PAWTUCKET
0012	000	1	ROSELLA	AVE	606	Overhead	Distribution	Luminaire	LUM HPS RWY 70W	Active	70	90435-67003	S14	CITY OF PAWTUCKET
0001	000	1	ROSEMERE	RD	607	Overhead	Distribution	Luminaire	LUM HPS RWY 70W	Active	70	90435-67003	S14	CITY OF PAWTUCKET
0003	000	1	ROSEMERE	RD	607	Overhead	Distribution	Luminaire	LUM HPS RWY 70W	Active	70	90435-67003	S14	CITY OF PAWTUCKET
0005	000	1	ROSEMERE	RD	607	Overhead	Distribution	Luminaire	LUM HPS RWY 70W	Active	70	90435-67003	S14	CITY OF PAWTUCKET
0007	000	1	ROSEMERE	RD	607	Overhead	Distribution	Luminaire	LUM HPS RWY 70W	Active	70	90435-67003	S14	CITY OF PAWTUCKET
0009	000	1	ROSEMERE	RD	607	Overhead	Distribution	Luminaire	LUM HPS RWY 70W	Active	70	90435-67003	S14	CITY OF PAWTUCKET
0011	000	1	ROSEMERE	RD	607	Overhead	Distribution	Luminaire	LUM HPS RWY 70W	Active	70	90435-67003	S14	CITY OF PAWTUCKET
0012	000	1	ROSEMERE	RD	607	Overhead	Distribution	Luminaire	LUM HPS RWY 70W	Active	70	90435-67003	S14	CITY OF PAWTUCKET
0013	000	1	ROSEMERE	RD	607	Overhead	Distribution	Luminaire	LUM HPS RWY 50W	Active	50	90435-67003	S14	CITY OF PAWTUCKET
0014	000	1	ROSEMERE	RD	607	Overhead	Distribution	Luminaire	LUM HPS RWY 70W	Active	70	90435-67003	S14	CITY OF PAWTUCKET
0016	000	1	ROSEMERE	RD	607	Overhead	Distribution	Luminaire	LUM HPS RWY 70W	Active	70	90435-67003	S14	CITY OF PAWTUCKET
0018	000	1	ROSEMERE	RD	607	Overhead	Distribution	Luminaire	LUM HPS RWY 70W	Active	70	90435-67003	S14	CITY OF PAWTUCKET
0002	000	1	ROSEMONT	AVE	608	Overhead	Distribution	Luminaire	LUM HPS RWY 70W	Active	70	90435-67003	S14	CITY OF PAWTUCKET
0005	000	1	ROSEMONT	AVE	608	Overhead	Distribution	Luminaire	LUM HPS RWY 100W	Active	100	90435-67003	S14	CITY OF PAWTUCKET
0007	000	1	ROSEMONT	AVE	608	Overhead	Distribution	Luminaire	LUM HPS RWY 70W	Active	70	90435-67003	S14	CITY OF PAWTUCKET
0009	000	1	ROSEMONT	AVE	608	Overhead	Distribution	Luminaire	LUM HPS RWY 70W	Active	70	90435-67003	S14	CITY OF PAWTUCKET
0011	000	1	ROSEMONT	AVE	608	Overhead	Distribution	Luminaire	LUM HPS RWY 70W	Active	70	90435-67003	S14	CITY OF PAWTUCKET
0011	001	1	ROSEMONT	AVE	608	Overhead	Distribution	Luminaire	LUM HPS RWY 70W	Active	70	90435-67003	S14	CITY OF PAWTUCKET
0012	000	1	ROSEMONT	AVE	608	Overhead	Distribution	Luminaire	LUM HPS RWY 70W	Active	70	90435-67003	S14	CITY OF PAWTUCKET
0013	000	1	ROSEMONT	AVE	608	Overhead	Distribution	Luminaire	LUM HPS RWY 70W	Active	70	90435-67003	S14	CITY OF PAWTUCKET
0001	000	1	ROSEWOOD	ST	609	Overhead	Distribution	Luminaire	LUM HPS RWY 70W	Active	70	90435-67003	S14	CITY OF PAWTUCKET
0003	000	1	ROSEWOOD	ST	609	Overhead	Distribution	Luminaire	LUM HPS RWY 70W	Active	70	90435-67003	S14	CITY OF PAWTUCKET
0001	001	1	ROWE	AVE	610	Overhead	Distribution	Luminaire	LUM HPS RWY 70W	Active	70	90435-67003	S14	CITY OF PAWTUCKET
0003	000	1	ROWE	AVE	610	Overhead	Distribution	Luminaire	LUM HPS RWY 70W	Active	70	90435-67003	S14	CITY OF PAWTUCKET
0005	000	1	ROWE	AVE	610	Overhead	Distribution	Luminaire	LUM HPS RWY 70W	Active	70	90435-67003	S14	CITY OF PAWTUCKET
0007	000	1	ROWE	AVE	610	Overhead	Distribution	Luminaire	LUM HPS RWY 70W	Active	70	90435-67003	S14	CITY OF PAWTUCKET
0008	000	1	ROWE	AVE	610	Overhead	Distribution	Luminaire	LUM HPS RWY 70W	Active	70	90435-67003	S14	CITY OF PAWTUCKET
0010	000	1	ROWE	AVE	610	Overhead	Distribution	Luminaire	LUM HPS RWY 70W	Active	70	90435-67003	S14	CITY OF PAWTUCKET
0012	000	1	ROWE	AVE	610	Overhead	Distribution	Luminaire	LUM HPS RWY 70W	Active	70	90435-67003	S14	CITY OF PAWTUCKET
0014	000	1	ROWE	AVE	610	Overhead	Distribution	Luminaire	LUM HPS RWY 70W	Active	70	90435-67003	S14	CITY OF PAWTUCKET
0016	000	1	ROWE	AVE	610	Overhead	Distribution	Luminaire	LUM HPS RWY 70W	Active	70	90435-67003	S14	CITY OF PAWTUCKET
0017	000	1	ROWE	AVE	610	Overhead	Distribution	Luminaire	LUM HPS RWY 70W	Active	70	90435-67003	S14	CITY OF PAWTUCKET
0018	000	1	ROWE	AVE	610	Overhead	Distribution	Luminaire	LUM HPS RWY 70W	Active	70	90435-67003	S14	CITY OF PAWTUCKET
0020	000	1	ROWE	AVE	610	Overhead	Distribution	Luminaire	LUM HPS RWY 70W	Active	70	90435-67003	S14	CITY OF PAWTUCKET
0002	000	1	ROWLAND	ST	611	Overhead	Distribution	Luminaire	LUM HPS RWY 70W	Active	70	90435-67003	S14	CITY OF PAWTUCKET

0003	000	1	ROWLAND	ST	611	Overhead	Distribution	Luminaire	LUM HPS RWY 70W	Active	70	90435-67003	S14	CITY OF PAWTUCKET
0003	000	1	RUFUS	ST	612	Overhead	Distribution	Luminaire	LUM HPS RWY 70W	Active	70	90435-67003	S14	CITY OF PAWTUCKET
0002	000	1	RUTH	ST	613	Overhead	Distribution	Luminaire	LUM HPS RWY 70W	Active	70	90435-67003	S14	CITY OF PAWTUCKET
0004	000	1	RUTH	ST	613	Overhead	Distribution	Luminaire	LUM HPS RWY 70W	Active	70	90435-67003	S14	CITY OF PAWTUCKET
0001	000	1	SABIN	ST	614	Overhead	Distribution	Luminaire	LUM HPS RWY 70W	Active	70	90435-67003	S14	CITY OF PAWTUCKET
0002	000	1	SABIN	ST	614	Overhead	Distribution	Luminaire	LUM HPS RWY 100W	Active	100	90435-67003	S14	CITY OF PAWTUCKET
0003	000	1	SABIN	ST	614	Overhead	Distribution	Luminaire	LUM HPS RWY 100W	Active	100	90435-67003	S14	CITY OF PAWTUCKET
0004	000	1	SABIN	ST	614	Overhead	Distribution	Luminaire	LUM HPS RWY 100W	Active	100	90435-67003	S14	CITY OF PAWTUCKET
0005	000	1	SABIN	ST	614	Overhead	Distribution	Luminaire	LUM HPS RWY 100W	Active	100	90435-67003	S14	CITY OF PAWTUCKET
0006	000	1	SABIN	ST	614	Overhead	Distribution	Luminaire	LUM HPS RWY 100W	Active	100	90435-67003	S14	CITY OF PAWTUCKET
0007	000	1	SABIN	ST	614	Overhead	Distribution	Luminaire	LUM HPS RWY 100W	Active	100	90435-67003	S14	CITY OF PAWTUCKET
0008	000	1	SABIN	ST	614	Overhead	Distribution	Luminaire	LUM HPS RWY 100W	Active	100	90435-67003	S14	CITY OF PAWTUCKET
0009	000	1	SABIN	ST	614	Overhead	Distribution	Luminaire	LUM HPS RWY 100W	Active	100	90435-67003	S14	CITY OF PAWTUCKET
0010	000	1	SABIN	ST	614	Overhead	Distribution	Luminaire	LUM HPS RWY 100W	Active	100	90435-67003	S14	CITY OF PAWTUCKET
0011	000	1	SABIN	ST	614	Overhead	Distribution	Luminaire	LUM HPS RWY 100W	Active	100	90435-67003	S14	CITY OF PAWTUCKET
0012	000	1	SABIN	ST	614	Overhead	Distribution	Luminaire	LUM HPS RWY 100W	Active	100	90435-67003	S14	CITY OF PAWTUCKET
0013	000	1	SABIN	ST	614	Overhead	Distribution	Luminaire	LUM HPS RWY 100W	Active	100	90435-67003	S14	CITY OF PAWTUCKET
0014	000	1	SABIN	ST	614	Overhead	Distribution	Luminaire	LUM HPS RWY 100W	Active	100	90435-67003	S14	CITY OF PAWTUCKET
0015	000	1	SABIN	ST	614	Overhead	Distribution	Luminaire	LUM HPS RWY 100W	Active	100	90435-67003	S14	CITY OF PAWTUCKET
0016	000	1	SABIN	ST	614	Overhead	Distribution	Luminaire	LUM HPS RWY 100W	Active	100	90435-67003	S14	CITY OF PAWTUCKET
0017	000	1	SABIN	ST	614	Overhead	Distribution	Luminaire	LUM HPS RWY 100W	Active	100	90435-67003	S14	CITY OF PAWTUCKET
0018	000	1	SABIN	ST	614	Overhead	Distribution	Luminaire	LUM HPS RWY 100W	Active	100	90435-67003	S14	CITY OF PAWTUCKET
0019	000	1	SABIN	ST	614	Overhead	Distribution	Luminaire	LUM HPS RWY 100W	Active	100	90435-67003	S14	CITY OF PAWTUCKET
0020	000	1	SABIN	ST	614	Overhead	Distribution	Luminaire	LUM HPS RWY 100W	Active	100	90435-67003	S14	CITY OF PAWTUCKET
0021	000	1	SABIN	ST	614	Overhead	Distribution	Luminaire	LUM HPS RWY 100W	Active	100	90435-67003	S14	CITY OF PAWTUCKET
0022	000	1	SABIN	ST	614	Overhead	Distribution	Luminaire	LUM HPS RWY 70W	Active	70	90435-67003	S14	CITY OF PAWTUCKET
0002	000	1	SACHEM	ST	615	Overhead	Distribution	Luminaire	LUM HPS RWY 50W	Active	50	90435-67003	S14	CITY OF PAWTUCKET
0004	000	1	SACHEM	ST	615	Overhead	Distribution	Luminaire	LUM HPS RWY 70W	Active	70	90435-67003	S14	CITY OF PAWTUCKET
0006	000	1	SACHEM	ST	615	Overhead	Distribution	Luminaire	LUM HPS RWY 70W	Active	70	90435-67003	S14	CITY OF PAWTUCKET
0008	000	1	SACHEM	ST	615	Overhead	Distribution	Luminaire	LUM HPS RWY 70W	Active	70	90435-67003	S14	CITY OF PAWTUCKET
0003	000	1	SAMUEL	AVE	616	Overhead	Distribution	Luminaire	LUM HPS RWY 70W	Active	70	90435-67003	S14	CITY OF PAWTUCKET
0005	000	1	SAMUEL	AVE	616	Overhead	Distribution	Luminaire	LUM HPS RWY 70W	Active	70	90435-67003	S14	CITY OF PAWTUCKET
0006	000	1	SAMUEL	AVE	616	Overhead	Distribution	Luminaire	LUM HPS RWY 70W	Active	70	90435-67003	S14	CITY OF PAWTUCKET
0008	000	1	SAMUEL	AVE	616	Overhead	Distribution	Luminaire	LUM HPS RWY 70W	Active	70	90435-67003	S14	CITY OF PAWTUCKET
0010	000	1	SAMUEL	AVE	616	Overhead	Distribution	Luminaire	LUM HPS RWY 70W	Active	70	90435-67003	S14	CITY OF PAWTUCKET
0012	000	1	SAMUEL	AVE	616	Overhead	Distribution	Luminaire	LUM HPS RWY 70W	Active	70	90435-67003	S14	CITY OF PAWTUCKET
0014	000	1	SAMUEL	AVE	616	Overhead	Distribution	Luminaire	LUM HPS RWY 70W	Active	70	90435-67003	S14	CITY OF PAWTUCKET
0016	000	1	SAMUEL	AVE	616	Overhead	Distribution	Luminaire	LUM HPS RWY 70W	Active	70	90435-67003	S14	CITY OF PAWTUCKET
0018	000	1	SAMUEL	AVE	616	Overhead	Distribution	Luminaire	LUM HPS RWY 70W	Active	70	90435-67003	S14	CITY OF PAWTUCKET
0001	000	1	SAN ANTONIO	WAY	116	Overhead	Distribution	Luminaire	LUM HPS RWY 100W	Active	100	90435-67003	S14	CITY OF PAWTUCKET
0003	000	1	SAN ANTONIO	WAY	116	Overhead	Distribution	Luminaire	LUM HPS RWY 70W	Active	70	90435-67003	S14	CITY OF PAWTUCKET
0007	000	1	SAN ANTONIO	WAY	116	Overhead	Distribution	Luminaire	LUM HPS RWY 70W	Active	70	90435-67003	S14	CITY OF PAWTUCKET
0002	000	1	SANDO	ST	617	Overhead	Distribution	Luminaire	LUM HPS RWY 70W	Active	70	90435-67003	S14	CITY OF PAWTUCKET
0002	000	1	SANFORD	ST	618	Overhead	Distribution	Luminaire	LUM HPS RWY 70W	Active	70	90435-67003	S14	CITY OF PAWTUCKET
0004	000	1	SANFORD	ST	618	Overhead	Distribution	Luminaire	LUM HPS RWY 70W	Active	70	90435-67003	S14	CITY OF PAWTUCKET
0001	000	1	SARATOGA	AVE	619	Overhead	Distribution	Luminaire	LUM HPS RWY 70W	Active	70	90435-67003	S14	CITY OF PAWTUCKET
0002	000	1	SARATOGA	AVE	619	Overhead	Distribution	Luminaire	LUM HPS RWY 70W	Active	70	90435-67003	S14	CITY OF PAWTUCKET
0003	000	1	SARATOGA	AVE	619	Overhead	Distribution	Luminaire	LUM HPS RWY 100W	Active	100	90435-67003	S14	CITY OF PAWTUCKET
0004	000	1	SARATOGA	AVE	619	Overhead	Distribution	Luminaire	LUM HPS RWY 70W	Active	70	90435-67003	S14	CITY OF PAWTUCKET
0005	000	1	SARATOGA	AVE	619	Overhead	Distribution	Luminaire	LUM HPS RWY 70W	Active	70	90435-67003	S14	CITY OF PAWTUCKET
0006	000	1	SARATOGA	AVE	619	Overhead	Distribution	Luminaire	LUM HPS RWY 70W	Active	70	90435-67003	S14	CITY OF PAWTUCKET
0011	000	1	SARATOGA	AVE	619	Overhead	Distribution	Luminaire	LUM HPS RWY 70W	Active	70	90435-67003	S14	CITY OF PAWTUCKET
0013	000	1	SARATOGA	AVE	619	Overhead	Distribution	Luminaire	LUM HPS RWY 70W	Active	70	90435-67003	S14	CITY OF PAWTUCKET
0014	000	1	SARATOGA	AVE	619	Overhead	Distribution	Luminaire	LUM HPS RWY 100W	Active	100	90435-67003	S14	CITY OF PAWTUCKET
0015	000	1	SARATOGA	AVE	619	Overhead	Distribution	Luminaire	LUM HPS RWY 70W	Active	70	90435-67003	S14	CITY OF PAWTUCKET
0017	000	1	SARATOGA	AVE	619	Overhead	Distribution	Luminaire	LUM HPS RWY 70W	Active	70	90435-67003	S14	CITY OF PAWTUCKET
0019	000	1	SARATOGA	AVE	619	Overhead	Distribution	Luminaire	LUM HPS RWY 70W	Active	70	90435-67003	S14	CITY OF PAWTUCKET
0021	000	1	SARATOGA	AVE	619	Overhead	Distribution	Luminaire	LUM HPS RWY 70W	Active	70	90435-67003	S14	CITY OF PAWTUCKET
0023	000	1	SARATOGA	AVE	619	Overhead	Distribution	Luminaire	LUM HPS RWY 70W	Active	70	90435-67003	S14	CITY OF PAWTUCKET
0001	000	1	SAUNDER	ST	620	Overhead	Distribution	Luminaire	LUM HPS RWY 100W	Active	100	90435-67003	S14	CITY OF PAWTUCKET
0003	000	1	SAUNDERS	ST	620	Overhead	Distribution	Luminaire	LUM HPS RWY 70W	Active	70	90435-67003	S14	CITY OF PAWTUCKET
0005	000	1	SAUNDERS	ST	620	Overhead	Distribution	Luminaire	LUM HPS RWY 70W	Active	70	90435-67003	S14	CITY OF PAWTUCKET
0001	000	1	SAYLES	AVE	621	Overhead	Distribution	Luminaire	LUM HPS RWY 100W	Active	100	90435-67003	S14	CITY OF PAWTUCKET

0002	000	1	SAYLES	AVE	621	Overhead	Distribution	Luminaire	LUM HPS RWY 100W	Active	100	90435-67003	S14	CITY OF PAWTUCKET
0003	000	1	SAYLES	AVE	621	Overhead	Distribution	Luminaire	LUM HPS RWY 100W	Active	100	90435-67003	S14	CITY OF PAWTUCKET
0005	000	1	SAYLES	AVE	621	Overhead	Distribution	Luminaire	LUM HPS RWY 100W	Active	100	90435-67003	S14	CITY OF PAWTUCKET
0007	000	1	SAYLES	AVE	621	Overhead	Distribution	Luminaire	LUM HPS RWY 100W	Active	100	90435-67003	S14	CITY OF PAWTUCKET
0008	001	1	SAYLES	AVE	621	Overhead	Distribution	Luminaire	LUM HPS RWY 100W	Active	100	90435-67003	S14	CITY OF PAWTUCKET
0009	000	1	SAYLES	AVE	621	Overhead	Distribution	Luminaire	LUM HPS RWY 100W	Active	100	90435-67003	S14	CITY OF PAWTUCKET
0011	000	1	SAYLES	AVE	621	Overhead	Distribution	Luminaire	LUM HPS RWY 100W	Active	100	90435-67003	S14	CITY OF PAWTUCKET
0015	000	1	SAYLES	AVE	621	Overhead	Distribution	Luminaire	LUM HPS RWY 70W	Active	70	90435-67003	S14	CITY OF PAWTUCKET
0016	000	1	SAYLES	AVE	621	Overhead	Distribution	Luminaire	LUM HPS RWY 70W	Active	70	90435-67003	S14	CITY OF PAWTUCKET
0019	000	1	SAYLES	AVE	621	Overhead	Distribution	Luminaire	LUM HPS RWY 70W	Active	70	90435-67003	S14	CITY OF PAWTUCKET
0021	000	1	SAYLES	AVE	621	Overhead	Distribution	Luminaire	LUM HPS RWY 70W	Active	70	90435-67003	S14	CITY OF PAWTUCKET
0022	001	1	SAYLES	AVE	621	Overhead	Distribution	Luminaire	LUM HPS RWY 70W	Active	70	90435-67003	S14	CITY OF PAWTUCKET
0024	000	1	SAYLES	AVE	621	Overhead	Distribution	Luminaire	LUM HPS RWY 70W	Active	70	90435-67003	S14	CITY OF PAWTUCKET
0026	000	1	SAYLES	AVE	621	Overhead	Distribution	Luminaire	LUM HPS RWY 70W	Active	70	90435-67003	S14	CITY OF PAWTUCKET
0028	000	1	SAYLES	AVE	621	Overhead	Distribution	Luminaire	LUM HPS RWY 70W	Active	70	90435-67003	S14	CITY OF PAWTUCKET
0029	000	1	SAYLES	AVE	621	Overhead	Distribution	Luminaire	LUM HPS RWY 70W	Active	70	90435-67003	S14	CITY OF PAWTUCKET
0001	000	1	SCARBOROUGH	RD	622	Overhead	Distribution	Luminaire	LUM HPS RWY 70W	Active	70	90435-67003	S14	CITY OF PAWTUCKET
0003	000	1	SCARBOROUGH	RD	622	Overhead	Distribution	Luminaire	LUM HPS RWY 70W	Active	70	90435-67003	S14	CITY OF PAWTUCKET
0005	000	1	SCARBOROUGH	RD	622	Overhead	Distribution	Luminaire	LUM HPS RWY 70W	Active	70	90435-67003	S14	CITY OF PAWTUCKET
0006	001	1	SCARBOROUGH	RD	622	Overhead	Distribution	Luminaire	LUM HPS RWY 70W	Active	70	90435-67003	S14	CITY OF PAWTUCKET
0007	001	1	SCARBOROUGH	RD	622	Overhead	Distribution	Luminaire	LUM HPS RWY 70W	Active	70	90435-67003	S14	CITY OF PAWTUCKET
0002	000	1	SCHILLER	ST	623	Overhead	Distribution	Luminaire	LUM HPS RWY 70W	Active	70	90435-67003	S14	CITY OF PAWTUCKET
0003	000	1	SCHILLER	ST	623	Overhead	Distribution	Luminaire	LUM HPS RWY 70W	Active	70	90435-67003	S14	CITY OF PAWTUCKET
0004	000	1	SCHILLER	ST	623	Overhead	Distribution	Luminaire	LUM HPS RWY 70W	Active	70	90435-67003	S14	CITY OF PAWTUCKET
0003	000	1	SCHOFIELD	ST	624	Overhead	Distribution	Luminaire	LUM HPS RWY 70W	Active	70	90435-67003	S14	CITY OF PAWTUCKET
0001	000	0	SCHOOL	ST	625	Underground	Streetlighting	Pole	POLE METAL =>25FT	Active	0	90435-67003	S14	CITY OF PAWTUCKET
0001	000	1	SCHOOL	ST	625	Underground	Streetlighting	Luminaire	LUM HPS RWY 250W	Active	250	90435-67003	S14	CITY OF PAWTUCKET
0002	000	0	SCHOOL	ST	625	Underground	Streetlighting	Pole	POLE METAL =>25FT	Active	0	90435-67003	S14	CITY OF PAWTUCKET
0002	000	1	SCHOOL	ST	625	Underground	Streetlighting	Luminaire	LUM HPS RWY 250W	Active	250	90435-67003	S14	CITY OF PAWTUCKET
0003	000	0	SCHOOL	ST	625	Underground	Streetlighting	Pole	POLE METAL =>25FT	Active	0	90435-67003	S14	CITY OF PAWTUCKET
0003	000	1	SCHOOL	ST	625	Underground	Streetlighting	Luminaire	LUM HPS RWY 250W	Active	250	90435-67003	S14	CITY OF PAWTUCKET
0005	000	0	SCHOOL	ST	625	Underground	Streetlighting	Pole	POLE METAL =>25FT	Active	0	90435-67003	S14	CITY OF PAWTUCKET
0005	000	1	SCHOOL	ST	625	Underground	Streetlighting	Luminaire	LUM HPS RWY 250W	Active	250	90435-67003	S14	CITY OF PAWTUCKET
0006	000	0	SCHOOL	ST	625	Underground	Streetlighting	Pole	POLE METAL =>25FT	Active	0	90435-67003	S14	CITY OF PAWTUCKET
0006	000	1	SCHOOL	ST	625	Underground	Streetlighting	Luminaire	LUM HPS RWY 250W	Active	250	90435-67003	S14	CITY OF PAWTUCKET
0007	000	0	SCHOOL	ST	625	Underground	Streetlighting	Pole	POLE METAL =>25FT	Active	0	90435-67003	S14	CITY OF PAWTUCKET
0007	000	1	SCHOOL	ST	625	Underground	Streetlighting	Luminaire	LUM HPS RWY 250W	Active	250	90435-67003	S14	CITY OF PAWTUCKET
0008	000	0	SCHOOL	ST	625	Underground	Streetlighting	Pole	POLE METAL =>25FT	Active	0	90435-67003	S14	CITY OF PAWTUCKET
0008	000	1	SCHOOL	ST	625	Underground	Streetlighting	Luminaire	LUM HPS RWY 250W	Active	250	90435-67003	S14	CITY OF PAWTUCKET
0009	000	0	SCHOOL	ST	625	Underground	Streetlighting	Pole	POLE METAL =>25FT	Active	0	90435-67003	S14	CITY OF PAWTUCKET
0009	000	1	SCHOOL	ST	625	Underground	Streetlighting	Luminaire	LUM HPS RWY 250W	Active	250	90435-67003	S14	CITY OF PAWTUCKET
0010	000	0	SCHOOL	ST	625	Underground	Streetlighting	Pole	POLE METAL =>25FT	Active	0	90435-67003	S14	CITY OF PAWTUCKET
0010	000	1	SCHOOL	ST	625	Underground	Streetlighting	Luminaire	LUM HPS RWY 250W	Active	250	90435-67003	S14	CITY OF PAWTUCKET
0011	000	0	SCHOOL	ST	625	Underground	Streetlighting	Pole	POLE METAL =>25FT	Active	0	90435-67003	S14	CITY OF PAWTUCKET
0011	000	1	SCHOOL	ST	625	Underground	Streetlighting	Luminaire	LUM HPS RWY 250W	Active	250	90435-67003	S14	CITY OF PAWTUCKET
0012	000	0	SCHOOL	ST	625	Underground	Streetlighting	Pole	POLE METAL =>25FT	Active	0	90435-67003	S14	CITY OF PAWTUCKET
0012	000	1	SCHOOL	ST	625	Underground	Streetlighting	Luminaire	LUM HPS RWY 250W	Active	250	90435-67003	S14	CITY OF PAWTUCKET
0014	000	1	SCHOOL	ST	625	Overhead	Distribution	Luminaire	LUM HPS RWY 250W	Active	250	90435-67003	S14	CITY OF PAWTUCKET
0015	000	1	SCHOOL	ST	625	Overhead	Distribution	Luminaire	LUM HPS RWY 250W	Active	250	90435-67003	S14	CITY OF PAWTUCKET
0020	000	1	SCHOOL	ST	625	Overhead	Distribution	Luminaire	LUM HPS RWY 250W	Active	250	90435-67003	S14	CITY OF PAWTUCKET
0022	000	1	SCHOOL	ST	625	Overhead	Distribution	Luminaire	LUM HPS RWY 250W	Active	250	90435-67003	S14	CITY OF PAWTUCKET
0024	000	1	SCHOOL	ST	625	Overhead	Distribution	Luminaire	LUM HPS RWY 250W	Active	250	90435-67003	S14	CITY OF PAWTUCKET
0025	000	1	SCHOOL	ST	625	Overhead	Distribution	Luminaire	LUM HPS RWY 250W	Active	250	90435-67003	S14	CITY OF PAWTUCKET
0026	000	1	SCHOOL	ST	625	Overhead	Distribution	Luminaire	LUM HPS RWY 250W	Active	250	90435-67003	S14	CITY OF PAWTUCKET
0027	000	1	SCHOOL	ST	625	Overhead	Distribution	Luminaire	LUM HPS RWY 250W	Active	250	90435-67003	S14	CITY OF PAWTUCKET
0028	000	1	SCHOOL	ST	625	Overhead	Distribution	Luminaire	LUM HPS RWY 250W	Active	250	90435-67003	S14	CITY OF PAWTUCKET
0029	000	1	SCHOOL	ST	625	Overhead	Distribution	Luminaire	LUM HPS RWY 250W	Active	250	90435-67003	S14	CITY OF PAWTUCKET
0030	000	1	SCHOOL	ST	625	Overhead	Distribution	Luminaire	LUM HPS RWY 250W	Active	250	90435-67003	S14	CITY OF PAWTUCKET
0031	084	1	SCHOOL	ST	625	Overhead	Distribution	Luminaire	LUM HPS RWY 250W	Active	250	90435-67003	S14	CITY OF PAWTUCKET
0032	000	1	SCHOOL	ST	625	Overhead	Distribution	Luminaire	LUM HPS RWY 250W	Active	250	90435-67003	S14	CITY OF PAWTUCKET
0033	000	1	SCHOOL	ST	625	Overhead	Distribution	Luminaire	LUM HPS RWY 250W	Active	250	90435-67003	S14	CITY OF PAWTUCKET
0033	011	1	SCHOOL	ST	625	Overhead	Distribution	Luminaire	LUM HPS RWY 70W	Active	70	90435-67003	S14	CITY OF PAWTUCKET
0033	022	1	SCHOOL	ST	625	Overhead	Distribution	Luminaire	LUM HPS RWY 70W	Active	70	90435-67003	S14	CITY OF PAWTUCKET

0034	000	1	SCHOOL	ST	625	Overhead	Distribution	Luminaire	LUM HPS RWY 250W	Active	250	90435-67003	S14	CITY OF PAWTUCKET
0035	000	1	SCHOOL	ST	625	Overhead	Distribution	Luminaire	LUM HPS RWY 250W	Active	250	90435-67003	S14	CITY OF PAWTUCKET
0036	000	1	SCHOOL	ST	625	Overhead	Distribution	Luminaire	LUM HPS RWY 250W	Active	250	90435-67003	S14	CITY OF PAWTUCKET
0037	000	1	SCHOOL	ST	625	Overhead	Distribution	Luminaire	LUM HPS RWY 250W	Active	250	90435-67003	S14	CITY OF PAWTUCKET
0038	000	1	SCHOOL	ST	625	Overhead	Distribution	Luminaire	LUM HPS RWY 250W	Active	250	90435-67003	S14	CITY OF PAWTUCKET
0040	000	1	SCHOOL	ST	625	Overhead	Distribution	Luminaire	LUM HPS RWY 250W	Active	250	90435-67003	S14	CITY OF PAWTUCKET
0041	001	1	SCHOOL	ST	625	Overhead	Distribution	Luminaire	LUM HPS RWY 100W	Active	100	90435-67003	S14	CITY OF PAWTUCKET
0042	000	1	SCHOOL	ST	625	Overhead	Distribution	Luminaire	LUM HPS RWY 250W	Active	250	90435-67003	S14	CITY OF PAWTUCKET
0043	000	1	SCHOOL	ST	625	Overhead	Distribution	Luminaire	LUM HPS RWY 250W	Active	250	90435-67003	S14	CITY OF PAWTUCKET
0045	000	1	SCHOOL	ST	625	Overhead	Distribution	Luminaire	LUM HPS RWY 250W	Active	250	90435-67003	S14	CITY OF PAWTUCKET
0047	000	1	SCHOOL	ST	625	Overhead	Distribution	Luminaire	LUM HPS RWY 250W	Active	250	90435-67003	S14	CITY OF PAWTUCKET
0048	000	1	SCHOOL	ST	625	Overhead	Distribution	Luminaire	LUM HPS RWY 70W	Active	70	90435-67003	S14	CITY OF PAWTUCKET
0049	000	1	SCHOOL	ST	625	Overhead	Distribution	Luminaire	LUM HPS RWY 100W	Active	100	90435-67003	S14	CITY OF PAWTUCKET
0050	000	1	SCHOOL	ST	625	Overhead	Distribution	Luminaire	LUM HPS RWY 100W	Active	100	90435-67003	S14	CITY OF PAWTUCKET
0051	000	1	SCHOOL	ST	625	Overhead	Distribution	Luminaire	LUM HPS RWY 250W	Active	250	90435-67003	S14	CITY OF PAWTUCKET
0052	000	1	SCHOOL	ST	625	Overhead	Distribution	Luminaire	LUM HPS RWY 250W	Active	250	90435-67003	S14	CITY OF PAWTUCKET
0053	000	1	SCHOOL	ST	625	Overhead	Distribution	Luminaire	LUM HPS RWY 100W	Active	100	90435-67003	S14	CITY OF PAWTUCKET
0054	000	1	SCHOOL	ST	625	Overhead	Distribution	Luminaire	LUM HPS RWY 100W	Active	100	90435-67003	S14	CITY OF PAWTUCKET
0055	000	1	SCHOOL	ST	625	Overhead	Distribution	Luminaire	LUM HPS RWY 100W	Active	100	90435-67003	S14	CITY OF PAWTUCKET
0056	000	1	SCHOOL	ST	625	Overhead	Distribution	Luminaire	LUM HPS RWY 100W	Active	100	90435-67003	S14	CITY OF PAWTUCKET
0057	000	1	SCHOOL	ST	625	Overhead	Distribution	Luminaire	LUM HPS RWY 100W	Active	100	90435-67003	S14	CITY OF PAWTUCKET
0058	000	1	SCHOOL	ST	625	Overhead	Distribution	Luminaire	LUM HPS RWY 100W	Active	100	90435-67003	S14	CITY OF PAWTUCKET
0059	000	1	SCHOOL	ST	625	Overhead	Distribution	Luminaire	LUM HPS RWY 100W	Active	100	90435-67003	S14	CITY OF PAWTUCKET
0062	000	1	SCHOOL	ST	625	Overhead	Distribution	Luminaire	LUM HPS RWY 250W	Active	250	90435-67003	S14	CITY OF PAWTUCKET
0064	000	1	SCHOOL	ST	625	Overhead	Distribution	Luminaire	LUM HPS RWY 100W	Active	100	90435-67003	S14	CITY OF PAWTUCKET
0065	000	1	SCHOOL	ST	625	Overhead	Distribution	Luminaire	LUM HPS RWY 250W	Active	250	90435-67003	S14	CITY OF PAWTUCKET
0066	000	1	SCHOOL	ST	625	Overhead	Distribution	Luminaire	LUM HPS RWY 100W	Active	100	90435-67003	S14	CITY OF PAWTUCKET
0067	000	1	SCHOOL	ST	625	Overhead	Distribution	Luminaire	LUM HPS RWY 70W	Active	70	90435-67003	S14	CITY OF PAWTUCKET
0070	000	1	SCHOOL	ST	625	Overhead	Distribution	Luminaire	LUM HPS RWY 100W	Active	100	90435-67003	S14	CITY OF PAWTUCKET
0072	000	1	SCHOOL	ST	625	Overhead	Distribution	Luminaire	LUM HPS RWY 100W	Active	100	90435-67003	S14	CITY OF PAWTUCKET
0073	000	1	SCHOOL	ST	625	Overhead	Distribution	Luminaire	LUM HPS RWY 100W	Active	100	90435-67003	S14	CITY OF PAWTUCKET
0074	000	1	SCHOOL	ST	625	Overhead	Distribution	Luminaire	LUM HPS RWY 100W	Active	100	90435-67003	S14	CITY OF PAWTUCKET
0002	000	1	SCOTT	ST	626	Overhead	Distribution	Luminaire	LUM HPS RWY 70W	Active	70	90435-67003	S14	CITY OF PAWTUCKET
0003	000	1	SCOTT	ST	626	Overhead	Distribution	Luminaire	LUM HPS RWY 70W	Active	70	90435-67003	S14	CITY OF PAWTUCKET
0004	000	1	SCOTT	ST	626	Overhead	Distribution	Luminaire	LUM HPS RWY 70W	Active	70	90435-67003	S14	CITY OF PAWTUCKET
0006	000	1	SCOTT	ST	626	Overhead	Distribution	Luminaire	LUM HPS RWY 70W	Active	70	90435-67003	S14	CITY OF PAWTUCKET
0001	000	1	SEABISCUIT	PL	751	Overhead	Distribution	Luminaire	LUM HPS RWY 70W	Active	70	90435-67003	S14	CITY OF PAWTUCKET
0003	000	1	SEABISCUIT	PL	751	Overhead	Distribution	Luminaire	LUM HPS RWY 70W	Active	70	90435-67003	S14	CITY OF PAWTUCKET
0005	000	1	SEABISCUIT	PL	751	Overhead	Distribution	Luminaire	LUM HPS RWY 70W	Active	70	90435-67003	S14	CITY OF PAWTUCKET
0007	000	1	SEABISCUIT	PL	751	Overhead	Distribution	Luminaire	LUM HPS RWY 70W	Active	70	90435-67003	S14	CITY OF PAWTUCKET
0001	000	1	SEBA KENT	RD	627	Overhead	Distribution	Luminaire	LUM HPS RWY 70W	Active	70	90435-67003	S14	CITY OF PAWTUCKET
0002	000	1	SEBA KENT	RD	627	Overhead	Distribution	Luminaire	LUM HPS RWY 70W	Active	70	90435-67003	S14	CITY OF PAWTUCKET
0003	000	1	SEBA KENT	RD	627	Overhead	Distribution	Luminaire	LUM HPS RWY 100W	Active	100	90435-67003	S14	CITY OF PAWTUCKET
0004	000	1	SEBA KENT	RD	627	Overhead	Distribution	Luminaire	LUM HPS RWY 70W	Active	70	90435-67003	S14	CITY OF PAWTUCKET
0005	000	1	SEBA KENT	RD	627	Overhead	Distribution	Luminaire	LUM HPS RWY 70W	Active	70	90435-67003	S14	CITY OF PAWTUCKET
0006	000	1	SEBA KENT	RD	627	Overhead	Distribution	Luminaire	LUM HPS RWY 70W	Active	70	90435-67003	S14	CITY OF PAWTUCKET
0007	000	1	SEBA KENT	RD	627	Overhead	Distribution	Luminaire	LUM HPS RWY 70W	Active	70	90435-67003	S14	CITY OF PAWTUCKET
0008	000	1	SEBA KENT	RD	627	Overhead	Distribution	Luminaire	LUM HPS RWY 70W	Active	70	90435-67003	S14	CITY OF PAWTUCKET
0001	000	1	SECOND	ST	628	Overhead	Distribution	Luminaire	LUM HPS RWY 70W	Active	70	90435-67003	S14	CITY OF PAWTUCKET
0003	000	1	SECOND	ST	628	Overhead	Distribution	Luminaire	LUM HPS RWY 70W	Active	70	90435-67003	S14	CITY OF PAWTUCKET
0005	000	1	SECOND	ST	628	Overhead	Distribution	Luminaire	LUM HPS RWY 70W	Active	70	90435-67003	S14	CITY OF PAWTUCKET
0009	000	1	SECOND	ST	628	Overhead	Distribution	Luminaire	LUM HPS RWY 70W	Active	70	90435-67003	S14	CITY OF PAWTUCKET
0010	000	1	SECOND	ST	628	Overhead	Distribution	Luminaire	LUM HPS RWY 70W	Active	70	90435-67003	S14	CITY OF PAWTUCKET
0011	000	1	SECOND	ST	628	Overhead	Distribution	Luminaire	LUM HPS RWY 70W	Active	70	90435-67003	S14	CITY OF PAWTUCKET
0012	000	1	SECOND	ST	628	Overhead	Distribution	Luminaire	LUM HPS RWY 70W	Active	70	90435-67003	S14	CITY OF PAWTUCKET
0014	000	1	SECOND	ST	628	Overhead	Distribution	Luminaire	LUM HPS RWY 70W	Active	70	90435-67003	S14	CITY OF PAWTUCKET
0016	000	1	SECOND	ST	628	Overhead	Distribution	Luminaire	LUM HPS RWY 70W	Active	70	90435-67003	S14	CITY OF PAWTUCKET
0017	000	1	SECOND	ST	628	Overhead	Distribution	Luminaire	LUM HPS RWY 50W	Active	50	90435-67003	S14	CITY OF PAWTUCKET
0001	000	1	SENATE	ST	629	Overhead	Distribution	Luminaire	LUM HPS RWY 50W	Active	50	90435-67003	S14	CITY OF PAWTUCKET
0003	000	1	SENATE	ST	629	Overhead	Distribution	Luminaire	LUM HPS RWY 70W	Active	70	90435-67003	S14	CITY OF PAWTUCKET
0007	000	1	SENATE	ST	629	Overhead	Distribution	Luminaire	LUM HPS RWY 70W	Active	70	90435-67003	S14	CITY OF PAWTUCKET
0008	000	1	SENATE	ST	629	Overhead	Distribution	Luminaire	LUM HPS RWY 70W	Active	70	90435-67003	S14	CITY OF PAWTUCKET
0011	000	1	SENATE	ST	629	Overhead	Distribution	Luminaire	LUM HPS RWY 70W	Active	70	90435-67003	S14	CITY OF PAWTUCKET

0013	000	1	SENATE	ST	629	Overhead	Distribution	Luminaire	LUM HPS RWY 70W	Active	70	90435-67003	S14	CITY OF PAWTUCKET
0015	000	1	SENATE	ST	629	Overhead	Distribution	Luminaire	LUM HPS RWY 70W	Active	70	90435-67003	S14	CITY OF PAWTUCKET
0017	000	1	SENATE	ST	629	Overhead	Distribution	Luminaire	LUM HPS RWY 70W	Active	70	90435-67003	S14	CITY OF PAWTUCKET
0018	000	1	SENATE	ST	629	Overhead	Distribution	Luminaire	LUM HPS RWY 70W	Active	70	90435-67003	S14	CITY OF PAWTUCKET
0019	000	1	SENATE	ST	629	Overhead	Distribution	Luminaire	LUM HPS RWY 70W	Active	70	90435-67003	S14	CITY OF PAWTUCKET
0020	000	1	SENATE	ST	629	Overhead	Distribution	Luminaire	LUM HPS RWY 70W	Active	70	90435-67003	S14	CITY OF PAWTUCKET
0001	000	1	SENECA	AVE	630	Overhead	Distribution	Luminaire	LUM HPS RWY 250W	Active	250	90435-67003	S14	CITY OF PAWTUCKET
0003	000	1	SENECA	AVE	630	Overhead	Distribution	Luminaire	LUM HPS RWY 70W	Active	70	90435-67003	S14	CITY OF PAWTUCKET
0005	000	1	SENECA	AVE	630	Overhead	Distribution	Luminaire	LUM HPS RWY 70W	Active	70	90435-67003	S14	CITY OF PAWTUCKET
0007	000	1	SENECA	AVE	630	Overhead	Distribution	Luminaire	LUM HPS RWY 70W	Active	70	90435-67003	S14	CITY OF PAWTUCKET
0009	000	1	SENECA	AVE	630	Overhead	Distribution	Luminaire	LUM HPS RWY 70W	Active	70	90435-67003	S14	CITY OF PAWTUCKET
0010	000	1	SENECA	AVE	630	Overhead	Distribution	Luminaire	LUM HPS RWY 70W	Active	70	90435-67003	S14	CITY OF PAWTUCKET
0012	000	1	SENECA	AVE	630	Overhead	Distribution	Luminaire	LUM HPS RWY 70W	Active	70	90435-67003	S14	CITY OF PAWTUCKET
0014	000	1	SENECA	AVE	630	Overhead	Distribution	Luminaire	LUM HPS RWY 70W	Active	70	90435-67003	S14	CITY OF PAWTUCKET
0015	000	1	SENECA	AVE	630	Overhead	Distribution	Luminaire	LUM HPS RWY 70W	Active	70	90435-67003	S14	CITY OF PAWTUCKET
0016	000	1	SENECA	AVE	630	Overhead	Distribution	Luminaire	LUM HPS RWY 70W	Active	70	90435-67003	S14	CITY OF PAWTUCKET
0018	000	1	SENECA	AVE	630	Overhead	Distribution	Luminaire	LUM HPS RWY 70W	Active	70	90435-67003	S14	CITY OF PAWTUCKET
0001	000	1	SERVICE	RD	769	Overhead	Distribution	Luminaire	LUM HPS RWY 70W	Active	70	90435-67003	S14	CITY OF PAWTUCKET
0002	000	1	SERVICE	RD	769	Overhead	Distribution	Luminaire	LUM HPS RWY 70W	Active	70	90435-67003	S14	CITY OF PAWTUCKET
0003	000	1	SERVICE	RD	769	Overhead	Distribution	Luminaire	LUM HPS RWY 70W	Active	70	90435-67003	S14	CITY OF PAWTUCKET
0004	000	1	SERVICE	RD	769	Overhead	Distribution	Luminaire	LUM HPS RWY 70W	Active	70	90435-67003	S14	CITY OF PAWTUCKET
0005	000	1	SERVICE	RD	769	Overhead	Distribution	Luminaire	LUM HPS RWY 70W	Active	70	90435-67003	S14	CITY OF PAWTUCKET
0006	000	1	SERVICE	RD	769	Overhead	Distribution	Luminaire	LUM HPS RWY 70W	Active	70	90435-67003	S14	CITY OF PAWTUCKET
0007	000	1	SERVICE	RD	769	Overhead	Distribution	Luminaire	LUM HPS RWY 70W	Active	70	90435-67003	S14	CITY OF PAWTUCKET
0008	000	1	SERVICE	RD	769	Overhead	Distribution	Luminaire	LUM HPS RWY 70W	Active	70	90435-67003	S14	CITY OF PAWTUCKET
0003	000	1	SHARON	AVE	631	Overhead	Distribution	Luminaire	LUM HPS RWY 70W	Active	70	90435-67003	S14	CITY OF PAWTUCKET
0005	000	1	SHARON	AVE	631	Overhead	Distribution	Luminaire	LUM HPS RWY 70W	Active	70	90435-67003	S14	CITY OF PAWTUCKET
0008	000	1	SHARON	AVE	631	Overhead	Distribution	Luminaire	LUM HPS RWY 70W	Active	70	90435-67003	S14	CITY OF PAWTUCKET
0011	000	1	SHARON	AVE	631	Overhead	Distribution	Luminaire	LUM HPS RWY 70W	Active	70	90435-67003	S14	CITY OF PAWTUCKET
0012	000	1	SHARON	AVE	631	Overhead	Distribution	Luminaire	LUM HPS RWY 70W	Active	70	90435-67003	S14	CITY OF PAWTUCKET
0013	000	1	SHARON	AVE	631	Overhead	Distribution	Luminaire	LUM HPS RWY 70W	Active	70	90435-67003	S14	CITY OF PAWTUCKET
0014	000	1	SHARON	AVE	631	Overhead	Distribution	Luminaire	LUM HPS RWY 70W	Active	70	90435-67003	S14	CITY OF PAWTUCKET
0016	000	1	SHARON	AVE	631	Overhead	Distribution	Luminaire	LUM HPS RWY 70W	Active	70	90435-67003	S14	CITY OF PAWTUCKET
0002	000	1	SHEFFIELD	AVE	633	Overhead	Distribution	Luminaire	LUM HPS RWY 70W	Active	70	90435-67003	S14	CITY OF PAWTUCKET
0004	000	1	SHEFFIELD	AVE	633	Overhead	Distribution	Luminaire	LUM HPS RWY 70W	Active	70	90435-67003	S14	CITY OF PAWTUCKET
0006	000	1	SHEFFIELD	AVE	633	Overhead	Distribution	Luminaire	LUM HPS RWY 70W	Active	70	90435-67003	S14	CITY OF PAWTUCKET
0007	000	1	SHEFFIELD	AVE	633	Overhead	Distribution	Luminaire	LUM HPS RWY 70W	Active	70	90435-67003	S14	CITY OF PAWTUCKET
0008	001	1	SHEFFIELD	AVE	633	Overhead	Distribution	Luminaire	LUM HPS RWY 70W	Active	70	90435-67003	S14	CITY OF PAWTUCKET
0010	000	1	SHEFFIELD	AVE	633	Overhead	Distribution	Luminaire	LUM HPS RWY 70W	Active	70	90435-67003	S14	CITY OF PAWTUCKET
0012	000	1	SHEFFIELD	AVE	633	Overhead	Distribution	Luminaire	LUM HPS RWY 70W	Active	70	90435-67003	S14	CITY OF PAWTUCKET
0002	000	1	SHERMAN	ST	634	Overhead	Distribution	Luminaire	LUM HPS RWY 70W	Active	70	90435-67003	S14	CITY OF PAWTUCKET
0003	000	1	SHERMAN	ST	634	Overhead	Distribution	Luminaire	LUM HPS RWY 70W	Active	70	90435-67003	S14	CITY OF PAWTUCKET
0005	000	1	SHERMAN	ST	634	Overhead	Distribution	Luminaire	LUM HPS RWY 70W	Active	70	90435-67003	S14	CITY OF PAWTUCKET
0009	000	1	SHERMAN	ST	634	Overhead	Distribution	Luminaire	LUM HPS RWY 70W	Active	70	90435-67003	S14	CITY OF PAWTUCKET
0011	000	1	SHERMAN	ST	634	Overhead	Distribution	Luminaire	LUM HPS RWY 70W	Active	70	90435-67003	S14	CITY OF PAWTUCKET
0012	000	1	SHERMAN	ST	634	Overhead	Distribution	Luminaire	LUM HPS RWY 70W	Active	70	90435-67003	S14	CITY OF PAWTUCKET
0013	000	1	SHERMAN	ST	634	Overhead	Distribution	Luminaire	LUM HPS RWY 70W	Active	70	90435-67003	S14	CITY OF PAWTUCKET
0018	000	1	SHERMAN	ST	634	Overhead	Distribution	Luminaire	LUM HPS RWY 70W	Active	70	90435-67003	S14	CITY OF PAWTUCKET
0022	000	1	SHERMAN	ST	634	Overhead	Distribution	Luminaire	LUM HPS RWY 70W	Active	70	90435-67003	S14	CITY OF PAWTUCKET
0023	000	1	SHERMAN	ST	634	Overhead	Distribution	Luminaire	LUM HPS RWY 70W	Active	70	90435-67003	S14	CITY OF PAWTUCKET
0023	000	2	SHERMAN	ST	634	Overhead	Distribution	Luminaire	LUM HPS FLD 400W	Active	400	3371-64002	S14	CITY OF PAWTUCKET
0001	000	1	SHOREHAM	CT	635	Overhead	Distribution	Luminaire	LUM HPS RWY 70W	Active	70	90435-67003	S14	CITY OF PAWTUCKET
0002	000	1	SHOREHAM	CT	635	Overhead	Distribution	Luminaire	LUM HPS RWY 70W	Active	70	90435-67003	S14	CITY OF PAWTUCKET
0002	000	1	SHORT	ST	636	Overhead	Distribution	Luminaire	LUM HPS RWY 70W	Active	70	90435-67003	S14	CITY OF PAWTUCKET
0001	000	1	SISSON	ST	637	Overhead	Distribution	Luminaire	LUM HPS RWY 70W	Active	70	90435-67003	S14	CITY OF PAWTUCKET
0003	000	1	SISSON	ST	637	Overhead	Distribution	Luminaire	LUM HPS RWY 70W	Active	70	90435-67003	S14	CITY OF PAWTUCKET
0008	000	1	SISSON	ST	637	Overhead	Distribution	Luminaire	LUM HPS RWY 70W	Active	70	90435-67003	S14	CITY OF PAWTUCKET
0009	000	1	SISSON	ST	637	Overhead	Distribution	Luminaire	LUM HPS RWY 100W	Active	100	90435-67003	S14	CITY OF PAWTUCKET
0011	000	1	SISSON	ST	637	Overhead	Distribution	Luminaire	LUM HPS RWY 100W	Active	100	90435-67003	S14	CITY OF PAWTUCKET
0014	000	1	SISSON	ST	637	Overhead	Distribution	Luminaire	LUM HPS RWY 70W	Active	70	90435-67003	S14	CITY OF PAWTUCKET
0016	000	1	SISSON	ST	637	Overhead	Distribution	Luminaire	LUM HPS FLD 250W	Active	250	15698-26009	S14	PAWTUCKET SCHOOL DEP
0016	000	2	SISSON	ST	637	Overhead	Distribution	Luminaire	LUM HPS RWY 70W	Active	70	90435-67003	S14	CITY OF PAWTUCKET
0017	000	1	SISSON	ST	637	Overhead	Distribution	Luminaire	LUM HPS RWY 100W	Active	100	90435-67003	S14	CITY OF PAWTUCKET

0018	000	1	SISSON	ST	637	Overhead	Distribution	Luminaire	LUM HPS RWY 100W	Active	100	90435-67003	S14	CITY OF PAWTUCKET
0019	000	1	SISSON	ST	637	Overhead	Distribution	Luminaire	LUM HPS FLD 250W	Active	250	15698-26009	S14	PAWTUCKET SCHOOL DEP
0019	000	2	SISSON	ST	637	Overhead	Distribution	Luminaire	LUM HPS RWY 100W	Active	100	90435-67003	S14	CITY OF PAWTUCKET
0022	000	1	SISSON	ST	637	Overhead	Distribution	Luminaire	LUM HPS RWY 70W	Active	70	90435-67003	S14	CITY OF PAWTUCKET
0024	000	1	SISSON	ST	637	Overhead	Distribution	Luminaire	LUM HPS RWY 100W	Active	100	90435-67003	S14	CITY OF PAWTUCKET
0025	000	1	SISSON	ST	637	Overhead	Distribution	Luminaire	LUM HPS RWY 70W	Active	70	90435-67003	S14	CITY OF PAWTUCKET
0002	000	1	SLADE	ST	638	Overhead	Distribution	Luminaire	LUM HPS RWY 70W	Active	70	90435-67003	S14	CITY OF PAWTUCKET
0004	000	1	SLADE	ST	638	Overhead	Distribution	Luminaire	LUM HPS RWY 70W	Active	70	90435-67003	S14	CITY OF PAWTUCKET
0006	000	1	SLADE	ST	638	Overhead	Distribution	Luminaire	LUM HPS RWY 70W	Active	70	90435-67003	S14	CITY OF PAWTUCKET
0008	000	1	SLADE	ST	638	Overhead	Distribution	Luminaire	LUM HPS RWY 70W	Active	70	90435-67003	S14	CITY OF PAWTUCKET
0010	000	1	SLADE	ST	638	Overhead	Distribution	Luminaire	LUM HPS RWY 70W	Active	70	90435-67003	S14	CITY OF PAWTUCKET
0002	000	1	SLATER	ST	639	Overhead	Distribution	Luminaire	LUM HPS RWY 70W	Active	70	90435-67003	S14	CITY OF PAWTUCKET
0003	000	1	SLATER	ST	639	Overhead	Distribution	Luminaire	LUM HPS RWY 100W	Active	100	90435-67003	S14	CITY OF PAWTUCKET
0004	000	1	SLATER	ST	639	Overhead	Distribution	Luminaire	LUM HPS RWY 70W	Active	70	90435-67003	S14	CITY OF PAWTUCKET
0004	001	1	SLATER	ST	639	Overhead	Distribution	Luminaire	LUM HPS RWY 100W	Active	100	90435-67003	S14	CITY OF PAWTUCKET
0006	000	1	SLATER	ST	639	Overhead	Distribution	Luminaire	LUM HPS RWY 250W	Active	250	90435-67003	S14	CITY OF PAWTUCKET
0007	000	1	SLATER	ST	639	Overhead	Distribution	Luminaire	LUM HPS RWY 250W	Active	250	90435-67003	S14	CITY OF PAWTUCKET
0008	000	1	SLATER	ST	639	Overhead	Distribution	Luminaire	LUM HPS RWY 100W	Active	100	90435-67003	S14	CITY OF PAWTUCKET
0009	000	1	SLATER	ST	639	Overhead	Distribution	Luminaire	LUM HPS RWY 100W	Active	100	90435-67003	S14	CITY OF PAWTUCKET
0010	000	1	SLATER	ST	639	Overhead	Distribution	Luminaire	LUM HPS RWY 100W	Active	100	90435-67003	S14	CITY OF PAWTUCKET
0011	000	1	SLATER	ST	639	Overhead	Distribution	Luminaire	LUM HPS RWY 100W	Active	100	90435-67003	S14	CITY OF PAWTUCKET
0013	000	1	SLATER	ST	639	Overhead	Distribution	Luminaire	LUM HPS RWY 100W	Active	100	90435-67003	S14	CITY OF PAWTUCKET
0015	000	1	SLATER	ST	639	Overhead	Distribution	Luminaire	LUM HPS RWY 100W	Active	100	90435-67003	S14	CITY OF PAWTUCKET
0009	030	1	SLATER MEMORI	ST	640	Overhead	Distribution	Luminaire	LUM HPS FLD 400W	Active	400	3371-64002	S14	CITY OF PAWTUCKET
0021	000	1	SLATER MEMORI	ST	640	Overhead	Distribution	Luminaire	LUM HPS FLD 250W	Active	250	3371-64002	S14	CITY OF PAWTUCKET
0003	000	1	SLATER PARK	AVE	641	Overhead	Distribution	Luminaire	LUM HPS RWY 70W	Active	70	90435-67003	S14	CITY OF PAWTUCKET
0005	000	1	SLATER PARK	AVE	641	Overhead	Distribution	Luminaire	LUM HPS RWY 70W	Active	70	90435-67003	S14	CITY OF PAWTUCKET
0006	000	1	SLATER PARK	AVE	641	Overhead	Distribution	Luminaire	LUM HPS RWY 70W	Active	70	90435-67003	S14	CITY OF PAWTUCKET
0007	000	1	SLATER PARK	AVE	641	Overhead	Distribution	Luminaire	LUM HPS RWY 70W	Active	70	90435-67003	S14	CITY OF PAWTUCKET
0008	000	1	SLATER PARK	AVE	641	Overhead	Distribution	Luminaire	LUM HPS RWY 70W	Active	70	90435-67003	S14	CITY OF PAWTUCKET
0010	000	1	SLATER PARK	AVE	641	Overhead	Distribution	Luminaire	LUM HPS RWY 70W	Active	70	90435-67003	S14	CITY OF PAWTUCKET
0012	000	1	SLATER PARK	AVE	641	Overhead	Distribution	Luminaire	LUM HPS RWY 70W	Active	70	90435-67003	S14	CITY OF PAWTUCKET
0014	000	1	SLATER PARK	AVE	641	Overhead	Distribution	Luminaire	LUM HPS RWY 50W	Active	50	90435-67003	S14	CITY OF PAWTUCKET
0015	000	1	SLATER PARK	AVE	641	Overhead	Distribution	Luminaire	LUM HPS RWY 70W	Active	70	90435-67003	S14	CITY OF PAWTUCKET
0016	000	1	SLATER PARK	AVE	641	Overhead	Distribution	Luminaire	LUM HPS RWY 100W	Active	100	90435-67003	S14	CITY OF PAWTUCKET
0017	000	1	SLATER PARK	AVE	641	Overhead	Distribution	Luminaire	LUM HPS RWY 70W	Active	70	90435-67003	S14	CITY OF PAWTUCKET
0018	000	1	SLATER PARK	AVE	641	Overhead	Distribution	Luminaire	LUM HPS RWY 70W	Active	70	90435-67003	S14	CITY OF PAWTUCKET
0019	000	1	SLATER PARK	AVE	641	Overhead	Distribution	Luminaire	LUM HPS RWY 70W	Active	70	90435-67003	S14	CITY OF PAWTUCKET
0021	000	1	SLATER PARK	AVE	641	Overhead	Distribution	Luminaire	LUM HPS RWY 100W	Active	100	90435-67003	S14	CITY OF PAWTUCKET
0001	000	1	SMITHFIELD	AVE	642	Overhead	Distribution	Luminaire	LUM HPS RWY 250W	Active	250	90435-67003	S14	CITY OF PAWTUCKET
0002	000	1	SMITHFIELD	AVE	642	Overhead	Distribution	Luminaire	LUM HPS RWY 250W	Active	250	90435-67003	S14	CITY OF PAWTUCKET
0003	000	1	SMITHFIELD	AVE	642	Overhead	Distribution	Luminaire	LUM HPS RWY 250W	Active	250	90435-67003	S14	CITY OF PAWTUCKET
0004	000	1	SMITHFIELD	AVE	642	Overhead	Distribution	Luminaire	LUM HPS RWY 250W	Active	250	90435-67003	S14	CITY OF PAWTUCKET
0004	001	1	SMITHFIELD	AVE	642	Overhead	Distribution	Luminaire	LUM HPS RWY 250W	Active	250	90435-67003	S14	CITY OF PAWTUCKET
0004	002	1	SMITHFIELD	AVE	642	Overhead	Distribution	Luminaire	LUM HPS RWY 250W	Active	250	90435-67003	S14	CITY OF PAWTUCKET
0005	000	1	SMITHFIELD	AVE	642	Overhead	Distribution	Luminaire	LUM HPS RWY 250W	Active	250	90435-67003	S14	CITY OF PAWTUCKET
0006	000	1	SMITHFIELD	AVE	642	Overhead	Distribution	Luminaire	LUM HPS RWY 250W	Active	250	90435-67003	S14	CITY OF PAWTUCKET
0007	084	1	SMITHFIELD	AVE	642	Overhead	Distribution	Luminaire	LUM HPS RWY 250W	Active	250	90435-67003	S14	CITY OF PAWTUCKET
0011	000	1	SMITHFIELD	AVE	642	Overhead	Distribution	Luminaire	LUM HPS RWY 250W	Active	250	90435-67003	S14	CITY OF PAWTUCKET
0012	000	1	SMITHFIELD	AVE	642	Overhead	Distribution	Luminaire	LUM HPS RWY 70W	Active	70	90435-67003	S14	CITY OF PAWTUCKET
0013	000	1	SMITHFIELD	AVE	642	Overhead	Distribution	Luminaire	LUM HPS RWY 70W	Active	70	90435-67003	S14	CITY OF PAWTUCKET
0013	084	1	SMITHFIELD	AVE	642	Overhead	Distribution	Luminaire	LUM HPS RWY 250W	Active	250	90435-67003	S14	CITY OF PAWTUCKET
0015	000	1	SMITHFIELD	AVE	642	Overhead	Distribution	Luminaire	LUM HPS RWY 250W	Active	250	90435-67003	S14	CITY OF PAWTUCKET
0016	000	1	SMITHFIELD	AVE	642	Overhead	Distribution	Luminaire	LUM HPS RWY 250W	Active	250	90435-67003	S14	CITY OF PAWTUCKET
0017	001	1	SMITHFIELD	AVE	642	Overhead	Distribution	Luminaire	LUM HPS RWY 250W	Active	250	90435-67003	S14	CITY OF PAWTUCKET
0018	001	1	SMITHFIELD	AVE	642	Overhead	Distribution	Luminaire	LUM HPS RWY 250W	Active	250	90435-67003	S14	CITY OF PAWTUCKET
0020	000	1	SMITHFIELD	AVE	642	Overhead	Distribution	Luminaire	LUM HPS RWY 250W	Active	250	90435-67003	S14	CITY OF PAWTUCKET
0021	001	1	SMITHFIELD	AVE	642	Overhead	Distribution	Luminaire	LUM HPS RWY 250W	Active	250	90435-67003	S14	CITY OF PAWTUCKET
0022	001	1	SMITHFIELD	AVE	642	Overhead	Distribution	Luminaire	LUM HPS RWY 250W	Active	250	90435-67003	S14	CITY OF PAWTUCKET
0024	000	1	SMITHFIELD	AVE	642	Overhead	Distribution	Luminaire	LUM HPS RWY 250W	Active	250	90435-67003	S14	CITY OF PAWTUCKET
0025	001	1	SMITHFIELD	AVE	642	Overhead	Distribution	Luminaire	LUM HPS RWY 250W	Active	250	90435-67003	S14	CITY OF PAWTUCKET
0026	001	1	SMITHFIELD	AVE	642	Overhead	Distribution	Luminaire	LUM HPS RWY 250W	Active	250	90435-67003	S14	CITY OF PAWTUCKET
0027	000	1	SMITHFIELD	AVE	642	Overhead	Distribution	Luminaire	LUM HPS RWY 250W	Active	250	90435-67003	S14	CITY OF PAWTUCKET

0028	001	1	SMITHFIELD	AVE	642	Overhead	Distribution	Luminaire	LUM HPS RWY 250W	Active	250	90435-67003	S14	CITY OF PAWTUCKET
0030	000	1	SMITHFIELD	AVE	642	Overhead	Distribution	Luminaire	LUM HPS RWY 250W	Active	250	90435-67003	S14	CITY OF PAWTUCKET
0031	001	1	SMITHFIELD	AVE	642	Overhead	Distribution	Luminaire	LUM HPS RWY 250W	Active	250	90435-67003	S14	CITY OF PAWTUCKET
0031	011	1	SMITHFIELD	AVE	642	Overhead	Distribution	Luminaire	LUM HPS FLD 250W	Active	250	90435-67003	S14	CITY OF PAWTUCKET
0032	000	1	SMITHFIELD	AVE	642	Overhead	Distribution	Luminaire	LUM HPS RWY 250W	Active	250	90435-67003	S14	CITY OF PAWTUCKET
0032	011	1	SMITHFIELD	AVE	642	Overhead	Distribution	Luminaire	LUM HPS FLD 400W	Active	400	28129-72000	S14	PAWTUCKET SCHOOL DEP
0032	011	2	SMITHFIELD	AVE	642	Overhead	Distribution	Luminaire	LUM HPS FLD 400W	Active	400	28129-72000	S14	PAWTUCKET SCHOOL DEP
0033	001	1	SMITHFIELD	AVE	642	Overhead	Distribution	Luminaire	LUM HPS RWY 250W	Active	250	90435-67003	S14	CITY OF PAWTUCKET
0034	000	1	SMITHFIELD	AVE	642	Overhead	Distribution	Luminaire	LUM HPS RWY 250W	Active	250	90435-67003	S14	CITY OF PAWTUCKET
0034	001	1	SMITHFIELD	AVE	642	Overhead	Distribution	Luminaire	LUM HPS FLD 400W	Active	400	28129-72000	S14	PAWTUCKET SCHOOL DEP
0034	001	2	SMITHFIELD	AVE	642	Overhead	Distribution	Luminaire	LUM HPS FLD 400W	Active	400	28129-72000	S14	PAWTUCKET SCHOOL DEP
0035	001	1	SMITHFIELD	AVE	642	Overhead	Distribution	Luminaire	LUM HPS RWY 250W	Active	250	90435-67003	S14	CITY OF PAWTUCKET
0038	000	1	SMITHFIELD	AVE	642	Overhead	Distribution	Luminaire	LUM HPS RWY 250W	Active	250	90435-67003	S14	CITY OF PAWTUCKET
0039	001	1	SMITHFIELD	AVE	642	Overhead	Distribution	Luminaire	LUM HPS RWY 250W	Active	250	90435-67003	S14	CITY OF PAWTUCKET
0040	000	1	SMITHFIELD	AVE	642	Overhead	Distribution	Luminaire	LUM HPS RWY 250W	Active	250	90435-67003	S14	CITY OF PAWTUCKET
0042	000	1	SMITHFIELD	AVE	642	Overhead	Distribution	Luminaire	LUM HPS RWY 250W	Active	250	90435-67003	S14	CITY OF PAWTUCKET
0043	001	1	SMITHFIELD	AVE	642	Overhead	Distribution	Luminaire	LUM HPS RWY 250W	Active	250	90435-67003	S14	CITY OF PAWTUCKET
0045	000	1	SMITHFIELD	AVE	642	Overhead	Distribution	Luminaire	LUM HPS RWY 250W	Active	250	90435-67003	S14	CITY OF PAWTUCKET
0046	001	1	SMITHFIELD	AVE	642	Overhead	Distribution	Luminaire	LUM HPS RWY 250W	Active	250	90435-67003	S14	CITY OF PAWTUCKET
0047	000	1	SMITHFIELD	AVE	642	Overhead	Distribution	Luminaire	LUM HPS RWY 250W	Active	250	90435-67003	S14	CITY OF PAWTUCKET
0048	000	1	SMITHFIELD	AVE	642	Overhead	Distribution	Luminaire	LUM HPS RWY 250W	Active	250	90435-67003	S14	CITY OF PAWTUCKET
0050	001	1	SMITHFIELD	AVE	642	Overhead	Distribution	Luminaire	LUM HPS RWY 250W	Active	250	90435-67003	S14	CITY OF PAWTUCKET
0051	000	1	SMITHFIELD	AVE	642	Overhead	Distribution	Luminaire	LUM HPS RWY 250W	Active	250	90435-67003	S14	CITY OF PAWTUCKET
0052	001	1	SMITHFIELD	AVE	642	Overhead	Distribution	Luminaire	LUM HPS RWY 250W	Active	250	90435-67003	S14	CITY OF PAWTUCKET
0054	000	1	SMITHFIELD	AVE	642	Overhead	Distribution	Luminaire	LUM HPS RWY 250W	Active	250	90435-67003	S14	CITY OF PAWTUCKET
0055	000	1	SMITHFIELD	AVE	642	Overhead	Distribution	Luminaire	LUM HPS RWY 250W	Active	250	90435-67003	S14	CITY OF PAWTUCKET
0056	002	1	SMITHFIELD	AVE	642	Overhead	Distribution	Luminaire	LUM HPS RWY 250W	Active	250	90435-67003	S14	CITY OF PAWTUCKET
0058	000	1	SMITHFIELD	AVE	642	Overhead	Distribution	Luminaire	LUM HPS RWY 250W	Active	250	90435-67003	S14	CITY OF PAWTUCKET
0059	001	1	SMITHFIELD	AVE	642	Overhead	Distribution	Luminaire	LUM HPS RWY 250W	Active	250	90435-67003	S14	CITY OF PAWTUCKET
0061	000	1	SMITHFIELD	AVE	642	Overhead	Distribution	Luminaire	LUM HPS RWY 250W	Active	250	90435-67003	S14	CITY OF PAWTUCKET
0062	001	1	SMITHFIELD	AVE	642	Overhead	Distribution	Luminaire	LUM HPS RWY 250W	Active	250	90435-67003	S14	CITY OF PAWTUCKET
0064	000	1	SMITHFIELD	AVE	642	Overhead	Distribution	Luminaire	LUM HPS RWY 250W	Active	250	90435-67003	S14	CITY OF PAWTUCKET
0065	001	1	SMITHFIELD	AVE	642	Overhead	Distribution	Luminaire	LUM HPS RWY 250W	Active	250	90435-67003	S14	CITY OF PAWTUCKET
0067	000	1	SMITHFIELD	AVE	642	Overhead	Distribution	Luminaire	LUM HPS RWY 250W	Active	250	90435-67003	S14	CITY OF PAWTUCKET
0068	001	1	SMITHFIELD	AVE	642	Overhead	Distribution	Luminaire	LUM HPS RWY 250W	Active	250	90435-67003	S14	CITY OF PAWTUCKET
0069	000	1	SMITHFIELD	AVE	642	Overhead	Distribution	Luminaire	LUM HPS RWY 250W	Active	250	90435-67003	S14	CITY OF PAWTUCKET
0070	001	1	SMITHFIELD	AVE	642	Overhead	Distribution	Luminaire	LUM HPS RWY 250W	Active	250	90435-67003	S14	CITY OF PAWTUCKET
0072	000	1	SMITHFIELD	AVE	642	Overhead	Distribution	Luminaire	LUM HPS RWY 250W	Active	250	90435-67003	S14	CITY OF PAWTUCKET
0073	001	1	SMITHFIELD	AVE	642	Overhead	Distribution	Luminaire	LUM HPS RWY 250W	Active	250	90435-67003	S14	CITY OF PAWTUCKET
0075	000	1	SMITHFIELD	AVE	642	Overhead	Distribution	Luminaire	LUM HPS RWY 250W	Active	250	90435-67003	S14	CITY OF PAWTUCKET
0076	001	1	SMITHFIELD	AVE	642	Overhead	Distribution	Luminaire	LUM HPS RWY 250W	Active	250	90435-67003	S14	CITY OF PAWTUCKET
0078	000	1	SMITHFIELD	AVE	642	Overhead	Distribution	Luminaire	LUM HPS RWY 250W	Active	250	90435-67003	S14	CITY OF PAWTUCKET
0079	000	1	SMITHFIELD	AVE	642	Overhead	Distribution	Luminaire	LUM HPS RWY 250W	Active	250	90435-67003	S14	CITY OF PAWTUCKET
0079	001	1	SMITHFIELD	AVE	642	Overhead	Distribution	Luminaire	LUM HPS RWY 250W	Active	250	90435-67003	S14	CITY OF PAWTUCKET
0081	000	1	SMITHFIELD	AVE	642	Overhead	Distribution	Luminaire	LUM HPS RWY 250W	Active	250	90435-67003	S14	CITY OF PAWTUCKET
0002	000	1	SOUTH	ST	644	Overhead	Distribution	Luminaire	LUM HPS RWY 70W	Active	70	90435-67003	S14	CITY OF PAWTUCKET
0004	000	1	SOUTH	ST	644	Overhead	Distribution	Luminaire	LUM HPS RWY 70W	Active	70	90435-67003	S14	CITY OF PAWTUCKET
0006	000	1	SOUTH	ST	644	Overhead	Distribution	Luminaire	LUM HPS RWY 70W	Active	70	90435-67003	S14	CITY OF PAWTUCKET
0008	000	1	SOUTH	ST	644	Overhead	Distribution	Luminaire	LUM HPS RWY 70W	Active	70	90435-67003	S14	CITY OF PAWTUCKET
0002	000	1	SOUTH BEND	ST	645	Overhead	Distribution	Luminaire	LUM HPS RWY 100W	Active	100	90435-67003	S14	CITY OF PAWTUCKET
0004	000	1	SOUTH BEND	ST	645	Overhead	Distribution	Luminaire	LUM HPS RWY 100W	Active	100	90435-67003	S14	CITY OF PAWTUCKET
0006	000	1	SOUTH BEND	ST	645	Overhead	Distribution	Luminaire	LUM HPS RWY 100W	Active	100	90435-67003	S14	CITY OF PAWTUCKET
0006	030	1	SOUTH BEND	ST	645	Overhead	Distribution	Luminaire	LUM HPS FLD 400W	Active	400	28129-71003	S14	PAWTUCKET SCH DEPT
0006	031	1	SOUTH BEND	ST	645	Overhead	Distribution	Luminaire	LUM HPS FLD 250W	Active	250	28129-71003	S14	PAWTUCKET SCH DEPT
0006	032	1	SOUTH BEND	ST	645	Overhead	Distribution	Luminaire	LUM HPS FLD 250W	Active	250	40585-11009	S14	PAWTUCKET SCHOOL DEP
0006	033	1	SOUTH BEND	ST	645	Overhead	Distribution	Luminaire	LUM HPS FLD 250W	Active	250	40585-11009	S14	PAWTUCKET SCHOOL DEP
0008	000	1	SOUTH BEND	ST	645	Overhead	Distribution	Luminaire	LUM HPS FLD 400W	Active	400	40585-11009	S14	PAWTUCKET SCHOOL DEP
0008	000	2	SOUTH BEND	ST	645	Overhead	Distribution	Luminaire	LUM HPS RWY 100W	Active	100	90435-67003	S14	CITY OF PAWTUCKET
0010	000	1	SOUTH BEND	ST	645	Overhead	Distribution	Luminaire	LUM HPS RWY 100W	Active	100	90435-67003	S14	CITY OF PAWTUCKET
0010	030	1	SOUTH BEND	ST	645	Overhead	Distribution	Luminaire	LUM HPS FLD 400W	Active	400	40585-11009	S14	PAWTUCKET SCHOOL DEP
0010	031	1	SOUTH BEND	ST	645	Overhead	Distribution	Luminaire	LUM HPS FLD 400W	Active	400	40585-11009	S14	PAWTUCKET SCHOOL DEP
0010	031	2	SOUTH BEND	ST	645	Overhead	Distribution	Luminaire	LUM HPS FLD 400W	Active	400	40585-11009	S14	PAWTUCKET SCHOOL DEP
0010	032	1	SOUTH BEND	ST	645	Overhead	Distribution	Luminaire	LUM HPS FLD 250W	Active	250	28129-71003	S14	PAWTUCKET SCH DEPT

0010	032	2	SOUTH BEND	ST	645	Overhead	Distribution	Luminaire	LUM HPS FLD 400W	Active	400	28129-71003	S14	PAWTUCKET SCH DEPT
0011	000	1	SOUTH BEND	ST	645	Overhead	Distribution	Luminaire	LUM HPS RWY 100W	Active	100	90435-67003	S14	CITY OF PAWTUCKET
0014	000	1	SOUTH BEND	ST	645	Overhead	Distribution	Luminaire	LUM HPS RWY 100W	Active	100	90435-67003	S14	CITY OF PAWTUCKET
0015	000	1	SOUTH BEND	ST	645	Overhead	Distribution	Luminaire	LUM HPS RWY 100W	Active	100	90435-67003	S14	CITY OF PAWTUCKET
0016	000	1	SOUTH BEND	ST	645	Overhead	Distribution	Luminaire	LUM HPS RWY 100W	Active	100	90435-67003	S14	CITY OF PAWTUCKET
0019	000	1	SOUTH BEND	ST	645	Overhead	Distribution	Luminaire	LUM HPS RWY 100W	Active	100	90435-67003	S14	CITY OF PAWTUCKET
0020	000	1	SOUTH BEND	ST	645	Overhead	Distribution	Luminaire	LUM HPS RWY 100W	Active	100	90435-67003	S14	CITY OF PAWTUCKET
0021	000	1	SOUTH BEND	ST	645	Overhead	Distribution	Luminaire	LUM HPS RWY 250W	Active	250	90435-67003	S14	CITY OF PAWTUCKET
0023	000	1	SOUTH BEND	ST	645	Overhead	Distribution	Luminaire	LUM HPS RWY 250W	Active	250	90435-67003	S14	CITY OF PAWTUCKET
0001	000	1	SPENCER	ST	647	Overhead	Distribution	Luminaire	LUM HPS RWY 70W	Active	70	90435-67003	S14	CITY OF PAWTUCKET
0003	000	1	SPENCER	ST	647	Overhead	Distribution	Luminaire	LUM HPS RWY 70W	Active	70	90435-67003	S14	CITY OF PAWTUCKET
0011	000	1	SPRING	ST	649	Overhead	Distribution	Luminaire	LUM HPS RWY 100W	Active	100	90435-67003	S14	CITY OF PAWTUCKET
0012	000	1	SPRING	ST	649	Overhead	Distribution	Luminaire	LUM HPS RWY 70W	Active	70	90435-67003	S14	CITY OF PAWTUCKET
0013	000	1	SPRING	ST	649	Overhead	Distribution	Luminaire	LUM HPS RWY 70W	Active	70	90435-67003	S14	CITY OF PAWTUCKET
0005	000	1	ST MARIA	WAY	317	Overhead	Distribution	Luminaire	LUM HPS RWY 70W	Active	70	90435-67003	S14	CITY OF PAWTUCKET
0005	000	2	ST MARIA	WAY	317	Overhead	Distribution	Luminaire	LUM HPS FLD 400W	Active	400	90435-67003	S14	CITY OF PAWTUCKET
0006	000	1	ST MARIA	WAY	317	Overhead	Distribution	Luminaire	LUM HPS RWY 70W	Active	70	90435-67003	S14	CITY OF PAWTUCKET
0008	000	1	ST MARIA	WAY	317	Overhead	Distribution	Luminaire	LUM HPS RWY 70W	Active	70	90435-67003	S14	CITY OF PAWTUCKET
0002	000	1	STAFFORD	ST	650	Overhead	Distribution	Luminaire	LUM HPS RWY 70W	Active	70	90435-67003	S14	CITY OF PAWTUCKET
0006	000	1	STAFFORD	ST	650	Overhead	Distribution	Luminaire	LUM HPS RWY 70W	Active	70	90435-67003	S14	CITY OF PAWTUCKET
0002	000	1	STANLEY	ST	651	Overhead	Distribution	Luminaire	LUM HPS RWY 70W	Active	70	90435-67003	S14	CITY OF PAWTUCKET
0004	000	1	STANLEY	ST	651	Overhead	Distribution	Luminaire	LUM HPS RWY 70W	Active	70	90435-67003	S14	CITY OF PAWTUCKET
0002	000	1	STAR	ST	652	Overhead	Distribution	Luminaire	LUM HPS RWY 70W	Active	70	90435-67003	S14	CITY OF PAWTUCKET
0003	000	1	STAR	ST	652	Overhead	Distribution	Luminaire	LUM HPS RWY 70W	Active	70	90435-67003	S14	CITY OF PAWTUCKET
0005	000	1	STAR	ST	652	Overhead	Distribution	Luminaire	LUM HPS RWY 70W	Active	70	90435-67003	S14	CITY OF PAWTUCKET
0007	000	1	STAR	ST	652	Overhead	Distribution	Luminaire	LUM HPS RWY 70W	Active	70	90435-67003	S14	CITY OF PAWTUCKET
0009	000	1	STAR	ST	652	Overhead	Distribution	Luminaire	LUM HPS RWY 70W	Active	70	90435-67003	S14	CITY OF PAWTUCKET
0003	000	1	STATE	ST	653	Overhead	Distribution	Luminaire	LUM HPS RWY 70W	Active	70	90435-67003	S14	CITY OF PAWTUCKET
0002	000	1	STEARNS	ST	654	Overhead	Distribution	Luminaire	LUM HPS RWY 70W	Active	70	90435-67003	S14	CITY OF PAWTUCKET
0003	000	1	STEARNS	ST	654	Overhead	Distribution	Luminaire	LUM HPS RWY 70W	Active	70	90435-67003	S14	CITY OF PAWTUCKET
0005	000	1	STEARNS	ST	654	Overhead	Distribution	Luminaire	LUM HPS RWY 70W	Active	70	90435-67003	S14	CITY OF PAWTUCKET
0007	000	1	STEARNS	ST	654	Overhead	Distribution	Luminaire	LUM HPS RWY 70W	Active	70	90435-67003	S14	CITY OF PAWTUCKET
0010	000	1	STEARNS	ST	654	Overhead	Distribution	Luminaire	LUM HPS RWY 70W	Active	70	90435-67003	S14	CITY OF PAWTUCKET
0013	000	1	STEARNS	ST	654	Overhead	Distribution	Luminaire	LUM HPS RWY 70W	Active	70	90435-67003	S14	CITY OF PAWTUCKET
0015	000	1	STEARNS	ST	654	Overhead	Distribution	Luminaire	LUM HPS RWY 70W	Active	70	90435-67003	S14	CITY OF PAWTUCKET
0017	000	1	STEARNS	ST	654	Overhead	Distribution	Luminaire	LUM HPS RWY 70W	Active	70	90435-67003	S14	CITY OF PAWTUCKET
0019	000	1	STEARNS	ST	654	Overhead	Distribution	Luminaire	LUM HPS RWY 100W	Active	100	90435-67003	S14	CITY OF PAWTUCKET
0001	000	1	STEDMAN	AVE	655	Overhead	Distribution	Luminaire	LUM HPS RWY 70W	Active	70	90435-67003	S14	CITY OF PAWTUCKET
0003	000	1	STEDMAN	AVE	655	Overhead	Distribution	Luminaire	LUM HPS RWY 70W	Active	70	90435-67003	S14	CITY OF PAWTUCKET
0005	000	1	STEDMAN	AVE	655	Overhead	Distribution	Luminaire	LUM HPS RWY 70W	Active	70	90435-67003	S14	CITY OF PAWTUCKET
0007	000	1	STEDMAN	AVE	655	Overhead	Distribution	Luminaire	LUM HPS RWY 70W	Active	70	90435-67003	S14	CITY OF PAWTUCKET
0011	000	1	STEDMAN	AVE	655	Overhead	Distribution	Luminaire	LUM HPS RWY 70W	Active	70	90435-67003	S14	CITY OF PAWTUCKET
0003	000	1	STEPHANIE	DR	656	Overhead	Distribution	Luminaire	LUM HPS RWY 70W	Active	70	90435-67003	S14	CITY OF PAWTUCKET
0005	000	1	STEPHANIE	DR	656	Overhead	Distribution	Luminaire	LUM HPS RWY 70W	Active	70	90435-67003	S14	CITY OF PAWTUCKET
0007	000	1	STEPHANIE	DR	656	Overhead	Distribution	Luminaire	LUM HPS RWY 70W	Active	70	90435-67003	S14	CITY OF PAWTUCKET
0008	000	1	STEPHANIE	DR	656	Overhead	Distribution	Luminaire	LUM HPS RWY 70W	Active	70	90435-67003	S14	CITY OF PAWTUCKET
0009	000	1	STEPHANIE	DR	656	Overhead	Distribution	Luminaire	LUM HPS RWY 70W	Active	70	90435-67003	S14	CITY OF PAWTUCKET
0003	000	1	STERLING	ST	657	Overhead	Distribution	Luminaire	LUM HPS RWY 70W	Active	70	90435-67003	S14	CITY OF PAWTUCKET
0005	000	1	STERLING	ST	657	Overhead	Distribution	Luminaire	LUM HPS RWY 70W	Active	70	90435-67003	S14	CITY OF PAWTUCKET
0007	000	1	STERLING	ST	657	Overhead	Distribution	Luminaire	LUM HPS RWY 70W	Active	70	90435-67003	S14	CITY OF PAWTUCKET
0009	000	1	STERLING	ST	657	Overhead	Distribution	Luminaire	LUM HPS RWY 70W	Active	70	90435-67003	S14	CITY OF PAWTUCKET
0010	000	1	STERLING	ST	657	Overhead	Distribution	Luminaire	LUM HPS RWY 70W	Active	70	90435-67003	S14	CITY OF PAWTUCKET
0001	000	1	STERRY	ST	658	Overhead	Distribution	Luminaire	LUM HPS RWY 100W	Active	100	90435-67003	S14	CITY OF PAWTUCKET
0003	000	1	STERRY	ST	658	Overhead	Distribution	Luminaire	LUM HPS RWY 70W	Active	70	90435-67003	S14	CITY OF PAWTUCKET
0006	000	1	STERRY	ST	658	Overhead	Distribution	Luminaire	LUM HPS RWY 100W	Active	100	90435-67003	S14	CITY OF PAWTUCKET
0008	000	1	STERRY	ST	658	Overhead	Distribution	Luminaire	LUM HPS RWY 100W	Active	100	90435-67003	S14	CITY OF PAWTUCKET
0009	000	1	STERRY	ST	658	Overhead	Distribution	Luminaire	LUM HPS RWY 70W	Active	70	90435-67003	S14	CITY OF PAWTUCKET
0011	000	1	STERRY	ST	658	Overhead	Distribution	Luminaire	LUM HPS RWY 70W	Active	70	90435-67003	S14	CITY OF PAWTUCKET
0012	000	1	STERRY	ST	658	Overhead	Distribution	Luminaire	LUM HPS RWY 70W	Active	70	90435-67003	S14	CITY OF PAWTUCKET
0016	000	1	STERRY	ST	658	Overhead	Distribution	Luminaire	LUM HPS RWY 70W	Active	70	90435-67003	S14	CITY OF PAWTUCKET
0018	000	1	STERRY	ST	658	Overhead	Distribution	Luminaire	LUM HPS FLD 250W	Active	250	15698-26009	S14	PAWTUCKET SCHOOL DEP
0018	000	2	STERRY	ST	658	Overhead	Distribution	Luminaire	LUM HPS RWY 70W	Active	70	90435-67003	S14	CITY OF PAWTUCKET
0018	000	3	STERRY	ST	658	Overhead	Distribution	Luminaire	LUM HPS FLD 250W	Active	250	90435-67003	S14	CITY OF PAWTUCKET

0022	000	1	STERRY	ST	658	Overhead	Distribution	Luminaire	LUM HPS RWY 100W	Active	100	90435-67003	S14	CITY OF PAWTUCKET
0024	000	1	STERRY	ST	658	Overhead	Distribution	Luminaire	LUM HPS RWY 70W	Active	70	90435-67003	S14	CITY OF PAWTUCKET
0001	000	1	STUART	ST	659	Overhead	Distribution	Luminaire	LUM HPS RWY 70W	Active	70	90435-67003	S14	CITY OF PAWTUCKET
0002	000	1	STUART	ST	659	Overhead	Distribution	Luminaire	LUM HPS RWY 70W	Active	70	90435-67003	S14	CITY OF PAWTUCKET
0002	000	1	STURMAN	ST	752	Overhead	Distribution	Luminaire	LUM HPS RWY 70W	Active	70	90435-67003	S14	CITY OF PAWTUCKET
0002	000	1	SUFFOLK	AVE	660	Overhead	Distribution	Luminaire	LUM HPS RWY 70W	Active	70	90435-67003	S14	CITY OF PAWTUCKET
0004	000	1	SUFFOLK	AVE	660	Overhead	Distribution	Luminaire	LUM HPS RWY 70W	Active	70	90435-67003	S14	CITY OF PAWTUCKET
0007	000	1	SUFFOLK	AVE	660	Overhead	Distribution	Luminaire	LUM HPS RWY 70W	Active	70	90435-67003	S14	CITY OF PAWTUCKET
0009	000	1	SUFFOLK	AVE	660	Overhead	Distribution	Luminaire	LUM HPS RWY 70W	Active	70	90435-67003	S14	CITY OF PAWTUCKET
0011	000	1	SUFFOLK	AVE	660	Overhead	Distribution	Luminaire	LUM HPS RWY 70W	Active	70	90435-67003	S14	CITY OF PAWTUCKET
0013	000	1	SUFFOLK	AVE	660	Overhead	Distribution	Luminaire	LUM HPS RWY 70W	Active	70	90435-67003	S14	CITY OF PAWTUCKET
0014	000	1	SUFFOLK	AVE	660	Overhead	Distribution	Luminaire	LUM HPS RWY 70W	Active	70	90435-67003	S14	CITY OF PAWTUCKET
0016	000	1	SUFFOLK	AVE	660	Overhead	Distribution	Luminaire	LUM HPS RWY 70W	Active	70	90435-67003	S14	CITY OF PAWTUCKET
0018	000	1	SUFFOLK	AVE	660	Overhead	Distribution	Luminaire	LUM HPS RWY 70W	Active	70	90435-67003	S14	CITY OF PAWTUCKET
0020	000	1	SUFFOLK	AVE	660	Overhead	Distribution	Luminaire	LUM HPS RWY 70W	Active	70	90435-67003	S14	CITY OF PAWTUCKET
0022	000	1	SUFFOLK	AVE	660	Overhead	Distribution	Luminaire	LUM HPS RWY 70W	Active	70	90435-67003	S14	CITY OF PAWTUCKET
0023	000	1	SUFFOLK	AVE	660	Overhead	Distribution	Luminaire	LUM HPS RWY 70W	Active	70	90435-67003	S14	CITY OF PAWTUCKET
0001	000	0	SUMMER	ST	661	Underground	Streetlighting	Pole	POLE METAL =>25FT	Active	0	90435-67003	S14	CITY OF PAWTUCKET
0001	000	1	SUMMER	ST	661	Underground	Streetlighting	Luminaire	LUM HPS RWY 250W	Active	250	90435-67003	S14	CITY OF PAWTUCKET
0001	000	2	SUMMER	ST	661	Underground	Streetlighting	Luminaire	LUM HPS FLD 250W	Active	250	90435-67003	S14	CITY OF PAWTUCKET
0002	000	1	SUMMER	ST	661	Overhead	Distribution	Luminaire	LUM HPS FLD 250W	Active	250	90435-67003	S14	CITY OF PAWTUCKET
0002	000	2	SUMMER	ST	661	Overhead	Distribution	Luminaire	LUM HPS RWY 100W	Active	100	90435-67003	S14	CITY OF PAWTUCKET
0003	000	1	SUMMER	ST	661	Overhead	Distribution	Luminaire	LUM HPS RWY 100W	Active	100	90435-67003	S14	CITY OF PAWTUCKET
0004	000	1	SUMMER	ST	661	Overhead	Distribution	Luminaire	LUM HPS RWY 100W	Active	100	90435-67003	S14	CITY OF PAWTUCKET
0004	000	2	SUMMER	ST	661	Overhead	Distribution	Luminaire	LUM HPS FLD 250W	Active	250	90435-67003	S14	CITY OF PAWTUCKET
0005	000	1	SUMMER	ST	661	Overhead	Distribution	Luminaire	LUM HPS RWY 100W	Active	100	90435-67003	S14	CITY OF PAWTUCKET
0006	000	1	SUMMER	ST	661	Overhead	Distribution	Luminaire	LUM HPS RWY 100W	Active	100	90435-67003	S14	CITY OF PAWTUCKET
0007	000	1	SUMMER	ST	661	Overhead	Distribution	Luminaire	LUM HPS RWY 100W	Active	100	90435-67003	S14	CITY OF PAWTUCKET
0007	030	1	SUMMER	ST	661	Overhead	Distribution	Luminaire	LUM HPS RWY 250W	Active	250	90435-67003	S14	CITY OF PAWTUCKET
0007	000	1	SUMMIT	ST	662	Overhead	Distribution	Luminaire	LUM HPS RWY 100W	Active	100	90435-67003	S14	CITY OF PAWTUCKET
0008	000	1	SUMMIT	ST	662	Overhead	Distribution	Luminaire	LUM HPS RWY 100W	Active	100	90435-67003	S14	CITY OF PAWTUCKET
0009	000	1	SUMMIT	ST	662	Overhead	Distribution	Luminaire	LUM HPS RWY 70W	Active	70	90435-67003	S14	CITY OF PAWTUCKET
0010	000	1	SUMMIT	ST	662	Overhead	Distribution	Luminaire	LUM HPS RWY 100W	Active	100	90435-67003	S14	CITY OF PAWTUCKET
0011	000	1	SUMMIT	ST	662	Overhead	Distribution	Luminaire	LUM HPS RWY 100W	Active	100	90435-67003	S14	CITY OF PAWTUCKET
0012	000	1	SUMMIT	ST	662	Overhead	Distribution	Luminaire	LUM HPS RWY 100W	Active	100	90435-67003	S14	CITY OF PAWTUCKET
0013	000	1	SUMMIT	ST	662	Overhead	Distribution	Luminaire	LUM HPS RWY 100W	Active	100	90435-67003	S14	CITY OF PAWTUCKET
0015	000	1	SUMMIT	ST	662	Overhead	Distribution	Luminaire	LUM HPS RWY 100W	Active	100	90435-67003	S14	CITY OF PAWTUCKET
0017	000	1	SUMMIT	ST	662	Overhead	Distribution	Luminaire	LUM HPS RWY 100W	Active	100	90435-67003	S14	CITY OF PAWTUCKET
0018	000	1	SUMMIT	ST	662	Overhead	Distribution	Luminaire	LUM HPS RWY 100W	Active	100	90435-67003	S14	CITY OF PAWTUCKET
0020	000	1	SUMMIT	ST	662	Overhead	Distribution	Luminaire	LUM HPS RWY 100W	Active	100	90435-67003	S14	CITY OF PAWTUCKET
0021	000	1	SUMMIT	ST	662	Overhead	Distribution	Luminaire	LUM HPS RWY 100W	Active	100	90435-67003	S14	CITY OF PAWTUCKET
0022	000	1	SUMMIT	ST	662	Overhead	Distribution	Luminaire	LUM HPS RWY 100W	Active	100	90435-67003	S14	CITY OF PAWTUCKET
0024	000	1	SUMMIT	ST	662	Overhead	Distribution	Luminaire	LUM HPS RWY 100W	Active	100	90435-67003	S14	CITY OF PAWTUCKET
0025	000	1	SUMMIT	ST	662	Overhead	Distribution	Luminaire	LUM HPS RWY 100W	Active	100	90435-67003	S14	CITY OF PAWTUCKET
0001	000	1	SUMNER	ST	663	Overhead	Distribution	Luminaire	LUM HPS RWY 70W	Active	70	90435-67003	S14	CITY OF PAWTUCKET
0003	000	1	SUMNER	ST	663	Overhead	Distribution	Luminaire	LUM HPS RWY 70W	Active	70	90435-67003	S14	CITY OF PAWTUCKET
0005	000	1	SUMNER	ST	663	Overhead	Distribution	Luminaire	LUM HPS RWY 70W	Active	70	90435-67003	S14	CITY OF PAWTUCKET
0007	000	1	SUMNER	ST	663	Overhead	Distribution	Luminaire	LUM HPS RWY 70W	Active	70	90435-67003	S14	CITY OF PAWTUCKET
0002	000	1	SWAN	ST	664	Overhead	Distribution	Luminaire	LUM HPS RWY 70W	Active	70	90435-67003	S14	CITY OF PAWTUCKET
0003	000	1	SWAN	ST	664	Overhead	Distribution	Luminaire	LUM HPS RWY 70W	Active	70	90435-67003	S14	CITY OF PAWTUCKET
0004	000	1	SWAN	ST	664	Overhead	Distribution	Luminaire	LUM HPS RWY 70W	Active	70	90435-67003	S14	CITY OF PAWTUCKET
0001	001	1	SWEET	AVE	665	Overhead	Distribution	Luminaire	LUM HPS RWY 70W	Active	70	90435-67003	S14	CITY OF PAWTUCKET
0003	000	1	SWEET	AVE	665	Overhead	Distribution	Luminaire	LUM HPS RWY 70W	Active	70	90435-67003	S14	CITY OF PAWTUCKET
0005	000	1	SWEET	AVE	665	Overhead	Distribution	Luminaire	LUM HPS RWY 70W	Active	70	90435-67003	S14	CITY OF PAWTUCKET
0007	000	1	SWEET	AVE	665	Overhead	Distribution	Luminaire	LUM HPS RWY 70W	Active	70	90435-67003	S14	CITY OF PAWTUCKET
0010	000	1	SWEET	AVE	665	Overhead	Distribution	Luminaire	LUM HPS RWY 70W	Active	70	90435-67003	S14	CITY OF PAWTUCKET
0012	000	1	SWEET	AVE	665	Overhead	Distribution	Luminaire	LUM HPS RWY 70W	Active	70	90435-67003	S14	CITY OF PAWTUCKET
0014	000	1	SWEET	AVE	665	Overhead	Distribution	Luminaire	LUM HPS RWY 70W	Active	70	90435-67003	S14	CITY OF PAWTUCKET
0015	000	1	SWEET	AVE	665	Overhead	Distribution	Luminaire	LUM HPS RWY 70W	Active	70	90435-67003	S14	CITY OF PAWTUCKET
0017	000	1	SWEET	AVE	665	Overhead	Distribution	Luminaire	LUM HPS RWY 70W	Active	70	90435-67003	S14	CITY OF PAWTUCKET
0018	000	1	SWEET	AVE	665	Overhead	Distribution	Luminaire	LUM HPS RWY 70W	Active	70	90435-67003	S14	CITY OF PAWTUCKET
0001	000	0	TAFT	ST	666	Underground	Streetlighting	Pole	POLE METAL =>25FT	Active	0	90435-67003	S14	CITY OF PAWTUCKET
0001	000	1	TAFT	ST	666	Underground	Streetlighting	Luminaire	LUM HPS RWY 100W-TW	Active	100	90435-67003	S14	CITY OF PAWTUCKET

0002	000	0	TAFT	ST	666	Underground	Streetlighting	Pole	POLE METAL =>25FT	Active	0	90435-67003	S14	CITY OF PAWTUCKET
0002	000	1	TAFT	ST	666	Underground	Streetlighting	Luminaire	LUM HPS RWY 100W	Active	100	90435-67003	S14	CITY OF PAWTUCKET
0003	000	0	TAFT	ST	666	Underground	Streetlighting	Pole	POLE METAL =>25FT	Active	0	90435-67003	S14	CITY OF PAWTUCKET
0003	000	1	TAFT	ST	666	Underground	Streetlighting	Luminaire	LUM HPS RWY 100W	Active	100	90435-67003	S14	CITY OF PAWTUCKET
0004	000	0	TAFT	ST	666	Underground	Streetlighting	Pole	POLE METAL =>25FT	Active	0	90435-67003	S14	CITY OF PAWTUCKET
0004	000	1	TAFT	ST	666	Underground	Streetlighting	Luminaire	LUM HPS RWY 100W	Active	100	90435-67003	S14	CITY OF PAWTUCKET
0005	000	0	TAFT	ST	666	Underground	Streetlighting	Pole	POLE METAL =>25FT	Active	0	90435-67003	S14	CITY OF PAWTUCKET
0005	000	1	TAFT	ST	666	Underground	Streetlighting	Luminaire	LUM HPS RWY 100W	Active	100	90435-67003	S14	CITY OF PAWTUCKET
0006	000	1	TAFT	ST	666	Overhead	Distribution	Luminaire	LUM HPS RWY 100W	Active	100	90435-67003	S14	CITY OF PAWTUCKET
0007	000	1	TAFT	ST	666	Overhead	Distribution	Luminaire	LUM HPS RWY 100W	Active	100	90435-67003	S14	CITY OF PAWTUCKET
0008	000	0	TAFT	ST	666	Underground	Streetlighting	Pole	POLE METAL =>25FT	Active	0	90435-67003	S14	CITY OF PAWTUCKET
0008	000	1	TAFT	ST	666	Underground	Streetlighting	Luminaire	LUM HPS RWY 100W	Active	100	90435-67003	S14	CITY OF PAWTUCKET
0009	000	1	TAFT	ST	666	Overhead	Distribution	Luminaire	LUM HPS RWY 100W	Active	100	90435-67003	S14	CITY OF PAWTUCKET
0011	000	1	TAFT	ST	666	Overhead	Distribution	Luminaire	LUM HPS RWY 70W	Active	70	90435-67003	S14	CITY OF PAWTUCKET
0012	000	1	TAFT	ST	666	Overhead	Distribution	Luminaire	LUM HPS RWY 70W	Active	70	90435-67003	S14	CITY OF PAWTUCKET
0014	000	1	TAFT	ST	666	Overhead	Distribution	Luminaire	LUM HPS RWY 100W	Active	100	90435-67003	S14	CITY OF PAWTUCKET
0017	000	1	TAFT	ST	666	Overhead	Distribution	Luminaire	LUM HPS RWY 70W	Active	70	90435-67003	S14	CITY OF PAWTUCKET
0022	000	1	TAFT	ST	666	Overhead	Distribution	Luminaire	LUM HPS RWY 70W	Active	70	90435-67003	S14	CITY OF PAWTUCKET
0022	084	1	TAFT	ST	666	Overhead	Distribution	Luminaire	LUM HPS RWY 50W	Active	50	90435-67003	S14	CITY OF PAWTUCKET
0025	000	1	TAFT	ST	666	Overhead	Distribution	Luminaire	LUM HPS RWY 70W	Active	70	90435-67003	S14	CITY OF PAWTUCKET
0027	000	1	TAFT	ST	666	Overhead	Distribution	Luminaire	LUM HPS RWY 100W	Active	100	90435-67003	S14	CITY OF PAWTUCKET
0029	000	1	TAFT	ST	666	Overhead	Distribution	Luminaire	LUM HPS RWY 70W	Active	70	90435-67003	S14	CITY OF PAWTUCKET
0030	000	1	TAFT	ST	666	Overhead	Distribution	Luminaire	LUM HPS RWY 70W	Active	70	90435-67003	S14	CITY OF PAWTUCKET
0035	000	1	TAFT	ST	666	Overhead	Distribution	Luminaire	LUM HPS RWY 70W	Active	70	90435-67003	S14	CITY OF PAWTUCKET
0036	000	1	TAFT	ST	666	Overhead	Distribution	Luminaire	LUM HPS RWY 70W	Active	70	90435-67003	S14	CITY OF PAWTUCKET
0038	000	1	TAFT	ST	666	Overhead	Distribution	Luminaire	LUM HPS RWY 70W	Active	70	90435-67003	S14	CITY OF PAWTUCKET
0001	000	1	TALCOTT	AVE	667	Overhead	Distribution	Luminaire	LUM HPS RWY 100W	Active	100	90435-67003	S14	CITY OF PAWTUCKET
0001	001	1	TALCOTT	AVE	667	Overhead	Distribution	Luminaire	LUM HPS RWY 100W	Active	100	90435-67003	S14	CITY OF PAWTUCKET
0002	000	1	TALCOTT	AVE	667	Overhead	Distribution	Luminaire	LUM HPS RWY 100W	Active	100	90435-67003	S14	CITY OF PAWTUCKET
0003	000	1	TALCOTT	AVE	667	Overhead	Distribution	Luminaire	LUM HPS RWY 100W	Active	100	90435-67003	S14	CITY OF PAWTUCKET
0005	000	1	TALCOTT	AVE	667	Overhead	Distribution	Luminaire	LUM HPS RWY 100W	Active	100	90435-67003	S14	CITY OF PAWTUCKET
0007	000	1	TALCOTT	AVE	667	Overhead	Distribution	Luminaire	LUM HPS RWY 250W	Active	250	90435-67003	S14	CITY OF PAWTUCKET
0003	000	1	TALLY	ST	668	Overhead	Distribution	Luminaire	LUM HPS RWY 70W	Active	70	90435-67003	S14	CITY OF PAWTUCKET
0007	000	1	TALLY	ST	668	Overhead	Distribution	Luminaire	LUM HPS RWY 70W	Active	70	90435-67003	S14	CITY OF PAWTUCKET
0007	001	1	TALLY	ST	668	Overhead	Distribution	Luminaire	LUM HPS FLD 250W	Active	250	77966-82004	S14	PAWTUCKET SCHOOL
0002	000	1	TASHMOO	WAY	669	Overhead	Distribution	Luminaire	LUM HPS RWY 70W	Active	70	90435-67003	S14	CITY OF PAWTUCKET
0003	000	1	TASHMOO	WAY	669	Overhead	Distribution	Luminaire	LUM HPS RWY 70W	Active	70	90435-67003	S14	CITY OF PAWTUCKET
0005	000	1	TASHMOO	WAY	669	Overhead	Distribution	Luminaire	LUM HPS RWY 100W	Active	100	90435-67003	S14	CITY OF PAWTUCKET
0001	000	1	TERRACE	AVE	670	Overhead	Distribution	Luminaire	LUM HPS RWY 70W	Active	70	90435-67003	S14	CITY OF PAWTUCKET
0003	000	1	TERRACE	AVE	670	Overhead	Distribution	Luminaire	LUM HPS RWY 70W	Active	70	90435-67003	S14	CITY OF PAWTUCKET
0008	000	1	TERRACE	AVE	670	Overhead	Distribution	Luminaire	LUM HPS RWY 70W	Active	70	90435-67003	S14	CITY OF PAWTUCKET
0010	000	1	TERRACE	AVE	670	Overhead	Distribution	Luminaire	LUM HPS RWY 70W	Active	70	90435-67003	S14	CITY OF PAWTUCKET
0011	000	1	TERRACE	AVE	670	Overhead	Distribution	Luminaire	LUM HPS RWY 70W	Active	70	90435-67003	S14	CITY OF PAWTUCKET
0013	000	1	TERRACE	AVE	670	Overhead	Distribution	Luminaire	LUM HPS RWY 70W	Active	70	90435-67003	S14	CITY OF PAWTUCKET
0014	000	1	TERRACE	AVE	670	Overhead	Distribution	Luminaire	LUM HPS RWY 70W	Active	70	90435-67003	S14	CITY OF PAWTUCKET
0015	000	1	TERRACE	AVE	670	Overhead	Distribution	Luminaire	LUM HPS RWY 70W	Active	70	90435-67003	S14	CITY OF PAWTUCKET
0014	000	1	THOMAS	AVE	672	Overhead	Distribution	Luminaire	LUM HPS RWY 70W	Active	70	90435-67003	S14	CITY OF PAWTUCKET
0016	000	1	THOMAS	AVE	672	Overhead	Distribution	Luminaire	LUM HPS RWY 70W	Active	70	90435-67003	S14	CITY OF PAWTUCKET
0017	000	1	THOMAS	AVE	672	Overhead	Distribution	Luminaire	LUM HPS RWY 70W	Active	70	90435-67003	S14	CITY OF PAWTUCKET
0018	000	1	THOMAS	AVE	672	Overhead	Distribution	Luminaire	LUM HPS RWY 70W	Active	70	90435-67003	S14	CITY OF PAWTUCKET
0020	000	1	THOMAS	AVE	672	Overhead	Distribution	Luminaire	LUM HPS RWY 70W	Active	70	90435-67003	S14	CITY OF PAWTUCKET
0022	000	1	THOMAS	AVE	672	Overhead	Distribution	Luminaire	LUM HPS RWY 70W	Active	70	90435-67003	S14	CITY OF PAWTUCKET
0024	000	1	THOMAS	AVE	672	Overhead	Distribution	Luminaire	LUM HPS RWY 70W	Active	70	90435-67003	S14	CITY OF PAWTUCKET
0005	000	1	THORNLEY	ST	673	Overhead	Distribution	Luminaire	LUM HPS RWY 70W	Active	70	90435-67003	S14	CITY OF PAWTUCKET
0007	000	1	THORNLEY	ST	673	Overhead	Distribution	Luminaire	LUM HPS RWY 70W	Active	70	90435-67003	S14	CITY OF PAWTUCKET
0006	000	1	THORNTON	ST	674	Overhead	Distribution	Luminaire	LUM HPS RWY 70W	Active	70	90435-67003	S14	CITY OF PAWTUCKET
0008	001	1	THORNTON	ST	674	Overhead	Distribution	Luminaire	LUM HPS RWY 70W	Active	70	90435-67003	S14	CITY OF PAWTUCKET
0002	000	1	THURBER	ST	676	Overhead	Distribution	Luminaire	LUM HPS RWY 70W	Active	70	90435-67003	S14	CITY OF PAWTUCKET
0004	000	1	THURBER	ST	676	Overhead	Distribution	Luminaire	LUM HPS RWY 70W	Active	70	90435-67003	S14	CITY OF PAWTUCKET
0006	000	1	THURBER	ST	676	Overhead	Distribution	Luminaire	LUM HPS RWY 70W	Active	70	90435-67003	S14	CITY OF PAWTUCKET
0001	000	1	THURSTON	ST	677	Overhead	Distribution	Luminaire	LUM HPS RWY 250W	Active	250	90435-67003	S14	CITY OF PAWTUCKET
0003	000	1	THURSTON	ST	677	Overhead	Distribution	Luminaire	LUM HPS RWY 70W	Active	70	90435-67003	S14	CITY OF PAWTUCKET
0005	000	1	THURSTON	ST	677	Overhead	Distribution	Luminaire	LUM HPS RWY 70W	Active	70	90435-67003	S14	CITY OF PAWTUCKET

0002	000	1	TIDEWATER	ST	678	Overhead	Distribution	Luminaire	LUM HPS RWY 70W	Active	70	90435-67003	S14	CITY OF PAWTUCKET
0003	000	1	TIDEWATER	ST	678	Overhead	Distribution	Luminaire	LUM HPS RWY 70W	Active	70	90435-67003	S14	CITY OF PAWTUCKET
0002	000	1	TINGLEY	ST	679	Overhead	Distribution	Luminaire	LUM HPS RWY 70W	Active	70	90435-67003	S14	CITY OF PAWTUCKET
0004	000	1	TINGLEY	ST	679	Overhead	Distribution	Luminaire	LUM HPS RWY 70W	Active	70	90435-67003	S14	CITY OF PAWTUCKET
0005	000	1	TINGLEY	ST	679	Overhead	Distribution	Luminaire	LUM HPS RWY 70W	Active	70	90435-67003	S14	CITY OF PAWTUCKET
0002	000	1	TOBIE	AVE	680	Overhead	Distribution	Luminaire	LUM HPS RWY 70W	Active	70	90435-67003	S14	CITY OF PAWTUCKET
0004	000	1	TOBIE	AVE	680	Overhead	Distribution	Luminaire	LUM HPS RWY 70W	Active	70	90435-67003	S14	CITY OF PAWTUCKET
0006	000	1	TOBIE	AVE	680	Overhead	Distribution	Luminaire	LUM HPS RWY 70W	Active	70	90435-67003	S14	CITY OF PAWTUCKET
0007	000	1	TOBIE	AVE	680	Overhead	Distribution	Luminaire	LUM HPS RWY 70W	Active	70	90435-67003	S14	CITY OF PAWTUCKET
0010	000	1	TOBIE	AVE	680	Overhead	Distribution	Luminaire	LUM HPS RWY 70W	Active	70	90435-67003	S14	CITY OF PAWTUCKET
0012	000	1	TOBIE	AVE	680	Overhead	Distribution	Luminaire	LUM HPS RWY 70W	Active	70	90435-67003	S14	CITY OF PAWTUCKET
0014	000	1	TOBIE	AVE	680	Overhead	Distribution	Luminaire	LUM HPS RWY 70W	Active	70	90435-67003	S14	CITY OF PAWTUCKET
0015	000	1	TOBIE	AVE	680	Overhead	Distribution	Luminaire	LUM HPS RWY 70W	Active	70	90435-67003	S14	CITY OF PAWTUCKET
0002	000	1	TOLEDO	AVE	681	Overhead	Distribution	Luminaire	LUM HPS RWY 70W	Active	70	90435-67003	S14	CITY OF PAWTUCKET
0003	000	1	TOLEDO	AVE	681	Overhead	Distribution	Luminaire	LUM HPS RWY 70W	Active	70	90435-67003	S14	CITY OF PAWTUCKET
0005	000	1	TOLEDO	AVE	681	Overhead	Distribution	Luminaire	LUM HPS RWY 70W	Active	70	90435-67003	S14	CITY OF PAWTUCKET
0008	000	1	TOLEDO	AVE	681	Overhead	Distribution	Luminaire	LUM HPS RWY 70W	Active	70	90435-67003	S14	CITY OF PAWTUCKET
0011	000	1	TOLEDO	AVE	681	Overhead	Distribution	Luminaire	LUM HPS RWY 70W	Active	70	90435-67003	S14	CITY OF PAWTUCKET
0013	000	1	TOLEDO	AVE	681	Overhead	Distribution	Luminaire	LUM HPS RWY 70W	Active	70	90435-67003	S14	CITY OF PAWTUCKET
0015	000	1	TOLEDO	AVE	681	Overhead	Distribution	Luminaire	LUM HPS RWY 70W	Active	70	90435-67003	S14	CITY OF PAWTUCKET
0017	000	1	TOLEDO	AVE	681	Overhead	Distribution	Luminaire	LUM HPS RWY 70W	Active	70	90435-67003	S14	CITY OF PAWTUCKET
0001	000	1	TOWER	ST	682	Overhead	Distribution	Luminaire	LUM HPS RWY 250W	Active	250	90435-67003	S14	CITY OF PAWTUCKET
0002	000	1	TOWER	ST	682	Overhead	Distribution	Luminaire	LUM HPS RWY 70W	Active	70	90435-67003	S14	CITY OF PAWTUCKET
0003	000	1	TOWER	ST	682	Overhead	Distribution	Luminaire	LUM HPS RWY 70W	Active	70	90435-67003	S14	CITY OF PAWTUCKET
0004	000	1	TOWER	ST	682	Overhead	Distribution	Luminaire	LUM HPS RWY 70W	Active	70	90435-67003	S14	CITY OF PAWTUCKET
0006	000	1	TOWER	ST	682	Overhead	Distribution	Luminaire	LUM HPS RWY 70W	Active	70	90435-67003	S14	CITY OF PAWTUCKET
0002	000	1	TRENTON	ST	683	Overhead	Distribution	Luminaire	LUM HPS RWY 70W	Active	70	90435-67003	S14	CITY OF PAWTUCKET
0007	000	1	TRENTON	ST	683	Overhead	Distribution	Luminaire	LUM HPS RWY 70W	Active	70	90435-67003	S14	CITY OF PAWTUCKET
0009	000	1	TRENTON	ST	683	Overhead	Distribution	Luminaire	LUM HPS RWY 70W	Active	70	90435-67003	S14	CITY OF PAWTUCKET
0011	000	1	TRENTON	ST	683	Overhead	Distribution	Luminaire	LUM HPS RWY 70W	Active	70	90435-67003	S14	CITY OF PAWTUCKET
0012	000	1	TRENTON	ST	683	Overhead	Distribution	Luminaire	LUM HPS RWY 70W	Active	70	90435-67003	S14	CITY OF PAWTUCKET
0012	001	1	TRENTON	ST	683	Overhead	Distribution	Luminaire	LUM HPS RWY 250W	Active	250	90435-67003	S14	CITY OF PAWTUCKET
0015	000	1	TRENTON	ST	683	Overhead	Distribution	Luminaire	LUM HPS RWY 70W	Active	70	90435-67003	S14	CITY OF PAWTUCKET
0016	001	1	TRENTON	ST	683	Overhead	Distribution	Luminaire	LUM HPS RWY 70W	Active	70	90435-67003	S14	CITY OF PAWTUCKET
0001	000	1	TRIESTE	ST	6784	Overhead	Distribution	Luminaire	LUM HPS FLD 250W	Active	250	90435-67003	S14	CITY OF PAWTUCKET
0002	000	1	TRIESTE	ST	684	Overhead	Distribution	Luminaire	LUM HPS RWY 70W	Active	70	90435-67003	S14	CITY OF PAWTUCKET
0005	000	1	TRIESTE	ST	684	Overhead	Distribution	Luminaire	LUM HPS RWY 70W	Active	70	90435-67003	S14	CITY OF PAWTUCKET
0002	000	1	TWEED	ST	685	Overhead	Distribution	Luminaire	LUM HPS RWY 70W	Active	70	90435-67003	S14	CITY OF PAWTUCKET
0005	000	1	TWEED	ST	685	Overhead	Distribution	Luminaire	LUM HPS RWY 70W	Active	70	90435-67003	S14	CITY OF PAWTUCKET
0007	000	1	TWEED	ST	685	Overhead	Distribution	Luminaire	LUM HPS RWY 70W	Active	70	90435-67003	S14	CITY OF PAWTUCKET
0009	000	1	TWEED	ST	685	Overhead	Distribution	Luminaire	LUM HPS RWY 100W	Active	100	90435-67003	S14	CITY OF PAWTUCKET
0011	000	1	TWEED	ST	685	Overhead	Distribution	Luminaire	LUM HPS RWY 100W	Active	100	90435-67003	S14	CITY OF PAWTUCKET
0012	000	1	TWEED	ST	685	Overhead	Distribution	Luminaire	LUM HPS RWY 100W	Active	100	90435-67003	S14	CITY OF PAWTUCKET
0014	000	1	TWEED	ST	685	Overhead	Distribution	Luminaire	LUM HPS RWY 70W	Active	70	90435-67003	S14	CITY OF PAWTUCKET
0015	000	1	TWEED	ST	685	Overhead	Distribution	Luminaire	LUM HPS RWY 70W	Active	70	90435-67003	S14	CITY OF PAWTUCKET
0002	000	1	TYLER	ST	686	Overhead	Distribution	Luminaire	LUM HPS RWY 70W	Active	70	90435-67003	S14	CITY OF PAWTUCKET
0005	000	1	TYLER	ST	686	Overhead	Distribution	Luminaire	LUM HPS RWY 70W	Active	70	90435-67003	S14	CITY OF PAWTUCKET
0003	000	1	NO UNION	ST	511	Overhead	Distribution	Luminaire	LUM HPS RWY 250W	Active	250	90435-67003	S14	CITY OF PAWTUCKET
0003	000	2	NO UNION	ST	511	Overhead	Distribution	Luminaire	LUM HPS RWY 250W	Active	250	90435-67003	S14	CITY OF PAWTUCKET
0004	001	1	NO UNION	ST	511	Overhead	Distribution	Luminaire	LUM HPS RWY 250W	Active	250	90435-67003	S14	CITY OF PAWTUCKET
0005	001	1	NO UNION	ST	511	Overhead	Distribution	Luminaire	LUM HPS RWY 100W	Active	100	90435-67003	S14	CITY OF PAWTUCKET
0006	000	1	NO UNION	ST	511	Overhead	Distribution	Luminaire	LUM HPS RWY 100W	Active	100	90435-67003	S14	CITY OF PAWTUCKET
0007	000	1	NO UNION	ST	511	Overhead	Distribution	Luminaire	LUM HPS RWY 100W	Active	100	90435-67003	S14	CITY OF PAWTUCKET
0006	000	1	SO UNION	ST	643	Overhead	Distribution	Luminaire	LUM HPS RWY 100W	Active	100	90435-67003	S14	CITY OF PAWTUCKET
0008	000	1	SO UNION	ST	643	Overhead	Distribution	Luminaire	LUM HPS RWY 100W	Active	100	90435-67003	S14	CITY OF PAWTUCKET
0003	000	1	UNITY	ST	688	Overhead	Distribution	Luminaire	LUM HPS RWY 70W	Active	70	90435-67003	S14	CITY OF PAWTUCKET
0004	000	2	UNITY	ST	688	Overhead	Distribution	Luminaire	LUM HPS RWY 100W	Active	100	90435-67003	S14	CITY OF PAWTUCKET
0005	000	2	UNITY	ST	688	Overhead	Distribution	Luminaire	LUM HPS RWY 100W	Active	100	90435-67003	S14	CITY OF PAWTUCKET
0002	000	1	URBAN	AVE	689	Overhead	Distribution	Luminaire	LUM HPS RWY 70W	Active	70	90435-67003	S14	CITY OF PAWTUCKET
0003	000	1	URBAN	AVE	689	Overhead	Distribution	Luminaire	LUM HPS RWY 100W	Active	100	90435-67003	S14	CITY OF PAWTUCKET
0004	000	1	URBAN	AVE	689	Overhead	Distribution	Luminaire	LUM HPS RWY 70W	Active	70	90435-67003	S14	CITY OF PAWTUCKET
0005	000	1	URBAN	AVE	689	Overhead	Distribution	Luminaire	LUM HPS RWY 70W	Active	70	90435-67003	S14	CITY OF PAWTUCKET
0006	000	1	URBAN	AVE	689	Overhead	Distribution	Luminaire	LUM HPS RWY 70W	Active	70	90435-67003	S14	CITY OF PAWTUCKET

0007	000	1	URBAN	AVE	689	Overhead	Distribution	Luminaire	LUM HPS RWY 70W	Active	70	90435-67003	S14	CITY OF PAWTUCKET
0001	000	1	UTTON	AVE	690	Overhead	Distribution	Luminaire	LUM HPS RWY 70W	Active	70	90435-67003	S14	CITY OF PAWTUCKET
0003	000	1	UTTON	AVE	690	Overhead	Distribution	Luminaire	LUM HPS RWY 70W	Active	70	90435-67003	S14	CITY OF PAWTUCKET
0004	000	1	UTTON	AVE	690	Overhead	Distribution	Luminaire	LUM HPS RWY 70W	Active	70	90435-67003	S14	CITY OF PAWTUCKET
0007	000	1	UTTON	AVE	690	Overhead	Distribution	Luminaire	LUM HPS RWY 70W	Active	70	90435-67003	S14	CITY OF PAWTUCKET
0002	000	1	VALE	ST	691	Overhead	Distribution	Luminaire	LUM HPS RWY 70W	Active	70	90435-67003	S14	CITY OF PAWTUCKET
0004	000	1	VALE	ST	691	Overhead	Distribution	Luminaire	LUM HPS RWY 70W	Active	70	90435-67003	S14	CITY OF PAWTUCKET
0005	000	1	VALE	ST	691	Overhead	Distribution	Luminaire	LUM HPS RWY 70W	Active	70	90435-67003	S14	CITY OF PAWTUCKET
0007	000	1	VALE	ST	691	Overhead	Distribution	Luminaire	LUM HPS RWY 70W	Active	70	90435-67003	S14	CITY OF PAWTUCKET
0009	000	1	VALE	ST	691	Overhead	Distribution	Luminaire	LUM HPS RWY 70W	Active	70	90435-67003	S14	CITY OF PAWTUCKET
0001	000	1	VARNUM	AVE	692	Overhead	Distribution	Luminaire	LUM HPS RWY 70W	Active	70	90435-67003	S14	CITY OF PAWTUCKET
0003	000	1	VARNUM	AVE	692	Overhead	Distribution	Luminaire	LUM HPS RWY 70W	Active	70	90435-67003	S14	CITY OF PAWTUCKET
0004	000	1	VARNUM	AVE	692	Overhead	Distribution	Luminaire	LUM HPS RWY 70W	Active	70	90435-67003	S14	CITY OF PAWTUCKET
0005	000	1	VARNUM	AVE	692	Overhead	Distribution	Luminaire	LUM HPS RWY 70W	Active	70	90435-67003	S14	CITY OF PAWTUCKET
0006	000	1	VARNUM	AVE	692	Overhead	Distribution	Luminaire	LUM HPS RWY 70W	Active	70	90435-67003	S14	CITY OF PAWTUCKET
0007	000	1	VARNUM	AVE	692	Overhead	Distribution	Luminaire	LUM HPS RWY 70W	Active	70	90435-67003	S14	CITY OF PAWTUCKET
0008	000	1	VARNUM	AVE	692	Overhead	Distribution	Luminaire	LUM HPS RWY 70W	Active	70	90435-67003	S14	CITY OF PAWTUCKET
0010	000	1	VARNUM	AVE	692	Overhead	Distribution	Luminaire	LUM HPS RWY 70W	Active	70	90435-67003	S14	CITY OF PAWTUCKET
0011	000	1	VARNUM	AVE	692	Overhead	Distribution	Luminaire	LUM HPS RWY 70W	Active	70	90435-67003	S14	CITY OF PAWTUCKET
0019	000	1	VERNON	ST	693	Overhead	Distribution	Luminaire	LUM HPS RWY 70W	Active	70	90435-67003	S14	CITY OF PAWTUCKET
0001	000	1	VINCENT	AVE	694	Overhead	Distribution	Luminaire	LUM HPS RWY 70W	Active	70	90435-67003	S14	CITY OF PAWTUCKET
0002	000	1	VINCENT	AVE	694	Overhead	Distribution	Luminaire	LUM HPS RWY 70W	Active	70	90435-67003	S14	CITY OF PAWTUCKET
0004	000	1	VINCENT	AVE	694	Overhead	Distribution	Luminaire	LUM HPS RWY 70W	Active	70	90435-67003	S14	CITY OF PAWTUCKET
0006	000	1	VINCENT	AVE	694	Overhead	Distribution	Luminaire	LUM HPS RWY 70W	Active	70	90435-67003	S14	CITY OF PAWTUCKET
0007	000	1	VINCENT	AVE	694	Overhead	Distribution	Luminaire	LUM HPS RWY 70W	Active	70	90435-67003	S14	CITY OF PAWTUCKET
0004	000	1	VINE	ST	695	Overhead	Distribution	Luminaire	LUM HPS RWY 70W	Active	70	90435-67003	S14	CITY OF PAWTUCKET
0006	000	1	VINE	ST	695	Overhead	Distribution	Luminaire	LUM HPS RWY 70W	Active	70	90435-67003	S14	CITY OF PAWTUCKET
0007	000	1	VINE	ST	695	Overhead	Distribution	Luminaire	LUM HPS RWY 70W	Active	70	90435-67003	S14	CITY OF PAWTUCKET
0008	000	1	VINE	ST	695	Overhead	Distribution	Luminaire	LUM HPS RWY 70W	Active	70	90435-67003	S14	CITY OF PAWTUCKET
0010	000	1	VINE	ST	695	Overhead	Distribution	Luminaire	LUM HPS RWY 70W	Active	70	90435-67003	S14	CITY OF PAWTUCKET
0012	000	1	VINE	ST	695	Overhead	Distribution	Luminaire	LUM HPS RWY 70W	Active	70	90435-67003	S14	CITY OF PAWTUCKET
0014	000	1	VINE	ST	695	Overhead	Distribution	Luminaire	LUM HPS RWY 70W	Active	70	90435-67003	S14	CITY OF PAWTUCKET
0015	000	1	VINE	ST	695	Overhead	Distribution	Luminaire	LUM HPS FLD 400W	Active	400	65507-94008	S14	PAWTUCKET SCHOOL DEP
0015	000	2	VINE	ST	695	Overhead	Distribution	Luminaire	LUM HPS RWY 70W	Active	70	90435-67003	S14	CITY OF PAWTUCKET
0018	000	1	VINE	ST	695	Overhead	Distribution	Luminaire	LUM HPS RWY 70W	Active	70	90435-67003	S14	CITY OF PAWTUCKET
0020	000	1	VINE	ST	695	Overhead	Distribution	Luminaire	LUM HPS RWY 70W	Active	70	90435-67003	S14	CITY OF PAWTUCKET
0022	000	1	VINE	ST	695	Overhead	Distribution	Luminaire	LUM HPS RWY 70W	Active	70	90435-67003	S14	CITY OF PAWTUCKET
0024	000	1	VINE	ST	695	Overhead	Distribution	Luminaire	LUM HPS RWY 70W	Active	70	90435-67003	S14	CITY OF PAWTUCKET
0027	000	1	VINE	ST	695	Overhead	Distribution	Luminaire	LUM HPS RWY 70W	Active	70	90435-67003	S14	CITY OF PAWTUCKET
0029	000	1	VINE	ST	695	Overhead	Distribution	Luminaire	LUM HPS RWY 70W	Active	70	90435-67003	S14	CITY OF PAWTUCKET
0031	000	1	VINE	ST	695	Overhead	Distribution	Luminaire	LUM HPS RWY 100W	Active	100	90435-67003	S14	CITY OF PAWTUCKET
0032	000	1	VINE	ST	695	Overhead	Distribution	Luminaire	LUM HPS RWY 70W	Active	70	90435-67003	S14	CITY OF PAWTUCKET
0034	000	1	VINE	ST	695	Overhead	Distribution	Luminaire	LUM HPS RWY 70W	Active	70	90435-67003	S14	CITY OF PAWTUCKET
0036	000	1	VINE	ST	695	Overhead	Distribution	Luminaire	LUM HPS RWY 70W	Active	70	90435-67003	S14	CITY OF PAWTUCKET
0038	000	1	VINE	ST	695	Overhead	Distribution	Luminaire	LUM HPS RWY 70W	Active	70	90435-67003	S14	CITY OF PAWTUCKET
0002	000	1	VINYARD	ST	696	Overhead	Distribution	Luminaire	LUM HPS RWY 70W	Active	70	90435-67003	S14	CITY OF PAWTUCKET
0004	000	1	VINYARD	ST	696	Overhead	Distribution	Luminaire	LUM HPS RWY 70W	Active	70	90435-67003	S14	CITY OF PAWTUCKET
0006	000	1	VINYARD	ST	696	Overhead	Distribution	Luminaire	LUM HPS RWY 70W	Active	70	90435-67003	S14	CITY OF PAWTUCKET
0007	000	1	VINYARD	ST	696	Overhead	Distribution	Luminaire	LUM HPS RWY 70W	Active	70	90435-67003	S14	CITY OF PAWTUCKET
0008	000	1	VINYARD	ST	696	Overhead	Distribution	Luminaire	LUM HPS RWY 70W	Active	70	90435-67003	S14	CITY OF PAWTUCKET
0003	000	1	VIVIAN	AVE	697	Overhead	Distribution	Luminaire	LUM HPS RWY 70W	Active	70	90435-67003	S14	CITY OF PAWTUCKET
0005	000	1	VIVIAN	AVE	697	Overhead	Distribution	Luminaire	LUM HPS RWY 70W	Active	70	90435-67003	S14	CITY OF PAWTUCKET
0007	000	1	VIVIAN	AVE	697	Overhead	Distribution	Luminaire	LUM HPS RWY 70W	Active	70	90435-67003	S14	CITY OF PAWTUCKET
0001	000	0	WALCOTT	ST	698	Underground	Streetlighting	Pole	POLE METAL =>25FT	Active	0	90435-67003	S14	CITY OF PAWTUCKET
0001	000	1	WALCOTT	ST	698	Underground	Streetlighting	Luminaire	LUM HPS RWY 250W	Active	250	90435-67003	S14	CITY OF PAWTUCKET
0002	000	1	WALCOTT	ST	698	Underground	Streetlighting	Luminaire	LUM HPS RWY 250W	Active	250	90435-67003	S14	CITY OF PAWTUCKET
0002	001	1	WALCOTT	ST	698	Overhead	Distribution	Luminaire	LUM HPS RWY 250W	Active	250	90435-67003	S14	CITY OF PAWTUCKET
0003	000	1	WALCOTT	ST	698	Overhead	Distribution	Luminaire	LUM HPS RWY 250W	Active	250	90435-67003	S14	CITY OF PAWTUCKET
0012	000	1	WALCOTT	ST	698	Overhead	Distribution	Luminaire	LUM HPS RWY 100W	Active	100	90435-67003	S14	CITY OF PAWTUCKET
0022	000	1	WALCOTT	ST	698	Overhead	Distribution	Luminaire	LUM HPS RWY 250W	Active	250	90435-67003	S14	CITY OF PAWTUCKET
0022	001	1	WALCOTT	ST	698	Overhead	Distribution	Luminaire	LUM HPS RWY 250W	Active	250	90435-67003	S14	CITY OF PAWTUCKET
0023	001	1	WALCOTT	ST	698	Overhead	Distribution	Luminaire	LUM HPS RWY 100W	Active	100	90435-67003	S14	CITY OF PAWTUCKET
0025	000	1	WALCOTT	ST	698	Overhead	Distribution	Luminaire	LUM HPS RWY 100W	Active	100	90435-67003	S14	CITY OF PAWTUCKET

0027	000	1	WALCOTT	ST	698	Overhead	Distribution	Luminaire	LUM HPS RWY 100W	Active	100	90435-67003	S14	CITY OF PAWTUCKET
0029	000	1	WALCOTT	ST	698	Overhead	Distribution	Luminaire	LUM HPS RWY 70W	Active	70	90435-67003	S14	CITY OF PAWTUCKET
0031	000	1	WALCOTT	ST	698	Overhead	Distribution	Luminaire	LUM HPS RWY 100W	Active	100	90435-67003	S14	CITY OF PAWTUCKET
0032	000	1	WALCOTT	ST	698	Overhead	Distribution	Luminaire	LUM HPS RWY 100W	Active	100	90435-67003	S14	CITY OF PAWTUCKET
0033	000	1	WALCOTT	ST	698	Overhead	Distribution	Luminaire	LUM HPS RWY 100W	Active	100	90435-67003	S14	CITY OF PAWTUCKET
0035	000	1	WALCOTT	ST	698	Overhead	Distribution	Luminaire	LUM HPS RWY 100W	Active	100	90435-67003	S14	CITY OF PAWTUCKET
0036	000	1	WALCOTT	ST	698	Overhead	Distribution	Luminaire	LUM HPS RWY 100W	Active	100	90435-67003	S14	CITY OF PAWTUCKET
0038	000	1	WALCOTT	ST	698	Overhead	Distribution	Luminaire	LUM HPS RWY 100W	Active	100	90435-67003	S14	CITY OF PAWTUCKET
0039	000	1	WALCOTT	ST	698	Overhead	Distribution	Luminaire	LUM HPS RWY 100W	Active	100	90435-67003	S14	CITY OF PAWTUCKET
0041	000	1	WALCOTT	ST	698	Overhead	Distribution	Luminaire	LUM HPS RWY 100W	Active	100	90435-67003	S14	CITY OF PAWTUCKET
0042	000	1	WALCOTT	ST	698	Overhead	Distribution	Luminaire	LUM HPS RWY 100W	Active	100	90435-67003	S14	CITY OF PAWTUCKET
0044	000	1	WALCOTT	ST	698	Overhead	Distribution	Luminaire	LUM HPS RWY 100W	Active	100	90435-67003	S14	CITY OF PAWTUCKET
0046	000	1	WALCOTT	ST	698	Overhead	Distribution	Luminaire	LUM HPS RWY 70W	Active	70	90435-67003	S14	CITY OF PAWTUCKET
0047	000	1	WALCOTT	ST	698	Overhead	Distribution	Luminaire	LUM HPS RWY 100W	Active	100	90435-67003	S14	CITY OF PAWTUCKET
0053	000	1	WALCOTT	ST	698	Overhead	Distribution	Luminaire	LUM HPS RWY 70W	Active	70	90435-67003	S14	CITY OF PAWTUCKET
0055	000	1	WALCOTT	ST	698	Overhead	Distribution	Luminaire	LUM HPS RWY 70W	Active	70	90435-67003	S14	CITY OF PAWTUCKET
0057	000	1	WALCOTT	ST	698	Overhead	Distribution	Luminaire	LUM HPS RWY 70W	Active	70	90435-67003	S14	CITY OF PAWTUCKET
0059	000	1	WALCOTT	ST	698	Overhead	Distribution	Luminaire	LUM HPS RWY 70W	Active	70	90435-67003	S14	CITY OF PAWTUCKET
0061	000	1	WALCOTT	ST	698	Overhead	Distribution	Luminaire	LUM HPS RWY 70W	Active	70	90435-67003	S14	CITY OF PAWTUCKET
0063	000	1	WALCOTT	ST	698	Overhead	Distribution	Luminaire	LUM HPS RWY 70W	Active	70	90435-67003	S14	CITY OF PAWTUCKET
0001	000	1	WALDO	ST	699	Overhead	Distribution	Luminaire	LUM HPS RWY 70W	Active	70	90435-67003	S14	CITY OF PAWTUCKET
0002	000	1	WALDO	ST	699	Overhead	Distribution	Luminaire	LUM HPS RWY 100W	Active	100	90435-67003	S14	CITY OF PAWTUCKET
0004	000	1	WALDO	ST	699	Overhead	Distribution	Luminaire	LUM HPS RWY 100W	Active	100	90435-67003	S14	CITY OF PAWTUCKET
0006	000	1	WALDO	ST	699	Overhead	Distribution	Luminaire	LUM HPS RWY 70W	Active	70	90435-67003	S14	CITY OF PAWTUCKET
0002	000	1	WALKER	ST	700	Overhead	Distribution	Luminaire	LUM HPS RWY 70W	Active	70	90435-67003	S14	CITY OF PAWTUCKET
0004	000	1	WALKER	ST	700	Overhead	Distribution	Luminaire	LUM HPS RWY 70W	Active	70	90435-67003	S14	CITY OF PAWTUCKET
0006	000	1	WALKER	ST	700	Overhead	Distribution	Luminaire	LUM HPS RWY 70W	Active	70	90435-67003	S14	CITY OF PAWTUCKET
0002	000	1	WALNUT	ST	701	Overhead	Distribution	Luminaire	LUM HPS RWY 70W	Active	70	90435-67003	S14	CITY OF PAWTUCKET
0004	000	1	WALNUT	ST	701	Overhead	Distribution	Luminaire	LUM HPS RWY 70W	Active	70	90435-67003	S14	CITY OF PAWTUCKET
0001	000	1	WALTHAM	ST	702	Overhead	Distribution	Luminaire	LUM HPS RWY 70W	Active	70	90435-67003	S14	CITY OF PAWTUCKET
0002	000	1	WALTHAM	ST	702	Overhead	Distribution	Luminaire	LUM HPS RWY 70W	Active	70	90435-67003	S14	CITY OF PAWTUCKET
0003	000	1	WALTHAM	ST	702	Overhead	Distribution	Luminaire	LUM HPS RWY 70W	Active	70	90435-67003	S14	CITY OF PAWTUCKET
0004	000	1	WALTHAM	ST	702	Overhead	Distribution	Luminaire	LUM HPS RWY 70W	Active	70	90435-67003	S14	CITY OF PAWTUCKET
0006	000	1	WALTHAM	ST	702	Overhead	Distribution	Luminaire	LUM HPS RWY 70W	Active	70	90435-67003	S14	CITY OF PAWTUCKET
0007	000	1	WALTHAM	ST	702	Overhead	Distribution	Luminaire	LUM HPS RWY 70W	Active	70	90435-67003	S14	CITY OF PAWTUCKET
0008	000	1	WALTHAM	ST	702	Overhead	Distribution	Luminaire	LUM HPS RWY 70W	Active	70	90435-67003	S14	CITY OF PAWTUCKET
0009	000	1	WALTHAM	ST	702	Overhead	Distribution	Luminaire	LUM HPS RWY 70W	Active	70	90435-67003	S14	CITY OF PAWTUCKET
0001	000	1	WAR ADMIRAL	PL	750	Overhead	Distribution	Luminaire	LUM HPS RWY 70W	Active	70	90435-67003	S14	CITY OF PAWTUCKET
0002	000	1	WAR ADMIRAL	PL	750	Overhead	Distribution	Luminaire	LUM HPS RWY 70W	Active	70	90435-67003	S14	CITY OF PAWTUCKET
0001	000	1	WARREN	AVE	703	Overhead	Distribution	Luminaire	LUM HPS RWY 70W	Active	70	90435-67003	S14	CITY OF PAWTUCKET
0002	000	1	WARREN	AVE	703	Overhead	Distribution	Luminaire	LUM HPS RWY 70W	Active	70	90435-67003	S14	CITY OF PAWTUCKET
0003	000	1	WARREN	AVE	703	Overhead	Distribution	Luminaire	LUM HPS RWY 70W	Active	70	90435-67003	S14	CITY OF PAWTUCKET
0003	001	1	WARREN	AVE	703	Overhead	Distribution	Luminaire	LUM HPS RWY 70W	Active	70	90435-67003	S14	CITY OF PAWTUCKET
0006	000	1	WARREN	AVE	703	Overhead	Distribution	Luminaire	LUM HPS RWY 70W	Active	70	90435-67003	S14	CITY OF PAWTUCKET
0008	000	1	WARREN	AVE	703	Overhead	Distribution	Luminaire	LUM HPS RWY 70W	Active	70	90435-67003	S14	CITY OF PAWTUCKET
0010	000	1	WARREN	AVE	703	Overhead	Distribution	Luminaire	LUM HPS RWY 70W	Active	70	90435-67003	S14	CITY OF PAWTUCKET
0011	000	1	WARREN	AVE	703	Overhead	Distribution	Luminaire	LUM HPS RWY 70W	Active	70	90435-67003	S14	CITY OF PAWTUCKET
0013	000	1	WARREN	AVE	703	Overhead	Distribution	Luminaire	LUM HPS RWY 70W	Active	70	90435-67003	S14	CITY OF PAWTUCKET
0016	000	1	WARREN	AVE	703	Overhead	Distribution	Luminaire	LUM HPS RWY 70W	Active	70	90435-67003	S14	CITY OF PAWTUCKET
0017	000	1	WARREN	AVE	703	Overhead	Distribution	Luminaire	LUM HPS RWY 70W	Active	70	90435-67003	S14	CITY OF PAWTUCKET
0019	000	1	WARREN	AVE	703	Overhead	Distribution	Luminaire	LUM HPS RWY 70W	Active	70	90435-67003	S14	CITY OF PAWTUCKET
0021	000	1	WARREN	AVE	703	Overhead	Distribution	Luminaire	LUM HPS RWY 70W	Active	70	90435-67003	S14	CITY OF PAWTUCKET
0022	000	1	WARREN	AVE	703	Overhead	Distribution	Luminaire	LUM HPS RWY 70W	Active	70	90435-67003	S14	CITY OF PAWTUCKET
0001	000	1	WARWICK	RD	704	Overhead	Distribution	Luminaire	LUM HPS RWY 70W	Active	70	90435-67003	S14	CITY OF PAWTUCKET
0002	000	1	WARWICK	RD	704	Overhead	Distribution	Luminaire	LUM HPS RWY 70W	Active	70	90435-67003	S14	CITY OF PAWTUCKET
0003	000	1	WARWICK	RD	704	Overhead	Distribution	Luminaire	LUM HPS RWY 70W	Active	70	90435-67003	S14	CITY OF PAWTUCKET
0004	000	1	WARWICK	RD	704	Overhead	Distribution	Luminaire	LUM HPS RWY 70W	Active	70	90435-67003	S14	CITY OF PAWTUCKET
0006	000	1	WARWICK	RD	704	Overhead	Distribution	Luminaire	LUM HPS RWY 100W	Active	100	90435-67003	S14	CITY OF PAWTUCKET
0007	000	1	WARWICK	RD	704	Overhead	Distribution	Luminaire	LUM HPS RWY 70W	Active	70	90435-67003	S14	CITY OF PAWTUCKET
0009	000	1	WARWICK	RD	704	Overhead	Distribution	Luminaire	LUM HPS RWY 70W	Active	70	90435-67003	S14	CITY OF PAWTUCKET
0012	001	1	WARWICK	RD	704	Overhead	Distribution	Luminaire	LUM HPS RWY 100W	Active	100	90435-67003	S14	CITY OF PAWTUCKET
0013	000	1	WARWICK	RD	704	Overhead	Distribution	Luminaire	LUM HPS RWY 70W	Active	70	90435-67003	S14	CITY OF PAWTUCKET
0015	000	1	WARWICK	RD	704	Overhead	Distribution	Luminaire	LUM HPS RWY 70W	Active	70	90435-67003	S14	CITY OF PAWTUCKET

0002	000	1	WASAGA	RD	705	Overhead	Distribution	Luminaire	LUM HPS RWY 70W	Active	70	90435-67003	S14	CITY OF PAWTUCKET
0004	000	1	WASAGA	RD	705	Overhead	Distribution	Luminaire	LUM HPS RWY 70W	Active	70	90435-67003	S14	CITY OF PAWTUCKET
0002	000	1	WASHBURN	ST	706	Overhead	Distribution	Luminaire	LUM HPS RWY 70W	Active	70	90435-67003	S14	CITY OF PAWTUCKET
0001	000	1	WASHINGTON	ST	707	Overhead	Distribution	Luminaire	LUM HPS RWY 70W	Active	70	90435-67003	S14	CITY OF PAWTUCKET
0002	000	1	WASHINGTON	ST	707	Overhead	Distribution	Luminaire	LUM HPS RWY 70W	Active	70	90435-67003	S14	CITY OF PAWTUCKET
0003	000	1	WASHINGTON	ST	707	Overhead	Distribution	Luminaire	LUM HPS RWY 100W	Active	100	90435-67003	S14	CITY OF PAWTUCKET
0004	001	1	WASHINGTON	ST	707	Overhead	Distribution	Luminaire	LUM HPS RWY 70W	Active	70	90435-67003	S14	CITY OF PAWTUCKET
0006	000	1	WASHINGTON	ST	707	Overhead	Distribution	Luminaire	LUM HPS RWY 70W	Active	70	90435-67003	S14	CITY OF PAWTUCKET
0001	000	0	WATER	ST	708	Underground	Streetlighting	Pole	POLE METAL =>25FT	Active	0	90435-67003	S14	CITY OF PAWTUCKET
0001	000	1	WATER	ST	708	Underground	Streetlighting	Luminaire	LUM HPS RWY 250W	Active	250	90435-67003	S14	CITY OF PAWTUCKET
0002	000	0	WATER	ST	708	Underground	Streetlighting	Pole	POLE METAL =>25FT	Active	0	90435-67003	S14	CITY OF PAWTUCKET
0002	000	1	WATER	ST	708	Underground	Streetlighting	Luminaire	LUM HPS RWY 250W	Active	250	90435-67003	S14	CITY OF PAWTUCKET
0003	000	0	WATER	ST	708	Underground	Streetlighting	Pole	POLE METAL =>25FT	Active	0	90435-67003	S14	CITY OF PAWTUCKET
0003	000	1	WATER	ST	708	Underground	Streetlighting	Luminaire	LUM HPS RWY 100W	Active	100	90435-67003	S14	CITY OF PAWTUCKET
0004	000	0	WATER	ST	708	Underground	Streetlighting	Pole	POLE METAL =>25FT	Active	0	90435-67003	S14	CITY OF PAWTUCKET
0004	000	1	WATER	ST	708	Underground	Streetlighting	Luminaire	LUM HPS RWY 250W	Active	250	90435-67003	S14	CITY OF PAWTUCKET
0005	000	0	WATER	ST	708	Underground	Streetlighting	Pole	POLE METAL =>25FT	Active	0	90435-67003	S14	CITY OF PAWTUCKET
0005	000	1	WATER	ST	708	Underground	Streetlighting	Luminaire	LUM HPS RWY 250W	Active	250	90435-67003	S14	CITY OF PAWTUCKET
0006	000	0	WATER	ST	708	Underground	Streetlighting	Pole	POLE METAL =>25FT	Active	0	90435-67003	S14	CITY OF PAWTUCKET
0006	000	1	WATER	ST	708	Underground	Streetlighting	Luminaire	LUM HPS RWY 250W	Active	250	90435-67003	S14	CITY OF PAWTUCKET
0007	000	0	WATER	ST	708	Underground	Streetlighting	Pole	POLE METAL =>25FT	Active	0	90435-67003	S14	CITY OF PAWTUCKET
0007	000	1	WATER	ST	708	Underground	Streetlighting	Luminaire	LUM HPS RWY 250W	Active	250	90435-67003	S14	CITY OF PAWTUCKET
0008	000	0	WATER	ST	708	Underground	Streetlighting	Pole	POLE METAL =>25FT	Active	0	90435-67003	S14	CITY OF PAWTUCKET
0008	000	1	WATER	ST	708	Underground	Streetlighting	Luminaire	LUM HPS RWY 250W	Active	250	90435-67003	S14	CITY OF PAWTUCKET
0009	000	0	WATER	ST	708	Underground	Streetlighting	Pole	POLE METAL =>25FT	Active	0	90435-67003	S14	CITY OF PAWTUCKET
0009	000	1	WATER	ST	708	Underground	Streetlighting	Luminaire	LUM HPS RWY 250W	Active	250	90435-67003	S14	CITY OF PAWTUCKET
0010	000	0	WATER	ST	708	Underground	Streetlighting	Pole	POLE METAL =>25FT	Active	0	90435-67003	S14	CITY OF PAWTUCKET
0010	000	1	WATER	ST	708	Underground	Streetlighting	Luminaire	LUM HPS RWY 250W	Active	250	90435-67003	S14	CITY OF PAWTUCKET
0011	000	0	WATER	ST	708	Underground	Streetlighting	Pole	POLE METAL =>25FT	Active	0	90435-67003	S14	CITY OF PAWTUCKET
0011	000	1	WATER	ST	708	Underground	Streetlighting	Luminaire	LUM HPS RWY 250W	Active	250	90435-67003	S14	CITY OF PAWTUCKET
0012	000	0	WATER	ST	708	Underground	Streetlighting	Pole	POLE METAL =>25FT	Active	0	90435-67003	S14	CITY OF PAWTUCKET
0012	000	1	WATER	ST	708	Underground	Streetlighting	Luminaire	LUM HPS RWY 250W	Active	250	90435-67003	S14	CITY OF PAWTUCKET
0002	000	1	WATERMAN	ST	709	Overhead	Distribution	Luminaire	LUM HPS RWY 70W	Active	70	90435-67003	S14	CITY OF PAWTUCKET
0003	000	1	WATERMAN	ST	709	Overhead	Distribution	Luminaire	LUM HPS RWY 100W	Active	100	90435-67003	S14	CITY OF PAWTUCKET
0006	000	1	WATERMAN	ST	709	Overhead	Distribution	Luminaire	LUM HPS RWY 70W	Active	70	90435-67003	S14	CITY OF PAWTUCKET
0011	000	1	WATERMAN	ST	709	Overhead	Distribution	Luminaire	LUM HPS RWY 70W	Active	70	90435-67003	S14	CITY OF PAWTUCKET
0013	000	1	WATERMAN	ST	709	Overhead	Distribution	Luminaire	LUM HPS RWY 250W	Active	250	90435-67003	S14	CITY OF PAWTUCKET
0015	000	1	WATERMAN	ST	709	Overhead	Distribution	Luminaire	LUM HPS RWY 70W	Active	70	90435-67003	S14	CITY OF PAWTUCKET
0016	000	1	WATERMAN	ST	709	Overhead	Distribution	Luminaire	LUM HPS RWY 70W	Active	70	90435-67003	S14	CITY OF PAWTUCKET
0002	000	1	WAVERLY	PL	710	Overhead	Distribution	Luminaire	LUM HPS RWY 70W	Active	70	90435-67003	S14	CITY OF PAWTUCKET
0003	000	1	WAVERLY	PL	710	Overhead	Distribution	Luminaire	LUM HPS RWY 70W	Active	70	90435-67003	S14	CITY OF PAWTUCKET
0002	000	1	WEBB	ST	711	Overhead	Distribution	Luminaire	LUM HPS RWY 70W	Active	70	90435-67003	S14	CITY OF PAWTUCKET
0003	000	1	WEBB	ST	711	Overhead	Distribution	Luminaire	LUM HPS RWY 70W	Active	70	90435-67003	S14	CITY OF PAWTUCKET
0004	000	1	WEBB	ST	711	Overhead	Distribution	Luminaire	LUM HPS RWY 70W	Active	70	90435-67003	S14	CITY OF PAWTUCKET
0005	000	1	WEBB	ST	711	Overhead	Distribution	Luminaire	LUM HPS RWY 70W	Active	70	90435-67003	S14	CITY OF PAWTUCKET
0001	002	1	WEBSTER	ST	712	Overhead	Distribution	Luminaire	LUM HPS RWY 100W	Active	100	90435-67003	S14	CITY OF PAWTUCKET
0002	000	1	WEBSTER	ST	712	Overhead	Distribution	Luminaire	LUM HPS RWY 100W	Active	100	90435-67003	S14	CITY OF PAWTUCKET
0003	001	1	WEBSTER	ST	712	Overhead	Distribution	Luminaire	LUM HPS RWY 100W	Active	100	90435-67003	S14	CITY OF PAWTUCKET
0005	001	1	WEBSTER	ST	712	Overhead	Distribution	Luminaire	LUM HPS RWY 100W	Active	100	90435-67003	S14	CITY OF PAWTUCKET
0006	000	1	WEBSTER	ST	712	Overhead	Distribution	Luminaire	LUM HPS RWY 100W	Active	100	90435-67003	S14	CITY OF PAWTUCKET
0007	000	1	WEBSTER	ST	712	Overhead	Distribution	Luminaire	LUM HPS RWY 70W	Active	70	90435-67003	S14	CITY OF PAWTUCKET
0010	000	1	WEBSTER	ST	712	Overhead	Distribution	Luminaire	LUM HPS RWY 70W	Active	70	90435-67003	S14	CITY OF PAWTUCKET
0012	000	1	WEBSTER	ST	712	Overhead	Distribution	Luminaire	LUM HPS RWY 70W	Active	70	90435-67003	S14	CITY OF PAWTUCKET
0013	000	1	WEBSTER	ST	712	Overhead	Distribution	Luminaire	LUM HPS RWY 70W	Active	70	90435-67003	S14	CITY OF PAWTUCKET
0015	000	1	WEBSTER	ST	712	Overhead	Distribution	Luminaire	LUM HPS RWY 70W	Active	70	90435-67003	S14	CITY OF PAWTUCKET
0017	000	1	WEBSTER	ST	712	Overhead	Distribution	Luminaire	LUM HPS RWY 70W	Active	70	90435-67003	S14	CITY OF PAWTUCKET
0019	000	1	WEBSTER	ST	712	Overhead	Distribution	Luminaire	LUM HPS RWY 70W	Active	70	90435-67003	S14	CITY OF PAWTUCKET
0021	000	1	WEBSTER	ST	712	Overhead	Distribution	Luminaire	LUM HPS RWY 100W	Active	100	90435-67003	S14	CITY OF PAWTUCKET
0023	000	1	WEBSTER	ST	712	Overhead	Distribution	Luminaire	LUM HPS RWY 70W	Active	70	90435-67003	S14	CITY OF PAWTUCKET
0024	000	1	WEBSTER	ST	712	Overhead	Distribution	Luminaire	LUM HPS RWY 70W	Active	70	90435-67003	S14	CITY OF PAWTUCKET
0026	000	1	WEBSTER	ST	712	Overhead	Distribution	Luminaire	LUM HPS RWY 70W	Active	70	90435-67003	S14	CITY OF PAWTUCKET
0028	000	1	WEBSTER	ST	712	Overhead	Distribution	Luminaire	LUM HPS RWY 70W	Active	70	90435-67003	S14	CITY OF PAWTUCKET
0002	000	1	WEEDEN	ST	713	Overhead	Distribution	Luminaire	LUM HPS RWY 100W	Active	100	90435-67003	S14	CITY OF PAWTUCKET

0006	000	1	WEEDEN	ST	713	Overhead	Distribution	Luminaire	LUM HPS RWY 100W	Active	100	90435-67003	S14	CITY OF PAWTUCKET
0008	000	1	WEEDEN	ST	713	Overhead	Distribution	Luminaire	LUM HPS RWY 100W	Active	100	90435-67003	S14	CITY OF PAWTUCKET
0010	000	1	WEEDEN	ST	713	Overhead	Distribution	Luminaire	LUM HPS RWY 100W	Active	100	90435-67003	S14	CITY OF PAWTUCKET
0011	000	1	WEEDEN	ST	713	Overhead	Distribution	Luminaire	LUM HPS RWY 100W	Active	100	90435-67003	S14	CITY OF PAWTUCKET
0018	000	1	WEEDEN	ST	713	Overhead	Distribution	Luminaire	LUM HPS RWY 100W	Active	100	90435-67003	S14	CITY OF PAWTUCKET
0019	000	1	WEEDEN	ST	713	Overhead	Distribution	Luminaire	LUM HPS RWY 100W	Active	100	90435-67003	S14	CITY OF PAWTUCKET
0022	000	1	WEEDEN	ST	713	Overhead	Distribution	Luminaire	LUM HPS RWY 100W	Active	100	90435-67003	S14	CITY OF PAWTUCKET
0024	000	1	WEEDEN	ST	713	Overhead	Distribution	Luminaire	LUM HPS RWY 70W	Active	70	90435-67003	S14	CITY OF PAWTUCKET
0026	000	1	WEEDEN	ST	713	Overhead	Distribution	Luminaire	LUM HPS RWY 100W	Active	100	90435-67003	S14	CITY OF PAWTUCKET
0028	000	1	WEEDEN	ST	713	Overhead	Distribution	Luminaire	LUM HPS RWY 250W	Active	250	90435-67003	S14	CITY OF PAWTUCKET
0030	000	1	WEEDEN	ST	713	Overhead	Distribution	Luminaire	LUM HPS RWY 250W	Active	250	90435-67003	S14	CITY OF PAWTUCKET
0034	000	1	WEEDEN	ST	713	Overhead	Distribution	Luminaire	LUM HPS RWY 250W	Active	250	90435-67003	S14	CITY OF PAWTUCKET
0036	000	1	WEEDEN	ST	713	Overhead	Distribution	Luminaire	LUM HPS RWY 250W	Active	250	90435-67003	S14	CITY OF PAWTUCKET
0038	000	1	WEEDEN	ST	713	Overhead	Distribution	Luminaire	LUM HPS RWY 250W	Active	250	90435-67003	S14	CITY OF PAWTUCKET
0040	000	1	WEEDEN	ST	713	Overhead	Distribution	Luminaire	LUM HPS RWY 250W	Active	250	90435-67003	S14	CITY OF PAWTUCKET
0042	000	1	WEEDEN	ST	713	Overhead	Distribution	Luminaire	LUM HPS RWY 250W	Active	250	90435-67003	S14	CITY OF PAWTUCKET
0044	000	1	WEEDEN	ST	713	Overhead	Distribution	Luminaire	LUM HPS RWY 250W	Active	250	90435-67003	S14	CITY OF PAWTUCKET
0045	000	1	WEEDEN	ST	713	Overhead	Distribution	Luminaire	LUM HPS RWY 250W	Active	250	90435-67003	S14	CITY OF PAWTUCKET
0046	000	1	WEEDEN	ST	713	Overhead	Distribution	Luminaire	LUM HPS RWY 250W	Active	250	90435-67003	S14	CITY OF PAWTUCKET
0049	000	1	WEEDEN	ST	713	Overhead	Distribution	Luminaire	LUM HPS RWY 250W	Active	250	90435-67003	S14	CITY OF PAWTUCKET
0050	000	1	WEEDEN	ST	713	Overhead	Distribution	Luminaire	LUM HPS RWY 250W	Active	250	90435-67003	S14	CITY OF PAWTUCKET
0053	000	1	WEEDEN	ST	713	Overhead	Distribution	Luminaire	LUM HPS RWY 250W	Active	250	90435-67003	S14	CITY OF PAWTUCKET
0054	000	1	WEEDEN	ST	713	Overhead	Distribution	Luminaire	LUM HPS FLD 250W	Active	250	90435-67003	S14	CITY OF PAWTUCKET
0057	000	1	WEEDEN	ST	713	Overhead	Distribution	Luminaire	LUM HPS RWY 250W	Active	250	90435-67003	S14	CITY OF PAWTUCKET
0058	000	1	WEEDEN	ST	713	Overhead	Distribution	Luminaire	LUM HPS RWY 250W	Active	250	90435-67003	S14	CITY OF PAWTUCKET
0061	000	1	WEEDEN	ST	713	Overhead	Distribution	Luminaire	LUM HPS RWY 250W	Active	250	90435-67003	S14	CITY OF PAWTUCKET
0062	000	1	WEEDEN	ST	713	Overhead	Distribution	Luminaire	LUM HPS FLD 400W	Active	400	3371-62008	S14	PAWTUCKET HOUSING AUTHORITY
0062	000	2	WEEDEN	ST	713	Overhead	Distribution	Luminaire	LUM HPS RWY 250W	Active	250	90435-67003	S14	CITY OF PAWTUCKET
0064	001	1	WEEDEN	ST	713	Overhead	Distribution	Luminaire	LUM HPS FLD 400W	Active	400	3371-62008	S14	PAWTUCKET HOUSING AUTHORITY
0064	001	2	WEEDEN	ST	713	Overhead	Distribution	Luminaire	LUM HPS RWY 250W	Active	250	90435-67003	S14	CITY OF PAWTUCKET
0064	002	1	WEEDEN	ST	713	Overhead	Distribution	Luminaire	LUM HPS RWY 250W	Active	250	90435-67003	S14	CITY OF PAWTUCKET
0066	000	1	WEEDEN	ST	713	Overhead	Distribution	Luminaire	LUM HPS RWY 250W	Active	250	90435-67003	S14	CITY OF PAWTUCKET
0067	000	1	WEEDEN	ST	713	Overhead	Distribution	Luminaire	LUM HPS RWY 100W	Active	100	90435-67003	S14	CITY OF PAWTUCKET
0069	000	1	WEEDEN	ST	713	Overhead	Distribution	Luminaire	LUM HPS RWY 100W	Active	100	90435-67003	S14	CITY OF PAWTUCKET
0070	001	1	WEEDEN	ST	713	Overhead	Distribution	Luminaire	LUM HPS RWY 100W	Active	100	90435-67003	S14	CITY OF PAWTUCKET
0071	000	1	WEEDEN	ST	713	Overhead	Distribution	Luminaire	LUM HPS RWY 100W	Active	100	90435-67003	S14	CITY OF PAWTUCKET
0072	001	1	WEEDEN	ST	713	Overhead	Distribution	Luminaire	LUM HPS RWY 100W	Active	100	90435-67003	S14	CITY OF PAWTUCKET
0073	000	1	WEEDEN	ST	713	Overhead	Distribution	Luminaire	LUM HPS RWY 100W	Active	100	90435-67003	S14	CITY OF PAWTUCKET
0074	001	1	WEEDEN	ST	713	Overhead	Distribution	Luminaire	LUM HPS RWY 100W	Active	100	90435-67003	S14	CITY OF PAWTUCKET
0075	000	1	WEEDEN	ST	713	Overhead	Distribution	Luminaire	LUM HPS RWY 100W	Active	100	90435-67003	S14	CITY OF PAWTUCKET
0075	002	1	WEEDEN	ST	713	Overhead	Distribution	Luminaire	LUM HPS RWY 100W	Active	100	90435-67003	S14	CITY OF PAWTUCKET
0076	000	1	WEEDEN	ST	713	Overhead	Distribution	Luminaire	LUM HPS RWY 100W	Active	100	90435-67003	S14	CITY OF PAWTUCKET
0077	001	1	WEEDEN	ST	713	Overhead	Distribution	Luminaire	LUM HPS RWY 250W	Active	250	90435-67003	S14	CITY OF PAWTUCKET
0078	000	1	WEEDEN	ST	713	Overhead	Distribution	Luminaire	LUM HPS RWY 250W	Active	250	90435-67003	S14	CITY OF PAWTUCKET
0078	003	1	WEEDEN	ST	713	Overhead	Distribution	Luminaire	LUM HPS RWY 250W	Active	250	90435-67003	S14	CITY OF PAWTUCKET
0079	001	1	WEEDEN	ST	713	Overhead	Distribution	Luminaire	LUM HPS RWY 100W	Active	100	90435-67003	S14	CITY OF PAWTUCKET
0080	000	1	WEEDEN	ST	713	Overhead	Distribution	Luminaire	LUM HPS RWY 100W	Active	100	90435-67003	S14	CITY OF PAWTUCKET
0081	001	1	WEEDEN	ST	713	Overhead	Distribution	Luminaire	LUM HPS RWY 100W	Active	100	90435-67003	S14	CITY OF PAWTUCKET
0082	000	1	WEEDEN	ST	713	Overhead	Distribution	Luminaire	LUM HPS RWY 100W	Active	100	90435-67003	S14	CITY OF PAWTUCKET
0082	001	1	WEEDEN	ST	713	Overhead	Distribution	Luminaire	LUM HPS RWY 100W	Active	100	90435-67003	S14	CITY OF PAWTUCKET
0083	001	1	WEEDEN	ST	713	Overhead	Distribution	Luminaire	LUM HPS RWY 250W	Active	250	90435-67003	S14	CITY OF PAWTUCKET
0084	000	1	WEEDEN	ST	713	Overhead	Distribution	Luminaire	LUM HPS RWY 100W	Active	100	90435-67003	S14	CITY OF PAWTUCKET
0085	001	1	WEEDEN	ST	713	Overhead	Distribution	Luminaire	LUM HPS RWY 100W	Active	100	90435-67003	S14	CITY OF PAWTUCKET
0086	000	1	WEEDEN	ST	713	Overhead	Distribution	Luminaire	LUM HPS RWY 100W	Active	100	90435-67003	S14	CITY OF PAWTUCKET
0087	001	1	WEEDEN	ST	713	Overhead	Distribution	Luminaire	LUM HPS RWY 100W	Active	100	90435-67003	S14	CITY OF PAWTUCKET
0088	000	1	WEEDEN	ST	713	Overhead	Distribution	Luminaire	LUM HPS RWY 100W	Active	100	90435-67003	S14	CITY OF PAWTUCKET
0089	001	1	WEEDEN	ST	713	Overhead	Distribution	Luminaire	LUM HPS RWY 100W	Active	100	90435-67003	S14	CITY OF PAWTUCKET
0090	000	1	WEEDEN	ST	713	Overhead	Distribution	Luminaire	LUM HPS RWY 100W	Active	100	90435-67003	S14	CITY OF PAWTUCKET
0091	002	1	WEEDEN	ST	713	Overhead	Distribution	Luminaire	LUM HPS RWY 100W	Active	100	90435-67003	S14	CITY OF PAWTUCKET
0093	000	1	WEEDEN	ST	713	Overhead	Distribution	Luminaire	LUM HPS RWY 100W	Active	100	90435-67003	S14	CITY OF PAWTUCKET
0094	000	1	WEEDEN	ST	713	Overhead	Distribution	Luminaire	LUM HPS RWY 250W	Active	250	90435-67003	S14	CITY OF PAWTUCKET
0097	001	1	WEEDEN	ST	713	Overhead	Distribution	Luminaire	LUM HPS RWY 100W	Active	100	90435-67003	S14	CITY OF PAWTUCKET
0098	000	1	WEEDEN	ST	713	Overhead	Distribution	Luminaire	LUM HPS RWY 100W	Active	100	90435-67003	S14	CITY OF PAWTUCKET

0099	000	1	WEEDEN	ST	713	Overhead	Distribution	Luminaire	LUM HPS RWY 100W	Active	100	90435-67003	S14	CITY OF PAWTUCKET
0100	000	1	WEEDEN	ST	713	Overhead	Distribution	Luminaire	LUM HPS RWY 70W	Active	70	90435-67003	S14	CITY OF PAWTUCKET
0101	000	1	WEEDEN	ST	713	Overhead	Distribution	Luminaire	LUM HPS RWY 100W	Active	100	90435-67003	S14	CITY OF PAWTUCKET
0103	000	1	WEEDEN	ST	713	Overhead	Distribution	Luminaire	LUM HPS RWY 250W	Active	250	90435-67003	S14	CITY OF PAWTUCKET
0106	000	1	WEEDEN	ST	713	Overhead	Distribution	Luminaire	LUM HPS RWY 70W	Active	70	90435-67003	S14	CITY OF PAWTUCKET
0107	000	1	WEEDEN	ST	713	Overhead	Distribution	Luminaire	LUM HPS RWY 70W	Active	70	90435-67003	S14	CITY OF PAWTUCKET
0108	000	1	WEEDEN	ST	713	Overhead	Distribution	Luminaire	LUM HPS RWY 70W	Active	70	90435-67003	S14	CITY OF PAWTUCKET
0004	000	1	WELDEN	ST	714	Overhead	Distribution	Luminaire	LUM HPS RWY 70W	Active	70	90435-67003	S14	CITY OF PAWTUCKET
0006	000	1	WELDEN	ST	714	Overhead	Distribution	Luminaire	LUM HPS RWY 70W	Active	70	90435-67003	S14	CITY OF PAWTUCKET
0002	000	1	WELLESLEY	AVE	715	Overhead	Distribution	Luminaire	LUM HPS RWY 70W	Active	70	90435-67003	S14	CITY OF PAWTUCKET
0002	000	1	WENDELL	ST	716	Overhead	Distribution	Luminaire	LUM HPS RWY 70W	Active	70	90435-67003	S14	CITY OF PAWTUCKET
0004	000	1	WENDELL	ST	716	Overhead	Distribution	Luminaire	LUM HPS RWY 70W	Active	70	90435-67003	S14	CITY OF PAWTUCKET
0006	000	1	WENDELL	ST	716	Overhead	Distribution	Luminaire	LUM HPS RWY 70W	Active	70	90435-67003	S14	CITY OF PAWTUCKET
0008	000	1	WENDELL	ST	716	Overhead	Distribution	Luminaire	LUM HPS RWY 70W	Active	70	90435-67003	S14	CITY OF PAWTUCKET
0001	000	1	WEST	AVE	717	Overhead	Distribution	Luminaire	LUM HPS RWY 100W	Active	100	90435-67003	S14	CITY OF PAWTUCKET
0002	000	1	WEST	AVE	717	Overhead	Distribution	Luminaire	LUM HPS RWY 100W	Active	100	90435-67003	S14	CITY OF PAWTUCKET
0003	000	1	WEST	AVE	717	Overhead	Distribution	Luminaire	LUM HPS RWY 100W	Active	100	90435-67003	S14	CITY OF PAWTUCKET
0004	000	1	WEST	AVE	717	Overhead	Distribution	Luminaire	LUM HPS RWY 100W	Active	100	90435-67003	S14	CITY OF PAWTUCKET
0006	000	1	WEST	AVE	717	Overhead	Distribution	Luminaire	LUM HPS RWY 100W	Active	100	90435-67003	S14	CITY OF PAWTUCKET
0008	000	1	WEST	AVE	717	Overhead	Distribution	Luminaire	LUM HPS RWY 70W	Active	70	90435-67003	S14	CITY OF PAWTUCKET
0009	000	1	WEST	AVE	717	Overhead	Distribution	Luminaire	LUM HPS RWY 100W	Active	100	90435-67003	S14	CITY OF PAWTUCKET
0013	000	1	WEST	AVE	717	Overhead	Distribution	Luminaire	LUM HPS RWY 100W	Active	100	90435-67003	S14	CITY OF PAWTUCKET
0014	000	1	WEST	AVE	717	Overhead	Distribution	Luminaire	LUM HPS RWY 70W	Active	70	90435-67003	S14	CITY OF PAWTUCKET
0016	000	1	WEST	AVE	717	Overhead	Distribution	Luminaire	LUM HPS RWY 100W	Active	100	90435-67003	S14	CITY OF PAWTUCKET
0017	000	1	WEST	AVE	717	Overhead	Distribution	Luminaire	LUM HPS RWY 100W	Active	100	90435-67003	S14	CITY OF PAWTUCKET
0018	000	1	WEST	AVE	717	Overhead	Distribution	Luminaire	LUM HPS RWY 100W	Active	100	90435-67003	S14	CITY OF PAWTUCKET
0019	000	1	WEST	AVE	717	Overhead	Distribution	Luminaire	LUM HPS RWY 100W	Active	100	90435-67003	S14	CITY OF PAWTUCKET
0020	000	1	WEST	AVE	717	Overhead	Distribution	Luminaire	LUM HPS RWY 100W	Active	100	90435-67003	S14	CITY OF PAWTUCKET
0021	000	1	WEST	AVE	717	Overhead	Distribution	Luminaire	LUM HPS RWY 100W	Active	100	90435-67003	S14	CITY OF PAWTUCKET
0023	000	1	WEST	AVE	717	Overhead	Distribution	Luminaire	LUM HPS RWY 100W	Active	100	90435-67003	S14	CITY OF PAWTUCKET
0024	000	1	WEST	AVE	717	Overhead	Distribution	Luminaire	LUM HPS RWY 100W	Active	100	90435-67003	S14	CITY OF PAWTUCKET
0024	000	2	WEST	AVE	717	Overhead	Distribution	Luminaire	LUM HPS FLD 400W	Active	400	90435-67003	S14	CITY OF PAWTUCKET
0025	000	1	WEST	AVE	717	Overhead	Distribution	Luminaire	LUM HPS RWY 100W	Active	100	90435-67003	S14	CITY OF PAWTUCKET
0025	000	2	WEST	AVE	717	Overhead	Distribution	Luminaire	LUM HPS FLD 400W	Active	400	90435-67003	S14	CITY OF PAWTUCKET
0026	000	1	WEST	AVE	717	Overhead	Distribution	Luminaire	LUM HPS RWY 100W	Active	100	90435-67003	S14	CITY OF PAWTUCKET
0027	000	1	WEST	AVE	717	Overhead	Distribution	Luminaire	LUM HPS RWY 100W	Active	100	90435-67003	S14	CITY OF PAWTUCKET
0028	000	1	WEST	AVE	717	Overhead	Distribution	Luminaire	LUM HPS RWY 100W	Active	100	90435-67003	S14	CITY OF PAWTUCKET
0029	000	1	WEST	AVE	717	Overhead	Distribution	Luminaire	LUM HPS RWY 100W	Active	100	90435-67003	S14	CITY OF PAWTUCKET
0031	000	1	WEST	AVE	717	Overhead	Distribution	Luminaire	LUM HPS RWY 100W	Active	100	90435-67003	S14	CITY OF PAWTUCKET
0032	000	1	WEST	AVE	717	Overhead	Distribution	Luminaire	LUM HPS RWY 100W	Active	100	90435-67003	S14	CITY OF PAWTUCKET
0034	000	1	WEST	AVE	717	Overhead	Distribution	Luminaire	LUM HPS RWY 100W	Active	100	90435-67003	S14	CITY OF PAWTUCKET
0035	000	1	WEST	AVE	717	Overhead	Distribution	Luminaire	LUM HPS RWY 100W	Active	100	90435-67003	S14	CITY OF PAWTUCKET
0037	000	1	WEST	AVE	717	Overhead	Distribution	Luminaire	LUM HPS RWY 100W	Active	100	90435-67003	S14	CITY OF PAWTUCKET
0039	000	1	WEST	AVE	717	Overhead	Distribution	Luminaire	LUM HPS RWY 100W	Active	100	90435-67003	S14	CITY OF PAWTUCKET
0040	000	1	WEST	AVE	717	Overhead	Distribution	Luminaire	LUM HPS RWY 100W	Active	100	90435-67003	S14	CITY OF PAWTUCKET
0042	000	1	WEST	AVE	717	Overhead	Distribution	Luminaire	LUM HPS RWY 100W	Active	100	90435-67003	S14	CITY OF PAWTUCKET
0044	000	1	WEST	AVE	717	Overhead	Distribution	Luminaire	LUM HPS RWY 100W	Active	100	90435-67003	S14	CITY OF PAWTUCKET
0046	000	1	WEST	AVE	717	Overhead	Distribution	Luminaire	LUM HPS RWY 100W	Active	100	90435-67003	S14	CITY OF PAWTUCKET
0047	000	1	WEST	AVE	717	Overhead	Distribution	Luminaire	LUM HPS RWY 100W	Active	100	90435-67003	S14	CITY OF PAWTUCKET
0048	000	1	WEST	AVE	717	Overhead	Distribution	Luminaire	LUM HPS RWY 100W	Active	100	90435-67003	S14	CITY OF PAWTUCKET
0049	000	1	WEST	AVE	717	Overhead	Distribution	Luminaire	LUM HPS RWY 100W	Active	100	90435-67003	S14	CITY OF PAWTUCKET
0051	000	1	WEST	AVE	717	Overhead	Distribution	Luminaire	LUM HPS RWY 100W	Active	100	90435-67003	S14	CITY OF PAWTUCKET
0052	000	1	WEST	AVE	717	Overhead	Distribution	Luminaire	LUM HPS RWY 100W	Active	100	90435-67003	S14	CITY OF PAWTUCKET
0054	000	1	WEST	AVE	717	Overhead	Distribution	Luminaire	LUM HPS RWY 100W	Active	100	90435-67003	S14	CITY OF PAWTUCKET
0056	000	1	WEST	AVE	717	Overhead	Distribution	Luminaire	LUM HPS RWY 100W	Active	100	90435-67003	S14	CITY OF PAWTUCKET
0057	000	1	WEST	AVE	717	Overhead	Distribution	Luminaire	LUM HPS RWY 100W	Active	100	90435-67003	S14	CITY OF PAWTUCKET
0058	000	1	WEST	AVE	717	Overhead	Distribution	Luminaire	LUM HPS RWY 100W	Active	100	90435-67003	S14	CITY OF PAWTUCKET
0060	000	1	WEST	AVE	717	Overhead	Distribution	Luminaire	LUM HPS RWY 100W	Active	100	90435-67003	S14	CITY OF PAWTUCKET
0062	000	1	WEST	AVE	717	Overhead	Distribution	Luminaire	LUM HPS RWY 100W	Active	100	90435-67003	S14	CITY OF PAWTUCKET
0063	000	1	WEST	AVE	717	Overhead	Distribution	Luminaire	LUM HPS RWY 100W	Active	100	90435-67003	S14	CITY OF PAWTUCKET
0065	000	1	WEST	AVE	717	Overhead	Distribution	Luminaire	LUM HPS RWY 100W	Active	100	90435-67003	S14	CITY OF PAWTUCKET
0002	000	1	WEST CARPENTE	ST	754	Overhead	Distribution	Luminaire	LUM HPS RWY 70W	Active	70	90435-67003	S14	CITY OF PAWTUCKET
0003	000	1	WEST CARPENTE	ST	754	Overhead	Distribution	Luminaire	LUM HPS FLD 400W	Active	400	3371-62008	S14	PAWTUCKET HOUSING AUTHORITY

0004	000	1	WEST CARPENTE	ST	754	Overhead	Distribution	Luminaire	LUM HPS FLD 400W	Active	400	3371-62008	S14	PAWTUCKET HOUSING AUTHORITY
0004	000	2	WEST CARPENTE	ST	754	Overhead	Distribution	Luminaire	LUM HPS RWY 70W	Active	70	90435-67003	S14	CITY OF PAWTUCKET
0005	000	1	WEST CARPENTE	ST	754	Overhead	Distribution	Luminaire	LUM HPS FLD 400W	Active	400	3371-62008	S14	PAWTUCKET HOUSING AUTHORITY
0006	000	1	WEST COLE	ST	718	Overhead	Distribution	Luminaire	LUM HPS RWY 70W	Active	70	90435-67003	S14	CITY OF PAWTUCKET
0008	000	1	WEST COLE	ST	718	Overhead	Distribution	Luminaire	LUM HPS RWY 70W	Active	70	90435-67003	S14	CITY OF PAWTUCKET
0010	000	1	WEST COLE	ST	718	Overhead	Distribution	Luminaire	LUM HPS RWY 70W	Active	70	90435-67003	S14	CITY OF PAWTUCKET
0012	000	1	WEST COLE	ST	718	Overhead	Distribution	Luminaire	LUM HPS RWY 70W	Active	70	90435-67003	S14	CITY OF PAWTUCKET
0013	000	1	WEST COLE	ST	718	Overhead	Distribution	Luminaire	LUM HPS RWY 70W	Active	70	90435-67003	S14	CITY OF PAWTUCKET
0008	000	1	WEST CUTE	ST	783	Overhead	Distribution	Luminaire	LUM HPS RWY 70W	Active	70	90435-67003	S14	CITY OF PAWTUCKET
0010	000	1	WEST CUTE	ST	783	Overhead	Distribution	Luminaire	LUM HPS RWY 70W	Active	70	90435-67003	S14	CITY OF PAWTUCKET
0012	000	1	WEST CUTE	ST	783	Overhead	Distribution	Luminaire	LUM HPS RWY 70W	Active	70	90435-67003	S14	CITY OF PAWTUCKET
0002	000	1	WEST FOREST	AVE	719	Overhead	Distribution	Luminaire	LUM HPS RWY 70W	Active	70	90435-67003	S14	CITY OF PAWTUCKET
0003	000	1	WEST FOREST	AVE	6455	Overhead	Streetlighting	Luminaire	LUM HPS RWY 100W	Active	100	90435-67003	S14	CITY OF PAWTUCKET
0004	000	1	WEST FOREST	AVE	719	Overhead	Distribution	Luminaire	LUM HPS RWY 70W	Active	70	90435-67003	S14	CITY OF PAWTUCKET
0006	000	1	WEST FOREST	AVE	719	Overhead	Distribution	Luminaire	LUM HPS RWY 70W	Active	70	90435-67003	S14	CITY OF PAWTUCKET
0007	000	1	WEST FOREST	AVE	719	Overhead	Distribution	Luminaire	LUM HPS RWY 70W	Active	70	90435-67003	S14	CITY OF PAWTUCKET
0009	000	1	WEST FOREST	AVE	719	Overhead	Distribution	Luminaire	LUM HPS RWY 70W	Active	70	90435-67003	S14	CITY OF PAWTUCKET
0011	000	1	WEST FOREST	AVE	719	Overhead	Distribution	Luminaire	LUM HPS RWY 70W	Active	70	90435-67003	S14	CITY OF PAWTUCKET
0013	000	1	WEST FOREST	AVE	719	Overhead	Distribution	Luminaire	LUM HPS RWY 70W	Active	70	90435-67003	S14	CITY OF PAWTUCKET
0003	000	1	WEST LAWN	AVE	720	Overhead	Distribution	Luminaire	LUM HPS RWY 70W	Active	70	90435-67003	S14	CITY OF PAWTUCKET
0005	000	1	WEST LAWN	AVE	720	Overhead	Distribution	Luminaire	LUM HPS RWY 70W	Active	70	90435-67003	S14	CITY OF PAWTUCKET
0008	000	1	WEST LAWN	AVE	720	Overhead	Distribution	Luminaire	LUM HPS RWY 70W	Active	70	90435-67003	S14	CITY OF PAWTUCKET
0010	000	1	WEST LAWN	AVE	720	Overhead	Distribution	Luminaire	LUM HPS RWY 70W	Active	70	90435-67003	S14	CITY OF PAWTUCKET
0012	000	1	WEST LAWN	AVE	720	Overhead	Distribution	Luminaire	LUM HPS RWY 70W	Active	70	90435-67003	S14	CITY OF PAWTUCKET
0014	000	1	WEST LAWN	AVE	720	Overhead	Distribution	Luminaire	LUM HPS RWY 70W	Active	70	90435-67003	S14	CITY OF PAWTUCKET
0016	000	1	WEST LAWN	AVE	720	Overhead	Distribution	Luminaire	LUM HPS RWY 70W	Active	70	90435-67003	S14	CITY OF PAWTUCKET
0001	000	1	WHIPPLE	ST	722	Overhead	Distribution	Luminaire	LUM HPS RWY 70W	Active	70	90435-67003	S14	CITY OF PAWTUCKET
0002	000	1	WHIPPLE	ST	722	Overhead	Distribution	Luminaire	LUM HPS RWY 70W	Active	70	90435-67003	S14	CITY OF PAWTUCKET
0003	000	1	WHIPPLE	ST	722	Overhead	Distribution	Luminaire	LUM HPS RWY 70W	Active	70	90435-67003	S14	CITY OF PAWTUCKET
0004	000	1	WHIPPLE	ST	722	Overhead	Distribution	Luminaire	LUM HPS RWY 70W	Active	70	90435-67003	S14	CITY OF PAWTUCKET
0005	000	1	WHIPPLE	ST	722	Overhead	Distribution	Luminaire	LUM HPS RWY 70W	Active	70	90435-67003	S14	CITY OF PAWTUCKET
0001	000	1	WHIRLAWAY	PL	749	Overhead	Distribution	Luminaire	LUM HPS RWY 70W	Active	70	90435-67003	S14	CITY OF PAWTUCKET
0003	000	1	WHIRLAWAY	PL	749	Overhead	Distribution	Luminaire	LUM HPS RWY 70W	Active	70	90435-67003	S14	CITY OF PAWTUCKET
0005	000	1	WHIRLAWAY	PL	749	Overhead	Distribution	Luminaire	LUM HPS RWY 70W	Active	70	90435-67003	S14	CITY OF PAWTUCKET
0007	000	1	WHIRLAWAY	PL	749	Overhead	Distribution	Luminaire	LUM HPS RWY 70W	Active	70	90435-67003	S14	CITY OF PAWTUCKET
0001	000	1	WHITE	ST	723	Overhead	Distribution	Luminaire	LUM HPS RWY 70W	Active	70	90435-67003	S14	CITY OF PAWTUCKET
0002	000	1	WHITE	ST	723	Overhead	Distribution	Luminaire	LUM HPS RWY 70W	Active	70	90435-67003	S14	CITY OF PAWTUCKET
0003	000	1	WHITE	ST	723	Overhead	Distribution	Luminaire	LUM HPS RWY 70W	Active	70	90435-67003	S14	CITY OF PAWTUCKET
0004	000	1	WHITE	ST	723	Overhead	Distribution	Luminaire	LUM HPS RWY 70W	Active	70	90435-67003	S14	CITY OF PAWTUCKET
0002	000	1	WHITFORD	AVE	724	Overhead	Distribution	Luminaire	LUM HPS RWY 70W	Active	70	90435-67003	S14	CITY OF PAWTUCKET
0004	000	1	WHITFORD	AVE	724	Overhead	Distribution	Luminaire	LUM HPS RWY 70W	Active	70	90435-67003	S14	CITY OF PAWTUCKET
0002	000	1	WHITMAN	ST	725	Overhead	Distribution	Luminaire	LUM HPS RWY 100W	Active	100	90435-67003	S14	CITY OF PAWTUCKET
0004	000	1	WHITMAN	ST	725	Overhead	Distribution	Luminaire	LUM HPS FLD 250W	Active	250	15698-26009	S14	PAWTUCKET SCHOOL DEP
0004	000	2	WHITMAN	ST	725	Overhead	Distribution	Luminaire	LUM HPS RWY 100W	Active	100	90435-67003	S14	CITY OF PAWTUCKET
0005	000	1	WHITMAN	ST	725	Overhead	Distribution	Luminaire	LUM HPS RWY 100W	Active	100	90435-67003	S14	CITY OF PAWTUCKET
0007	000	1	WHITMAN	ST	725	Overhead	Distribution	Luminaire	LUM HPS RWY 100W	Active	100	90435-67003	S14	CITY OF PAWTUCKET
0008	000	1	WHITMAN	ST	725	Overhead	Distribution	Luminaire	LUM HPS RWY 100W	Active	100	90435-67003	S14	CITY OF PAWTUCKET
0011	000	1	WHITMAN	ST	725	Overhead	Distribution	Luminaire	LUM HPS RWY 70W	Active	70	90435-67003	S14	CITY OF PAWTUCKET
0002	000	1	WHITTIER	RD	726	Overhead	Distribution	Luminaire	LUM HPS RWY 70W	Active	70	90435-67003	S14	CITY OF PAWTUCKET
0004	000	1	WHITTIER	RD	726	Overhead	Distribution	Luminaire	LUM HPS RWY 70W	Active	70	90435-67003	S14	CITY OF PAWTUCKET
0006	000	1	WHITTIER	RD	726	Overhead	Distribution	Luminaire	LUM HPS RWY 70W	Active	70	90435-67003	S14	CITY OF PAWTUCKET
0009	000	1	WHITTIER	RD	726	Overhead	Distribution	Luminaire	LUM HPS RWY 70W	Active	70	90435-67003	S14	CITY OF PAWTUCKET
0011	000	1	WHITTIER	RD	726	Overhead	Distribution	Luminaire	LUM HPS RWY 70W	Active	70	90435-67003	S14	CITY OF PAWTUCKET
0012	000	1	WHITTIER	RD	726	Overhead	Distribution	Luminaire	LUM HPS RWY 70W	Active	70	90435-67003	S14	CITY OF PAWTUCKET
0013	000	1	WHITTIER	RD	726	Overhead	Distribution	Luminaire	LUM HPS RWY 70W	Active	70	90435-67003	S14	CITY OF PAWTUCKET
0015	000	1	WHITTIER	RD	726	Overhead	Distribution	Luminaire	LUM HPS RWY 70W	Active	70	90435-67003	S14	CITY OF PAWTUCKET
0017	000	1	WHITTIER	RD	726	Overhead	Distribution	Luminaire	LUM HPS RWY 70W	Active	70	90435-67003	S14	CITY OF PAWTUCKET
0020	000	1	WHITTIER	RD	726	Overhead	Distribution	Luminaire	LUM HPS RWY 70W	Active	70	90435-67003	S14	CITY OF PAWTUCKET
0022	000	1	WHITTIER	RD	726	Overhead	Distribution	Luminaire	LUM HPS RWY 70W	Active	70	90435-67003	S14	CITY OF PAWTUCKET
0001	000	1	WILCOX	AVE	727	Overhead	Distribution	Luminaire	LUM HPS RWY 70W	Active	70	90435-67003	S14	CITY OF PAWTUCKET
0003	000	1	WILCOX	AVE	727	Overhead	Distribution	Luminaire	LUM HPS RWY 70W	Active	70	90435-67003	S14	CITY OF PAWTUCKET
0005	000	1	WILCOX	AVE	727	Overhead	Distribution	Luminaire	LUM HPS RWY 70W	Active	70	90435-67003	S14	CITY OF PAWTUCKET
0007	000	1	WILCOX	AVE	727	Overhead	Distribution	Luminaire	LUM HPS RWY 70W	Active	70	90435-67003	S14	CITY OF PAWTUCKET

0009	000	1	WILCOX	AVE	727	Overhead	Distribution	Luminaire	LUM HPS RWY 70W	Active	70	90435-67003	S14	CITY OF PAWTUCKET
0011	000	1	WILCOX	AVE	727	Overhead	Distribution	Luminaire	LUM HPS RWY 70W	Active	70	90435-67003	S14	CITY OF PAWTUCKET
0012	000	1	WILCOX	AVE	727	Overhead	Distribution	Luminaire	LUM HPS RWY 70W	Active	70	90435-67003	S14	CITY OF PAWTUCKET
0013	000	1	WILCOX	AVE	727	Overhead	Distribution	Luminaire	LUM HPS RWY 70W	Active	70	90435-67003	S14	CITY OF PAWTUCKET
0001	000	1	WILLARD	ST	728	Overhead	Distribution	Luminaire	LUM HPS RWY 70W	Active	70	90435-67003	S14	CITY OF PAWTUCKET
0002	000	1	WILLARD	ST	728	Overhead	Distribution	Luminaire	LUM HPS RWY 70W	Active	70	90435-67003	S14	CITY OF PAWTUCKET
0003	000	1	WILLARD	ST	728	Overhead	Distribution	Luminaire	LUM HPS RWY 70W	Active	70	90435-67003	S14	CITY OF PAWTUCKET
0001	000	1	WILLIAMS	ST	729	Overhead	Distribution	Luminaire	LUM HPS RWY 70W	Active	70	90435-67003	S14	CITY OF PAWTUCKET
0003	000	1	WILLIAMS	ST	729	Overhead	Distribution	Luminaire	LUM HPS RWY 70W	Active	70	90435-67003	S14	CITY OF PAWTUCKET
0002	000	1	WILLINGTON	RD	730	Overhead	Distribution	Luminaire	LUM HPS RWY 70W	Active	70	90435-67003	S14	CITY OF PAWTUCKET
0002	000	1	WILLISTON	WAY	731	Overhead	Distribution	Luminaire	LUM HPS RWY 70W	Active	70	90435-67003	S14	CITY OF PAWTUCKET
0004	000	1	WILLISTON	WAY	731	Overhead	Distribution	Luminaire	LUM HPS RWY 70W	Active	70	90435-67003	S14	CITY OF PAWTUCKET
0006	000	1	WILLISTON	WAY	731	Overhead	Distribution	Luminaire	LUM HPS RWY 70W	Active	70	90435-67003	S14	CITY OF PAWTUCKET
0013	000	1	WILLISTON	WAY	731	Overhead	Distribution	Luminaire	LUM HPS RWY 70W	Active	70	90435-67003	S14	CITY OF PAWTUCKET
0015	000	1	WILLISTON	WAY	731	Overhead	Distribution	Luminaire	LUM HPS RWY 100W	Active	100	90435-67003	S14	CITY OF PAWTUCKET
0016	000	1	WILLISTON	WAY	731	Overhead	Distribution	Luminaire	LUM HPS RWY 70W	Active	70	90435-67003	S14	CITY OF PAWTUCKET
0018	000	1	WILLISTON	WAY	731	Overhead	Distribution	Luminaire	LUM HPS RWY 70W	Active	70	90435-67003	S14	CITY OF PAWTUCKET
0020	000	1	WILLISTON	WAY	731	Overhead	Distribution	Luminaire	LUM HPS RWY 70W	Active	70	90435-67003	S14	CITY OF PAWTUCKET
0023	000	1	WILLISTON	WAY	731	Overhead	Distribution	Luminaire	LUM HPS RWY 70W	Active	70	90435-67003	S14	CITY OF PAWTUCKET
0024	000	1	WILLISTON	WAY	731	Overhead	Distribution	Luminaire	LUM HPS RWY 70W	Active	70	90435-67003	S14	CITY OF PAWTUCKET
0030	000	1	WILLISTON	WAY	731	Overhead	Distribution	Luminaire	LUM HPS RWY 70W	Active	70	90435-67003	S14	CITY OF PAWTUCKET
0032	000	1	WILLISTON	WAY	731	Overhead	Distribution	Luminaire	LUM HPS RWY 70W	Active	70	90435-67003	S14	CITY OF PAWTUCKET
0033	000	1	WILLISTON	WAY	731	Overhead	Distribution	Luminaire	LUM HPS RWY 70W	Active	70	90435-67003	S14	CITY OF PAWTUCKET
0035	000	1	WILLISTON	WAY	731	Overhead	Distribution	Luminaire	LUM HPS RWY 70W	Active	70	90435-67003	S14	CITY OF PAWTUCKET
0037	000	1	WILLISTON	WAY	731	Overhead	Distribution	Luminaire	LUM HPS RWY 70W	Active	70	90435-67003	S14	CITY OF PAWTUCKET
0003	000	1	WILLOW	AVE	732	Overhead	Distribution	Luminaire	LUM HPS RWY 70W	Active	70	90435-67003	S14	CITY OF PAWTUCKET
0002	000	1	WILSON	ST	733	Overhead	Distribution	Luminaire	LUM HPS RWY 70W	Active	70	90435-67003	S14	CITY OF PAWTUCKET
0002	000	1	WILTON	AVE	734	Overhead	Distribution	Luminaire	LUM HPS RWY 70W	Active	70	90435-67003	S14	CITY OF PAWTUCKET
0004	000	1	WILTON	AVE	734	Overhead	Distribution	Luminaire	LUM HPS RWY 70W	Active	70	90435-67003	S14	CITY OF PAWTUCKET
0006	000	1	WILTON	AVE	734	Overhead	Distribution	Luminaire	LUM HPS RWY 70W	Active	70	90435-67003	S14	CITY OF PAWTUCKET
0008	000	1	WILTON	AVE	734	Overhead	Distribution	Luminaire	LUM HPS RWY 70W	Active	70	90435-67003	S14	CITY OF PAWTUCKET
0010	000	1	WILTON	AVE	734	Overhead	Distribution	Luminaire	LUM HPS RWY 70W	Active	70	90435-67003	S14	CITY OF PAWTUCKET
0001	000	1	WINDMILL	ST	735	Overhead	Distribution	Luminaire	LUM HPS RWY 70W	Active	70	90435-67003	S14	CITY OF PAWTUCKET
0001	001	1	WINDMILL	ST	735	Overhead	Distribution	Luminaire	LUM HPS RWY 70W	Active	70	90435-67003	S14	CITY OF PAWTUCKET
0002	000	1	WINDMILL	ST	735	Overhead	Distribution	Luminaire	LUM HPS RWY 70W	Active	70	90435-67003	S14	CITY OF PAWTUCKET
0005	000	1	WINDMILL	ST	735	Overhead	Distribution	Luminaire	LUM HPS RWY 70W	Active	70	90435-67003	S14	CITY OF PAWTUCKET
0007	000	1	WINDMILL	ST	735	Overhead	Distribution	Luminaire	LUM HPS RWY 70W	Active	70	90435-67003	S14	CITY OF PAWTUCKET
0009	000	1	WINDMILL	ST	735	Overhead	Distribution	Luminaire	LUM HPS RWY 70W	Active	70	90435-67003	S14	CITY OF PAWTUCKET
0011	000	1	WINDMILL	ST	735	Overhead	Distribution	Luminaire	LUM HPS RWY 70W	Active	70	90435-67003	S14	CITY OF PAWTUCKET
0012	000	1	WINDMILL	ST	735	Overhead	Distribution	Luminaire	LUM HPS RWY 70W	Active	70	90435-67003	S14	CITY OF PAWTUCKET
0013	000	1	WINDMILL	ST	735	Overhead	Distribution	Luminaire	LUM HPS RWY 70W	Active	70	90435-67003	S14	CITY OF PAWTUCKET
0002	000	1	WINDSOR	CT	736	Overhead	Distribution	Luminaire	LUM HPS RWY 70W	Active	70	90435-67003	S14	CITY OF PAWTUCKET
0004	000	1	WINDSOR	CT	736	Overhead	Distribution	Luminaire	LUM HPS RWY 70W	Active	70	90435-67003	S14	CITY OF PAWTUCKET
0005	000	1	WINDSOR	RD	737	Overhead	Distribution	Luminaire	LUM HPS RWY 70W	Active	70	90435-67003	S14	CITY OF PAWTUCKET
0006	000	1	WINDSOR	CT	736	Overhead	Distribution	Luminaire	LUM HPS RWY 70W	Active	70	90435-67003	S14	CITY OF PAWTUCKET
0007	000	1	WINDSOR	RD	737	Overhead	Distribution	Luminaire	LUM HPS RWY 100W	Active	100	90435-67003	S14	CITY OF PAWTUCKET
0007	001	1	WINDSOR	RD	737	Overhead	Distribution	Luminaire	LUM HPS RWY 70W	Active	70	90435-67003	S14	CITY OF PAWTUCKET
0008	000	1	WINDSOR	CT	736	Overhead	Distribution	Luminaire	LUM HPS RWY 70W	Active	70	90435-67003	S14	CITY OF PAWTUCKET
0009	000	1	WINDSOR	RD	737	Overhead	Distribution	Luminaire	LUM HPS RWY 70W	Active	70	90435-67003	S14	CITY OF PAWTUCKET
0011	000	1	WINDSOR	RD	737	Overhead	Distribution	Luminaire	LUM HPS RWY 70W	Active	70	90435-67003	S14	CITY OF PAWTUCKET
0012	001	1	WINDSOR	RD	737	Overhead	Distribution	Luminaire	LUM HPS RWY 70W	Active	70	90435-67003	S14	CITY OF PAWTUCKET
0013	000	1	WINDSOR	RD	737	Overhead	Distribution	Luminaire	LUM HPS RWY 70W	Active	70	90435-67003	S14	CITY OF PAWTUCKET
0006	000	1	WINTHROP	AVE	738	Overhead	Distribution	Luminaire	LUM HPS RWY 70W	Active	70	90435-67003	S14	CITY OF PAWTUCKET
0008	000	1	WINTHROP	AVE	738	Overhead	Distribution	Luminaire	LUM HPS RWY 70W	Active	70	90435-67003	S14	CITY OF PAWTUCKET
0003	000	1	WOOD	ST	739	Overhead	Distribution	Luminaire	LUM HPS RWY 70W	Active	70	90435-67003	S14	CITY OF PAWTUCKET
0005	000	1	WOOD	ST	739	Overhead	Distribution	Luminaire	LUM HPS RWY 70W	Active	70	90435-67003	S14	CITY OF PAWTUCKET
0008	000	1	WOOD	ST	739	Overhead	Distribution	Luminaire	LUM HPS RWY 70W	Active	70	90435-67003	S14	CITY OF PAWTUCKET
0009	000	1	WOOD	ST	739	Overhead	Distribution	Luminaire	LUM HPS RWY 70W	Active	70	90435-67003	S14	CITY OF PAWTUCKET
0010	000	1	WOOD	ST	739	Overhead	Distribution	Luminaire	LUM HPS RWY 70W	Active	70	90435-67003	S14	CITY OF PAWTUCKET
0002	000	1	WOODBINE	ST	740	Overhead	Distribution	Luminaire	LUM HPS RWY 70W	Active	70	90435-67003	S14	CITY OF PAWTUCKET
0003	000	1	WOODBINE	ST	740	Overhead	Distribution	Luminaire	LUM HPS RWY 70W	Active	70	90435-67003	S14	CITY OF PAWTUCKET
0004	000	1	WOODBINE	ST	740	Overhead	Distribution	Luminaire	LUM HPS RWY 70W	Active	70	90435-67003	S14	CITY OF PAWTUCKET
0005	000	1	WOODBINE	ST	740	Overhead	Distribution	Luminaire	LUM HPS RWY 70W	Active	70	90435-67003	S14	CITY OF PAWTUCKET

0009	000	1	WOODBINE	ST	740	Overhead	Distribution	Luminaire	LUM HPS RWY 70W	Active	70	90435-67003	S14	CITY OF PAWTUCKET
0009	000	2	WOODBINE	ST	740	Overhead	Distribution	Luminaire	LUM HPS FLD 400W	Active	400	90435-67003	S14	CITY OF PAWTUCKET
0009	000	3	WOODBINE	ST	740	Overhead	Distribution	Luminaire	LUM HPS FLD 400W	Active	400	90435-67003	S14	CITY OF PAWTUCKET
0010	000	1	WOODBINE	ST	740	Overhead	Distribution	Luminaire	LUM HPS RWY 100W	Active	100	90435-67003	S14	CITY OF PAWTUCKET
0013	000	1	WOODBINE	ST	740	Overhead	Distribution	Luminaire	LUM HPS RWY 70W	Active	70	90435-67003	S14	CITY OF PAWTUCKET
0015	000	1	WOODBINE	ST	740	Overhead	Distribution	Luminaire	LUM HPS FLD 250W	Active	250	90435-65009	S14	PAWTUCKET SCHOOL DEP
0015	000	2	WOODBINE	ST	740	Overhead	Distribution	Luminaire	LUM HPS RWY 70W	Active	70	90435-67003	S14	CITY OF PAWTUCKET
0016	000	1	WOODBINE	ST	740	Overhead	Distribution	Luminaire	LUM HPS FLD 250W	Active	250	90435-65009	S14	PAWTUCKET SCHOOL DEP
0017	000	1	WOODBINE	ST	740	Overhead	Distribution	Luminaire	LUM HPS RWY 70W	Active	70	90435-67003	S14	CITY OF PAWTUCKET
0017	001	1	WOODBINE	ST	740	Overhead	Distribution	Luminaire	LUM HPS FLD 250W	Active	250	90435-65009	S14	PAWTUCKET SCHOOL DEP
0019	000	1	WOODBINE	ST	740	Overhead	Distribution	Luminaire	LUM HPS RWY 70W	Active	70	90435-67003	S14	CITY OF PAWTUCKET
0021	000	1	WOODBINE	ST	740	Overhead	Distribution	Luminaire	LUM HPS RWY 70W	Active	70	90435-67003	S14	CITY OF PAWTUCKET
0022	000	1	WOODBINE	ST	740	Overhead	Distribution	Luminaire	LUM HPS RWY 70W	Active	70	90435-67003	S14	CITY OF PAWTUCKET
0025	000	1	WOODBINE	ST	740	Overhead	Distribution	Luminaire	LUM HPS RWY 70W	Active	70	90435-67003	S14	CITY OF PAWTUCKET
0007	000	1	WOODBURY	ST	741	Overhead	Distribution	Luminaire	LUM HPS RWY 70W	Active	70	90435-67003	S14	CITY OF PAWTUCKET
0009	000	1	WOODBURY	ST	741	Overhead	Distribution	Luminaire	LUM HPS RWY 70W	Active	70	90435-67003	S14	CITY OF PAWTUCKET
0011	000	1	WOODBURY	ST	741	Overhead	Distribution	Luminaire	LUM HPS RWY 70W	Active	70	90435-67003	S14	CITY OF PAWTUCKET
0014	000	1	WOODBURY	ST	741	Overhead	Distribution	Luminaire	LUM HPS RWY 70W	Active	70	90435-67003	S14	CITY OF PAWTUCKET
0016	000	1	WOODBURY	ST	741	Overhead	Distribution	Luminaire	LUM HPS RWY 70W	Active	70	90435-67003	S14	CITY OF PAWTUCKET
0018	000	1	WOODBURY	ST	741	Overhead	Distribution	Luminaire	LUM HPS RWY 70W	Active	70	90435-67003	S14	CITY OF PAWTUCKET
0020	000	1	WOODBURY	ST	741	Overhead	Distribution	Luminaire	LUM HPS RWY 70W	Active	70	90435-67003	S14	CITY OF PAWTUCKET
0001	000	1	WOODHAVEN	RD	742	Overhead	Distribution	Luminaire	LUM HPS RWY 70W	Active	70	90435-67003	S14	CITY OF PAWTUCKET
0003	000	1	WOODHAVEN	RD	742	Overhead	Distribution	Luminaire	LUM HPS RWY 70W	Active	70	90435-67003	S14	CITY OF PAWTUCKET
0005	000	1	WOODHAVEN	RD	742	Overhead	Distribution	Luminaire	LUM HPS RWY 70W	Active	70	90435-67003	S14	CITY OF PAWTUCKET
0007	000	1	WOODHAVEN	RD	742	Overhead	Distribution	Luminaire	LUM HPS RWY 70W	Active	70	90435-67003	S14	CITY OF PAWTUCKET
0009	000	1	WOODHAVEN	RD	742	Overhead	Distribution	Luminaire	LUM HPS RWY 70W	Active	70	90435-67003	S14	CITY OF PAWTUCKET
0010	000	1	WOODHAVEN	RD	742	Overhead	Distribution	Luminaire	LUM HPS RWY 70W	Active	70	90435-67003	S14	CITY OF PAWTUCKET
0011	000	1	WOODHAVEN	RD	742	Overhead	Distribution	Luminaire	LUM HPS RWY 70W	Active	70	90435-67003	S14	CITY OF PAWTUCKET
0013	000	1	WOODHAVEN	RD	742	Overhead	Distribution	Luminaire	LUM HPS RWY 70W	Active	70	90435-67003	S14	CITY OF PAWTUCKET
0015	000	1	WOODHAVEN	RD	742	Overhead	Distribution	Luminaire	LUM HPS RWY 70W	Active	70	90435-67003	S14	CITY OF PAWTUCKET
0017	000	1	WOODHAVEN	RD	742	Overhead	Distribution	Luminaire	LUM HPS RWY 70W	Active	70	90435-67003	S14	CITY OF PAWTUCKET
0018	000	1	WOODHAVEN	RD	742	Overhead	Distribution	Luminaire	LUM HPS RWY 70W	Active	70	90435-67003	S14	CITY OF PAWTUCKET
0020	000	1	WOODHAVEN	RD	742	Overhead	Distribution	Luminaire	LUM HPS RWY 70W	Active	70	90435-67003	S14	CITY OF PAWTUCKET
0024	000	1	WOODHAVEN	RD	742	Overhead	Distribution	Luminaire	LUM HPS RWY 70W	Active	70	90435-67003	S14	CITY OF PAWTUCKET
0026	000	1	WOODHAVEN	RD	742	Overhead	Distribution	Luminaire	LUM HPS RWY 70W	Active	70	90435-67003	S14	CITY OF PAWTUCKET
0029	000	1	WOODHAVEN	RD	742	Overhead	Distribution	Luminaire	LUM HPS RWY 70W	Active	70	90435-67003	S14	CITY OF PAWTUCKET
0032	000	1	WOODHAVEN	RD	742	Overhead	Distribution	Luminaire	LUM HPS RWY 70W	Active	70	90435-67003	S14	CITY OF PAWTUCKET
0034	000	1	WOODHAVEN	RD	742	Overhead	Distribution	Luminaire	LUM HPS RWY 70W	Active	70	90435-67003	S14	CITY OF PAWTUCKET
0001	000	1	WOODLAND	ST	743	Overhead	Distribution	Luminaire	LUM HPS RWY 70W	Active	70	90435-67003	S14	CITY OF PAWTUCKET
0002	000	1	WOODLAND	ST	743	Overhead	Distribution	Luminaire	LUM HPS RWY 70W	Active	70	90435-67003	S14	CITY OF PAWTUCKET
0004	000	1	WOODLAND	ST	743	Overhead	Distribution	Luminaire	LUM HPS RWY 70W	Active	70	90435-67003	S14	CITY OF PAWTUCKET
0002	001	1	WOODLAWN	AVE	744	Overhead	Distribution	Luminaire	LUM HPS RWY 70W	Active	70	90435-67003	S14	CITY OF PAWTUCKET
0004	000	1	WOODLAWN	AVE	744	Overhead	Distribution	Luminaire	LUM HPS RWY 70W	Active	70	90435-67003	S14	CITY OF PAWTUCKET
0002	000	1	WOODSIDE	AVE	745	Overhead	Distribution	Luminaire	LUM HPS RWY 100W	Active	100	90435-67003	S14	CITY OF PAWTUCKET
0005	000	1	WOODSIDE	AVE	745	Overhead	Distribution	Luminaire	LUM HPS RWY 250W	Active	250	90435-67003	S14	CITY OF PAWTUCKET
0008	000	1	WOODSIDE	AVE	745	Overhead	Distribution	Luminaire	LUM HPS RWY 100W	Active	100	90435-67003	S14	CITY OF PAWTUCKET
0010	000	1	WOODSIDE	AVE	745	Overhead	Distribution	Luminaire	LUM HPS RWY 70W	Active	70	90435-67003	S14	CITY OF PAWTUCKET
0002	000	1	YALE	AVE	746	Overhead	Distribution	Luminaire	LUM HPS RWY 70W	Active	70	90435-67003	S14	CITY OF PAWTUCKET
0004	000	1	YALE	AVE	746	Overhead	Distribution	Luminaire	LUM HPS RWY 70W	Active	70	90435-67003	S14	CITY OF PAWTUCKET
0001	000	1	YORK	AVE	747	Overhead	Distribution	Luminaire	LUM HPS RWY 100W	Active	100	90435-67003	S14	CITY OF PAWTUCKET
0002	000	1	YORK	AVE	747	Overhead	Distribution	Luminaire	LUM HPS RWY 100W	Active	100	90435-67003	S14	CITY OF PAWTUCKET
0005	000	1	YORK	AVE	747	Overhead	Distribution	Luminaire	LUM HPS RWY 100W	Active	100	90435-67003	S14	CITY OF PAWTUCKET
0007	000	1	YORK	AVE	747	Overhead	Distribution	Luminaire	LUM HPS RWY 100W	Active	100	90435-67003	S14	CITY OF PAWTUCKET
0010	000	1	YORK	AVE	747	Overhead	Distribution	Luminaire	LUM HPS RWY 100W	Active	100	90435-67003	S14	CITY OF PAWTUCKET
0012	000	1	YORK	AVE	747	Overhead	Distribution	Luminaire	LUM HPS RWY 100W	Active	100	90435-67003	S14	CITY OF PAWTUCKET
0014	000	1	YORK	AVE	747	Overhead	Distribution	Luminaire	LUM HPS RWY 100W	Active	100	90435-67003	S14	CITY OF PAWTUCKET
0016	000	1	YORK	AVE	747	Overhead	Distribution	Luminaire	LUM HPS RWY 70W	Active	70	90435-67003	S14	CITY OF PAWTUCKET
0017	000	1	YORK	AVE	747	Overhead	Distribution	Luminaire	LUM HPS RWY 70W	Active	70	90435-67003	S14	CITY OF PAWTUCKET
0020	000	1	YORK	AVE	747	Overhead	Distribution	Luminaire	LUM HPS RWY 100W	Active	100	90435-67003	S14	CITY OF PAWTUCKET
0022	000	1	YORK	AVE	747	Overhead	Distribution	Luminaire	LUM HPS RWY 100W	Active	100	90435-67003	S14	CITY OF PAWTUCKET
0025	000	1	YORK	AVE	747	Overhead	Distribution	Luminaire	LUM HPS RWY 100W	Active	100	90435-67003	S14	CITY OF PAWTUCKET
0027	000	1	YORK	AVE	747	Overhead	Distribution	Luminaire	LUM HPS RWY 70W	Active	70	90435-67003	S14	CITY OF PAWTUCKET
0027	030	1	YORK	AVE	747	Overhead	Distribution	Luminaire	LUM HPS RWY 70W	Active	70	90435-67003	S14	CITY OF PAWTUCKET

0028	000	1	YORK	AVE	747	Overhead	Distribution	Luminaire	LUM HPS RWY 100W	Active	100	90435-67003	S14	CITY OF PAWTUCKET
0031	000	1	YORK	AVE	747	Overhead	Distribution	Luminaire	LUM HPS RWY 100W	Active	100	90435-67003	S14	CITY OF PAWTUCKET
0033	000	1	YORK	AVE	747	Overhead	Distribution	Luminaire	LUM HPS RWY 100W	Active	100	90435-67003	S14	CITY OF PAWTUCKET
0035	000	1	YORK	AVE	747	Overhead	Distribution	Luminaire	LUM HPS RWY 100W	Active	100	90435-67003	S14	CITY OF PAWTUCKET
0038	000	1	YORK	AVE	747	Overhead	Distribution	Luminaire	LUM HPS RWY 100W	Active	100	90435-67003	S14	CITY OF PAWTUCKET
0039	000	1	YORK	AVE	747	Overhead	Distribution	Luminaire	LUM HPS RWY 100W	Active	100	90435-67003	S14	CITY OF PAWTUCKET
0043	000	1	YORK	AVE	747	Overhead	Distribution	Luminaire	LUM HPS RWY 100W	Active	100	90435-67003	S14	CITY OF PAWTUCKET
0047	000	1	YORK	AVE	747	Overhead	Distribution	Luminaire	LUM HPS RWY 100W	Active	100	90435-67003	S14	CITY OF PAWTUCKET
0049	000	1	YORK	AVE	747	Overhead	Distribution	Luminaire	LUM HPS RWY 100W	Active	100	90435-67003	S14	CITY OF PAWTUCKET
0052	000	1	YORK	AVE	747	Overhead	Distribution	Luminaire	LUM HPS RWY 100W	Active	100	90435-67003	S14	CITY OF PAWTUCKET
0054	000	1	YORK	AVE	747	Overhead	Distribution	Luminaire	LUM HPS RWY 100W	Active	100	90435-67003	S14	CITY OF PAWTUCKET
0057	000	1	YORK	AVE	747	Overhead	Distribution	Luminaire	LUM HPS RWY 100W	Active	100	90435-67003	S14	CITY OF PAWTUCKET
0059	001	1	YORK	AVE	747	Overhead	Distribution	Luminaire	LUM HPS RWY 70W	Active	70	90435-67003	S14	CITY OF PAWTUCKET
0060	001	1	YORK	AVE	747	Overhead	Distribution	Luminaire	LUM HPS RWY 100W	Active	100	90435-67003	S14	CITY OF PAWTUCKET
0062	001	1	YORK	AVE	747	Overhead	Distribution	Luminaire	LUM HPS RWY 70W	Active	70	90435-67003	S14	CITY OF PAWTUCKET
0064	000	1	YORK	AVE	747	Overhead	Distribution	Luminaire	LUM HPS RWY 100W	Active	100	90435-67003	S14	CITY OF PAWTUCKET
0065	000	1	YORK	AVE	747	Overhead	Distribution	Luminaire	LUM HPS RWY 100W	Active	100	90435-67003	S14	CITY OF PAWTUCKET
0067	000	1	YORK	AVE	747	Overhead	Distribution	Luminaire	LUM HPS RWY 100W	Active	100	90435-67003	S14	CITY OF PAWTUCKET
0070	000	1	YORK	AVE	747	Overhead	Distribution	Luminaire	LUM HPS RWY 100W	Active	100	90435-67003	S14	CITY OF PAWTUCKET
0072	000	1	YORK	AVE	747	Overhead	Distribution	Luminaire	LUM HPS RWY 70W	Active	70	90435-67003	S14	CITY OF PAWTUCKET
0074	000	1	YORK	AVE	747	Overhead	Distribution	Luminaire	LUM HPS RWY 100W	Active	100	90435-67003	S14	CITY OF PAWTUCKET
0076	000	1	YORK	AVE	747	Overhead	Distribution	Luminaire	LUM HPS RWY 100W	Active	100	90435-67003	S14	CITY OF PAWTUCKET
0078	000	1	YORK	AVE	747	Overhead	Distribution	Luminaire	LUM HPS RWY 100W	Active	100	90435-67003	S14	CITY OF PAWTUCKET
0081	000	1	YORK	AVE	747	Overhead	Distribution	Luminaire	LUM HPS RWY 100W	Active	100	90435-67003	S14	CITY OF PAWTUCKET
0082	000	1	YORK	AVE	747	Overhead	Distribution	Luminaire	LUM HPS RWY 100W	Active	100	90435-67003	S14	CITY OF PAWTUCKET
0083	000	1	YORK	AVE	747	Overhead	Distribution	Luminaire	LUM HPS RWY 100W	Active	100	90435-67003	S14	CITY OF PAWTUCKET
0085	000	1	YORK	AVE	747	Overhead	Distribution	Luminaire	LUM HPS RWY 100W	Active	100	90435-67003	S14	CITY OF PAWTUCKET
0086	000	1	YORK	AVE	747	Overhead	Distribution	Luminaire	LUM HPS RWY 100W	Active	100	90435-67003	S14	CITY OF PAWTUCKET
0088	000	1	YORK	AVE	747	Overhead	Distribution	Luminaire	LUM HPS RWY 100W	Active	100	90435-67003	S14	CITY OF PAWTUCKET
0091	000	1	YORK	AVE	747	Overhead	Distribution	Luminaire	LUM HPS RWY 100W	Active	100	90435-67003	S14	CITY OF PAWTUCKET
0092	000	1	YORK	AVE	747	Overhead	Distribution	Luminaire	LUM HPS RWY 100W	Active	100	90435-67003	S14	CITY OF PAWTUCKET
0094	000	1	YORK	AVE	747	Overhead	Distribution	Luminaire	LUM HPS RWY 70W	Active	70	90435-67003	S14	CITY OF PAWTUCKET
0095	000	1	YORK	AVE	747	Overhead	Distribution	Luminaire	LUM HPS RWY 100W	Active	100	90435-67003	S14	CITY OF PAWTUCKET
0098	000	1	YORK	AVE	747	Overhead	Distribution	Luminaire	LUM HPS RWY 100W	Active	100	90435-67003	S14	CITY OF PAWTUCKET
0099	000	1	YORK	AVE	747	Overhead	Distribution	Luminaire	LUM HPS RWY 250W	Active	250	90435-67003	S14	CITY OF PAWTUCKET
0101	000	1	YORK	AVE	747	Overhead	Distribution	Luminaire	LUM HPS RWY 250W	Active	250	90435-67003	S14	CITY OF PAWTUCKET
0103	000	1	YORK	AVE	747	Overhead	Distribution	Luminaire	LUM HPS RWY 250W	Active	250	90435-67003	S14	CITY OF PAWTUCKET
0104	000	1	YORK	AVE	747	Overhead	Distribution	Luminaire	LUM HPS RWY 70W	Active	70	90435-67003	S14	CITY OF PAWTUCKET
0105	000	1	YORK	AVE	747	Overhead	Distribution	Luminaire	LUM HPS RWY 250W	Active	250	90435-67003	S14	CITY OF PAWTUCKET
0001	000	1	YOUNG	ST	748	Overhead	Distribution	Luminaire	LUM HPS RWY 70W	Active	70	90435-67003	S14	CITY OF PAWTUCKET
0003	000	1	YOUNG	ST	748	Overhead	Distribution	Luminaire	LUM HPS RWY 70W	Active	70	90435-67003	S14	CITY OF PAWTUCKET
0007	000	1	YOUNG	ST	748	Overhead	Distribution	Luminaire	LUM HPS RWY 70W	Active	70	90435-67003	S14	CITY OF PAWTUCKET
0009	000	1	YOUNG	ST	748	Overhead	Distribution	Luminaire	LUM HPS RWY 70W	Active	70	90435-67003	S14	CITY OF PAWTUCKET
0012	000	1	YOUNG	ST	748	Overhead	Distribution	Luminaire	LUM HPS RWY 70W	Active	70	90435-67003	S14	CITY OF PAWTUCKET

Appendix G2

Antique Light Posts

F:\Antique Light Inventory

Location	Voltage	Wattage (bulb)	Type of Actuation	Posts	Lamps	Power Source Ref.	Note(s)
Armistice Blvd. / Spring St. / Grove St.	208 V	150W HPS	Photo Sensor @ Power Supply	45	45	(A)	
Broad St.	208 V	150W HPS	Photo Sensor @ Power Supply	5	5	(B)	
Broadway (lower)	208 V	150W HPS	Photo Sensor on every Post	4	4	(K)	
Division St Bridge	208 V	150W HPS	Photo Sensor on every Post	18	18	(H)	
Exchange St.	208 V	150W HPS	Timer @ Power Supply	12	15	(C)	2
Hodgsons Park (including wall & steps)	208 V	150W HPS	Timer @ Power Supply	20	36	(F)	1
Main St. (Dexter to Roosevelt)	208 V	150W HPS	Photo Sensor @ Power Supply	28	28	(B)	
Main St. (Roosevelt to School)	208 V	150W HPS	Photo Sensor on every Post	11	14	(K)	3
Maple St.	208 V	150W HPS	Photo Sensor @ Power Supply	2	2	(B)	
North Union St.	208 V	150W HPS	Photo Sensor @ Power Supply	5	5	(B)	
Roosevelt Ave. (Main to Exchange)	208 V	150W HPS	Photo Sensor @ Power Supply	23	23	(E)	
Santos Park	120 V	175 W MH	Photo Sensor on every Post	5	5	(L)	
Slater Park (Carousel & Street)	208 V	150 W HPS	Photo Sensor @ Power Supply	17	17	(J)	
Slater Park (Path behind Boat House)	208 V	90 W HPS	Photo Sensor on every Post	5	5	(I)	
Taft St. (Marina)	120 V	150 W HPS	Timer @ Power Supply	3	3	(G)	
Veterans Memorial (City Hall)	208 V	150 W HPS	Timer @ Power Supply	2	2	(C)	
Walcott St.	208 V	150 W HPS	Timer w/ Photo Sensor@ Power Supply	22	22	(D)	
Walcott St. @ Walnut St.	208 V	70 W HPS	Timer w/ Photo Sensor@ Power Supply	1	1	(D)	
Total(s)				228	250		

AC Power Source Location

(A) Spring St. @ Grove St.
(B) Main St. Parking Garage
(C) City Hall Fire Dept. stairwell closet
(D) Walcott St. (between Walnut & Maynard)
(E) Roosevelt @ Exchange
(F) Hodgson Park (next to Wilkinson Mill)
(G) Taft St. Marina (Park Area)
(H) Division St. (NE side of bridge)
(I) Boat House
(J) Carousel
(K) National Grid (direct)
(L) Lonsdale Ave.

Note(s)

1) 4 Light Posts have (5) Luminaires on single Post.
2) 1 Light Post has (4) Luminaires on a single Post.
3) I Light Post has (4) Luminaires on a single Post.

As described in RFP 16-019, Bidders may submit up to two (2) price proposals representing two (2) equipment options for the LED conversion; up to two (2) options for smart controls; and one (1) price for long life photocells. In all cases, Option 1 shall be the Bidders preferred option.

The bidder shall specify bid price in both words and figures. All words and figures shall be in ink or typed. In case of a discrepancy between the written words and those in figures, the written word shall govern.

All equipment specified in Option 1 and Option 2 shall meet the eligibility requirements for National Grid and the Office of Energy Resources equipment incentives as well as meet the specifications defined in

Quotes for materials for additional streetlights to be provided by the Contractor during the contract period upon request and specified by the City. Cost of materials subject to a maximum mark-up of 10%.

Having examined RFP # 16-019, we propose to enter into a contract to perform services per the bid specifications for the costs listed herein:

Name of Proposer: _____
Date: _____
Address: _____
Authorized Signature: _____
Print Name and Title: _____

Services, the undersigned, unless explicitly noted, hereby offers to furnish Labor and Materials as follows. Base Bid pricing shall include all costs to complete each streetlight installation including but not limited to removal and disposal of existing units, installation of LED luminaires with in-line fuse, and any other incidental work. Pricing offered must be inclusive of all costs to complete all work as required under the Price Agreement, including but not limited to material costs, labor costs, overhead costs, cost of providing lighting pilot, inventory development, testing, transportation, arrow board, signs, branch trimming as needed, software, reporting, fees, etc. Proposal shall also include a separate line item for pricing of smart controls (up to two options), installed concurrently with the LED lighting installation and a photocell alternative as specified in the RFP.

- Pricing proposed or negotiated will be incorporated into the awarded Price Agreement.
- The City does not pay any taxes; therefore, do not include taxes in your pricing.

Please complete all sections.

A1: Base Bid: Pricing for Overhead Streetlights, Installed: Proposed New LED Luminaires (including In-Line Fuses)

Proposed LED Luminaires: Overhead (Installed)*

Item No.	Existing Fixture	Description (incl. wattage)	Manufacturer	Model #	Manufact. Warranty (Years)	Est. Total Qty.	Unit	Unit Price	Extended Price
1	250W HPS Flood					73	Each	$	$
2	400W HPS Flood					119	Each	$	$
3	50W HPS Roadway					37	Each	$	$
4	70W HPS Roadway					3138	Each	$	$
5	100W HPS Roadway					1439	Each	$	$
6	100W HPS Roadway - TW					2	Each	$	$
7	250W HPS Roadway					986	Each	$	$
8	250W HPS Roadway - TW					12	Each	$	$
9	400W HPS Roadway					6	Each	$	$
10	400W HPS Roadway - TW					2	Each	$	$
11	100W Mercury Vapor Roadway					1	Each	$	$
12	175W Mercury Vapor Roadway					15	Each	$	$
13	400W Mercury Vapor Roadway					4	Each	$	$
						5834			

*Pricing shall include all costs related to installation, including in-line fuse (labor and materials).

A2: Base Bid: Pricing for Decorative Streetlights, Installed: Proposed LED Retrofit

Proposed LED Retrofit: Decorative Streetlights (Installed)*

Item No.	Existing Fixture	Description (incl. wattage)	Manufacturer	Model #	Manufact. Warranty (Years)	Est. Total Qty.	Unit	Unit Price	Extended Price
14	150W HPS Roadway Post Top (Decorative)					217	Each	$	$
15	70W HPS Post Top (Decorative)					1	Each	$	$
16	90W HPS Post Top (Decorative)					5	Each	$	$
17	175W HPS Post Top (Decorative)					5	Each	$	$

A3: Unit Pricing: Overhead Streetlights: Pricing for #10 AWG Wiring Installation (where required)

Item No.	Existing Fixture	Item	Unit	Per-Unit Price Adjustment

18	N/A	Flat fee: #10 AWG Wiring Installation (time and materials) where existing street light conductors or circuits are insufficient	Each, as required	$

A OPTION: LED STREETLIGHTS, INSTALLED: OVERHEAD AND DECORATIVE

TOTAL BASE BID (PROPOSAL #___ of ___):

Enter Total: $

In Words:

Authorized Signature:

Date:

B1: Base Bid: Pricing for Overhead Streetlights, Installed: Proposed New LED Luminaires (including In-Line Fuses)

Proposed LED Luminaires: Overhead (Installed)*

Item No.	Existing Fixture	Description (incl. wattage)	Manufacturer	Model #	Manufact. Warranty (Years)	Est. Total Qty.	Unit	Unit Price	Extended Price
1	250W HPS Flood					73	Each	$	$
2	400W HPS Flood					119	Each	$	$
3	50W HPS Roadway					37	Each	$	$
4	70W HPS Roadway					3138	Each	$	$
5	100W HPS Roadway					1439	Each	$	$
6	100W HPS Roadway - TW					2	Each	$	$
7	250W HPS Roadway					986	Each	$	$
8	250W HPS Roadway - TW					12	Each	$	$

9	400W HPS Roadway					6	Each	$	$
10	400W HPS Roadway - TW					2	Each	$	$
11	100W Mercury Vapor Roadway					1	Each	$	$
12	175W Mercury Vapor Roadway					15	Each	$	$
13	400W Mercury Vapor Roadway					4	Each	$	$
						5834			

*Pricing shall include all costs related to installation, including in-line fuse (labor and materials).

B2: Base Bid: Pricing for Decorative Streetlights, Installed: Proposed LED Retrofit

Proposed LED Retrofit: Decorative Streetlights (Installed)*

Item No.	Existing Fixture	Description (incl. wattage)	Manufacturer	Model #	Manufact. Warranty (Years)	Est. Total Qty.	Unit	Unit Price	Extended Price
14	150W HPS Roadway Post Top (Decorative)					217	Each	$	$
15	70W HPS Post Top (Decorative)					1	Each	$	$
16	90W HPS Post Top (Decorative)					5	Each	$	$
17	175W HPS Post Top (Decorative)					5	Each	$	$

B3: Unit Pricing: Overhead Streetlights: Pricing for #10 AWG Wiring Installation (where required)

Item No.	Existing Fixture	Item	Unit	Per-Unit Price Adjustment
18	N/A	Flat fee: #10 AWG Wiring Installation (time and materials) where existing street light conductors or circuits are insufficient	Each, as required	$

B OPTION: LED STREETLIGHTS, INSTALLED: OVERHEAD AND

TOTAL BASE BID (PROPOSAL #___ of ___):

Enter Total: $ _____

In Words: _____

Authorized Signature: _____

Date: _____

Please complete all sections.

Controls Option A: Unit Pricing - Add-Alternate: Pricing for Smart Controls for Overhead Streetlights (Installed)

Propose up to two options for controls to be installed concurrently with items from previous tab

Item No.	Existing Fixture	Item	Proposed Control (Include Manufacturer, Model #)	Qty.	Unit	Unit Price	Extended Price
2a	N/A	Smart Controls: Overhead (option 1)			Each	$	$
2b	N/A	Smart Controls: Overhead (option 2)			Each	$	$

Controls Option B: Unit Pricing - Add-Alternate: Pricing for Smart Controls for Decorative Streetlights (Installed)

Propose up to two options for controls to be installed concurrently with items from previous tab

Item No.	Existing Fixture	Item	Proposed Materials (Include Manufacturer, Model #)	Qty.	Unit	Unit Price	Extended Price
3a	N/A	Smart Controls: Decorative Lights (option 1)			Each	$	$
3b	N/A	Smart Controls: Decorative Lights (option 2)			Each	$	$

Controls Photocell Option: Unit Pricing - Add-Alternate: Pricing for Photocells

Propose up to two options for controls to be installed concurrently with items from previous tab

Item No.	Existing Fixture	Item	Proposed Control (Include Manufacturer, Model #)	Qty.	Unit	Unit Price	Extended Price
1a	N/A	Photocells (option 1)			Each	$	$
1b	N/A	Photocells (option 2)			Each	$	$

4: Fees and Materials for Additional Scope

Attach a wage rate schedule by position to serve as a basis for adding to the scope of work streetlights not listed above on a time and materials basis. Identify any subcontractors included on the wage rate schedule.

Quotes for materials for additional streetlights to be provided by the Contractor during the contract period upon request and specified by the City. Cost of materials subject to a maximum mark-up of 10%.

Bid Form Signature
(Biddner Name--Please Print By:
(Signature) Title:
***** **BID FORM MUST BE SIGNED** *****

Please complete all sections.

Streetlight Maintenance Option A (before LED conversion) Contractor to Provide Labor and Materials	
Pole Quantity	
Per unit pole price (Monthly)	$
Total Monthly Pole Price	$
Total Annual Pole Price	$
Before Conversion - Written	

Streetlight Maintenance Option B (after LED conversion) Contractor to Provide Labor and Materials Not Covered by Warranty	
Pole Quantity	
Per unit pole price (Monthly)	$
Total Monthly Pole Price	$
Total Annual Pole Price	$
After Conversion - Written	

Additional Price Considerations	
Price Escalator if Contract Extended (Optional)	
Year 4	%
Year 5	%
Optional Price Escalator - Written	

Non-Routine and Emergency Services

Standard response time for emergencies will not be more than two hours from the time the call is received. Emergency work is billed based on time and materials as shown in Tables 2.a and 2.b.

2.a Labor/Wages			
Item	**Description**	**Price**	**Units**
E-1	Journeyman Electrician/Lineman		Per Hour
E-1 Price in Words:			
E-2	Journeyman Electrician/Lineman – Overtime		Per Hour
E-2 Price in Words:			
E-3	Apprentice Electrician/Lineman		Per Hour
E-3 Price in Words:			
E-4	Apprentice Electrician/Lineman – Overtime		Per Hour
E-4 Price in Words:			
E-5	Lamp and Photocell Service Person		Per Hour
E-5 Price in Words:			
E-6	Laborer		Per Hour
E-6 Price in Words:			
E-7	Laborer - Overtime		Per Hour
E-7 Price in Words:			

2.b Materials Pricing

Specify materials pricing for items not included in Per Pole pricing above (10% maximum markup). Attach additional bid sheets as needed, using the same format. All materials must meet National Grid Standards.

Item	Description	Price	Units
E-1	Truck (35 to 40 foot bucket truck)		Per Call
E-1 Price in Words:			
E-2	Dump Truck (2 to 3 yard)		Per Call
E-2 Price in Words:			
E-3	Crane (5 to 10 ton)		Per Call
E-3 Price in Words:			
E-4	Pole truck with pole auger		Per Call
E-4 Price in Words:			
E-5	Group relamp (including bulb and photocell cleaning and tree trimming, five or more per request)		Per Fixture
E-5 Price in Words:			
E-6	Cobra lens (dish or flat lens-glass)		Each
E-6 Price in Words:			
E-7	3 foot mast arm w/ hardware w/o fixture		Each
E-7 Price in Words:			
E-8	4 foot mast arm w/ hardware w/o fixture		Each

E-8 Price in Words:			
E-9	6 foot mast arm w/ hardware w/o fixture		Each
E-9 Price in Words:			
E-10	8 foot mast arm w/ hardware w/o fixture		Each
E-10 Price in Words:			
E-11	10 foot mast arm w/ hardware w/o fixture		Each
E-11 Price in Words:			
E-12	12 foot mast arm w/ hardware w/o fixture		Each
E-12 Price in Words:			
E-13	Relocate existing lamp and bracket from old pole to new pole (associated with utility replacements		Each
E-13 Price in Words:			
E-14	Pole – wood		Each
E-14 Price in Words:			
E-15	Pole – fiber (<25 feet)		Each
E-15 Price in Words:			
E-16	Pole – Metal (>25 feet)		Each
E-16 Price in Words:			
E-17	Standard material markup		Percent
E-17 Price in Words:			

Bid Form Signature
(Biddner Name--Please Print By:
(Signature) Title:
***** **BID FORM MUST BE SIGNED** *****

Appendix H1
Summary

City of East Providence
Summary of Lighting Inventory as of May 27, 2016

Count of Bill Print and Tariff Description			Component Type	Source Type				
			Luminaire		Luminaire Total	Pole		Pole Total
Customer Name	Account No	Bill Print and Tariff Description	Overhead	Underground		Overhead	Underground	
CITY OF E PROVIDENCE	28108-12001	LUM HPS FLD 400W	1		1			
	53023-57003	LUM HPS FLD 250W	2		2			
	65485-54003	LUM HPS FLD 250W	9	1	10			
		LUM HPS FLD 400W	4		4			
		LUM HPS POST 100W		12	12			
		LUM HPS RWY 100W	713	35	748			
		LUM HPS RWY 100W TT	85	8	93			
		LUM HPS RWY 150W	1		1			
		LUM HPS RWY 250W	120	13	133			
		LUM HPS RWY 250W TT	171		171			
		LUM HPS RWY 400W	1		1			
		LUM HPS RWY 400W TT	10		10			
		LUM HPS RWY 50W	2804	30	2834			
		LUM HPS RWY 50W TT	572		572			
		LUM INC RWY 105W TT	1		1			
		LUM MV RWY 100W	2		2			
		LUM MV RWY 100W TT	2		2			
		POLE - WOOD				4		4
		POLE FIBER PT <25					7	7
		POLE FIBER PT <25FT					5	5
		POLE FIBER RWY=>25					9	9
		POLE FIBERRWY=>25TT					3	3
		POLE METAL =>25FT					34	34
		POLE METAL W/BASE					41	41
	77944-73007	LUM HPS FLD 250W	1		1			
	90426-19008	LUM HPS FLD 400W	3		3			
		LUM HPS POST 100W		30	30			
		LUM HPS POST 50W		8	8			
		LUM HPS RWY 100W	45	4	49			
		LUM HPS RWY 100W TT	4	1	5			
		LUM HPS RWY 250W	14	1	15			
		LUM HPS RWY 250W TT	17		17			
		LUM HPS RWY 50W	176	2	178			

CITY OF E PROVIDENCE	9042619008	LUM HPS RWY 50W TT	57		57			
		POLE FIBER PT <25					20	20
		POLE FIBER RWY<25FT					18	18
		POLE FIBER RWY=>25					2	2
		POLE METAL =>25' TT					1	1
		POLE METAL =>25FT					5	5
CITY OF E PROVIDENCE Total			4815	145	4960	4	145	149
CITY OF EAST PROVIDENCE	40565-89009	LUM HPS FLD 400W	1		1			
CITY OF EAST PROVIDENCE Total			1		1			
E PROVIDENCE POLICE	90439-03009	LUM HPS FLD 250W	1		1			
E PROVIDENCE POLICE Total			1		1			
Inactive	0-	LUM MV RWY 175W	1		1			
		LUM MV RWY 400W	1		1			
Inactive Total			2		2			
Grand Total			4819	145	4964	4	145	149

Bill Print and Tariff Description Key
FIBER = Fiberglass standard
FLD = Flood light or Area light
HPS = High Pressure Sodium
LUM = Luminaire (the light fixture)
METAL = Aluminum or Cast Iron standard
MV = Mercury Vapor
POST/PT = Post Top
RWY = Roadway, or Street light
TT = Temporary Turn Off

Appendix H1
Inventory

City of East Providence
Lighting Inventory as of May 27, 2016

Pole No	Pole Suffix	Light Sequ No	Street Name	Street Suffix	Ngrid Line No	Source Type	Pole Use	Component Type	Bill Print and Tariff Description	Billing Status	Lamp Wattage	Account No	Rate	Customer Name
0002	000	2	ABBOTT	ST	5	Overhead	Distribution	Luminaire	LUM HPS RWY 50W	Active	50	65485-54003	S-14	CITY OF E PROVIDENCE
0003	000	2	ABBOTT	ST	5	Overhead	Distribution	Luminaire	LUM HPS RWY 50W	Active	50	65485-54003	S-14	CITY OF E PROVIDENCE
0005	000	2	ABBOTT	ST	5	Overhead	Distribution	Luminaire	LUM HPS RWY 50W	Active	50	65485-54003	S-14	CITY OF E PROVIDENCE
0007	000	2	ABBOTT	ST	5	Overhead	Distribution	Luminaire	LUM HPS RWY 50W TT	Temp Turn Off	50	65485-54003	S-14	CITY OF E PROVIDENCE
0002	000	2	ABBY	ST	10	Overhead	Distribution	Luminaire	LUM HPS RWY 50W	Active	50	65485-54003	S-14	CITY OF E PROVIDENCE
0001	000	2	ABERDEEN	RD	15	Overhead	Distribution	Luminaire	LUM HPS RWY 50W	Active	50	65485-54003	S-14	CITY OF E PROVIDENCE
0003	000	2	ABERDEEN	RD	15	Overhead	Distribution	Luminaire	LUM HPS RWY 50W	Active	50	65485-54003	S-14	CITY OF E PROVIDENCE
0005	000	2	ABERDEEN	RD	15	Overhead	Distribution	Luminaire	LUM HPS RWY 50W	Active	50	65485-54003	S-14	CITY OF E PROVIDENCE
0007	000	2	ABERDEEN	RD	15	Overhead	Distribution	Luminaire	LUM HPS RWY 50W	Active	50	65485-54003	S-14	CITY OF E PROVIDENCE
0002	000	2	ABRAHAM	RD	20	Overhead	Distribution	Luminaire	LUM HPS RWY 50W	Active	50	90426-19008	S-14	CITY OF E PROVIDENCE
0004	000	2	ABRAHAM	RD	20	Overhead	Distribution	Luminaire	LUM HPS RWY 50W	Active	50	65485-54003	S-14	CITY OF E PROVIDENCE
0001	000	2	ADAMS	AVE	25	Overhead	Distribution	Luminaire	LUM HPS RWY 50W	Active	50	65485-54003	S-14	CITY OF E PROVIDENCE
0003	000	2	ADAMS	AVE	25	Overhead	Distribution	Luminaire	LUM HPS RWY 50W TT	Temp Turn Off	50	65485-54003	S-14	CITY OF E PROVIDENCE
0005	000	2	ADAMS	AVE	25	Overhead	Distribution	Luminaire	LUM HPS RWY 50W	Active	50	65485-54003	S-14	CITY OF E PROVIDENCE
0007	000	2	ADAMS	AVE	25	Overhead	Distribution	Luminaire	LUM HPS RWY 50W	Active	50	65485-54003	S-14	CITY OF E PROVIDENCE
0002	000	2	ADELE	AVE	30	Overhead	Distribution	Luminaire	LUM HPS RWY 50W	Active	50	65485-54003	S-14	CITY OF E PROVIDENCE
0003	000	2	ADELE	AVE	30	Overhead	Distribution	Luminaire	LUM HPS RWY 50W	Active	50	65485-54003	S-14	CITY OF E PROVIDENCE
0001	000	2	AGAWAM PARK	RD	35	Overhead	Distribution	Luminaire	LUM HPS RWY 50W	Active	50	65485-54003	S-14	CITY OF E PROVIDENCE
0003	000	2	AGAWAM PARK	RD	35	Overhead	Distribution	Luminaire	LUM HPS RWY 50W	Active	50	65485-54003	S-14	CITY OF E PROVIDENCE
0004	000	2	AGAWAM PARK	RD	35	Overhead	Distribution	Luminaire	LUM HPS RWY 50W TT	Temp Turn Off	50	90426-19008	S-14	CITY OF E PROVIDENCE
0005	000	1	AGAWAM PARK	RD	35	Overhead	Distribution	Luminaire	LUM HPS RWY 50W	Active	50	90426-19008	S-14	CITY OF E PROVIDENCE
0006	000	1	AGAWAM PARK	RD	35	Overhead	Distribution	Luminaire	LUM HPS RWY 50W	Inactive	50	65485-54003	S-14	CITY OF E PROVIDENCE
0002	000	2	AGNES	ST	40	Overhead	Distribution	Luminaire	LUM HPS RWY 50W	Active	50	65485-54003	S-14	CITY OF E PROVIDENCE
0004	000	2	AGNES	ST	40	Overhead	Distribution	Luminaire	LUM HPS RWY 50W	Active	50	65485-54003	S-14	CITY OF E PROVIDENCE
0007	000	2	AGNES	ST	40	Overhead	Distribution	Luminaire	LUM HPS RWY 50W	Active	50	65485-54003	S-14	CITY OF E PROVIDENCE
0001	000	1	AILANTHUS	ST	45	Overhead	Distribution	Luminaire	LUM HPS RWY 50W	Active	50	65485-54003	S-14	CITY OF E PROVIDENCE
0002	000	1	AILANTHUS	ST	45	Overhead	Distribution	Luminaire	LUM HPS RWY 50W	Active	50	65485-54003	S-14	CITY OF E PROVIDENCE
0025	000	0	AILANTHUS	ST	45	Overhead	Street Lighting	Pole	POLE - WOOD	Inactive	0	65485-54003	S-14	CITY OF E PROVIDENCE
0025	000	1	AILANTHUS	ST	45	Overhead	Street Lighting	Luminaire	LUM HPS RWY 100W	Inactive	100	65485-54003	S-14	CITY OF E PROVIDENCE
0001	000	2	ALBERT	AVE	55	Overhead	Distribution	Luminaire	LUM HPS RWY 50W	Active	50	65485-54003	S-14	CITY OF E PROVIDENCE
0003	000	2	ALBERT	AVE	55	Overhead	Distribution	Luminaire	LUM HPS RWY 50W	Active	50	65485-54003	S-14	CITY OF E PROVIDENCE
0002	000	2	ALDEN	ST	60	Overhead	Distribution	Luminaire	LUM HPS RWY 50W	Active	50	65485-54003	S-14	CITY OF E PROVIDENCE
0001	000	2	ALEXANDER	AVE	65	Overhead	Distribution	Luminaire	LUM HPS RWY 50W	Active	50	65485-54003	S-14	CITY OF E PROVIDENCE
0004	000	2	ALEXANDER	AVE	65	Overhead	Distribution	Luminaire	LUM HPS RWY 50W	Active	50	65485-54003	S-14	CITY OF E PROVIDENCE
0006	000	2	ALEXANDER	AVE	65	Overhead	Distribution	Luminaire	LUM HPS RWY 50W	Active	50	65485-54003	S-14	CITY OF E PROVIDENCE
0002	000	2	ALFORD	ST	70	Overhead	Distribution	Luminaire	LUM HPS RWY 50W	Active	50	65485-54003	S-14	CITY OF E PROVIDENCE
0001	000	2	ALGONQUIN	RD	75	Overhead	Distribution	Luminaire	LUM HPS RWY 50W	Active	50	65485-54003	S-14	CITY OF E PROVIDENCE
0003	000	2	ALGONQUIN	RD	75	Overhead	Distribution	Luminaire	LUM HPS RWY 50W	Active	50	65485-54003	S-14	CITY OF E PROVIDENCE
0004	000	2	ALGONQUIN	RD	75	Overhead	Distribution	Luminaire	LUM HPS RWY 50W	Active	50	65485-54003	S-14	CITY OF E PROVIDENCE
0007	000	2	ALGONQUIN	RD	75	Overhead	Distribution	Luminaire	LUM HPS RWY 50W	Active	50	65485-54003	S-14	CITY OF E PROVIDENCE
0008	000	2	ALGONQUIN	RD	75	Overhead	Distribution	Luminaire	LUM HPS RWY 50W	Active	50	65485-54003	S-14	CITY OF E PROVIDENCE
0012	000	2	ALGONQUIN	RD	75	Overhead	Distribution	Luminaire	LUM HPS RWY 50W	Active	50	65485-54003	S-14	CITY OF E PROVIDENCE
0014	000	2	ALGONQUIN	RD	75	Overhead	Distribution	Luminaire	LUM HPS RWY 50W	Active	50	65485-54003	S-14	CITY OF E PROVIDENCE
0016	000	2	ALGONQUIN	RD	75	Overhead	Distribution	Luminaire	LUM HPS RWY 50W	Active	50	65485-54003	S-14	CITY OF E PROVIDENCE
0018	000	2	ALGONQUIN	RD	75	Overhead	Distribution	Luminaire	LUM HPS RWY 50W	Active	50	65485-54003	S-14	CITY OF E PROVIDENCE
0001	000	2	ALICE	ST	80	Overhead	Distribution	Luminaire	LUM HPS RWY 50W TT	Temp Turn Off	50	65485-54003	S-14	CITY OF E PROVIDENCE
0002	000	1	ALICE	ST	80	Overhead	Distribution	Luminaire	LUM HPS RWY 50W	Active	50	65485-54003	S-14	CITY OF E PROVIDENCE
0004	000	1	ALICE	ST	80	Overhead	Distribution	Luminaire	LUM HPS RWY 50W	Active	50	65485-54003	S-14	CITY OF E PROVIDENCE
0006	000	2	ALICE	ST	80	Overhead	Distribution	Luminaire	LUM HPS RWY 50W	Active	50	65485-54003	S-14	CITY OF E PROVIDENCE
0008	000	1	ALICE	ST	80	Overhead	Distribution	Luminaire	LUM HPS RWY 50W	Active	50	65485-54003	S-14	CITY OF E PROVIDENCE
0001	000	2	ALLEN	AVE	85	Overhead	Distribution	Luminaire	LUM HPS RWY 50W	Active	50	65485-54003	S-14	CITY OF E PROVIDENCE
0003	000	2	ALLEN	AVE	85	Overhead	Distribution	Luminaire	LUM HPS RWY 50W	Active	50	65485-54003	S-14	CITY OF E PROVIDENCE

Pole No	Pole Suffix	Light Sequ No	Street Name	Street Suffix	Ngrid Line No	Source Type	Pole Use	Component Type	Bill Print and Tariff Description	Billing Status	Lamp Wattage	Account No	Rate	Customer Name
0005	000	1	ALLEN	AVE	85	Overhead	Distribution	Luminaire	LUM HPS RWY 50W	Active	50	65485-54003	S-14	CITY OF E PROVIDENCE
0009	000	2	ALLEN	AVE	85	Overhead	Distribution	Luminaire	LUM HPS RWY 50W	Active	50	65485-54003	S-14	CITY OF E PROVIDENCE
0011	000	2	ALLEN	AVE	85	Overhead	Distribution	Luminaire	LUM HPS RWY 50W	Active	50	65485-54003	S-14	CITY OF E PROVIDENCE
0013	000	2	ALLEN	AVE	85	Overhead	Distribution	Luminaire	LUM HPS RWY 50W TT	Temp Turn Off	50	65485-54003	S-14	CITY OF E PROVIDENCE
0014	000	2	ALLEN	AVE	85	Overhead	Distribution	Luminaire	LUM HPS RWY 50W	Active	50	65485-54003	S-14	CITY OF E PROVIDENCE
0015	000	2	ALLEN	AVE	85	Overhead	Distribution	Luminaire	LUM HPS RWY 50W	Active	50	65485-54003	S-14	CITY OF E PROVIDENCE
0017	000	2	ALLEN	AVE	85	Overhead	Distribution	Luminaire	LUM HPS RWY 50W	Active	50	65485-54003	S-14	CITY OF E PROVIDENCE
0302	025	2	ALLEN	AVE	85	Overhead	Distribution	Luminaire	LUM HPS RWY 50W	Active	50	65485-54003	S-14	CITY OF E PROVIDENCE
0302	050	2	ALLEN	AVE	85	Overhead	Distribution	Luminaire	LUM HPS RWY 50W	Active	50	65485-54003	S-14	CITY OF E PROVIDENCE
0001	000	1	ALLERTON	AVE	90	Overhead	Distribution	Luminaire	LUM HPS RWY 50W	Active	50	65485-54003	S-14	CITY OF E PROVIDENCE
0001	050	2	ALLERTON	AVE	90	Overhead	Distribution	Luminaire	LUM HPS RWY 50W	Active	50	65485-54003	S-14	CITY OF E PROVIDENCE
0003	000	2	ALLERTON	AVE	90	Overhead	Distribution	Luminaire	LUM HPS RWY 50W	Active	50	65485-54003	S-14	CITY OF E PROVIDENCE
0006	000	2	ALLERTON	AVE	90	Overhead	Distribution	Luminaire	LUM HPS RWY 50W	Active	50	65485-54003	S-14	CITY OF E PROVIDENCE
0008	000	2	ALLERTON	AVE	90	Overhead	Distribution	Luminaire	LUM HPS RWY 50W TT	Temp Turn Off	50	65485-54003	S-14	CITY OF E PROVIDENCE
0009	000	2	ALLERTON	AVE	90	Overhead	Distribution	Luminaire	LUM HPS RWY 50W	Active	50	65485-54003	S-14	CITY OF E PROVIDENCE
0011	000	2	ALLERTON	AVE	90	Overhead	Distribution	Luminaire	LUM HPS RWY 50W	Active	50	65485-54003	S-14	CITY OF E PROVIDENCE
0013	000	2	ALLERTON	AVE	90	Overhead	Distribution	Luminaire	LUM HPS RWY 50W TT	Temp Turn Off	50	65485-54003	S-14	CITY OF E PROVIDENCE
0014	000	2	ALLERTON	AVE	90	Overhead	Distribution	Luminaire	LUM HPS RWY 50W	Active	50	65485-54003	S-14	CITY OF E PROVIDENCE
0015	000	2	ALLERTON	AVE	90	Overhead	Distribution	Luminaire	LUM HPS RWY 50W TT	Temp Turn Off	50	65485-54003	S-14	CITY OF E PROVIDENCE
0002	000	1	ALLISON	CT	92	Overhead	Distribution	Luminaire	LUM HPS RWY 50W	Active	50	90426-19008	S-14	CITY OF E PROVIDENCE
0004	000	1	ALLISON	CT	92	Overhead	Distribution	Luminaire	LUM HPS RWY 50W	Active	50	90426-19008	S-14	CITY OF E PROVIDENCE
0006	000	1	ALLISON	CT	92	Overhead	Distribution	Luminaire	LUM HPS RWY 50W	Active	50	90426-19008	S-14	CITY OF E PROVIDENCE
0001	000	2	ALMA	AVE	95	Overhead	Distribution	Luminaire	LUM MV RWY 100W TT	Temp Turn Off	100	65485-54003	S-14	CITY OF E PROVIDENCE
0002	000	2	ALMA	AVE	95	Overhead	Distribution	Luminaire	LUM HPS RWY 50W	Active	50	65485-54003	S-14	CITY OF E PROVIDENCE
0001	000	2	ALMEIDA	AVE	100	Overhead	Distribution	Luminaire	LUM HPS RWY 100W TT	Temp Turn Off	100	65485-54003	S-14	CITY OF E PROVIDENCE
0002	000	2	ALMEIDA	AVE	100	Overhead	Distribution	Luminaire	LUM HPS RWY 50W	Active	50	65485-54003	S-14	CITY OF E PROVIDENCE
0003	000	2	ALMEIDA	AVE	100	Overhead	Distribution	Luminaire	LUM HPS RWY 100W TT	Temp Turn Off	100	65485-54003	S-14	CITY OF E PROVIDENCE
0004	000	2	ALMEIDA	AVE	100	Overhead	Distribution	Luminaire	LUM HPS RWY 50W	Active	50	65485-54003	S-14	CITY OF E PROVIDENCE
0005	000	2	ALMEIDA	AVE	100	Overhead	Distribution	Luminaire	LUM HPS RWY 100W TT	Temp Turn Off	100	65485-54003	S-14	CITY OF E PROVIDENCE
0006	000	2	ALMEIDA	AVE	100	Overhead	Distribution	Luminaire	LUM HPS RWY 50W	Active	50	65485-54003	S-14	CITY OF E PROVIDENCE
0007	000	2	ALMEIDA	AVE	100	Overhead	Distribution	Luminaire	LUM HPS RWY 100W TT	Temp Turn Off	100	65485-54003	S-14	CITY OF E PROVIDENCE
0008	000	2	ALMEIDA	AVE	100	Overhead	Distribution	Luminaire	LUM HPS RWY 50W	Active	50	65485-54003	S-14	CITY OF E PROVIDENCE
0009	000	2	ALMEIDA	AVE	100	Overhead	Distribution	Luminaire	LUM HPS RWY 100W TT	Temp Turn Off	100	65485-54003	S-14	CITY OF E PROVIDENCE
0010	000	2	ALMEIDA	AVE	100	Overhead	Distribution	Luminaire	LUM HPS RWY 50W	Active	50	65485-54003	S-14	CITY OF E PROVIDENCE
0011	000	2	ALMEIDA	AVE	100	Overhead	Distribution	Luminaire	LUM HPS RWY 100W TT	Temp Turn Off	100	65485-54003	S-14	CITY OF E PROVIDENCE
0012	000	2	ALMEIDA	AVE	100	Overhead	Distribution	Luminaire	LUM HPS RWY 50W	Active	50	65485-54003	S-14	CITY OF E PROVIDENCE
0004	000	2	AMARAL	ST	110	Overhead	Distribution	Luminaire	LUM HPS RWY 50W	Active	50	65485-54003	S-14	CITY OF E PROVIDENCE
0006	000	1	AMARAL	ST	110	Overhead	Distribution	Luminaire	LUM HPS RWY 50W TT	Temp Turn Off	50	65485-54003	S-14	CITY OF E PROVIDENCE
0007	000	2	AMARAL	ST	110	Overhead	Distribution	Luminaire	LUM HPS RWY 50W	Active	50	65485-54003	S-14	CITY OF E PROVIDENCE
0009	000	2	AMARAL	ST	110	Overhead	Distribution	Luminaire	LUM HPS RWY 100W TT	Temp Turn Off	100	65485-54003	S-14	CITY OF E PROVIDENCE
0011	000	1	AMARAL	ST	110	Overhead	Distribution	Luminaire	LUM HPS RWY 50W	Active	50	65485-54003	S-14	CITY OF E PROVIDENCE
0013	000	2	AMARAL	ST	110	Overhead	Distribution	Luminaire	LUM HPS RWY 50W	Active	50	65485-54003	S-14	CITY OF E PROVIDENCE
0015	000	2	AMARAL	ST	110	Overhead	Distribution	Luminaire	LUM HPS RWY 100W TT	Temp Turn Off	100	65485-54003	S-14	CITY OF E PROVIDENCE
0016	000	2	AMARAL	ST	110	Overhead	Distribution	Luminaire	LUM HPS RWY 50W	Active	50	65485-54003	S-14	CITY OF E PROVIDENCE
0020	000	2	AMARAL	ST	110	Overhead	Distribution	Luminaire	LUM HPS RWY 50W	Active	50	65485-54003	S-14	CITY OF E PROVIDENCE
0022	000	2	AMARAL	ST	110	Overhead	Distribution	Luminaire	LUM HPS RWY 100W	Active	100	65485-54003	S-14	CITY OF E PROVIDENCE
0024	000	2	AMARAL	ST	110	Overhead	Distribution	Luminaire	LUM HPS RWY 50W	Active	50	65485-54003	S-14	CITY OF E PROVIDENCE
0026	000	2	AMARAL	ST	110	Overhead	Distribution	Luminaire	LUM HPS RWY 50W	Active	50	65485-54003	S-14	CITY OF E PROVIDENCE
0028	000	2	AMARAL	ST	110	Overhead	Distribution	Luminaire	LUM HPS RWY 50W	Active	50	65485-54003	S-14	CITY OF E PROVIDENCE
0030	000	1	AMARAL	ST	110	Overhead	Distribution	Luminaire	LUM HPS RWY 50W	Active	50	65485-54003	S-14	CITY OF E PROVIDENCE
0032	000	1	AMARAL	ST	110	Overhead	Distribution	Luminaire	LUM HPS RWY 50W	Inactive	50	65485-54003	S-14	CITY OF E PROVIDENCE
0005	000	2	ANAMA	AVE	115	Overhead	Distribution	Luminaire	LUM HPS RWY 50W	Active	50	65485-54003	S-14	CITY OF E PROVIDENCE
0006	000	2	ANAMA	AVE	115	Overhead	Distribution	Luminaire	LUM HPS RWY 50W	Red Cap Perm	50	65485-54003	S-14	CITY OF E PROVIDENCE
0007	000	2	ANAMA	AVE	115	Overhead	Distribution	Luminaire	LUM HPS RWY 50W	Active	50	65485-54003	S-14	CITY OF E PROVIDENCE
0008	000	2	ANAMA	AVE	115	Overhead	Distribution	Luminaire	LUM HPS RWY 50W	Active	50	65485-54003	S-14	CITY OF E PROVIDENCE

Pole No	Pole Suffix	Light Sequ No	Street Name	Street Suffix	Ngrid Line No	Source Type	Pole Use	Component Type	Bill Print and Tariff Description	Billing Status	Lamp Wattage	Account No	Rate	Customer Name
0009	000	2	ANAMA	AVE	115	Overhead	Distribution	Luminaire	LUM HPS RWY 50W TT	Temp Turn Off	50	65485-54003	S-14	CITY OF E PROVIDENCE
0001	000	0	ANCHOR	WAY	8762	Underground	Street Lighting	Pole	POLE FIBER RWY=>25	Inactive	0	65485-54003	S-14	CITY OF E PROVIDENCE
0001	000	1	ANCHOR	WAY	8762	Underground	Street Lighting	Luminaire	LUM HPS RWY 100W	Inactive	100	65485-54003	S-14	CITY OF E PROVIDENCE
0001	000	1	ANGELL	DR	120	Overhead	Distribution	Luminaire	LUM HPS RWY 50W	Inactive	50	65485-54003	S-14	CITY OF E PROVIDENCE
0002	000	2	ANGELL	DR	120	Overhead	Distribution	Luminaire	LUM HPS RWY 50W	Active	50	65485-54003	S-14	CITY OF E PROVIDENCE
0003	000	2	ANGELL	DR	120	Overhead	Distribution	Luminaire	LUM HPS RWY 50W TT	Temp Turn Off	50	65485-54003	S-14	CITY OF E PROVIDENCE
0005	000	2	ANGELL	DR	120	Overhead	Distribution	Luminaire	LUM HPS RWY 50W	Active	50	65485-54003	S-14	CITY OF E PROVIDENCE
0007	000	2	ANGELL	DR	120	Overhead	Distribution	Luminaire	LUM HPS RWY 50W	Active	50	65485-54003	S-14	CITY OF E PROVIDENCE
0002	000	2	ANSON	DR	125	Overhead	Distribution	Luminaire	LUM HPS RWY 50W	Active	50	65485-54003	S-14	CITY OF E PROVIDENCE
0004	000	2	ANSON	DR	125	Overhead	Distribution	Luminaire	LUM HPS RWY 50W	Active	50	65485-54003	S-14	CITY OF E PROVIDENCE
0006	000	2	ANSON	DR	125	Overhead	Distribution	Luminaire	LUM HPS RWY 50W	Active	50	65485-54003	S-14	CITY OF E PROVIDENCE
0008	000	2	ANSON	DR	125	Overhead	Distribution	Luminaire	LUM HPS RWY 50W	Active	50	65485-54003	S-14	CITY OF E PROVIDENCE
0010	000	2	ANSON	DR	125	Overhead	Distribution	Luminaire	LUM HPS RWY 50W	Active	50	65485-54003	S-14	CITY OF E PROVIDENCE
0012	000	2	ANSON	DR	125	Overhead	Distribution	Luminaire	LUM HPS RWY 50W	Active	50	90426-19008	S-14	CITY OF E PROVIDENCE
0014	000	2	ANSON	DR	125	Overhead	Distribution	Luminaire	LUM HPS RWY 50W	Active	50	65485-54003	S-14	CITY OF E PROVIDENCE
0002	000	2	ANTHONY	ST	130	Overhead	Distribution	Luminaire	LUM HPS RWY 50W	Active	50	65485-54003	S-14	CITY OF E PROVIDENCE
0003	000	2	ANTHONY	ST	130	Overhead	Distribution	Luminaire	LUM HPS RWY 50W	Active	50	65485-54003	S-14	CITY OF E PROVIDENCE
0004	000	2	ANTHONY	ST	130	Overhead	Distribution	Luminaire	LUM HPS RWY 50W	Active	50	65485-54003	S-14	CITY OF E PROVIDENCE
0005	000	2	ANTHONY	ST	130	Overhead	Distribution	Luminaire	LUM HPS RWY 50W	Active	50	65485-54003	S-14	CITY OF E PROVIDENCE
0006	000	2	ANTHONY	ST	130	Overhead	Distribution	Luminaire	LUM HPS RWY 50W TT	Temp Turn Off	50	65485-54003	S-14	CITY OF E PROVIDENCE
0007	000	2	ANTHONY	ST	130	Overhead	Distribution	Luminaire	LUM HPS RWY 50W	Active	50	65485-54003	S-14	CITY OF E PROVIDENCE
0008	000	2	ANTHONY	ST	130	Overhead	Distribution	Luminaire	LUM HPS RWY 50W TT	Temp Turn Off	50	65485-54003	S-14	CITY OF E PROVIDENCE
0009	000	2	ANTHONY	ST	130	Overhead	Distribution	Luminaire	LUM HPS RWY 50W	Active	50	65485-54003	S-14	CITY OF E PROVIDENCE
0010	000	2	ANTHONY	ST	130	Overhead	Distribution	Luminaire	LUM HPS RWY 50W TT	Temp Turn Off	50	65485-54003	S-14	CITY OF E PROVIDENCE
0011	000	2	ANTHONY	ST	130	Overhead	Distribution	Luminaire	LUM HPS RWY 50W	Active	50	65485-54003	S-14	CITY OF E PROVIDENCE
0012	000	2	ANTHONY	ST	130	Overhead	Distribution	Luminaire	LUM HPS RWY 50W TT	Temp Turn Off	50	65485-54003	S-14	CITY OF E PROVIDENCE
0013	000	2	ANTHONY	ST	130	Overhead	Distribution	Luminaire	LUM HPS RWY 50W	Active	50	65485-54003	S-14	CITY OF E PROVIDENCE
0014	000	2	ANTHONY	ST	130	Overhead	Distribution	Luminaire	LUM HPS RWY 50W TT	Temp Turn Off	50	65485-54003	S-14	CITY OF E PROVIDENCE
0015	000	2	ANTHONY	ST	130	Overhead	Distribution	Luminaire	LUM HPS RWY 50W	Active	50	65485-54003	S-14	CITY OF E PROVIDENCE
0016	000	2	ANTHONY	ST	130	Overhead	Distribution	Luminaire	LUM HPS RWY 50W TT	Temp Turn Off	50	65485-54003	S-14	CITY OF E PROVIDENCE
0017	000	2	ANTHONY	ST	130	Overhead	Distribution	Luminaire	LUM HPS RWY 50W	Active	50	65485-54003	S-14	CITY OF E PROVIDENCE
0020	000	2	ANTHONY	ST	130	Overhead	Distribution	Luminaire	LUM HPS RWY 50W	Active	50	65485-54003	S-14	CITY OF E PROVIDENCE
0022	000	2	ANTHONY	ST	130	Overhead	Distribution	Luminaire	LUM HPS RWY 50W	Active	50	65485-54003	S-14	CITY OF E PROVIDENCE
0023	000	2	ANTHONY	ST	130	Overhead	Distribution	Luminaire	LUM HPS RWY 50W TT	Temp Turn Off	50	65485-54003	S-14	CITY OF E PROVIDENCE
0001	000	2	ANTIGO	CT	132	Overhead	Distribution	Luminaire	LUM HPS RWY 50W	Active	50	65485-54003	S-14	CITY OF E PROVIDENCE
0001	000	0	APOLLO	RD	137	Underground	Street Lighting	Pole	POLE METAL W/BASE	Active	0	65485-54003	S-14	CITY OF E PROVIDENCE
0001	000	1	APOLLO	RD	137	Underground	Street Lighting	Luminaire	LUM HPS RWY 50W	Active	50	65485-54003	S-14	CITY OF E PROVIDENCE
0002	000	0	APOLLO	RD	137	Underground	Street Lighting	Pole	POLE METAL W/BASE	Active	0	65485-54003	S-14	CITY OF E PROVIDENCE
0002	000	1	APOLLO	RD	137	Underground	Street Lighting	Luminaire	LUM HPS RWY 100W	Active	100	65485-54003	S-14	CITY OF E PROVIDENCE
0003	000	0	APOLLO	RD	137	Underground	Street Lighting	Pole	POLE METAL W/BASE	Active	0	65485-54003	S-14	CITY OF E PROVIDENCE
0003	000	1	APOLLO	RD	137	Underground	Street Lighting	Luminaire	LUM HPS RWY 50W	Active	50	65485-54003	S-14	CITY OF E PROVIDENCE
0004	000	0	APOLLO	RD	137	Underground	Street Lighting	Pole	POLE METAL W/BASE	Active	0	65485-54003	S-14	CITY OF E PROVIDENCE
0004	000	1	APOLLO	RD	137	Underground	Street Lighting	Luminaire	LUM HPS RWY 100W	Active	100	65485-54003	S-14	CITY OF E PROVIDENCE
0001	000	2	APPIAN	WAY	140	Overhead	Distribution	Luminaire	LUM HPS RWY 50W	Active	50	65485-54003	S-14	CITY OF E PROVIDENCE
0003	000	2	APPIAN	WAY	140	Overhead	Distribution	Luminaire	LUM HPS RWY 50W	Active	50	65485-54003	S-14	CITY OF E PROVIDENCE
0005	000	2	APPIAN	WAY	140	Overhead	Distribution	Luminaire	LUM HPS RWY 50W TT	Temp Turn Off	50	65485-54003	S-14	CITY OF E PROVIDENCE
0006	000	2	APPIAN	WAY	140	Overhead	Distribution	Luminaire	LUM HPS RWY 50W	Active	50	65485-54003	S-14	CITY OF E PROVIDENCE
0007	000	2	APPIAN	WAY	140	Overhead	Distribution	Luminaire	LUM HPS RWY 50W TT	Temp Turn Off	50	65485-54003	S-14	CITY OF E PROVIDENCE
0010	000	2	APPIAN	WAY	140	Overhead	Distribution	Luminaire	LUM HPS RWY 50W	Active	50	65485-54003	S-14	CITY OF E PROVIDENCE
0012	000	2	APPIAN	WAY	140	Overhead	Distribution	Luminaire	LUM HPS RWY 50W	Active	50	65485-54003	S-14	CITY OF E PROVIDENCE
0001	000	2	APULIA	ST	150	Overhead	Distribution	Luminaire	LUM HPS RWY 50W	Active	50	65485-54003	S-14	CITY OF E PROVIDENCE
0003	000	2	APULIA	ST	150	Overhead	Distribution	Luminaire	LUM HPS RWY 50W	Active	50	65485-54003	S-14	CITY OF E PROVIDENCE
0005	000	2	APULIA	ST	150	Overhead	Distribution	Luminaire	LUM HPS RWY 50W	Active	50	65485-54003	S-14	CITY OF E PROVIDENCE
0007	000	2	APULIA	ST	150	Overhead	Distribution	Luminaire	LUM HPS RWY 50W	Active	50	65485-54003	S-14	CITY OF E PROVIDENCE
0008	000	1	APULIA	ST	150	Overhead	Distribution	Luminaire	LUM HPS RWY 100W	Inactive	100	65485-54003	S-14	CITY OF E PROVIDENCE

Pole No	Pole Suffix	Light Sequ No	Street Name	Street Suffix	Ngrid Line No	Source Type	Pole Use	Component Type	Bill Print and Tariff Description	Billing Status	Lamp Wattage	Account No	Rate	Customer Name
0009	000	2	APULIA	ST	150	Overhead	Distribution	Luminaire	LUM HPS RWY 50W	Active	50	65485-54003	S-14	CITY OF E PROVIDENCE
0010	000	2	APULIA	ST	150	Overhead	Distribution	Luminaire	LUM HPS RWY 50W	Active	50	65485-54003	S-14	CITY OF E PROVIDENCE
0011	000	2	APULIA	ST	150	Overhead	Distribution	Luminaire	LUM HPS RWY 50W	Active	50	65485-54003	S-14	CITY OF E PROVIDENCE
0012	000	2	ARBOR	ST	155	Overhead	Distribution	Luminaire	LUM HPS RWY 50W	Active	50	65485-54003	S-14	CITY OF E PROVIDENCE
0014	000	2	ARBOR	ST	155	Overhead	Distribution	Luminaire	LUM HPS RWY 50W	Active	50	65485-54003	S-14	CITY OF E PROVIDENCE
0015	000	1	ARBOR	ST	155	Overhead	Distribution	Luminaire	LUM HPS RWY 50W	Inactive	50	65485-54003	S-14	CITY OF E PROVIDENCE
0001	000	2	ARCADIA	AVE	160	Overhead	Distribution	Luminaire	LUM HPS RWY 50W	Active	50	65485-54003	S-14	CITY OF E PROVIDENCE
0002	000	2	ARCADIA	AVE	160	Overhead	Distribution	Luminaire	LUM HPS RWY 50W	Active	50	65485-54003	S-14	CITY OF E PROVIDENCE
0004	000	2	ARCADIA	AVE	160	Overhead	Distribution	Luminaire	LUM HPS RWY 50W	Active	50	65485-54003	S-14	CITY OF E PROVIDENCE
0001	000	2	ARGYLE	AVE	165	Overhead	Distribution	Luminaire	LUM HPS RWY 50W	Active	50	65485-54003	S-14	CITY OF E PROVIDENCE
0002	000	2	ARGYLE	AVE	165	Overhead	Distribution	Luminaire	LUM HPS RWY 50W	Active	50	90426-19008	S-14	CITY OF E PROVIDENCE
0004	000	2	ARGYLE	AVE	165	Overhead	Distribution	Luminaire	LUM HPS RWY 50W	Active	50	65485-54003	S-14	CITY OF E PROVIDENCE
0005	000	2	ARGYLE	AVE	165	Overhead	Distribution	Luminaire	LUM HPS RWY 50W	Active	50	65485-54003	S-14	CITY OF E PROVIDENCE
0006	000	2	ARGYLE	AVE	165	Overhead	Distribution	Luminaire	LUM HPS RWY 50W	Active	50	65485-54003	S-14	CITY OF E PROVIDENCE
0001	000	2	ARLINGTON	ST	170	Overhead	Distribution	Luminaire	LUM HPS RWY 50W	Active	50	65485-54003	S-14	CITY OF E PROVIDENCE
0003	000	2	ARLINGTON	ST	170	Overhead	Distribution	Luminaire	LUM HPS RWY 50W	Active	50	65485-54003	S-14	CITY OF E PROVIDENCE
0005	000	2	ARLINGTON	ST	170	Overhead	Distribution	Luminaire	LUM HPS RWY 50W	Active	50	65485-54003	S-14	CITY OF E PROVIDENCE
0007	000	2	ARLINGTON	ST	170	Overhead	Distribution	Luminaire	LUM HPS RWY 50W	Active	50	65485-54003	S-14	CITY OF E PROVIDENCE
0008	000	2	ARLINGTON	ST	170	Overhead	Distribution	Luminaire	LUM HPS RWY 50W TT	Temp Turn Off	50	65485-54003	S-14	CITY OF E PROVIDENCE
0009	000	2	ARLINGTON	ST	170	Overhead	Distribution	Luminaire	LUM HPS RWY 50W	Active	50	65485-54003	S-14	CITY OF E PROVIDENCE
0012	000	2	ARLINGTON	ST	170	Overhead	Distribution	Luminaire	LUM HPS RWY 50W	Active	50	65485-54003	S-14	CITY OF E PROVIDENCE
0014	000	2	ARLINGTON	ST	170	Overhead	Distribution	Luminaire	LUM HPS RWY 50W	Active	50	65485-54003	S-14	CITY OF E PROVIDENCE
0002	000	2	ARMINGTON	AVE	175	Overhead	Distribution	Luminaire	LUM HPS RWY 50W	Active	50	65485-54003	S-14	CITY OF E PROVIDENCE
0004	000	2	ARMINGTON	AVE	175	Overhead	Distribution	Luminaire	LUM HPS RWY 50W	Active	50	65485-54003	S-14	CITY OF E PROVIDENCE
0004	000	2	ARNOLD	ST	180	Overhead	Distribution	Luminaire	LUM HPS RWY 50W	Active	50	65485-54003	S-14	CITY OF E PROVIDENCE
0005	000	2	ARNOLD	ST	180	Overhead	Distribution	Luminaire	LUM HPS RWY 50W TT	Temp Turn Off	50	65485-54003	S-14	CITY OF E PROVIDENCE
0006	000	2	ARNOLD	ST	180	Overhead	Distribution	Luminaire	LUM HPS RWY 50W	Active	50	65485-54003	S-14	CITY OF E PROVIDENCE
0007	000	2	ARNOLD	ST	180	Overhead	Distribution	Luminaire	LUM HPS RWY 50W	Active	50	65485-54003	S-14	CITY OF E PROVIDENCE
0009	000	2	ARNOLD	ST	180	Overhead	Distribution	Luminaire	LUM HPS RWY 50W TT	Temp Turn Off	50	65485-54003	S-14	CITY OF E PROVIDENCE
0010	000	2	ARNOLD	ST	180	Overhead	Distribution	Luminaire	LUM HPS RWY 50W	Active	50	65485-54003	S-14	CITY OF E PROVIDENCE
0012	050	2	ARNOLD	ST	180	Overhead	Distribution	Luminaire	LUM HPS RWY 50W	Active	50	65485-54003	S-14	CITY OF E PROVIDENCE
0013	000	2	ARNOLD	ST	180	Overhead	Distribution	Luminaire	LUM HPS RWY 50W	Active	50	65485-54003	S-14	CITY OF E PROVIDENCE
0016	000	2	ARNOLD	ST	180	Overhead	Distribution	Luminaire	LUM HPS RWY 50W	Active	50	65485-54003	S-14	CITY OF E PROVIDENCE
0017	000	2	ARNOLD	ST	180	Overhead	Distribution	Luminaire	LUM HPS RWY 50W TT	Temp Turn Off	50	65485-54003	S-14	CITY OF E PROVIDENCE
0018	000	2	ARNOLD	ST	180	Overhead	Distribution	Luminaire	LUM HPS RWY 50W	Active	50	65485-54003	S-14	CITY OF E PROVIDENCE
0020	000	2	ARNOLD	ST	180	Overhead	Distribution	Luminaire	LUM HPS RWY 50W	Active	50	65485-54003	S-14	CITY OF E PROVIDENCE
0001	000	2	ARROWHEAD	AVE	185	Overhead	Distribution	Luminaire	LUM HPS RWY 50W	Active	50	90426-19008	S-14	CITY OF E PROVIDENCE
0002	000	2	ARROWHEAD	AVE	185	Overhead	Distribution	Luminaire	LUM HPS RWY 50W	Active	50	90426-19008	S-14	CITY OF E PROVIDENCE
0003	000	2	ARROWHEAD	AVE	185	Overhead	Distribution	Luminaire	LUM HPS RWY 50W	Active	50	90426-19008	S-14	CITY OF E PROVIDENCE
0004	000	2	ARROWHEAD	AVE	185	Overhead	Distribution	Luminaire	LUM HPS RWY 50W TT	Temp Turn Off	50	65485-54003	S-14	CITY OF E PROVIDENCE
0006	000	2	ARROWHEAD	AVE	185	Overhead	Distribution	Luminaire	LUM HPS RWY 50W	Active	50	65485-54003	S-14	CITY OF E PROVIDENCE
0002	000	2	ASH	ST	195	Overhead	Distribution	Luminaire	LUM HPS RWY 50W	Active	50	65485-54003	S-14	CITY OF E PROVIDENCE
0003	000	1	ASH	ST	195	Overhead	Distribution	Luminaire	LUM HPS RWY 50W	Inactive	50	65485-54003	S-14	CITY OF E PROVIDENCE
0002	000	2	ASHTON	RD	205	Overhead	Distribution	Luminaire	LUM HPS RWY 50W	Active	50	65485-54003	S-14	CITY OF E PROVIDENCE
0003	000	2	ASTRAL	AVE	210	Overhead	Distribution	Luminaire	LUM HPS RWY 50W	Active	50	65485-54003	S-14	CITY OF E PROVIDENCE
0004	050	2	ASTRAL	AVE	210	Overhead	Distribution	Luminaire	LUM HPS RWY 50W	Active	50	65485-54003	S-14	CITY OF E PROVIDENCE
0005	000	2	ASTRAL	AVE	210	Overhead	Distribution	Luminaire	LUM HPS RWY 50W	Active	50	65485-54003	S-14	CITY OF E PROVIDENCE
0001	000	2	AUSTIN	AVE	215	Overhead	Distribution	Luminaire	LUM HPS RWY 50W	Active	50	65485-54003	S-14	CITY OF E PROVIDENCE
0004	000	2	AUSTIN	AVE	215	Overhead	Distribution	Luminaire	LUM HPS RWY 50W	Active	50	65485-54003	S-14	CITY OF E PROVIDENCE
0006	000	2	AUSTIN	AVE	215	Overhead	Distribution	Luminaire	LUM HPS RWY 50W	Active	50	65485-54003	S-14	CITY OF E PROVIDENCE
0008	000	2	AUSTIN	AVE	215	Overhead	Distribution	Luminaire	LUM HPS RWY 50W	Active	50	65485-54003	S-14	CITY OF E PROVIDENCE
0010	000	2	AUSTIN	AVE	215	Overhead	Distribution	Luminaire	LUM HPS RWY 50W	Active	50	65485-54003	S-14	CITY OF E PROVIDENCE
0001	000	2	AVENUE A	ST	220	Overhead	Distribution	Luminaire	LUM HPS RWY 50W	Active	50	65485-54003	S-14	CITY OF E PROVIDENCE
0003	000	2	AVENUE B	ST	225	Overhead	Distribution	Luminaire	LUM HPS RWY 50W TT	Temp Turn Off	50	65485-54003	S-14	CITY OF E PROVIDENCE
0002	000	2	BAILEY	ST	235	Overhead	Distribution	Luminaire	LUM HPS RWY 50W	Active	50	65485-54003	S-14	CITY OF E PROVIDENCE

Pole No	Pole Suffix	Light Sequ No	Street Name	Street Suffix	Ngrid Line No	Source Type	Pole Use	Component Type	Bill Print and Tariff Description	Billing Status	Lamp Wattage	Account No	Rate	Customer Name
0004	000	2	BAILEY	ST	235	Overhead	Distribution	Luminaire	LUM HPS RWY 50W	Active	50	65485-54003	S-14	CITY OF E PROVIDENCE
0001	000	2	BAKER	ST	240	Overhead	Distribution	Luminaire	LUM HPS RWY 50W	Active	50	65485-54003	S-14	CITY OF E PROVIDENCE
0002	000	2	BAKER	ST	240	Overhead	Distribution	Luminaire	LUM HPS RWY 50W TT	Temp Turn Off	50	65485-54003	S-14	CITY OF E PROVIDENCE
0003	000	2	BAKER	ST	240	Overhead	Distribution	Luminaire	LUM HPS RWY 50W	Active	50	65485-54003	S-14	CITY OF E PROVIDENCE
0005	000	2	BAKER	ST	240	Overhead	Distribution	Luminaire	LUM HPS RWY 50W	Active	50	65485-54003	S-14	CITY OF E PROVIDENCE
0011	000	1	BAKER	ST	3061	Overhead	Distribution	Luminaire	LUM HPS RWY 50W	Inactive	50	65485-54003	S-14	CITY OF E PROVIDENCE
0012	000	2	BAKER	ST	240	Overhead	Distribution	Luminaire	LUM HPS RWY 50W	Active	50	65485-54003	S-14	CITY OF E PROVIDENCE
0001	000	2	BALDWIN	ST	245	Overhead	Distribution	Luminaire	LUM HPS RWY 50W	Active	50	65485-54003	S-14	CITY OF E PROVIDENCE
0003	000	2	BALDWIN	ST	245	Overhead	Distribution	Luminaire	LUM HPS RWY 50W	Active	50	65485-54003	S-14	CITY OF E PROVIDENCE
0005	000	2	BALDWIN	ST	245	Overhead	Distribution	Luminaire	LUM HPS RWY 50W	Active	50	65485-54003	S-14	CITY OF E PROVIDENCE
0007	000	2	BALDWIN	ST	245	Overhead	Distribution	Luminaire	LUM HPS RWY 50W	Active	50	65485-54003	S-14	CITY OF E PROVIDENCE
0001	000	2	BALKCOM	ST	250	Overhead	Distribution	Luminaire	LUM HPS RWY 50W	Active	50	65485-54003	S-14	CITY OF E PROVIDENCE
0003	000	2	BALKCOM	ST	250	Overhead	Distribution	Luminaire	LUM HPS RWY 50W	Active	50	65485-54003	S-14	CITY OF E PROVIDENCE
0004	000	2	BALKCOM	ST	250	Overhead	Distribution	Luminaire	LUM HPS RWY 50W	Active	50	65485-54003	S-14	CITY OF E PROVIDENCE
0003	000	2	BARBARA	CIR	265	Overhead	Distribution	Luminaire	LUM HPS RWY 50W	Active	50	65485-54003	S-14	CITY OF E PROVIDENCE
0001	000	2	BARBERRY	RD	270	Overhead	Distribution	Luminaire	LUM HPS RWY 50W	Active	50	65485-54003	S-14	CITY OF E PROVIDENCE
0003	000	2	BARBERRY	RD	270	Overhead	Distribution	Luminaire	LUM HPS RWY 50W	Active	50	65485-54003	S-14	CITY OF E PROVIDENCE
0002	000	2	BARNESDALE	RD	280	Overhead	Distribution	Luminaire	LUM HPS RWY 50W TT	Temp Turn Off	50	65485-54003	S-14	CITY OF E PROVIDENCE
0003	000	2	BARNESDALE	RD	280	Overhead	Distribution	Luminaire	LUM HPS RWY 50W TT	Temp Turn Off	50	65485-54003	S-14	CITY OF E PROVIDENCE
0002	000	2	BARNEY	ST	275	Overhead	Distribution	Luminaire	LUM HPS RWY 50W	Active	50	65485-54003	S-14	CITY OF E PROVIDENCE
0004	000	2	BARNEY	ST	275	Overhead	Distribution	Luminaire	LUM HPS RWY 50W	Active	50	65485-54003	S-14	CITY OF E PROVIDENCE
0006	000	2	BARNEY	ST	275	Overhead	Distribution	Luminaire	LUM HPS RWY 50W	Active	50	65485-54003	S-14	CITY OF E PROVIDENCE
0007	000	2	BARNEY	ST	275	Overhead	Distribution	Luminaire	LUM HPS RWY 50W	Active	50	65485-54003	S-14	CITY OF E PROVIDENCE
0009	000	2	BARNEY	ST	275	Overhead	Distribution	Luminaire	LUM HPS RWY 50W	Active	50	65485-54003	S-14	CITY OF E PROVIDENCE
0011	000	2	BARNEY	ST	275	Overhead	Distribution	Luminaire	LUM HPS RWY 50W	Active	50	65485-54003	S-14	CITY OF E PROVIDENCE
0013	000	2	BARNEY	ST	275	Overhead	Distribution	Luminaire	LUM HPS RWY 50W	Active	50	65485-54003	S-14	CITY OF E PROVIDENCE
0014	000	2	BARNEY	ST	275	Overhead	Distribution	Luminaire	LUM HPS RWY 50W	Active	50	65485-54003	S-14	CITY OF E PROVIDENCE
0016	000	2	BARNEY	ST	275	Overhead	Distribution	Luminaire	LUM HPS RWY 50W	Active	50	65485-54003	S-14	CITY OF E PROVIDENCE
0018	000	2	BARNEY	ST	275	Overhead	Distribution	Luminaire	LUM HPS RWY 50W TT	Temp Turn Off	50	65485-54003	S-14	CITY OF E PROVIDENCE
0019	000	2	BARNEY	ST	275	Overhead	Distribution	Luminaire	LUM HPS RWY 50W	Active	50	65485-54003	S-14	CITY OF E PROVIDENCE
0001	000	2	BARRINGTON	CT	281	Overhead	Distribution	Luminaire	LUM HPS RWY 50W TT	Temp Turn Off	50	65485-54003	S-14	CITY OF E PROVIDENCE
0003	000	2	BARRINGTON	CT	281	Overhead	Distribution	Luminaire	LUM HPS RWY 50W	Active	50	65485-54003	S-14	CITY OF E PROVIDENCE
0004	000	2	BARRINGTON	CT	281	Overhead	Distribution	Luminaire	LUM HPS RWY 50W	Active	50	65485-54003	S-14	CITY OF E PROVIDENCE
0001	000	2	BARRY	ST	285	Overhead	Distribution	Luminaire	LUM HPS RWY 50W	Active	50	65485-54003	S-14	CITY OF E PROVIDENCE
0001	000	2	BART	DR	290	Overhead	Distribution	Luminaire	LUM HPS RWY 50W TT	Temp Turn Off	50	90426-19008	S-14	CITY OF E PROVIDENCE
0002	000	1	BART	DR	290	Overhead	Distribution	Luminaire	LUM HPS RWY 50W	Active	50	65485-54003	S-14	CITY OF E PROVIDENCE
0003	000	2	BART	DR	290	Overhead	Distribution	Luminaire	LUM HPS RWY 50W TT	Temp Turn Off	50	90426-19008	S-14	CITY OF E PROVIDENCE
0004	000	2	BART	DR	290	Overhead	Distribution	Luminaire	LUM HPS RWY 50W	Active	50	65485-54003	S-14	CITY OF E PROVIDENCE
0005	000	2	BART	DR	290	Overhead	Distribution	Luminaire	LUM HPS RWY 50W	Active	50	65485-54003	S-14	CITY OF E PROVIDENCE
0006	000	2	BART	DR	290	Overhead	Distribution	Luminaire	LUM HPS RWY 50W	Active	50	65485-54003	S-14	CITY OF E PROVIDENCE
0001	000	2	BATES	AVE	295	Overhead	Distribution	Luminaire	LUM HPS RWY 50W	Active	50	65485-54003	S-14	CITY OF E PROVIDENCE
0001	000	2	BAY	ST	300	Overhead	Distribution	Luminaire	LUM HPS RWY 50W	Active	50	65485-54003	S-14	CITY OF E PROVIDENCE
0001	000	2	BAY VIEW	AVE	305	Overhead	Distribution	Luminaire	LUM HPS RWY 50W	Active	50	65485-54003	S-14	CITY OF E PROVIDENCE
0003	000	2	BAY VIEW	AVE	305	Overhead	Distribution	Luminaire	LUM HPS RWY 50W	Active	50	65485-54003	S-14	CITY OF E PROVIDENCE
0005	000	2	BAY VIEW	AVE	305	Overhead	Distribution	Luminaire	LUM HPS RWY 50W	Active	50	65485-54003	S-14	CITY OF E PROVIDENCE
0007	000	2	BAY VIEW	AVE	305	Overhead	Distribution	Luminaire	LUM HPS RWY 50W	Active	50	65485-54003	S-14	CITY OF E PROVIDENCE
0009	000	2	BAY VIEW	AVE	305	Overhead	Distribution	Luminaire	LUM HPS RWY 50W	Active	50	65485-54003	S-14	CITY OF E PROVIDENCE
0010	000	2	BAY VIEW	AVE	305	Overhead	Distribution	Luminaire	LUM HPS RWY 50W TT	Temp Turn Off	50	65485-54003	S-14	CITY OF E PROVIDENCE
0011	000	2	BAY VIEW	AVE	305	Overhead	Distribution	Luminaire	LUM HPS RWY 50W	Active	50	65485-54003	S-14	CITY OF E PROVIDENCE
0012	000	2	BAY VIEW	AVE	305	Overhead	Distribution	Luminaire	LUM HPS RWY 50W	Active	50	65485-54003	S-14	CITY OF E PROVIDENCE
0013	000	1	BAY VIEW	AVE	305	Overhead	Distribution	Luminaire	LUM HPS RWY 50W	Inactive	50	65485-54003	S-14	CITY OF E PROVIDENCE
0002	000	1	BEACH	RD	310	Overhead	Distribution	Luminaire	LUM HPS RWY 100W	Active	100	65485-54003	S-14	CITY OF E PROVIDENCE
0001	000	2	BEACH POINT	DR	315	Overhead	Distribution	Luminaire	LUM HPS RWY 50W	Active	50	65485-54003	S-14	CITY OF E PROVIDENCE
0003	000	2	BEACH POINT	DR	315	Overhead	Distribution	Luminaire	LUM HPS RWY 50W	Active	50	65485-54003	S-14	CITY OF E PROVIDENCE
0005	000	2	BEACH POINT	DR	315	Overhead	Distribution	Luminaire	LUM HPS RWY 50W	Active	50	65485-54003	S-14	CITY OF E PROVIDENCE

Pole No	Pole Suffix	Light Sequ No	Street Name	Street Suffix	Ngrid Line No	Source Type	Pole Use	Component Type	Bill Print and Tariff Description	Billing Status	Lamp Wattage	Account No	Rate	Customer Name
0007	000	2	BEACH POINT	DR	315	Overhead	Distribution	Luminaire	LUM HPS RWY 50W	Active	50	65485-54003	S-14	CITY OF E PROVIDENCE
0010	000	2	BEACH POINT	DR	315	Overhead	Distribution	Luminaire	LUM HPS RWY 50W	Active	50	65485-54003	S-14	CITY OF E PROVIDENCE
0011	000	2	BEACH POINT	DR	315	Overhead	Distribution	Luminaire	LUM HPS RWY 50W	Active	50	65485-54003	S-14	CITY OF E PROVIDENCE
0002	000	2	BEACH TREE	RD	345	Overhead	Distribution	Luminaire	LUM HPS RWY 50W	Active	50	65485-54003	S-14	CITY OF E PROVIDENCE
0005	000	2	BEACH TREE	RD	345	Overhead	Distribution	Luminaire	LUM HPS RWY 50W	Active	50	65485-54003	S-14	CITY OF E PROVIDENCE
0006	000	2	BEACH TREE	RD	345	Overhead	Distribution	Luminaire	LUM HPS RWY 50W	Active	50	65485-54003	S-14	CITY OF E PROVIDENCE
0001	000	2	BEACON PARK	DR	320	Overhead	Distribution	Luminaire	LUM HPS RWY 50W	Active	50	65485-54003	S-14	CITY OF E PROVIDENCE
0002	000	2	BEACON PARK	DR	320	Overhead	Distribution	Luminaire	LUM HPS RWY 50W	Active	50	65485-54003	S-14	CITY OF E PROVIDENCE
0018	000	1	BEACON PARK	DR	320	Overhead	Distribution	Luminaire	LUM HPS RWY 50W	Inactive	50	65485-54003	S-14	CITY OF E PROVIDENCE
0019	000	2	BEACON PARK	DR	320	Overhead	Distribution	Luminaire	LUM HPS RWY 50W	Active	50	65485-54003	S-14	CITY OF E PROVIDENCE
0003	000	2	BEAUMONT	ST	325	Overhead	Distribution	Luminaire	LUM HPS RWY 50W	Active	50	65485-54003	S-14	CITY OF E PROVIDENCE
0005	000	2	BEAUMONT	ST	325	Overhead	Distribution	Luminaire	LUM HPS RWY 50W	Active	50	65485-54003	S-14	CITY OF E PROVIDENCE
0001	000	1	BEAVER	CT	335	Overhead	Distribution	Luminaire	LUM HPS RWY 50W	Inactive	50	65485-54003	S-14	CITY OF E PROVIDENCE
0002	000	2	BEAVER	CT	335	Overhead	Distribution	Luminaire	LUM HPS RWY 50W TT	Temp Turn Off	50	65485-54003	S-14	CITY OF E PROVIDENCE
0001	000	2	BEAVER	RD	330	Overhead	Distribution	Luminaire	LUM HPS RWY 50W	Active	50	65485-54003	S-14	CITY OF E PROVIDENCE
0003	000	2	BEAVER	RD	330	Overhead	Distribution	Luminaire	LUM HPS RWY 50W	Active	50	65485-54003	S-14	CITY OF E PROVIDENCE
0004	000	2	BEAVER	RD	330	Overhead	Distribution	Luminaire	LUM HPS RWY 50W	Active	50	65485-54003	S-14	CITY OF E PROVIDENCE
0001	025	2	BECKER	AVE	340	Overhead	Distribution	Luminaire	LUM HPS RWY 50W	Active	50	65485-54003	S-14	CITY OF E PROVIDENCE
0001	050	2	BECKER	AVE	340	Overhead	Distribution	Luminaire	LUM HPS RWY 50W	Active	50	65485-54003	S-14	CITY OF E PROVIDENCE
0002	000	2	BECKER	AVE	340	Overhead	Distribution	Luminaire	LUM HPS RWY 50W TT	Temp Turn Off	50	65485-54003	S-14	CITY OF E PROVIDENCE
0003	000	2	BECKER	AVE	340	Overhead	Distribution	Luminaire	LUM HPS RWY 50W	Active	50	65485-54003	S-14	CITY OF E PROVIDENCE
0004	000	2	BECKER	AVE	340	Overhead	Distribution	Luminaire	LUM HPS RWY 50W TT	Temp Turn Off	50	65485-54003	S-14	CITY OF E PROVIDENCE
0006	000	2	BECKER	AVE	340	Overhead	Distribution	Luminaire	LUM HPS RWY 50W	Active	50	65485-54003	S-14	CITY OF E PROVIDENCE
0008	000	2	BECKER	AVE	340	Overhead	Distribution	Luminaire	LUM HPS RWY 50W TT	Temp Turn Off	50	65485-54003	S-14	CITY OF E PROVIDENCE
0013	000	2	BECKER	AVE	340	Overhead	Distribution	Luminaire	LUM HPS RWY 50W	Active	50	65485-54003	S-14	CITY OF E PROVIDENCE
0016	000	2	BECKER	AVE	340	Overhead	Distribution	Luminaire	LUM HPS RWY 50W	Active	50	65485-54003	S-14	CITY OF E PROVIDENCE
0018	000	2	BECKER	AVE	340	Overhead	Distribution	Luminaire	LUM HPS RWY 50W TT	Temp Turn Off	50	65485-54003	S-14	CITY OF E PROVIDENCE
0020	000	2	BECKER	AVE	340	Overhead	Distribution	Luminaire	LUM HPS RWY 50W	Active	50	65485-54003	S-14	CITY OF E PROVIDENCE
0022	000	2	BECKER	AVE	340	Overhead	Distribution	Luminaire	LUM HPS RWY 50W TT	Temp Turn Off	50	65485-54003	S-14	CITY OF E PROVIDENCE
0023	000	2	BECKER	AVE	340	Overhead	Distribution	Luminaire	LUM HPS RWY 50W	Active	50	65485-54003	S-14	CITY OF E PROVIDENCE
0001	000	2	BELL	AVE	350	Overhead	Distribution	Luminaire	LUM HPS RWY 50W	Active	50	65485-54003	S-14	CITY OF E PROVIDENCE
0003	000	2	BELL	AVE	350	Overhead	Distribution	Luminaire	LUM HPS RWY 50W	Active	50	65485-54003	S-14	CITY OF E PROVIDENCE
0004	000	2	BELL	AVE	350	Overhead	Distribution	Luminaire	LUM HPS RWY 50W	Active	50	65485-54003	S-14	CITY OF E PROVIDENCE
0005	000	2	BELL	AVE	350	Overhead	Distribution	Luminaire	LUM HPS RWY 50W	Active	50	65485-54003	S-14	CITY OF E PROVIDENCE
0001	000	2	BELLEVUE	BLVD	355	Overhead	Distribution	Luminaire	LUM HPS RWY 50W TT	Temp Turn Off	50	65485-54003	S-14	CITY OF E PROVIDENCE
0002	000	2	BELLEVUE	BLVD	355	Overhead	Distribution	Luminaire	LUM HPS RWY 50W	Active	50	65485-54003	S-14	CITY OF E PROVIDENCE
0003	000	2	BELLEVUE	BLVD	355	Overhead	Distribution	Luminaire	LUM HPS RWY 50W TT	Temp Turn Off	50	65485-54003	S-14	CITY OF E PROVIDENCE
0004	000	2	BELLEVUE	BLVD	355	Overhead	Distribution	Luminaire	LUM HPS RWY 50W	Active	50	65485-54003	S-14	CITY OF E PROVIDENCE
0005	000	2	BELLEVUE	BLVD	355	Overhead	Distribution	Luminaire	LUM HPS RWY 50W	Active	50	65485-54003	S-14	CITY OF E PROVIDENCE
0006	000	2	BELLEVUE	BLVD	355	Overhead	Distribution	Luminaire	LUM HPS RWY 50W	Active	50	65485-54003	S-14	CITY OF E PROVIDENCE
0002	000	2	BELMONT	AVE	360	Overhead	Distribution	Luminaire	LUM HPS RWY 50W	Active	50	65485-54003	S-14	CITY OF E PROVIDENCE
0004	000	2	BELMONT	AVE	360	Overhead	Distribution	Luminaire	LUM HPS RWY 50W	Active	50	65485-54003	S-14	CITY OF E PROVIDENCE
0006	000	2	BELMONT	AVE	360	Overhead	Distribution	Luminaire	LUM HPS RWY 50W	Active	50	65485-54003	S-14	CITY OF E PROVIDENCE
0007	000	2	BELMONT	AVE	360	Overhead	Distribution	Luminaire	LUM HPS RWY 50W TT	Temp Turn Off	50	65485-54003	S-14	CITY OF E PROVIDENCE
0008	000	2	BELMONT	AVE	360	Overhead	Distribution	Luminaire	LUM HPS RWY 50W	Active	50	65485-54003	S-14	CITY OF E PROVIDENCE
0002	000	2	BENEDICT	ST	365	Overhead	Distribution	Luminaire	LUM HPS RWY 50W	Active	50	65485-54003	S-14	CITY OF E PROVIDENCE
0004	000	2	BENEDICT	ST	365	Overhead	Distribution	Luminaire	LUM HPS RWY 50W	Active	50	65485-54003	S-14	CITY OF E PROVIDENCE
0006	000	2	BENEDICT	ST	365	Overhead	Distribution	Luminaire	LUM HPS RWY 50W	Active	50	65485-54003	S-14	CITY OF E PROVIDENCE
0008	000	2	BENEDICT	ST	365	Overhead	Distribution	Luminaire	LUM HPS RWY 50W	Active	50	65485-54003	S-14	CITY OF E PROVIDENCE
0010	000	2	BENEDICT	ST	365	Overhead	Distribution	Luminaire	LUM HPS RWY 50W	Active	50	65485-54003	S-14	CITY OF E PROVIDENCE
0002	000	2	BENSON	AVE	370	Overhead	Distribution	Luminaire	LUM HPS RWY 50W	Active	50	65485-54003	S-14	CITY OF E PROVIDENCE
0003	000	2	BENSON	AVE	370	Overhead	Distribution	Luminaire	LUM HPS RWY 50W	Active	50	65485-54003	S-14	CITY OF E PROVIDENCE
0004	000	2	BENSON	AVE	370	Overhead	Distribution	Luminaire	LUM HPS RWY 50W TT	Temp Turn Off	50	65485-54003	S-14	CITY OF E PROVIDENCE
0006	000	2	BENSON	AVE	370	Overhead	Distribution	Luminaire	LUM HPS RWY 50W	Active	50	65485-54003	S-14	CITY OF E PROVIDENCE
0001	000	1	BENT	RD	375	Overhead	Distribution	Luminaire	LUM HPS RWY 100W	Inactive	100	65485-54003	S-14	CITY OF E PROVIDENCE

Pole No	Pole Suffix	Light Sequ No	Street Name	Street Suffix	Ngrid Line No	Source Type	Pole Use	Component Type	Bill Print and Tariff Description	Billing Status	Lamp Wattage	Account No	Rate	Customer Name
0002	000	2	BENT	RD	375	Overhead	Distribution	Luminaire	LUM HPS RWY 50W	Active	50	65485-54003	S-14	CITY OF E PROVIDENCE
0003	000	2	BENT	RD	375	Overhead	Distribution	Luminaire	LUM HPS RWY 50W	Active	50	65485-54003	S-14	CITY OF E PROVIDENCE
0006	000	2	BENT	RD	375	Overhead	Distribution	Luminaire	LUM HPS RWY 50W	Active	50	65485-54003	S-14	CITY OF E PROVIDENCE
0008	000	2	BENT	RD	375	Overhead	Distribution	Luminaire	LUM HPS RWY 50W	Active	50	65485-54003	S-14	CITY OF E PROVIDENCE
0010	000	2	BENT	RD	375	Overhead	Distribution	Luminaire	LUM HPS RWY 50W	Active	50	65485-54003	S-14	CITY OF E PROVIDENCE
0001	000	1	BENTLEY	ST	380	Overhead	Distribution	Luminaire	LUM HPS RWY 100W	Active	100	65485-54003	S-14	CITY OF E PROVIDENCE
0003	000	2	BENTLEY	ST	380	Overhead	Distribution	Luminaire	LUM HPS RWY 50W	Active	50	65485-54003	S-14	CITY OF E PROVIDENCE
0004	000	2	BENTLEY	ST	380	Overhead	Distribution	Luminaire	LUM HPS RWY 50W	Active	50	65485-54003	S-14	CITY OF E PROVIDENCE
0005	000	2	BENTLEY	ST	380	Overhead	Distribution	Luminaire	LUM HPS RWY 50W	Active	50	65485-54003	S-14	CITY OF E PROVIDENCE
0006	000	2	BENTLEY	ST	380	Overhead	Distribution	Luminaire	LUM HPS RWY 50W	Active	50	65485-54003	S-14	CITY OF E PROVIDENCE
0008	000	2	BENTLEY	ST	380	Overhead	Distribution	Luminaire	LUM HPS RWY 50W	Active	50	65485-54003	S-14	CITY OF E PROVIDENCE
0009	000	2	BENTLEY	ST	380	Overhead	Distribution	Luminaire	LUM HPS RWY 50W TT	Temp Turn Off	50	65485-54003	S-14	CITY OF E PROVIDENCE
0010	000	2	BENTLEY	ST	380	Overhead	Distribution	Luminaire	LUM HPS RWY 50W	Active	50	65485-54003	S-14	CITY OF E PROVIDENCE
0011	000	2	BENTLEY	ST	380	Overhead	Distribution	Luminaire	LUM HPS RWY 50W	Active	50	65485-54003	S-14	CITY OF E PROVIDENCE
0012	000	2	BENTLEY	ST	380	Overhead	Distribution	Luminaire	LUM HPS RWY 50W TT	Temp Turn Off	50	65485-54003	S-14	CITY OF E PROVIDENCE
0013	000	2	BENTLEY	ST	380	Overhead	Distribution	Luminaire	LUM HPS RWY 50W	Active	50	65485-54003	S-14	CITY OF E PROVIDENCE
0015	000	2	BENTLEY	ST	380	Overhead	Distribution	Luminaire	LUM HPS RWY 50W	Active	50	65485-54003	S-14	CITY OF E PROVIDENCE
0001	000	2	BERGIN	ST	385	Overhead	Distribution	Luminaire	LUM HPS RWY 50W TT	Temp Turn Off	50	65485-54003	S-14	CITY OF E PROVIDENCE
0002	000	2	BERGIN	ST	385	Overhead	Distribution	Luminaire	LUM HPS RWY 50W	Active	50	65485-54003	S-14	CITY OF E PROVIDENCE
0002	000	2	BERKELEY	ST	390	Overhead	Distribution	Luminaire	LUM HPS RWY 50W	Active	50	65485-54003	S-14	CITY OF E PROVIDENCE
0003	000	2	BERKELEY	ST	390	Overhead	Distribution	Luminaire	LUM HPS RWY 50W TT	Temp Turn Off	50	65485-54003	S-14	CITY OF E PROVIDENCE
0004	000	2	BERKELEY	ST	390	Overhead	Distribution	Luminaire	LUM HPS RWY 50W	Active	50	65485-54003	S-14	CITY OF E PROVIDENCE
0008	000	2	BERKELEY	ST	390	Overhead	Distribution	Luminaire	LUM HPS RWY 50W	Active	50	65485-54003	S-14	CITY OF E PROVIDENCE
0009	000	1	BERKELEY	ST	390	Overhead	Distribution	Luminaire	LUM HPS RWY 50W	Inactive	50	65485-54003	S-14	CITY OF E PROVIDENCE
0010	000	2	BERKELEY	ST	390	Overhead	Distribution	Luminaire	LUM HPS RWY 50W	Active	50	65485-54003	S-14	CITY OF E PROVIDENCE
0012	000	2	BERKELEY	ST	390	Overhead	Distribution	Luminaire	LUM HPS RWY 50W TT	Temp Turn Off	50	65485-54003	S-14	CITY OF E PROVIDENCE
0013	000	2	BERKELEY	ST	390	Overhead	Distribution	Luminaire	LUM HPS RWY 50W	Active	50	65485-54003	S-14	CITY OF E PROVIDENCE
0015	000	2	BERKELEY	ST	390	Overhead	Distribution	Luminaire	LUM HPS RWY 50W	Active	50	65485-54003	S-14	CITY OF E PROVIDENCE
0001	000	2	BERWICK	PL	400	Overhead	Distribution	Luminaire	LUM HPS RWY 50W	Active	50	65485-54003	S-14	CITY OF E PROVIDENCE
0002	000	2	BERWICK	PL	400	Overhead	Distribution	Luminaire	LUM HPS RWY 50W	Active	50	65485-54003	S-14	CITY OF E PROVIDENCE
0004	000	2	BERWICK	PL	400	Overhead	Distribution	Luminaire	LUM HPS RWY 50W	Active	50	65485-54003	S-14	CITY OF E PROVIDENCE
0005	000	2	BERWICK	PL	400	Overhead	Distribution	Luminaire	LUM HPS RWY 50W	Active	50	65485-54003	S-14	CITY OF E PROVIDENCE
0001	000	2	BEVERLY	RD	405	Overhead	Distribution	Luminaire	LUM HPS RWY 50W TT	Temp Turn Off	50	65485-54003	S-14	CITY OF E PROVIDENCE
0002	000	2	BEVERLY	RD	405	Overhead	Distribution	Luminaire	LUM HPS RWY 50W	Active	50	65485-54003	S-14	CITY OF E PROVIDENCE
0004	000	2	BEVERLY	RD	405	Overhead	Distribution	Luminaire	LUM HPS RWY 50W	Active	50	65485-54003	S-14	CITY OF E PROVIDENCE
0005	050	2	BEVERLY	RD	405	Overhead	Distribution	Luminaire	LUM HPS RWY 50W	Active	50	65485-54003	S-14	CITY OF E PROVIDENCE
0006	000	1	BEVERLY	RD	405	Overhead	Distribution	Luminaire	LUM HPS RWY 100W	Inactive	100	65485-54003	S-14	CITY OF E PROVIDENCE
0007	000	2	BEVERLY	RD	405	Overhead	Distribution	Luminaire	LUM HPS RWY 50W	Active	50	65485-54003	S-14	CITY OF E PROVIDENCE
0008	000	2	BEVERLY	RD	405	Overhead	Distribution	Luminaire	LUM HPS RWY 50W TT	Temp Turn Off	50	65485-54003	S-14	CITY OF E PROVIDENCE
0009	000	2	BEVERLY	RD	405	Overhead	Distribution	Luminaire	LUM HPS RWY 50W	Active	50	65485-54003	S-14	CITY OF E PROVIDENCE
0010	000	2	BEVERLY	RD	405	Overhead	Distribution	Luminaire	LUM HPS RWY 50W TT	Temp Turn Off	50	65485-54003	S-14	CITY OF E PROVIDENCE
0011	000	2	BEVERLY	RD	405	Overhead	Distribution	Luminaire	LUM HPS RWY 50W	Active	50	65485-54003	S-14	CITY OF E PROVIDENCE
0012	000	1	BEVERLY	RD	405	Overhead	Distribution	Luminaire	LUM HPS RWY 50W	Inactive	50	65485-54003	S-14	CITY OF E PROVIDENCE
0013	000	2	BEVERLY	RD	405	Overhead	Distribution	Luminaire	LUM HPS RWY 50W TT	Temp Turn Off	50	65485-54003	S-14	CITY OF E PROVIDENCE
0014	000	2	BEVERLY	RD	405	Overhead	Distribution	Luminaire	LUM HPS RWY 50W	Active	50	65485-54003	S-14	CITY OF E PROVIDENCE
0016	000	2	BEVERLY	RD	405	Overhead	Distribution	Luminaire	LUM HPS RWY 50W	Active	50	65485-54003	S-14	CITY OF E PROVIDENCE
0001	000	2	BICKNELL	AVE	410	Overhead	Distribution	Luminaire	LUM HPS RWY 50W	Active	50	65485-54003	S-14	CITY OF E PROVIDENCE
0003	000	2	BICKNELL	AVE	410	Overhead	Distribution	Luminaire	LUM HPS RWY 50W	Active	50	65485-54003	S-14	CITY OF E PROVIDENCE
0001	000	2	BIRCH	ST	415	Overhead	Distribution	Luminaire	LUM HPS RWY 50W	Active	50	65485-54003	S-14	CITY OF E PROVIDENCE
0003	000	2	BIRCH	ST	415	Overhead	Distribution	Luminaire	LUM HPS RWY 50W	Active	50	65485-54003	S-14	CITY OF E PROVIDENCE
0005	000	2	BIRCH	ST	415	Overhead	Distribution	Luminaire	LUM HPS RWY 50W	Active	50	65485-54003	S-14	CITY OF E PROVIDENCE
0002	000	2	BIRCHARD	AVE	420	Overhead	Distribution	Luminaire	LUM HPS RWY 50W	Active	50	65485-54003	S-14	CITY OF E PROVIDENCE
0004	000	2	BIRCHARD	AVE	420	Overhead	Distribution	Luminaire	LUM HPS RWY 50W	Active	50	65485-54003	S-14	CITY OF E PROVIDENCE
0001	000	1	BISHOP	AVE	425	Overhead	Distribution	Luminaire	LUM HPS RWY 50W	Active	50	65485-54003	S-14	CITY OF E PROVIDENCE
0003	000	1	BISHOP	AVE	425	Overhead	Distribution	Luminaire	LUM HPS RWY 50W	Active	50	65485-54003	S-14	CITY OF E PROVIDENCE

Pole No	Pole Suffix	Light Sequ No	Street Name	Street Suffix	Ngrid Line No	Source Type	Pole Use	Component Type	Bill Print and Tariff Description	Billing Status	Lamp Wattage	Account No	Rate	Customer Name
0004	000	1	BISHOP	AVE	425	Overhead	Distribution	Luminaire	LUM HPS RWY 50W	Active	50	65485-54003	S-14	CITY OF E PROVIDENCE
0005	000	1	BISHOP	AVE	425	Overhead	Distribution	Luminaire	LUM HPS RWY 50W	Active	50	65485-54003	S-14	CITY OF E PROVIDENCE
0007	000	1	BISHOP	AVE	425	Overhead	Distribution	Luminaire	LUM HPS RWY 50W	Active	50	65485-54003	S-14	CITY OF E PROVIDENCE
0009	050	1	BISHOP	AVE	425	Overhead	Distribution	Luminaire	LUM HPS RWY 50W	Active	50	65485-54003	S-14	CITY OF E PROVIDENCE
0011	000	1	BISHOP	AVE	425	Overhead	Distribution	Luminaire	LUM HPS RWY 50W	Active	50	65485-54003	S-14	CITY OF E PROVIDENCE
0013	000	1	BISHOP	AVE	425	Overhead	Distribution	Luminaire	LUM HPS RWY 50W	Inactive	50	65485-54003	S-14	CITY OF E PROVIDENCE
0014	000	1	BISHOP	AVE	425	Overhead	Distribution	Luminaire	LUM HPS RWY 50W	Active	50	65485-54003	S-14	CITY OF E PROVIDENCE
0016	000	1	BISHOP	AVE	425	Overhead	Distribution	Luminaire	LUM HPS RWY 50W	Active	50	65485-54003	S-14	CITY OF E PROVIDENCE
0018	000	1	BISHOP	AVE	425	Overhead	Distribution	Luminaire	LUM HPS RWY 50W	Active	50	65485-54003	S-14	CITY OF E PROVIDENCE
0001	000	2	BLANCHE	AVE	430	Overhead	Distribution	Luminaire	LUM HPS RWY 50W	Active	50	65485-54003	S-14	CITY OF E PROVIDENCE
0003	000	2	BLANCHE	AVE	430	Overhead	Distribution	Luminaire	LUM HPS RWY 50W	Active	50	65485-54003	S-14	CITY OF E PROVIDENCE
0005	000	2	BLANCHE	AVE	430	Overhead	Distribution	Luminaire	LUM HPS RWY 50W	Active	50	65485-54003	S-14	CITY OF E PROVIDENCE
0007	000	2	BLANCHE	AVE	430	Overhead	Distribution	Luminaire	LUM HPS RWY 50W	Active	50	65485-54003	S-14	CITY OF E PROVIDENCE
0001	000	2	BLANDING	AVE	435	Overhead	Distribution	Luminaire	LUM HPS RWY 50W	Active	50	65485-54003	S-14	CITY OF E PROVIDENCE
0003	000	2	BLANDING	AVE	435	Overhead	Distribution	Luminaire	LUM HPS RWY 50W	Active	50	65485-54003	S-14	CITY OF E PROVIDENCE
0004	000	2	BLANDING	AVE	435	Overhead	Distribution	Luminaire	LUM HPS RWY 50W	Active	50	65485-54003	S-14	CITY OF E PROVIDENCE
0005	000	2	BLANDING	AVE	435	Overhead	Distribution	Luminaire	LUM HPS RWY 50W	Active	50	90426-19008	S-14	CITY OF E PROVIDENCE
0007	000	2	BLANDING	AVE	435	Overhead	Distribution	Luminaire	LUM HPS RWY 50W	Active	50	65485-54003	S-14	CITY OF E PROVIDENCE
0009	000	2	BLANDING	AVE	435	Overhead	Distribution	Luminaire	LUM HPS RWY 50W	Active	50	65485-54003	S-14	CITY OF E PROVIDENCE
0010	000	2	BLANDING	AVE	435	Overhead	Distribution	Luminaire	LUM HPS RWY 50W TT	Temp Turn Off	50	65485-54003	S-14	CITY OF E PROVIDENCE
0012	000	2	BLANDING	AVE	435	Overhead	Distribution	Luminaire	LUM HPS RWY 50W	Active	50	65485-54003	S-14	CITY OF E PROVIDENCE
0014	000	2	BLANDING	AVE	435	Overhead	Distribution	Luminaire	LUM HPS RWY 50W	Active	50	65485-54003	S-14	CITY OF E PROVIDENCE
0002	000	2	BLISS	ST	440	Overhead	Distribution	Luminaire	LUM HPS RWY 50W	Active	50	65485-54003	S-14	CITY OF E PROVIDENCE
0004	000	2	BLISS	ST	440	Overhead	Distribution	Luminaire	LUM HPS RWY 50W	Active	50	65485-54003	S-14	CITY OF E PROVIDENCE
0006	000	2	BLISS	ST	440	Overhead	Distribution	Luminaire	LUM HPS RWY 50W	Active	50	65485-54003	S-14	CITY OF E PROVIDENCE
0008	000	2	BLISS	ST	440	Overhead	Distribution	Luminaire	LUM HPS RWY 50W	Active	50	65485-54003	S-14	CITY OF E PROVIDENCE
0010	000	2	BLISS	ST	440	Overhead	Distribution	Luminaire	LUM HPS RWY 50W	Active	50	65485-54003	S-14	CITY OF E PROVIDENCE
0012	000	2	BLISS	ST	440	Overhead	Distribution	Luminaire	LUM HPS RWY 50W	Active	50	65485-54003	S-14	CITY OF E PROVIDENCE
0014	000	2	BLISS	ST	440	Overhead	Distribution	Luminaire	LUM HPS RWY 50W	Active	50	90426-19008	S-14	CITY OF E PROVIDENCE
0015	000	2	BLISS	ST	440	Overhead	Distribution	Luminaire	LUM HPS RWY 50W	Active	50	65485-54003	S-14	CITY OF E PROVIDENCE
0001	000	2	BLITHE	WAY	460	Overhead	Distribution	Luminaire	LUM HPS RWY 50W	Active	50	65485-54003	S-14	CITY OF E PROVIDENCE
0001	000	2	BLOOMFIELD	ST	445	Overhead	Distribution	Luminaire	LUM HPS RWY 50W	Active	50	90426-19008	S-14	CITY OF E PROVIDENCE
0002	000	2	BLOOMFIELD	ST	445	Overhead	Distribution	Luminaire	LUM HPS RWY 50W	Active	50	65485-54003	S-14	CITY OF E PROVIDENCE
0004	000	2	BLOOMFIELD	ST	445	Overhead	Distribution	Luminaire	LUM HPS RWY 50W	Active	50	65485-54003	S-14	CITY OF E PROVIDENCE
0001	000	2	BLUFF	ST	455	Overhead	Distribution	Luminaire	LUM HPS RWY 50W	Active	50	65485-54003	S-14	CITY OF E PROVIDENCE
0003	000	2	BLUFF	ST	455	Overhead	Distribution	Luminaire	LUM HPS RWY 50W	Active	50	65485-54003	S-14	CITY OF E PROVIDENCE
0005	000	2	BLUFF	ST	455	Overhead	Distribution	Luminaire	LUM HPS RWY 50W TT	Temp Turn Off	50	65485-54003	S-14	CITY OF E PROVIDENCE
0006	000	2	BLUFF	ST	455	Overhead	Distribution	Luminaire	LUM HPS RWY 50W	Active	50	65485-54003	S-14	CITY OF E PROVIDENCE
0008	000	2	BLUFF	ST	455	Overhead	Distribution	Luminaire	LUM HPS RWY 50W	Active	50	65485-54003	S-14	CITY OF E PROVIDENCE
0009	000	2	BLUFF	ST	455	Overhead	Distribution	Luminaire	LUM HPS RWY 50W	Active	50	65485-54003	S-14	CITY OF E PROVIDENCE
0011	000	2	BLUFF	ST	455	Overhead	Distribution	Luminaire	LUM HPS RWY 50W	Active	50	65485-54003	S-14	CITY OF E PROVIDENCE
0014	000	2	BLUFF	ST	455	Overhead	Distribution	Luminaire	LUM HPS RWY 50W	Active	50	65485-54003	S-14	CITY OF E PROVIDENCE
0015	000	2	BLUFF	ST	455	Overhead	Distribution	Luminaire	LUM HPS RWY 50W TT	Temp Turn Off	50	65485-54003	S-14	CITY OF E PROVIDENCE
0001	000	2	BOND	RD	465	Overhead	Distribution	Luminaire	LUM HPS RWY 50W	Active	50	65485-54003	S-14	CITY OF E PROVIDENCE
0003	000	2	BOND	RD	465	Overhead	Distribution	Luminaire	LUM HPS RWY 50W	Active	50	65485-54003	S-14	CITY OF E PROVIDENCE
0005	000	2	BOND	RD	465	Overhead	Distribution	Luminaire	LUM HPS RWY 50W	Active	50	65485-54003	S-14	CITY OF E PROVIDENCE
0006	000	2	BOND	RD	465	Overhead	Distribution	Luminaire	LUM HPS RWY 50W	Active	50	65485-54003	S-14	CITY OF E PROVIDENCE
0001	000	2	BOOTH	AVE	470	Overhead	Distribution	Luminaire	LUM HPS RWY 50W	Active	50	65485-54003	S-14	CITY OF E PROVIDENCE
0003	000	2	BOOTH	AVE	470	Overhead	Distribution	Luminaire	LUM HPS RWY 50W	Active	50	65485-54003	S-14	CITY OF E PROVIDENCE
0005	000	2	BOOTH	AVE	470	Overhead	Distribution	Luminaire	LUM HPS RWY 50W	Active	50	65485-54003	S-14	CITY OF E PROVIDENCE
0007	000	2	BOOTH	AVE	470	Overhead	Distribution	Luminaire	LUM HPS RWY 50W	Active	50	65485-54003	S-14	CITY OF E PROVIDENCE
0002	000	2	BORDEN	ST	475	Overhead	Distribution	Luminaire	LUM HPS RWY 50W	Active	50	65485-54003	S-14	CITY OF E PROVIDENCE
0003	000	2	BORDEN	ST	475	Overhead	Distribution	Luminaire	LUM HPS RWY 50W	Active	50	65485-54003	S-14	CITY OF E PROVIDENCE
0002	000	2	BOSTON	ST	480	Overhead	Distribution	Luminaire	LUM HPS RWY 50W	Active	50	90426-19008	S-14	CITY OF E PROVIDENCE
0001	000	2	BOURNE	AVE	485	Overhead	Distribution	Luminaire	LUM HPS RWY 50W	Active	50	65485-54003	S-14	CITY OF E PROVIDENCE

Pole No	Pole Suffix	Light Sequ No	Street Name	Street Suffix	Ngrid Line No	Source Type	Pole Use	Component Type	Bill Print and Tariff Description	Billing Status	Lamp Wattage	Account No	Rate	Customer Name
0003	000	2	BOURNE	AVE	485	Overhead	Distribution	Luminaire	LUM HPS RWY 50W	Active	50	65485-54003	S-14	CITY OF E PROVIDENCE
0005	000	2	BOURNE	AVE	485	Overhead	Distribution	Luminaire	LUM HPS RWY 50W	Active	50	65485-54003	S-14	CITY OF E PROVIDENCE
0007	000	2	BOURNE	AVE	485	Overhead	Distribution	Luminaire	LUM HPS RWY 50W	Active	50	65485-54003	S-14	CITY OF E PROVIDENCE
0008	000	2	BOURNE	AVE	485	Overhead	Distribution	Luminaire	LUM HPS RWY 50W	Active	50	90426-19008	S-14	CITY OF E PROVIDENCE
0009	000	2	BOURNE	AVE	485	Overhead	Distribution	Luminaire	LUM HPS RWY 50W	Active	50	65485-54003	S-14	CITY OF E PROVIDENCE
0010	000	1	BOURNE	AVE	485	Overhead	Distribution	Luminaire	LUM HPS RWY 250W	Active	250	90426-19008	S-14	CITY OF E PROVIDENCE
0011	000	2	BOURNE	AVE	485	Overhead	Distribution	Luminaire	LUM HPS RWY 50W	Active	50	65485-54003	S-14	CITY OF E PROVIDENCE
0012	000	2	BOURNE	AVE	485	Overhead	Distribution	Luminaire	LUM HPS RWY 50W	Active	50	65485-54003	S-14	CITY OF E PROVIDENCE
0013	000	2	BOURNE	AVE	485	Overhead	Distribution	Luminaire	LUM HPS RWY 50W	Active	50	65485-54003	S-14	CITY OF E PROVIDENCE
0016	000	2	BOURNE	AVE	485	Overhead	Distribution	Luminaire	LUM HPS RWY 50W	Active	50	65485-54003	S-14	CITY OF E PROVIDENCE
0017	000	2	BOURNE	AVE	485	Overhead	Distribution	Luminaire	LUM HPS RWY 50W TT	Temp Turn Off	50	65485-54003	S-14	CITY OF E PROVIDENCE
0018	000	2	BOURNE	AVE	485	Overhead	Distribution	Luminaire	LUM HPS RWY 50W	Active	50	65485-54003	S-14	CITY OF E PROVIDENCE
0020	000	2	BOURNE	AVE	485	Overhead	Distribution	Luminaire	LUM HPS RWY 50W	Active	50	65485-54003	S-14	CITY OF E PROVIDENCE
0022	000	1	BOURNE	AVE	485	Overhead	Distribution	Luminaire	LUM HPS RWY 50W	Active	50	65485-54003	S-14	CITY OF E PROVIDENCE
0024	000	1	BOURNE	AVE	485	Overhead	Distribution	Luminaire	LUM HPS RWY 50W	Active	50	65485-54003	S-14	CITY OF E PROVIDENCE
0025	000	2	BOURNE	AVE	485	Overhead	Distribution	Luminaire	LUM HPS RWY 50W	Active	50	90426-19008	S-14	CITY OF E PROVIDENCE
0026	000	1	BOURNE	AVE	485	Overhead	Distribution	Luminaire	LUM HPS RWY 100W TT	Temp Turn Off	100	65485-54003	S-14	CITY OF E PROVIDENCE
0028	000	2	BOURNE	AVE	485	Overhead	Distribution	Luminaire	LUM HPS RWY 50W	Active	50	65485-54003	S-14	CITY OF E PROVIDENCE
0030	000	2	BOURNE	AVE	485	Overhead	Distribution	Luminaire	LUM HPS RWY 50W	Active	50	65485-54003	S-14	CITY OF E PROVIDENCE
0032	000	2	BOURNE	AVE	485	Overhead	Distribution	Luminaire	LUM HPS RWY 50W	Active	50	65485-54003	S-14	CITY OF E PROVIDENCE
0002	000	2	BOWEN	ST	490	Overhead	Distribution	Luminaire	LUM HPS RWY 50W	Active	50	65485-54003	S-14	CITY OF E PROVIDENCE
0004	000	2	BOWEN	ST	490	Overhead	Distribution	Luminaire	LUM HPS RWY 50W	Active	50	65485-54003	S-14	CITY OF E PROVIDENCE
0006	000	2	BOWEN	ST	490	Overhead	Distribution	Luminaire	LUM HPS RWY 50W	Active	50	65485-54003	S-14	CITY OF E PROVIDENCE
0003	000	2	BOYD	AVE	495	Overhead	Distribution	Luminaire	LUM HPS RWY 50W TT	Temp Turn Off	50	65485-54003	S-14	CITY OF E PROVIDENCE
0006	000	2	BOYD	AVE	495	Overhead	Distribution	Luminaire	LUM HPS RWY 50W	Active	50	65485-54003	S-14	CITY OF E PROVIDENCE
0009	000	2	BOYD	AVE	495	Overhead	Distribution	Luminaire	LUM HPS RWY 50W	Active	50	65485-54003	S-14	CITY OF E PROVIDENCE
0011	000	2	BOYD	AVE	495	Overhead	Distribution	Luminaire	LUM HPS RWY 50W	Active	50	65485-54003	S-14	CITY OF E PROVIDENCE
0015	000	2	BOYD	AVE	495	Overhead	Distribution	Luminaire	LUM HPS RWY 50W	Active	50	65485-54003	S-14	CITY OF E PROVIDENCE
0019	000	1	BOYD	AVE	495	Overhead	Distribution	Luminaire	LUM HPS RWY 50W	Inactive	50	65485-54003	S-14	CITY OF E PROVIDENCE
0024	000	2	BOYD	AVE	495	Overhead	Distribution	Luminaire	LUM HPS RWY 50W	Active	50	90426-19008	S-14	CITY OF E PROVIDENCE
0025	000	1	BOYD	AVE	495	Overhead	Distribution	Luminaire	LUM HPS RWY 50W	Inactive	50	65485-54003	S-14	CITY OF E PROVIDENCE
0026	000	2	BOYD	AVE	495	Overhead	Distribution	Luminaire	LUM HPS RWY 50W	Active	50	90426-19008	S-14	CITY OF E PROVIDENCE
0028	000	1	BOYD	AVE	495	Overhead	Distribution	Luminaire	LUM HPS RWY 50W	Inactive	50	65485-54003	S-14	CITY OF E PROVIDENCE
0029	000	1	BOYD	AVE	495	Overhead	Distribution	Luminaire	LUM HPS RWY 50W	Inactive	50	65485-54003	S-14	CITY OF E PROVIDENCE
0002	000	2	BOYDEN	BLVD	500	Overhead	Distribution	Luminaire	LUM HPS RWY 50W	Active	50	65485-54003	S-14	CITY OF E PROVIDENCE
0004	000	2	BOYDEN	BLVD	500	Overhead	Distribution	Luminaire	LUM HPS RWY 50W	Active	50	65485-54003	S-14	CITY OF E PROVIDENCE
0005	000	2	BOYDEN	BLVD	500	Overhead	Distribution	Luminaire	LUM HPS RWY 50W	Active	50	65485-54003	S-14	CITY OF E PROVIDENCE
0007	000	2	BOYDEN	BLVD	500	Overhead	Distribution	Luminaire	LUM HPS RWY 50W	Active	50	65485-54003	S-14	CITY OF E PROVIDENCE
0009	000	2	BOYDEN	BLVD	500	Overhead	Distribution	Luminaire	LUM HPS RWY 50W	Active	50	65485-54003	S-14	CITY OF E PROVIDENCE
0011	000	2	BOYDEN	BLVD	500	Overhead	Distribution	Luminaire	LUM HPS RWY 50W	Active	50	65485-54003	S-14	CITY OF E PROVIDENCE
0013	000	2	BOYDEN	BLVD	500	Overhead	Distribution	Luminaire	LUM HPS RWY 50W	Active	50	65485-54003	S-14	CITY OF E PROVIDENCE
0003	000	2	BRADFORD	AVE	505	Overhead	Distribution	Luminaire	LUM HPS RWY 50W	Active	50	65485-54003	S-14	CITY OF E PROVIDENCE
0005	000	2	BRADFORD	AVE	505	Overhead	Distribution	Luminaire	LUM HPS RWY 50W	Active	50	90426-19008	S-14	CITY OF E PROVIDENCE
0001	000	2	BRADLEY	ST	510	Overhead	Distribution	Luminaire	LUM HPS RWY 50W	Active	50	65485-54003	S-14	CITY OF E PROVIDENCE
0002	000	2	BRADLEY	ST	510	Overhead	Distribution	Luminaire	LUM HPS RWY 50W	Active	50	65485-54003	S-14	CITY OF E PROVIDENCE
0001	000	2	BRAYTON	AVE	515	Overhead	Distribution	Luminaire	LUM HPS RWY 50W TT	Temp Turn Off	50	65485-54003	S-14	CITY OF E PROVIDENCE
0001	000	1	BREEZE	AVE	525	Overhead	Distribution	Luminaire	LUM HPS RWY 50W	Inactive	50	65485-54003	S-14	CITY OF E PROVIDENCE
0002	000	2	BREEZE	AVE	525	Overhead	Distribution	Luminaire	LUM HPS RWY 50W	Active	50	65485-54003	S-14	CITY OF E PROVIDENCE
0001	000	2	BREEZE	WAY	530	Overhead	Distribution	Luminaire	LUM HPS RWY 50W	Active	50	65485-54003	S-14	CITY OF E PROVIDENCE
0002	000	2	BREEZE	WAY	530	Overhead	Distribution	Luminaire	LUM HPS RWY 50W	Active	50	65485-54003	S-14	CITY OF E PROVIDENCE
0001	000	2	BRENTWOOD	DR	520	Overhead	Distribution	Luminaire	LUM HPS RWY 50W	Active	50	65485-54003	S-14	CITY OF E PROVIDENCE
0002	000	2	BRENTWOOD	DR	520	Overhead	Distribution	Luminaire	LUM HPS RWY 50W	Active	50	65485-54003	S-14	CITY OF E PROVIDENCE
0003	000	2	BRENTWOOD	DR	520	Overhead	Distribution	Luminaire	LUM HPS RWY 50W TT	Temp Turn Off	50	65485-54003	S-14	CITY OF E PROVIDENCE
0005	000	2	BRENTWOOD	DR	520	Overhead	Distribution	Luminaire	LUM HPS RWY 50W	Active	50	65485-54003	S-14	CITY OF E PROVIDENCE
0005	000	0	BRIDGHAM	CT	534	Underground	Street Lighting	Pole	POLE FIBER PT <25	Inactive	0	90426-19008	S-14	CITY OF E PROVIDENCE

Pole No	Pole Suffix	Light Sequ No	Street Name	Street Suffix	Ngrid Line No	Source Type	Pole Use	Component Type	Bill Print and Tariff Description	Billing Status	Lamp Wattage	Account No	Rate	Customer Name
0005	000	1	BRIDGHAM	CT	534	Underground	Street Lighting	Luminaire	LUM HPS POST 50W	Inactive	50	90426-19008	S-14	CITY OF E PROVIDENCE
0006	000	0	BRIDGHAM	CT	534	Underground	Street Lighting	Pole	POLE FIBER PT <25	Inactive	0	90426-19008	S-14	CITY OF E PROVIDENCE
0006	000	1	BRIDGHAM	CT	534	Underground	Street Lighting	Luminaire	LUM HPS POST 50W	Inactive	50	90426-19008	S-14	CITY OF E PROVIDENCE
0002	000	2	BRIDGHAM	ST	535	Overhead	Distribution	Luminaire	LUM HPS RWY 50W	Active	50	65485-54003	S-14	CITY OF E PROVIDENCE
0001	000	2	BRIDGHAM FARM	RD	540	Overhead	Distribution	Luminaire	LUM HPS RWY 50W	Active	50	65485-54003	S-14	CITY OF E PROVIDENCE
0003	000	2	BRIDGHAM FARM	RD	540	Overhead	Distribution	Luminaire	LUM HPS RWY 50W TT	Temp Turn Off	50	65485-54003	S-14	CITY OF E PROVIDENCE
0004	000	2	BRIDGHAM FARM	RD	540	Overhead	Distribution	Luminaire	LUM HPS RWY 50W	Active	50	65485-54003	S-14	CITY OF E PROVIDENCE
0002	000	2	BRIGHTRIDGE	AVE	545	Overhead	Distribution	Luminaire	LUM HPS RWY 100W	Active	100	65485-54003	S-14	CITY OF E PROVIDENCE
0003	000	1	BRIGHTRIDGE	AVE	545	Overhead	Distribution	Luminaire	LUM HPS RWY 50W	Active	50	65485-54003	S-14	CITY OF E PROVIDENCE
0004	000	2	BRIGHTRIDGE	AVE	545	Overhead	Distribution	Luminaire	LUM HPS RWY 50W TT	Temp Turn Off	50	65485-54003	S-14	CITY OF E PROVIDENCE
0006	000	1	BRIGHTRIDGE	AVE	545	Overhead	Distribution	Luminaire	LUM HPS RWY 50W	Active	50	65485-54003	S-14	CITY OF E PROVIDENCE
0007	000	2	BRIGHTRIDGE	AVE	545	Overhead	Distribution	Luminaire	LUM HPS RWY 50W	Active	50	65485-54003	S-14	CITY OF E PROVIDENCE
0008	000	1	BRIGHTRIDGE	AVE	545	Overhead	Distribution	Luminaire	LUM HPS RWY 50W TT	Temp Turn Off	50	65485-54003	S-14	CITY OF E PROVIDENCE
0009	000	2	BRIGHTRIDGE	AVE	545	Overhead	Distribution	Luminaire	LUM HPS RWY 50W	Active	50	65485-54003	S-14	CITY OF E PROVIDENCE
0010	025	1	BRIGHTRIDGE	AVE	545	Overhead	Distribution	Luminaire	LUM HPS RWY 50W	Inactive	50	65485-54003	S-14	CITY OF E PROVIDENCE
0011	000	2	BRIGHTRIDGE	AVE	545	Overhead	Distribution	Luminaire	LUM HPS RWY 50W	Active	50	65485-54003	S-14	CITY OF E PROVIDENCE
0013	000	1	BRIGHTRIDGE	AVE	545	Overhead	Distribution	Luminaire	LUM HPS RWY 50W	Active	50	65485-54003	S-14	CITY OF E PROVIDENCE
0015	000	2	BRIGHTRIDGE	AVE	545	Overhead	Distribution	Luminaire	LUM HPS RWY 50W TT	Temp Turn Off	50	65485-54003	S-14	CITY OF E PROVIDENCE
0016	000	2	BRIGHTRIDGE	AVE	545	Overhead	Distribution	Luminaire	LUM HPS RWY 250W TT	Temp Turn Off	250	65485-54003	S-14	CITY OF E PROVIDENCE
0017	000	2	BRIGHTRIDGE	AVE	545	Overhead	Distribution	Luminaire	LUM HPS RWY 50W	Active	50	65485-54003	S-14	CITY OF E PROVIDENCE
0019	000	2	BRIGHTRIDGE	AVE	545	Overhead	Distribution	Luminaire	LUM HPS RWY 100W TT	Temp Turn Off	100	65485-54003	S-14	CITY OF E PROVIDENCE
0020	000	2	BRIGHTRIDGE	AVE	545	Overhead	Distribution	Luminaire	LUM HPS RWY 50W	Active	50	65485-54003	S-14	CITY OF E PROVIDENCE
0021	000	2	BRIGHTRIDGE	AVE	545	Overhead	Distribution	Luminaire	LUM HPS RWY 50W TT	Temp Turn Off	50	65485-54003	S-14	CITY OF E PROVIDENCE
0022	000	2	BRIGHTRIDGE	AVE	545	Overhead	Distribution	Luminaire	LUM HPS RWY 50W	Active	50	65485-54003	S-14	CITY OF E PROVIDENCE
0023	000	2	BRIGHTRIDGE	AVE	545	Overhead	Distribution	Luminaire	LUM HPS RWY 50W	Active	50	65485-54003	S-14	CITY OF E PROVIDENCE
0024	000	2	BRIGHTRIDGE	AVE	545	Overhead	Distribution	Luminaire	LUM HPS RWY 50W	Active	50	65485-54003	S-14	CITY OF E PROVIDENCE
0025	000	1	BRIGHTRIDGE	AVE	545	Overhead	Distribution	Luminaire	LUM HPS RWY 50W	Active	50	65485-54003	S-14	CITY OF E PROVIDENCE
0026	050	2	BRIGHTRIDGE	AVE	545	Overhead	Distribution	Luminaire	LUM HPS RWY 50W	Active	50	65485-54003	S-14	CITY OF E PROVIDENCE
0027	000	2	BRIGHTRIDGE	AVE	545	Overhead	Distribution	Luminaire	LUM HPS RWY 50W TT	Temp Turn Off	50	65485-54003	S-14	CITY OF E PROVIDENCE
0028	000	2	BRIGHTRIDGE	AVE	545	Overhead	Distribution	Luminaire	LUM HPS RWY 50W	Active	50	65485-54003	S-14	CITY OF E PROVIDENCE
0029	000	2	BRIGHTRIDGE	AVE	545	Overhead	Distribution	Luminaire	LUM HPS RWY 50W	Active	50	65485-54003	S-14	CITY OF E PROVIDENCE
0030	000	2	BRIGHTRIDGE	AVE	545	Overhead	Distribution	Luminaire	LUM HPS RWY 50W	Active	50	65485-54003	S-14	CITY OF E PROVIDENCE
0001	000	2	BRISTOL	AVE	550	Overhead	Distribution	Luminaire	LUM HPS RWY 50W	Active	50	65485-54003	S-14	CITY OF E PROVIDENCE
0002	000	2	BRISTOL	AVE	550	Overhead	Distribution	Luminaire	LUM HPS RWY 50W TT	Temp Turn Off	50	65485-54003	S-14	CITY OF E PROVIDENCE
0005	000	2	BRISTOL	AVE	550	Overhead	Distribution	Luminaire	LUM HPS RWY 50W	Active	50	65485-54003	S-14	CITY OF E PROVIDENCE
0003	000	1	BROAD VIEW	RD	555	Overhead	Distribution	Luminaire	LUM HPS RWY 50W	Active	50	90426-19008	S-14	CITY OF E PROVIDENCE
0004	000	2	BROAD VIEW	RD	555	Overhead	Distribution	Luminaire	LUM HPS RWY 50W	Active	50	65485-54003	S-14	CITY OF E PROVIDENCE
0006	000	2	BROAD VIEW	RD	555	Overhead	Distribution	Luminaire	LUM HPS RWY 50W	Active	50	65485-54003	S-14	CITY OF E PROVIDENCE
0008	000	2	BROAD VIEW	RD	555	Overhead	Distribution	Luminaire	LUM HPS RWY 50W	Active	50	65485-54003	S-14	CITY OF E PROVIDENCE
0009	000	2	BROAD VIEW	RD	555	Overhead	Distribution	Luminaire	LUM HPS RWY 50W TT	Temp Turn Off	50	65485-54003	S-14	CITY OF E PROVIDENCE
0010	000	2	BROAD VIEW	RD	555	Overhead	Distribution	Luminaire	LUM HPS RWY 50W TT	Temp Turn Off	50	65485-54003	S-14	CITY OF E PROVIDENCE
0011	000	2	BROAD VIEW	RD	555	Overhead	Distribution	Luminaire	LUM HPS RWY 50W	Active	50	65485-54003	S-14	CITY OF E PROVIDENCE
0012	000	2	BROAD VIEW	RD	555	Overhead	Distribution	Luminaire	LUM HPS RWY 50W	Active	50	90426-19008	S-14	CITY OF E PROVIDENCE
0013	000	1	BROAD VIEW	RD	555	Overhead	Distribution	Luminaire	LUM HPS RWY 50W	Inactive	50	65485-54003	S-14	CITY OF E PROVIDENCE
0014	000	2	BROAD VIEW	RD	555	Overhead	Distribution	Luminaire	LUM HPS RWY 50W	Active	50	65485-54003	S-14	CITY OF E PROVIDENCE
0015	000	1	BROAD VIEW	RD	555	Overhead	Distribution	Luminaire	LUM HPS RWY 50W	Inactive	50	65485-54003	S-14	CITY OF E PROVIDENCE
0002	000	1	BROADWAY	ST	560	Overhead	Distribution	Luminaire	LUM HPS RWY 250W	Inactive	250	65485-54003	S-14	CITY OF E PROVIDENCE
0002	052	1	BROADWAY	ST	560	Overhead	Distribution	Luminaire	LUM HPS RWY 250W	Inactive	250	65485-54003	S-14	CITY OF E PROVIDENCE
0003	000	2	BROADWAY	ST	560	Overhead	Distribution	Luminaire	LUM HPS RWY 250W TT	Temp Turn Off	250	65485-54003	S-14	CITY OF E PROVIDENCE
0006	001	1	BROADWAY	ST	560	Overhead	Distribution	Luminaire	LUM HPS RWY 250W	Inactive	250	65485-54003	S-14	CITY OF E PROVIDENCE
0008	000	1	BROADWAY	ST	560	Overhead	Distribution	Luminaire	LUM HPS RWY 250W	Inactive	250	65485-54003	S-14	CITY OF E PROVIDENCE
0012	000	1	BROADWAY	ST	560	Overhead	Distribution	Luminaire	LUM HPS RWY 100W	Active	100	65485-54003	S-14	CITY OF E PROVIDENCE
0013	000	1	BROADWAY	ST	560	Overhead	Distribution	Luminaire	LUM HPS RWY 100W	Active	100	65485-54003	S-14	CITY OF E PROVIDENCE
0014	050	1	BROADWAY	ST	560	Overhead	Distribution	Luminaire	LUM HPS RWY 100W	Active	100	65485-54003	S-14	CITY OF E PROVIDENCE
0017	000	2	BROADWAY	ST	560	Overhead	Distribution	Luminaire	LUM HPS RWY 100W	Active	100	65485-54003	S-14	CITY OF E PROVIDENCE

Pole No	Pole Suffix	Light Sequ No	Street Name	Street Suffix	Ngrid Line No	Source Type	Pole Use	Component Type	Bill Print and Tariff Description	Billing Status	Lamp Wattage	Account No	Rate	Customer Name
0020	000	1	BROADWAY	ST	560	Overhead	Distribution	Luminaire	LUM HPS RWY 100W	Active	100	65485-54003	S-14	CITY OF E PROVIDENCE
0023	000	1	BROADWAY	ST	560	Overhead	Distribution	Luminaire	LUM HPS RWY 100W	Active	100	65485-54003	S-14	CITY OF E PROVIDENCE
0026	000	1	BROADWAY	ST	560	Overhead	Distribution	Luminaire	LUM HPS RWY 100W	Active	100	65485-54003	S-14	CITY OF E PROVIDENCE
0029	000	1	BROADWAY	ST	560	Overhead	Distribution	Luminaire	LUM HPS RWY 100W	Active	100	65485-54003	S-14	CITY OF E PROVIDENCE
0030	000	1	BROADWAY	ST	560	Overhead	Distribution	Luminaire	LUM HPS RWY 100W	Active	100	65485-54003	S-14	CITY OF E PROVIDENCE
0033	000	1	BROADWAY	ST	560	Overhead	Distribution	Luminaire	LUM HPS RWY 100W	Active	100	65485-54003	S-14	CITY OF E PROVIDENCE
0034	000	1	BROADWAY	ST	560	Overhead	Distribution	Luminaire	LUM HPS RWY 100W	Active	100	65485-54003	S-14	CITY OF E PROVIDENCE
0036	000	1	BROADWAY	ST	560	Overhead	Distribution	Luminaire	LUM HPS RWY 100W	Active	100	65485-54003	S-14	CITY OF E PROVIDENCE
0037	000	1	BROADWAY	ST	560	Overhead	Distribution	Luminaire	LUM HPS RWY 100W	Active	100	65485-54003	S-14	CITY OF E PROVIDENCE
0041	000	4	BROADWAY	ST	560	Overhead	Distribution	Luminaire	LUM HPS RWY 250W	Inactive	250	65485-54003	S-14	CITY OF E PROVIDENCE
0047	000	4	BROADWAY	ST	560	Overhead	Distribution	Luminaire	LUM HPS RWY 250W	Inactive	250	65485-54003	S-14	CITY OF E PROVIDENCE
0048	000	2	BROADWAY	ST	560	Overhead	Distribution	Luminaire	LUM HPS RWY 250W	Active	250	65485-54003	S-14	CITY OF E PROVIDENCE
0001	000	2	BROOK	AVE	565	Overhead	Distribution	Luminaire	LUM HPS RWY 50W	Active	50	90426-19008	S-14	CITY OF E PROVIDENCE
0002	000	2	BROOK	AVE	565	Overhead	Distribution	Luminaire	LUM HPS RWY 50W	Active	50	65485-54003	S-14	CITY OF E PROVIDENCE
0003	000	2	BROOK	AVE	565	Overhead	Distribution	Luminaire	LUM HPS RWY 50W	Active	50	90426-19008	S-14	CITY OF E PROVIDENCE
0004	000	2	BROOK	AVE	565	Overhead	Distribution	Luminaire	LUM HPS RWY 50W	Active	50	65485-54003	S-14	CITY OF E PROVIDENCE
0006	000	2	BROOK	AVE	565	Overhead	Distribution	Luminaire	LUM HPS RWY 50W	Active	50	65485-54003	S-14	CITY OF E PROVIDENCE
0009	000	2	BROOK	AVE	565	Overhead	Distribution	Luminaire	LUM HPS RWY 50W	Active	50	65485-54003	S-14	CITY OF E PROVIDENCE
0001	000	2	BROOKFIELD	CT	575	Overhead	Distribution	Luminaire	LUM HPS RWY 50W	Active	50	65485-54003	S-14	CITY OF E PROVIDENCE
0002	000	2	BROOKFIELD	CT	575	Overhead	Distribution	Luminaire	LUM HPS RWY 50W	Active	50	90426-19008	S-14	CITY OF E PROVIDENCE
0003	000	2	BROOKFIELD	CT	575	Overhead	Distribution	Luminaire	LUM HPS RWY 100W	Active	100	65485-54003	S-14	CITY OF E PROVIDENCE
0001	000	2	BROOKFIELD	RD	580	Overhead	Distribution	Luminaire	LUM HPS RWY 50W	Active	50	65485-54003	S-14	CITY OF E PROVIDENCE
0002	000	2	BROOKFIELD	RD	580	Overhead	Distribution	Luminaire	LUM HPS RWY 50W	Active	50	65485-54003	S-14	CITY OF E PROVIDENCE
0003	000	2	BROOKFIELD	RD	580	Overhead	Distribution	Luminaire	LUM HPS RWY 50W	Active	50	65485-54003	S-14	CITY OF E PROVIDENCE
0005	000	2	BROOKFIELD	RD	580	Overhead	Distribution	Luminaire	LUM HPS RWY 50W	Active	50	65485-54003	S-14	CITY OF E PROVIDENCE
0007	000	2	BROOKFIELD	RD	580	Overhead	Distribution	Luminaire	LUM HPS RWY 50W	Active	50	65485-54003	S-14	CITY OF E PROVIDENCE
0009	000	2	BROOKFIELD	RD	580	Overhead	Distribution	Luminaire	LUM HPS RWY 50W	Active	50	65485-54003	S-14	CITY OF E PROVIDENCE
0011	000	2	BROOKFIELD	RD	580	Overhead	Distribution	Luminaire	LUM HPS RWY 50W	Active	50	65485-54003	S-14	CITY OF E PROVIDENCE
0002	000	2	BROOKHAVEN	DR	570	Overhead	Distribution	Luminaire	LUM HPS RWY 50W	Active	50	65485-54003	S-14	CITY OF E PROVIDENCE
0004	000	2	BROOKHAVEN	DR	570	Overhead	Distribution	Luminaire	LUM HPS RWY 50W	Active	50	65485-54003	S-14	CITY OF E PROVIDENCE
0006	000	2	BROOKHAVEN	DR	570	Overhead	Distribution	Luminaire	LUM HPS RWY 50W	Active	50	65485-54003	S-14	CITY OF E PROVIDENCE
0008	000	2	BROOKHAVEN	DR	570	Overhead	Distribution	Luminaire	LUM HPS RWY 50W	Active	50	65485-54003	S-14	CITY OF E PROVIDENCE
0010	000	2	BROOKHAVEN	DR	570	Overhead	Distribution	Luminaire	LUM HPS RWY 50W	Active	50	65485-54003	S-14	CITY OF E PROVIDENCE
0001	000	2	BROWN	ST	590	Overhead	Distribution	Luminaire	LUM HPS RWY 50W	Active	50	65485-54003	S-14	CITY OF E PROVIDENCE
0002	000	2	BROWN	ST	590	Overhead	Distribution	Luminaire	LUM HPS RWY 50W	Active	50	65485-54003	S-14	CITY OF E PROVIDENCE
0005	000	2	BROWN	ST	590	Overhead	Distribution	Luminaire	LUM HPS RWY 50W	Active	50	65485-54003	S-14	CITY OF E PROVIDENCE
0007	000	2	BROWN	ST	590	Overhead	Distribution	Luminaire	LUM HPS RWY 50W TT	Temp Turn Off	50	65485-54003	S-14	CITY OF E PROVIDENCE
0008	000	2	BROWN	ST	590	Overhead	Distribution	Luminaire	LUM HPS RWY 50W	Active	50	65485-54003	S-14	CITY OF E PROVIDENCE
0009	000	2	BROWN	ST	590	Overhead	Distribution	Luminaire	LUM HPS RWY 50W	Active	50	65485-54003	S-14	CITY OF E PROVIDENCE
0010	000	2	BROWN	ST	590	Overhead	Distribution	Luminaire	LUM HPS RWY 50W	Active	50	65485-54003	S-14	CITY OF E PROVIDENCE
0011	000	2	BROWN	ST	590	Overhead	Distribution	Luminaire	LUM HPS RWY 50W	Active	50	65485-54003	S-14	CITY OF E PROVIDENCE
0012	000	1	BROWN	ST	590	Overhead	Distribution	Luminaire	LUM HPS RWY 50W	Active	50	65485-54003	S-14	CITY OF E PROVIDENCE
0013	000	2	BROWN	ST	590	Overhead	Distribution	Luminaire	LUM HPS RWY 50W	Active	50	65485-54003	S-14	CITY OF E PROVIDENCE
0014	000	2	BROWN	ST	590	Overhead	Distribution	Luminaire	LUM HPS RWY 50W TT	Temp Turn Off	50	65485-54003	S-14	CITY OF E PROVIDENCE
0016	000	2	BROWN	ST	590	Overhead	Distribution	Luminaire	LUM HPS RWY 50W	Active	50	65485-54003	S-14	CITY OF E PROVIDENCE
0017	000	2	BROWN	ST	590	Overhead	Distribution	Luminaire	LUM HPS RWY 50W TT	Temp Turn Off	50	65485-54003	S-14	CITY OF E PROVIDENCE
0018	000	2	BROWN	ST	590	Overhead	Distribution	Luminaire	LUM HPS RWY 50W	Active	50	65485-54003	S-14	CITY OF E PROVIDENCE
0020	000	2	BROWN	ST	590	Overhead	Distribution	Luminaire	LUM HPS RWY 50W	Active	50	65485-54003	S-14	CITY OF E PROVIDENCE
0023	000	2	BROWN	ST	590	Overhead	Distribution	Luminaire	LUM HPS RWY 50W	Active	50	65485-54003	S-14	CITY OF E PROVIDENCE
0026	000	2	BROWN	ST	590	Overhead	Distribution	Luminaire	LUM HPS RWY 50W	Active	50	65485-54003	S-14	CITY OF E PROVIDENCE
0028	000	2	BROWN	ST	590	Overhead	Distribution	Luminaire	LUM HPS RWY 50W	Active	50	65485-54003	S-14	CITY OF E PROVIDENCE
0030	000	2	BROWN	ST	590	Overhead	Distribution	Luminaire	LUM HPS RWY 50W TT	Temp Turn Off	50	65485-54003	S-14	CITY OF E PROVIDENCE
0032	000	2	BROWN	ST	590	Overhead	Distribution	Luminaire	LUM HPS RWY 50W TT	Temp Turn Off	50	65485-54003	S-14	CITY OF E PROVIDENCE
0001	000	2	BRUNSWICK	ST	595	Overhead	Distribution	Luminaire	LUM HPS RWY 50W TT	Temp Turn Off	50	65485-54003	S-14	CITY OF E PROVIDENCE
0002	000	2	BRUNSWICK	ST	595	Overhead	Distribution	Luminaire	LUM HPS RWY 50W	Active	50	65485-54003	S-14	CITY OF E PROVIDENCE

Pole No	Pole Suffix	Light Sequ No	Street Name	Street Suffix	Ngrid Line No	Source Type	Pole Use	Component Type	Bill Print and Tariff Description	Billing Status	Lamp Wattage	Account No	Rate	Customer Name
0004	000	2	BRUNSWICK	ST	595	Overhead	Distribution	Luminaire	LUM HPS RWY 50W	Active	50	65485-54003	S-14	CITY OF E PROVIDENCE
0005	000	2	BRUNSWICK	ST	595	Overhead	Distribution	Luminaire	LUM HPS RWY 50W	Active	50	65485-54003	S-14	CITY OF E PROVIDENCE
0006	000	2	BRUNSWICK	ST	595	Overhead	Distribution	Luminaire	LUM HPS RWY 50W	Active	50	90426-19008	S-14	CITY OF E PROVIDENCE
0002	000	2	BUCK THORNE	AVE	605	Overhead	Distribution	Luminaire	LUM HPS RWY 50W	Active	50	65485-54003	S-14	CITY OF E PROVIDENCE
0005	000	2	BUCK THORNE	AVE	605	Overhead	Distribution	Luminaire	LUM HPS RWY 50W	Active	50	65485-54003	S-14	CITY OF E PROVIDENCE
0006	000	2	BUCK THORNE	AVE	605	Overhead	Distribution	Luminaire	LUM HPS RWY 50W TT	Temp Turn Off	50	90426-19008	S-14	CITY OF E PROVIDENCE
0008	000	2	BUCK THORNE	AVE	605	Overhead	Distribution	Luminaire	LUM HPS RWY 50W	Active	50	90426-19008	S-14	CITY OF E PROVIDENCE
0009	000	2	BUCK THORNE	AVE	605	Overhead	Distribution	Luminaire	LUM HPS RWY 50W	Active	50	90426-19008	S-14	CITY OF E PROVIDENCE
0225	000	1	BULLOCKS POINT	AVE	610	Overhead	Distribution	Luminaire	LUM HPS RWY 100W	Active	100	65485-54003	S-14	CITY OF E PROVIDENCE
0229	000	1	BULLOCKS POINT	AVE	610	Overhead	Distribution	Luminaire	LUM HPS RWY 100W	Inactive	100	65485-54003	S-14	CITY OF E PROVIDENCE
0235	000	1	BULLOCKS POINT	AVE	610	Overhead	Distribution	Luminaire	LUM HPS RWY 100W	Active	100	65485-54003	S-14	CITY OF E PROVIDENCE
0239	000	1	BULLOCKS POINT	AVE	610	Overhead	Distribution	Luminaire	LUM HPS RWY 100W	Active	100	65485-54003	S-14	CITY OF E PROVIDENCE
0240	000	2	BULLOCKS POINT	AVE	610	Overhead	Distribution	Luminaire	LUM MV RWY 175W	Red Cap Perm	175	0-	S-10	Inactive
0243	000	1	BULLOCKS POINT	AVE	610	Overhead	Distribution	Luminaire	LUM HPS RWY 100W	Active	100	65485-54003	S-14	CITY OF E PROVIDENCE
0243	050	1	BULLOCKS POINT	AVE	610	Overhead	Distribution	Luminaire	LUM HPS RWY 250W	Active	250	65485-54003	S-14	CITY OF E PROVIDENCE
0245	000	2	BULLOCKS POINT	AVE	610	Overhead	Distribution	Luminaire	LUM HPS RWY 250W TT	Temp Turn Off	250	65485-54003	S-14	CITY OF E PROVIDENCE
0247	000	1	BULLOCKS POINT	AVE	610	Overhead	Distribution	Luminaire	LUM HPS RWY 100W	Active	100	65485-54003	S-14	CITY OF E PROVIDENCE
0249	000	2	BULLOCKS POINT	AVE	610	Overhead	Distribution	Luminaire	LUM HPS RWY 400W TT	Temp Turn Off	400	65485-54003	S-14	CITY OF E PROVIDENCE
0251	000	1	BULLOCKS POINT	AVE	610	Overhead	Distribution	Luminaire	LUM HPS RWY 250W TT	Temp Turn Off	250	65485-54003	S-14	CITY OF E PROVIDENCE
0252	000	1	BULLOCKS POINT	AVE	610	Overhead	Distribution	Luminaire	LUM HPS RWY 100W	Active	100	65485-54003	S-14	CITY OF E PROVIDENCE
0255	000	1	BULLOCKS POINT	AVE	610	Overhead	Distribution	Luminaire	LUM HPS RWY 100W	Active	100	65485-54003	S-14	CITY OF E PROVIDENCE
0261	000	1	BULLOCKS POINT	AVE	610	Overhead	Distribution	Luminaire	LUM HPS RWY 100W	Active	100	65485-54003	S-14	CITY OF E PROVIDENCE
0263	000	1	BULLOCKS POINT	AVE	610	Overhead	Distribution	Luminaire	LUM HPS RWY 100W	Inactive	100	65485-54003	S-14	CITY OF E PROVIDENCE
0265	000	1	BULLOCKS POINT	AVE	610	Overhead	Distribution	Luminaire	LUM HPS RWY 250W	Active	250	65485-54003	S-14	CITY OF E PROVIDENCE
0267	000	2	BULLOCKS POINT	AVE	610	Overhead	Distribution	Luminaire	LUM HPS RWY 400W TT	Temp Turn Off	400	65485-54003	S-14	CITY OF E PROVIDENCE
0271	000	2	BULLOCKS POINT	AVE	610	Overhead	Distribution	Luminaire	LUM HPS RWY 400W TT	Temp Turn Off	400	65485-54003	S-14	CITY OF E PROVIDENCE
0273	000	1	BULLOCKS POINT	AVE	610	Overhead	Distribution	Luminaire	LUM HPS RWY 100W	Active	100	65485-54003	S-14	CITY OF E PROVIDENCE
0274	000	1	BULLOCKS POINT	AVE	610	Overhead	Distribution	Luminaire	LUM HPS RWY 100W	Active	100	65485-54003	S-14	CITY OF E PROVIDENCE
0276	000	1	BULLOCKS POINT	AVE	610	Overhead	Distribution	Luminaire	LUM HPS RWY 250W TT	Temp Turn Off	250	65485-54003	S-14	CITY OF E PROVIDENCE
0279	000	1	BULLOCKS POINT	AVE	610	Overhead	Distribution	Luminaire	LUM HPS RWY 100W	Active	100	65485-54003	S-14	CITY OF E PROVIDENCE
0281	050	1	BULLOCKS POINT	AVE	610	Overhead	Distribution	Luminaire	LUM HPS RWY 100W	Active	100	65485-54003	S-14	CITY OF E PROVIDENCE
0282	000	2	BULLOCKS POINT	AVE	610	Overhead	Distribution	Luminaire	LUM HPS RWY 400W TT	Temp Turn Off	400	65485-54003	S-14	CITY OF E PROVIDENCE
0283	000	1	BULLOCKS POINT	AVE	610	Overhead	Distribution	Luminaire	LUM HPS RWY 100W	Active	100	65485-54003	S-14	CITY OF E PROVIDENCE
0286	000	1	BULLOCKS POINT	AVE	610	Overhead	Distribution	Luminaire	LUM HPS RWY 250W	Inactive	250	65485-54003	S-14	CITY OF E PROVIDENCE
0287	000	2	BULLOCKS POINT	AVE	610	Overhead	Distribution	Luminaire	LUM HPS RWY 250W TT	Temp Turn Off	250	65485-54003	S-14	CITY OF E PROVIDENCE
0288	000	1	BULLOCKS POINT	AVE	610	Overhead	Distribution	Luminaire	LUM HPS RWY 100W	Active	100	65485-54003	S-14	CITY OF E PROVIDENCE
0289	050	1	BULLOCKS POINT	AVE	610	Overhead	Distribution	Luminaire	LUM HPS RWY 100W	Active	100	65485-54003	S-14	CITY OF E PROVIDENCE
0290	000	1	BULLOCKS POINT	AVE	610	Overhead	Distribution	Luminaire	LUM HPS RWY 100W	Active	100	65485-54003	S-14	CITY OF E PROVIDENCE
0293	000	1	BULLOCKS POINT	AVE	610	Overhead	Distribution	Luminaire	LUM HPS FLD 250W	Inactive	250	65485-54003	S-14	CITY OF E PROVIDENCE
0294	000	1	BULLOCKS POINT	AVE	610	Overhead	Distribution	Luminaire	LUM HPS RWY 100W	Active	100	65485-54003	S-14	CITY OF E PROVIDENCE
0295	000	2	BULLOCKS POINT	AVE	610	Overhead	Distribution	Luminaire	LUM HPS RWY 400W TT	Temp Turn Off	400	65485-54003	S-14	CITY OF E PROVIDENCE
0297	000	2	BULLOCKS POINT	AVE	610	Overhead	Distribution	Luminaire	LUM HPS RWY 250W	Active	250	65485-54003	S-14	CITY OF E PROVIDENCE
0300	000	1	BULLOCKS POINT	AVE	610	Overhead	Distribution	Luminaire	LUM HPS RWY 100W	Active	100	65485-54003	S-14	CITY OF E PROVIDENCE
0303	000	1	BULLOCKS POINT	AVE	610	Overhead	Distribution	Luminaire	LUM HPS RWY 100W	Active	100	65485-54003	S-14	CITY OF E PROVIDENCE
0311	000	1	BULLOCKS POINT	AVE	610	Overhead	Distribution	Luminaire	LUM HPS RWY 100W	Active	100	65485-54003	S-14	CITY OF E PROVIDENCE
0314	000	1	BULLOCKS POINT	AVE	610	Overhead	Distribution	Luminaire	LUM HPS RWY 100W	Active	100	65485-54003	S-14	CITY OF E PROVIDENCE
0317	050	1	BULLOCKS POINT	AVE	610	Overhead	Distribution	Luminaire	LUM HPS RWY 100W	Inactive	100	65485-54003	S-14	CITY OF E PROVIDENCE
0320	000	1	BULLOCKS POINT	AVE	610	Overhead	Distribution	Luminaire	LUM HPS RWY 100W	Active	100	65485-54003	S-14	CITY OF E PROVIDENCE
0325	000	2	BULLOCKS POINT	AVE	610	Overhead	Distribution	Luminaire	LUM HPS RWY 250W TT	Temp Turn Off	250	65485-54003	S-14	CITY OF E PROVIDENCE
0328	000	1	BULLOCKS POINT	AVE	610	Overhead	Distribution	Luminaire	LUM HPS RWY 100W	Active	100	65485-54003	S-14	CITY OF E PROVIDENCE
0331	000	1	BULLOCKS POINT	AVE	610	Overhead	Distribution	Luminaire	LUM HPS RWY 100W	Active	100	65485-54003	S-14	CITY OF E PROVIDENCE
0335	000	1	BULLOCKS POINT	AVE	610	Overhead	Distribution	Luminaire	LUM HPS RWY 100W	Active	100	65485-54003	S-14	CITY OF E PROVIDENCE
0336	000	2	BULLOCKS POINT	AVE	610	Overhead	Distribution	Luminaire	LUM HPS RWY 250W TT	Temp Turn Off	250	65485-54003	S-14	CITY OF E PROVIDENCE
0339	000	1	BULLOCKS POINT	AVE	610	Overhead	Distribution	Luminaire	LUM HPS RWY 100W	Active	100	65485-54003	S-14	CITY OF E PROVIDENCE
0343	000	2	BULLOCKS POINT	AVE	610	Overhead	Distribution	Luminaire	LUM HPS RWY 250W	Active	250	65485-54003	S-14	CITY OF E PROVIDENCE

Pole No	Pole Suffix	Light Sequ No	Street Name	Street Suffix	Ngrid Line No	Source Type	Pole Use	Component Type	Bill Print and Tariff Description	Billing Status	Lamp Wattage	Account No	Rate	Customer Name
0345	000	1	BULLOCKS POINT	AVE	610	Overhead	Distribution	Luminaire	LUM HPS RWY 100W	Active	100	65485-54003	S-14	CITY OF E PROVIDENCE
0347	000	1	BULLOCKS POINT	AVE	610	Overhead	Distribution	Luminaire	LUM HPS RWY 100W	Active	100	65485-54003	S-14	CITY OF E PROVIDENCE
0351	000	1	BULLOCKS POINT	AVE	610	Overhead	Distribution	Luminaire	LUM HPS RWY 100W	Active	100	65485-54003	S-14	CITY OF E PROVIDENCE
0355	000	2	BULLOCKS POINT	AVE	610	Overhead	Distribution	Luminaire	LUM HPS RWY 250W TT	Temp Turn Off	250	65485-54003	S-14	CITY OF E PROVIDENCE
0358	000	1	BULLOCKS POINT	AVE	610	Overhead	Distribution	Luminaire	LUM HPS RWY 250W	Inactive	250	65485-54003	S-14	CITY OF E PROVIDENCE
0359	000	1	BULLOCKS POINT	AVE	610	Overhead	Distribution	Luminaire	LUM HPS RWY 100W	Active	100	65485-54003	S-14	CITY OF E PROVIDENCE
0363	000	2	BULLOCKS POINT	AVE	610	Overhead	Distribution	Luminaire	LUM HPS RWY 250W TT	Temp Turn Off	250	65485-54003	S-14	CITY OF E PROVIDENCE
0365	000	1	BULLOCKS POINT	AVE	610	Overhead	Distribution	Luminaire	LUM HPS RWY 100W	Active	100	65485-54003	S-14	CITY OF E PROVIDENCE
0366	000	1	BULLOCKS POINT	AVE	610	Overhead	Distribution	Luminaire	LUM HPS RWY 100W	Active	100	65485-54003	S-14	CITY OF E PROVIDENCE
0369	000	2	BULLOCKS POINT	AVE	610	Overhead	Distribution	Luminaire	LUM HPS RWY 250W TT	Temp Turn Off	250	65485-54003	S-14	CITY OF E PROVIDENCE
0373	000	1	BULLOCKS POINT	AVE	610	Overhead	Distribution	Luminaire	LUM HPS RWY 100W	Active	100	65485-54003	S-14	CITY OF E PROVIDENCE
0377	000	2	BULLOCKS POINT	AVE	610	Overhead	Distribution	Luminaire	LUM HPS RWY 250W TT	Temp Turn Off	250	65485-54003	S-14	CITY OF E PROVIDENCE
0377	050	1	BULLOCKS POINT	AVE	610	Overhead	Distribution	Luminaire	LUM HPS RWY 250W	Inactive	250	65485-54003	S-14	CITY OF E PROVIDENCE
0379	000	1	BULLOCKS POINT	AVE	610	Overhead	Distribution	Luminaire	LUM HPS RWY 100W	Active	100	65485-54003	S-14	CITY OF E PROVIDENCE
0381	000	2	BULLOCKS POINT	AVE	610	Overhead	Distribution	Luminaire	LUM HPS RWY 250W TT	Temp Turn Off	250	90426-19008	S-14	CITY OF E PROVIDENCE
0383	000	1	BULLOCKS POINT	AVE	610	Overhead	Distribution	Luminaire	LUM HPS RWY 100W	Active	100	65485-54003	S-14	CITY OF E PROVIDENCE
0385	000	1	BULLOCKS POINT	AVE	610	Overhead	Distribution	Luminaire	LUM HPS RWY 100W	Active	100	65485-54003	S-14	CITY OF E PROVIDENCE
0387	000	2	BULLOCKS POINT	AVE	610	Overhead	Distribution	Luminaire	LUM HPS RWY 250W TT	Temp Turn Off	250	65485-54003	S-14	CITY OF E PROVIDENCE
0389	000	1	BULLOCKS POINT	AVE	610	Overhead	Distribution	Luminaire	LUM HPS RWY 50W	Active	50	65485-54003	S-14	CITY OF E PROVIDENCE
0391	000	2	BULLOCKS POINT	AVE	610	Overhead	Distribution	Luminaire	LUM HPS RWY 250W TT	Temp Turn Off	250	65485-54003	S-14	CITY OF E PROVIDENCE
0392	050	1	BULLOCKS POINT	AVE	610	Overhead	Distribution	Luminaire	LUM HPS RWY 50W	Active	50	65485-54003	S-14	CITY OF E PROVIDENCE
0392	050	2	BULLOCKS POINT	AVE	610	Overhead	Distribution	Luminaire	LUM HPS FLD 400W	Inactive	400	65485-54003	S-14	CITY OF E PROVIDENCE
0393	000	1	BULLOCKS POINT	AVE	610	Overhead	Distribution	Luminaire	LUM HPS RWY 50W	Active	50	65485-54003	S-14	CITY OF E PROVIDENCE
0395	000	2	BULLOCKS POINT	AVE	610	Overhead	Distribution	Luminaire	LUM HPS RWY 250W TT	Temp Turn Off	250	65485-54003	S-14	CITY OF E PROVIDENCE
0397	000	1	BULLOCKS POINT	AVE	610	Overhead	Distribution	Luminaire	LUM HPS RWY 250W	Inactive	250	65485-54003	S-14	CITY OF E PROVIDENCE
0397	000	2	BULLOCKS POINT	AVE	610	Overhead	Distribution	Luminaire	LUM HPS FLD 400W	Inactive	400	65485-54003	S-14	CITY OF E PROVIDENCE
0402	000	1	BULLOCKS POINT	AVE	610	Overhead	Distribution	Luminaire	LUM HPS RWY 50W	Active	50	65485-54003	S-14	CITY OF E PROVIDENCE
0402	000	3	BULLOCKS POINT	AVE	610	Overhead	Distribution	Luminaire	LUM HPS FLD 400W	Active	400	40565-89009	S-14	CITY OF EAST PROVIDENCE
0408	000	1	BULLOCKS POINT	AVE	610	Overhead	Distribution	Luminaire	LUM HPS RWY 250W	Inactive	250	65485-54003	S-14	CITY OF E PROVIDENCE
0410	000	1	BULLOCKS POINT	AVE	610	Overhead	Distribution	Luminaire	LUM HPS RWY 250W	Inactive	250	65485-54003	S-14	CITY OF E PROVIDENCE
0411	000	1	BULLOCKS POINT	AVE	610	Overhead	Distribution	Luminaire	LUM HPS RWY 50W	Active	50	65485-54003	S-14	CITY OF E PROVIDENCE
0412	000	1	BULLOCKS POINT	AVE	610	Overhead	Distribution	Luminaire	LUM HPS RWY 250W	Inactive	250	65485-54003	S-14	CITY OF E PROVIDENCE
0413	000	1	BULLOCKS POINT	AVE	610	Overhead	Distribution	Luminaire	LUM HPS RWY 50W	Active	50	65485-54003	S-14	CITY OF E PROVIDENCE
0414	000	2	BULLOCKS POINT	AVE	610	Overhead	Distribution	Luminaire	LUM HPS RWY 250W TT	Temp Turn Off	250	90426-19008	S-14	CITY OF E PROVIDENCE
0416	000	1	BULLOCKS POINT	AVE	610	Overhead	Distribution	Luminaire	LUM HPS RWY 100W	Active	100	65485-54003	S-14	CITY OF E PROVIDENCE
0418	000	2	BULLOCKS POINT	AVE	610	Overhead	Distribution	Luminaire	LUM HPS RWY 50W TT	Temp Turn Off	50	90426-19008	S-14	CITY OF E PROVIDENCE
0420	000	2	BULLOCKS POINT	AVE	610	Overhead	Distribution	Luminaire	LUM HPS RWY 50W	Active	50	65485-54003	S-14	CITY OF E PROVIDENCE
0422	000	2	BULLOCKS POINT	AVE	610	Overhead	Distribution	Luminaire	LUM HPS RWY 50W	Active	50	65485-54003	S-14	CITY OF E PROVIDENCE
0423	000	2	BULLOCKS POINT	AVE	610	Overhead	Distribution	Luminaire	LUM HPS RWY 50W	Active	50	90426-19008	S-14	CITY OF E PROVIDENCE
0425	000	2	BULLOCKS POINT	AVE	610	Overhead	Distribution	Luminaire	LUM HPS RWY 50W	Active	50	90426-19008	S-14	CITY OF E PROVIDENCE
0427	000	2	BULLOCKS POINT	AVE	610	Overhead	Distribution	Luminaire	LUM HPS RWY 50W	Active	50	90426-19008	S-14	CITY OF E PROVIDENCE
0428	000	2	BULLOCKS POINT	AVE	610	Overhead	Distribution	Luminaire	LUM HPS RWY 50W	Active	50	90426-19008	S-14	CITY OF E PROVIDENCE
0430	000	2	BULLOCKS POINT	AVE	610	Overhead	Distribution	Luminaire	LUM HPS RWY 50W	Active	50	90426-19008	S-14	CITY OF E PROVIDENCE
0432	050	2	BULLOCKS POINT	AVE	610	Overhead	Distribution	Luminaire	LUM HPS RWY 50W	Active	50	90426-19008	S-14	CITY OF E PROVIDENCE
0434	000	2	BULLOCKS POINT	AVE	610	Overhead	Distribution	Luminaire	LUM HPS RWY 50W	Active	50	90426-19008	S-14	CITY OF E PROVIDENCE
0435	000	1	BULLOCKS POINT	AVE	610	Overhead	Distribution	Luminaire	LUM HPS RWY 50W	Inactive	50	65485-54003	S-14	CITY OF E PROVIDENCE
0001	000	2	BURGESS	AVE	615	Overhead	Distribution	Luminaire	LUM HPS RWY 50W	Active	50	65485-54003	S-14	CITY OF E PROVIDENCE
0003	000	2	BURGESS	AVE	615	Overhead	Distribution	Luminaire	LUM HPS RWY 100W TT	Temp Turn Off	100	65485-54003	S-14	CITY OF E PROVIDENCE
0004	000	1	BURGESS	AVE	615	Overhead	Distribution	Luminaire	LUM HPS RWY 50W	Inactive	50	65485-54003	S-14	CITY OF E PROVIDENCE
0005	000	2	BURGESS	AVE	615	Overhead	Distribution	Luminaire	LUM HPS RWY 100W TT	Temp Turn Off	100	65485-54003	S-14	CITY OF E PROVIDENCE
0008	000	2	BURGESS	AVE	615	Overhead	Distribution	Luminaire	LUM HPS RWY 50W	Active	50	65485-54003	S-14	CITY OF E PROVIDENCE
0010	000	2	BURGESS	AVE	615	Overhead	Distribution	Luminaire	LUM HPS RWY 50W	Active	50	65485-54003	S-14	CITY OF E PROVIDENCE
0012	000	2	BURGESS	AVE	615	Overhead	Distribution	Luminaire	LUM HPS RWY 50W	Active	50	65485-54003	S-14	CITY OF E PROVIDENCE
0013	000	2	BURGESS	AVE	615	Overhead	Distribution	Luminaire	LUM HPS RWY 50W TT	Temp Turn Off	50	65485-54003	S-14	CITY OF E PROVIDENCE
0015	000	2	BURGESS	AVE	615	Overhead	Distribution	Luminaire	LUM HPS RWY 50W	Active	50	65485-54003	S-14	CITY OF E PROVIDENCE

Pole No	Pole Suffix	Light Sequ No	Street Name	Street Suffix	Ngrid Line No	Source Type	Pole Use	Component Type	Bill Print and Tariff Description	Billing Status	Lamp Wattage	Account No	Rate	Customer Name
0017	000	2	BURGESS	AVE	615	Overhead	Distribution	Luminaire	LUM HPS RWY 50W	Active	50	65485-54003	S-14	CITY OF E PROVIDENCE
0018	050	2	BURGESS	AVE	615	Overhead	Distribution	Luminaire	LUM HPS RWY 50W TT	Temp Turn Off	50	65485-54003	S-14	CITY OF E PROVIDENCE
0020	000	2	BURGESS	AVE	615	Overhead	Distribution	Luminaire	LUM HPS RWY 50W	Active	50	65485-54003	S-14	CITY OF E PROVIDENCE
0022	000	2	BURGESS	AVE	615	Overhead	Distribution	Luminaire	LUM HPS RWY 50W	Active	50	65485-54003	S-14	CITY OF E PROVIDENCE
0024	000	2	BURGESS	AVE	615	Overhead	Distribution	Luminaire	LUM HPS RWY 50W	Active	50	65485-54003	S-14	CITY OF E PROVIDENCE
0026	000	2	BURGESS	AVE	615	Overhead	Distribution	Luminaire	LUM HPS RWY 50W	Active	50	65485-54003	S-14	CITY OF E PROVIDENCE
0027	000	2	BURGESS	AVE	615	Overhead	Distribution	Luminaire	LUM HPS RWY 50W TT	Temp Turn Off	50	65485-54003	S-14	CITY OF E PROVIDENCE
0029	000	2	BURGESS	AVE	615	Overhead	Distribution	Luminaire	LUM HPS RWY 50W	Active	50	65485-54003	S-14	CITY OF E PROVIDENCE
0002	000	2	BURKE	ST	620	Overhead	Distribution	Luminaire	LUM HPS RWY 50W	Active	50	65485-54003	S-14	CITY OF E PROVIDENCE
0005	000	2	BURKE	ST	620	Overhead	Distribution	Luminaire	LUM HPS RWY 50W	Active	50	65485-54003	S-14	CITY OF E PROVIDENCE
0001	000	1	BURNSIDE	AVE	630	Overhead	Distribution	Luminaire	LUM HPS RWY 50W	Active	50	65485-54003	S-14	CITY OF E PROVIDENCE
0002	000	2	BURNSIDE	AVE	630	Overhead	Distribution	Luminaire	LUM HPS RWY 100W TT	Temp Turn Off	100	65485-54003	S-14	CITY OF E PROVIDENCE
0003	000	1	BURNSIDE	AVE	630	Overhead	Distribution	Luminaire	LUM HPS RWY 50W	Active	50	65485-54003	S-14	CITY OF E PROVIDENCE
0004	000	2	BURNSIDE	AVE	630	Overhead	Distribution	Luminaire	LUM HPS RWY 100W TT	Temp Turn Off	100	65485-54003	S-14	CITY OF E PROVIDENCE
0005	000	1	BURNSIDE	AVE	630	Overhead	Distribution	Luminaire	LUM HPS RWY 50W	Active	50	65485-54003	S-14	CITY OF E PROVIDENCE
0006	000	2	BURNSIDE	AVE	630	Overhead	Distribution	Luminaire	LUM HPS RWY 50W TT	Temp Turn Off	50	65485-54003	S-14	CITY OF E PROVIDENCE
0007	000	2	BURNSIDE	AVE	630	Overhead	Distribution	Luminaire	LUM HPS RWY 50W	Active	50	65485-54003	S-14	CITY OF E PROVIDENCE
0008	000	2	BURNSIDE	AVE	630	Overhead	Distribution	Luminaire	LUM HPS RWY 50W TT	Temp Turn Off	50	65485-54003	S-14	CITY OF E PROVIDENCE
0009	000	1	BURNSIDE	AVE	630	Overhead	Distribution	Luminaire	LUM HPS RWY 50W	Active	50	65485-54003	S-14	CITY OF E PROVIDENCE
0010	000	2	BURNSIDE	AVE	630	Overhead	Distribution	Luminaire	LUM HPS RWY 50W TT	Temp Turn Off	50	65485-54003	S-14	CITY OF E PROVIDENCE
0011	000	2	BURNSIDE	AVE	630	Overhead	Distribution	Luminaire	LUM HPS RWY 50W TT	Temp Turn Off	50	65485-54003	S-14	CITY OF E PROVIDENCE
0012	000	2	BURNSIDE	AVE	630	Overhead	Distribution	Luminaire	LUM HPS RWY 50W	Active	50	65485-54003	S-14	CITY OF E PROVIDENCE
0013	000	1	BURNSIDE	AVE	630	Overhead	Distribution	Luminaire	LUM HPS RWY 50W	Active	50	65485-54003	S-14	CITY OF E PROVIDENCE
0014	000	2	BURNSIDE	AVE	630	Overhead	Distribution	Luminaire	LUM HPS RWY 50W TT	Temp Turn Off	50	65485-54003	S-14	CITY OF E PROVIDENCE
0015	000	2	BURNSIDE	AVE	630	Overhead	Distribution	Luminaire	LUM HPS RWY 50W	Active	50	65485-54003	S-14	CITY OF E PROVIDENCE
0017	000	2	BURNSIDE	AVE	630	Overhead	Distribution	Luminaire	LUM HPS RWY 50W TT	Temp Turn Off	50	65485-54003	S-14	CITY OF E PROVIDENCE
0018	000	1	BURNSIDE	AVE	630	Overhead	Distribution	Luminaire	LUM HPS RWY 50W	Active	50	65485-54003	S-14	CITY OF E PROVIDENCE
0019	000	2	BURNSIDE	AVE	630	Overhead	Distribution	Luminaire	LUM HPS RWY 50W TT	Temp Turn Off	50	65485-54003	S-14	CITY OF E PROVIDENCE
0022	000	2	BURNSIDE	AVE	630	Overhead	Distribution	Luminaire	LUM HPS RWY 50W TT	Temp Turn Off	50	65485-54003	S-14	CITY OF E PROVIDENCE
0024	000	2	BURNSIDE	AVE	630	Overhead	Distribution	Luminaire	LUM HPS RWY 50W TT	Temp Turn Off	50	65485-54003	S-14	CITY OF E PROVIDENCE
0025	000	2	BURNSIDE	AVE	630	Overhead	Distribution	Luminaire	LUM HPS RWY 50W	Active	50	65485-54003	S-14	CITY OF E PROVIDENCE
0027	000	2	BURNSIDE	AVE	630	Overhead	Distribution	Luminaire	LUM HPS RWY 50W	Active	50	65485-54003	S-14	CITY OF E PROVIDENCE
0029	000	2	BURNSIDE	AVE	630	Overhead	Distribution	Luminaire	LUM HPS RWY 50W	Active	50	65485-54003	S-14	CITY OF E PROVIDENCE
0029	011	2	BURNSIDE	AVE	630	Overhead	Distribution	Luminaire	LUM HPS RWY 50W	Active	50	65485-54003	S-14	CITY OF E PROVIDENCE
0001	000	2	BURTON	AVE	640	Overhead	Distribution	Luminaire	LUM HPS RWY 50W	Active	50	65485-54003	S-14	CITY OF E PROVIDENCE
0003	000	2	BURTON	AVE	640	Overhead	Distribution	Luminaire	LUM HPS RWY 50W	Active	50	65485-54003	S-14	CITY OF E PROVIDENCE
0005	000	2	BURTON	AVE	640	Overhead	Distribution	Luminaire	LUM HPS RWY 50W	Active	50	65485-54003	S-14	CITY OF E PROVIDENCE
0007	000	2	BURTON	AVE	640	Overhead	Distribution	Luminaire	LUM HPS RWY 50W	Active	50	65485-54003	S-14	CITY OF E PROVIDENCE
0002	000	2	BYRON	AVE	645	Overhead	Distribution	Luminaire	LUM HPS RWY 50W	Active	50	65485-54003	S-14	CITY OF E PROVIDENCE
0004	000	2	BYRON	AVE	645	Overhead	Distribution	Luminaire	LUM HPS RWY 50W	Active	50	65485-54003	S-14	CITY OF E PROVIDENCE
0006	000	2	BYRON	AVE	645	Overhead	Distribution	Luminaire	LUM HPS RWY 50W	Active	50	65485-54003	S-14	CITY OF E PROVIDENCE
0007	000	2	BYRON	AVE	645	Overhead	Distribution	Luminaire	LUM HPS RWY 50W TT	Temp Turn Off	50	90426-19008	S-14	CITY OF E PROVIDENCE
0008	000	2	BYRON	AVE	645	Overhead	Distribution	Luminaire	LUM HPS RWY 50W	Active	50	65485-54003	S-14	CITY OF E PROVIDENCE
0001	000	2	CADORNA	ST	650	Overhead	Distribution	Luminaire	LUM HPS RWY 50W	Active	50	65485-54003	S-14	CITY OF E PROVIDENCE
0003	000	2	CADORNA	ST	650	Overhead	Distribution	Luminaire	LUM HPS RWY 50W	Active	50	65485-54003	S-14	CITY OF E PROVIDENCE
0004	000	2	CADORNA	ST	650	Overhead	Distribution	Luminaire	LUM HPS RWY 50W TT	Temp Turn Off	50	65485-54003	S-14	CITY OF E PROVIDENCE
0005	000	2	CADORNA	ST	650	Overhead	Distribution	Luminaire	LUM HPS RWY 50W	Active	50	65485-54003	S-14	CITY OF E PROVIDENCE
0009	000	2	CADORNA	ST	650	Overhead	Distribution	Luminaire	LUM HPS RWY 50W	Active	50	65485-54003	S-14	CITY OF E PROVIDENCE
0011	000	2	CADORNA	ST	650	Overhead	Distribution	Luminaire	LUM HPS RWY 50W TT	Temp Turn Off	50	65485-54003	S-14	CITY OF E PROVIDENCE
0012	000	2	CADORNA	ST	650	Overhead	Distribution	Luminaire	LUM HPS RWY 50W	Active	50	65485-54003	S-14	CITY OF E PROVIDENCE
0001	000	2	CALLENDER	AVE	655	Overhead	Distribution	Luminaire	LUM HPS RWY 50W	Active	50	65485-54003	S-14	CITY OF E PROVIDENCE
0003	000	2	CALLENDER	AVE	655	Overhead	Distribution	Luminaire	LUM HPS RWY 50W	Active	50	65485-54003	S-14	CITY OF E PROVIDENCE
0005	000	2	CALLENDER	AVE	655	Overhead	Distribution	Luminaire	LUM HPS RWY 50W	Active	50	65485-54003	S-14	CITY OF E PROVIDENCE
0001	000	2	CAMPBELL	AVE	660	Overhead	Distribution	Luminaire	LUM HPS RWY 50W	Active	50	65485-54003	S-14	CITY OF E PROVIDENCE
0003	000	2	CAMPBELL	AVE	660	Overhead	Distribution	Luminaire	LUM HPS RWY 50W	Active	50	65485-54003	S-14	CITY OF E PROVIDENCE

Pole No	Pole Suffix	Light Sequ No	Street Name	Street Suffix	Ngrid Line No	Source Type	Pole Use	Component Type	Bill Print and Tariff Description	Billing Status	Lamp Wattage	Account No	Rate	Customer Name
0004	000	2	CAMPBELL	AVE	660	Overhead	Distribution	Luminaire	LUM HPS RWY 50W	Active	50	65485-54003	S-14	CITY OF E PROVIDENCE
0006	000	2	CAMPBELL	AVE	660	Overhead	Distribution	Luminaire	LUM HPS RWY 50W	Active	50	65485-54003	S-14	CITY OF E PROVIDENCE
0007	000	2	CAMPBELL	AVE	660	Overhead	Distribution	Luminaire	LUM HPS RWY 50W TT	Temp Turn Off	50	65485-54003	S-14	CITY OF E PROVIDENCE
0008	000	2	CAMPBELL	AVE	660	Overhead	Distribution	Luminaire	LUM HPS RWY 50W	Active	50	65485-54003	S-14	CITY OF E PROVIDENCE
0011	000	2	CAMPBELL	AVE	660	Overhead	Distribution	Luminaire	LUM HPS RWY 50W	Active	50	65485-54003	S-14	CITY OF E PROVIDENCE
0013	000	2	CAMPBELL	AVE	660	Overhead	Distribution	Luminaire	LUM HPS RWY 50W	Active	50	65485-54003	S-14	CITY OF E PROVIDENCE
0015	000	2	CAMPBELL	AVE	660	Overhead	Distribution	Luminaire	LUM HPS RWY 50W	Active	50	65485-54003	S-14	CITY OF E PROVIDENCE
0017	000	2	CAMPBELL	AVE	660	Overhead	Distribution	Luminaire	LUM HPS RWY 50W	Active	50	65485-54003	S-14	CITY OF E PROVIDENCE
0019	000	2	CAMPBELL	AVE	660	Overhead	Distribution	Luminaire	LUM HPS RWY 50W	Active	50	65485-54003	S-14	CITY OF E PROVIDENCE
0021	000	2	CAMPBELL	AVE	660	Overhead	Distribution	Luminaire	LUM HPS RWY 50W	Active	50	65485-54003	S-14	CITY OF E PROVIDENCE
0022	000	2	CAMPBELL	AVE	660	Overhead	Distribution	Luminaire	LUM HPS RWY 50W	Active	50	65485-54003	S-14	CITY OF E PROVIDENCE
0001	000	2	CARLTON	AVE	665	Overhead	Distribution	Luminaire	LUM HPS RWY 50W TT	Temp Turn Off	50	65485-54003	S-14	CITY OF E PROVIDENCE
0002	000	2	CARLTON	AVE	665	Overhead	Distribution	Luminaire	LUM HPS RWY 50W	Active	50	65485-54003	S-14	CITY OF E PROVIDENCE
0004	000	1	CARLTON	AVE	665	Overhead	Distribution	Luminaire	LUM HPS RWY 50W	Active	50	65485-54003	S-14	CITY OF E PROVIDENCE
0001	000	1	CAROLINA	AVE	670	Overhead	Distribution	Luminaire	LUM HPS RWY 50W	Active	50	65485-54003	S-14	CITY OF E PROVIDENCE
0001	000	2	CAROLINA	AVE	670	Overhead	Distribution	Luminaire	LUM HPS RWY 50W	Active	50	65485-54003	S-14	CITY OF E PROVIDENCE
0001	000	0	CAROUSEL	DR	674	Underground	Street Lighting	Pole	POLE METAL =>25FT	Inactive	0	65485-54003	S-14	CITY OF E PROVIDENCE
0001	000	1	CAROUSEL	DR	674	Underground	Street Lighting	Luminaire	LUM HPS RWY 100W	Active	100	65485-54003	S-14	CITY OF E PROVIDENCE
0002	000	0	CAROUSEL	DR	674	Underground	Street Lighting	Pole	POLE METAL =>25FT	Inactive	0	65485-54003	S-14	CITY OF E PROVIDENCE
0002	000	1	CAROUSEL	DR	674	Underground	Street Lighting	Luminaire	LUM HPS RWY 50W	Active	50	65485-54003	S-14	CITY OF E PROVIDENCE
0003	000	0	CAROUSEL	DR	674	Underground	Street Lighting	Pole	POLE METAL =>25FT	Inactive	0	65485-54003	S-14	CITY OF E PROVIDENCE
0003	000	1	CAROUSEL	DR	674	Underground	Street Lighting	Luminaire	LUM HPS RWY 50W	Active	50	65485-54003	S-14	CITY OF E PROVIDENCE
0004	000	0	CAROUSEL	DR	674	Underground	Street Lighting	Pole	POLE FIBERRWY=>25TT	Temp Turn Off	0	65485-54003	S-14	CITY OF E PROVIDENCE
0004	000	2	CAROUSEL	DR	674	Underground	Street Lighting	Luminaire	LUM HPS RWY 100W TT	Temp Turn Off	100	65485-54003	S-14	CITY OF E PROVIDENCE
0005	000	0	CAROUSEL	DR	674	Underground	Street Lighting	Pole	POLE FIBER RWY=>25	Active	0	65485-54003	S-14	CITY OF E PROVIDENCE
0005	000	1	CAROUSEL	DR	674	Underground	Street Lighting	Luminaire	LUM HPS RWY 50W	Active	50	65485-54003	S-14	CITY OF E PROVIDENCE
0006	000	0	CAROUSEL	DR	674	Underground	Street Lighting	Pole	POLE FIBER RWY=>25	Active	0	65485-54003	S-14	CITY OF E PROVIDENCE
0006	000	1	CAROUSEL	DR	674	Underground	Street Lighting	Luminaire	LUM HPS RWY 50W	Active	50	65485-54003	S-14	CITY OF E PROVIDENCE
0007	000	0	CAROUSEL	DR	674	Underground	Street Lighting	Pole	POLE FIBERRWY=>25TT	Temp Turn Off	0	65485-54003	S-14	CITY OF E PROVIDENCE
0007	000	2	CAROUSEL	DR	674	Underground	Street Lighting	Luminaire	LUM HPS RWY 100W TT	Temp Turn Off	100	65485-54003	S-14	CITY OF E PROVIDENCE
0008	000	0	CAROUSEL	DR	674	Underground	Street Lighting	Pole	POLE FIBER RWY=>25	Active	0	65485-54003	S-14	CITY OF E PROVIDENCE
0008	000	1	CAROUSEL	DR	674	Underground	Street Lighting	Luminaire	LUM HPS RWY 50W	Active	50	65485-54003	S-14	CITY OF E PROVIDENCE
0009	000	0	CAROUSEL	DR	674	Underground	Street Lighting	Pole	POLE FIBER RWY=>25	Active	0	65485-54003	S-14	CITY OF E PROVIDENCE
0009	000	1	CAROUSEL	DR	674	Underground	Street Lighting	Luminaire	LUM HPS RWY 50W	Active	50	65485-54003	S-14	CITY OF E PROVIDENCE
0010	000	0	CAROUSEL	DR	674	Underground	Street Lighting	Pole	POLE FIBER RWY=>25	Active	0	65485-54003	S-14	CITY OF E PROVIDENCE
0010	000	1	CAROUSEL	DR	674	Underground	Street Lighting	Luminaire	LUM HPS RWY 50W	Active	50	65485-54003	S-14	CITY OF E PROVIDENCE
0011	000	0	CAROUSEL	DR	674	Underground	Street Lighting	Pole	POLE FIBERRWY=>25TT	Temp Turn Off	0	65485-54003	S-14	CITY OF E PROVIDENCE
0011	000	2	CAROUSEL	DR	674	Underground	Street Lighting	Luminaire	LUM HPS RWY 100W TT	Temp Turn Off	100	65485-54003	S-14	CITY OF E PROVIDENCE
0012	000	0	CAROUSEL	DR	674	Underground	Street Lighting	Pole	POLE FIBER RWY=>25	Active	0	65485-54003	S-14	CITY OF E PROVIDENCE
0012	000	1	CAROUSEL	DR	674	Underground	Street Lighting	Luminaire	LUM HPS RWY 100W	Active	100	65485-54003	S-14	CITY OF E PROVIDENCE
0013	000	0	CAROUSEL	DR	674	Underground	Street Lighting	Pole	POLE FIBER RWY=>25	Inactive	0	90426-19008	S-14	CITY OF E PROVIDENCE
0013	000	1	CAROUSEL	DR	674	Underground	Street Lighting	Luminaire	LUM HPS RWY 50W	Active	50	90426-19008	S-14	CITY OF E PROVIDENCE
0014	000	0	CAROUSEL	DR	674	Underground	Street Lighting	Pole	POLE FIBER RWY=>25	Inactive	0	90426-19008	S-14	CITY OF E PROVIDENCE
0014	000	1	CAROUSEL	DR	674	Underground	Street Lighting	Luminaire	LUM HPS RWY 50W	Active	50	90426-19008	S-14	CITY OF E PROVIDENCE
0015	000	0	CAROUSEL	DR	674	Underground	Street Lighting	Pole	POLE METAL =>25FT	Inactive	0	65485-54003	S-14	CITY OF E PROVIDENCE
0015	000	2	CAROUSEL	DR	674	Underground	Street Lighting	Luminaire	LUM HPS RWY 100W TT	Temp Turn Off	100	65485-54003	S-14	CITY OF E PROVIDENCE
0016	000	0	CAROUSEL	DR	674	Underground	Street Lighting	Pole	POLE METAL =>25FT	Inactive	0	65485-54003	S-14	CITY OF E PROVIDENCE
0016	000	1	CAROUSEL	DR	674	Underground	Street Lighting	Luminaire	LUM HPS RWY 50W	Active	50	65485-54003	S-14	CITY OF E PROVIDENCE
0017	000	0	CAROUSEL	DR	674	Underground	Street Lighting	Pole	POLE METAL =>25FT	Inactive	0	65485-54003	S-14	CITY OF E PROVIDENCE
0017	000	1	CAROUSEL	DR	674	Underground	Street Lighting	Luminaire	LUM HPS RWY 50W	Active	50	65485-54003	S-14	CITY OF E PROVIDENCE
0001	000	0	CARRIAGE	LN	677	Underground	Street Lighting	Pole	POLE FIBER PT <25FT	Inactive	0	65485-54003	S-14	CITY OF E PROVIDENCE
0001	000	1	CARRIAGE	LN	677	Underground	Street Lighting	Luminaire	LUM HPS POST 100W	Inactive	100	65485-54003	S-14	CITY OF E PROVIDENCE
0002	000	0	CARRIAGE	LN	677	Underground	Street Lighting	Pole	POLE FIBER PT <25FT	Inactive	0	65485-54003	S-14	CITY OF E PROVIDENCE
0002	000	1	CARRIAGE	LN	677	Underground	Street Lighting	Luminaire	LUM HPS POST 100W	Inactive	100	65485-54003	S-14	CITY OF E PROVIDENCE
0003	000	0	CARRIAGE	LN	677	Underground	Street Lighting	Pole	POLE FIBER PT <25FT	Inactive	0	65485-54003	S-14	CITY OF E PROVIDENCE

Pole No	Pole Suffix	Light Sequ No	Street Name	Street Suffix	Ngrid Line No	Source Type	Pole Use	Component Type	Bill Print and Tariff Description	Billing Status	Lamp Wattage	Account No	Rate	Customer Name
0003	000	1	CARRIAGE	LN	677	Underground	Street Lighting	Luminaire	LUM HPS POST 100W	Inactive	100	65485-54003	S-14	CITY OF E PROVIDENCE
0003	001	0	CARRIAGE	LN	677	Underground	Street Lighting	Pole	POLE FIBER PT <25FT	Inactive	0	65485-54003	S-14	CITY OF E PROVIDENCE
0003	001	1	CARRIAGE	LN	677	Underground	Street Lighting	Luminaire	LUM HPS POST 100W	Inactive	100	65485-54003	S-14	CITY OF E PROVIDENCE
0004	000	0	CARRIAGE	LN	677	Underground	Street Lighting	Pole	POLE FIBER PT <25FT	Inactive	0	65485-54003	S-14	CITY OF E PROVIDENCE
0004	000	1	CARRIAGE	LN	677	Underground	Street Lighting	Luminaire	LUM HPS POST 100W	Inactive	100	65485-54003	S-14	CITY OF E PROVIDENCE
0001	000	2	CARRIE	AVE	680	Overhead	Distribution	Luminaire	LUM HPS RWY 50W	Active	50	65485-54003	S-14	CITY OF E PROVIDENCE
0002	000	2	CARRIE	AVE	680	Overhead	Distribution	Luminaire	LUM HPS RWY 50W	Active	50	65485-54003	S-14	CITY OF E PROVIDENCE
0004	000	2	CARRIE	AVE	680	Overhead	Distribution	Luminaire	LUM HPS RWY 50W	Active	50	65485-54003	S-14	CITY OF E PROVIDENCE
0001	000	2	CASE	ST	685	Overhead	Distribution	Luminaire	LUM HPS RWY 50W	Active	50	65485-54003	S-14	CITY OF E PROVIDENCE
0002	000	2	CASE	ST	685	Overhead	Distribution	Luminaire	LUM HPS RWY 50W	Active	50	65485-54003	S-14	CITY OF E PROVIDENCE
0001	000	2	CASTRO	ST	690	Overhead	Distribution	Luminaire	LUM HPS RWY 50W	Active	50	65485-54003	S-14	CITY OF E PROVIDENCE
0002	000	2	CASTRO	ST	690	Overhead	Distribution	Luminaire	LUM HPS RWY 50W	Active	50	65485-54003	S-14	CITY OF E PROVIDENCE
0003	000	2	CASTRO	ST	690	Overhead	Distribution	Luminaire	LUM HPS RWY 50W TT	Temp Turn Off	50	65485-54003	S-14	CITY OF E PROVIDENCE
0001	000	2	CATALPA	AVE	695	Overhead	Distribution	Luminaire	LUM HPS RWY 50W TT	Temp Turn Off	50	65485-54003	S-14	CITY OF E PROVIDENCE
0003	000	2	CATALPA	AVE	695	Overhead	Distribution	Luminaire	LUM HPS RWY 50W	Active	50	65485-54003	S-14	CITY OF E PROVIDENCE
0004	000	2	CATALPA	AVE	695	Overhead	Distribution	Luminaire	LUM HPS RWY 50W TT	Temp Turn Off	50	65485-54003	S-14	CITY OF E PROVIDENCE
0005	000	2	CATALPA	AVE	695	Overhead	Distribution	Luminaire	LUM HPS RWY 50W	Active	50	65485-54003	S-14	CITY OF E PROVIDENCE
0006	000	2	CATALPA	AVE	695	Overhead	Distribution	Luminaire	LUM HPS RWY 50W TT	Temp Turn Off	50	65485-54003	S-14	CITY OF E PROVIDENCE
0007	000	2	CATALPA	AVE	695	Overhead	Distribution	Luminaire	LUM HPS RWY 50W	Active	50	65485-54003	S-14	CITY OF E PROVIDENCE
0009	000	2	CATALPA	AVE	695	Overhead	Distribution	Luminaire	LUM HPS RWY 50W	Active	50	65485-54003	S-14	CITY OF E PROVIDENCE
0011	000	2	CATALPA	AVE	695	Overhead	Distribution	Luminaire	LUM HPS RWY 50W	Active	50	65485-54003	S-14	CITY OF E PROVIDENCE
0013	000	2	CATALPA	AVE	695	Overhead	Distribution	Luminaire	LUM HPS RWY 50W	Active	50	65485-54003	S-14	CITY OF E PROVIDENCE
0001	000	0	CATAMORE	BLVD	696	Underground	Street Lighting	Pole	POLE METAL W/BASE	Active	0	65485-54003	S-14	CITY OF E PROVIDENCE
0001	000	1	CATAMORE	BLVD	696	Underground	Street Lighting	Luminaire	LUM HPS RWY 100W	Active	100	65485-54003	S-14	CITY OF E PROVIDENCE
0002	000	0	CATAMORE	BLVD	696	Underground	Street Lighting	Pole	POLE METAL W/BASE	Active	0	65485-54003	S-14	CITY OF E PROVIDENCE
0002	000	1	CATAMORE	BLVD	696	Underground	Street Lighting	Luminaire	LUM HPS FLD 250W	Active	250	65485-54003	S-14	CITY OF E PROVIDENCE
0003	000	0	CATAMORE	BLVD	696	Underground	Street Lighting	Pole	POLE METAL W/BASE	Inactive	0	65485-54003	S-14	CITY OF E PROVIDENCE
0003	000	1	CATAMORE	BLVD	696	Underground	Street Lighting	Luminaire	LUM HPS RWY 100W	Red Cap Perm	100	65485-54003	S-14	CITY OF E PROVIDENCE
0004	000	0	CATAMORE	BLVD	696	Underground	Street Lighting	Pole	POLE METAL W/BASE	Active	0	65485-54003	S-14	CITY OF E PROVIDENCE
0004	000	1	CATAMORE	BLVD	696	Underground	Street Lighting	Luminaire	LUM HPS RWY 100W	Active	100	65485-54003	S-14	CITY OF E PROVIDENCE
0005	000	0	CATAMORE	BLVD	696	Underground	Street Lighting	Pole	POLE METAL W/BASE	Inactive	0	65485-54003	S-14	CITY OF E PROVIDENCE
0005	000	1	CATAMORE	BLVD	696	Underground	Street Lighting	Luminaire	LUM HPS RWY 100W	Red Cap Perm	100	65485-54003	S-14	CITY OF E PROVIDENCE
0006	000	0	CATAMORE	BLVD	696	Underground	Street Lighting	Pole	POLE METAL W/BASE	Active	0	65485-54003	S-14	CITY OF E PROVIDENCE
0006	000	1	CATAMORE	BLVD	696	Underground	Street Lighting	Luminaire	LUM HPS RWY 100W	Active	100	65485-54003	S-14	CITY OF E PROVIDENCE
0007	000	0	CATAMORE	BLVD	696	Underground	Street Lighting	Pole	POLE METAL =>25FT	Inactive	0	65485-54003	S-14	CITY OF E PROVIDENCE
0007	000	2	CATAMORE	BLVD	696	Underground	Street Lighting	Luminaire	LUM HPS RWY 100W	Active	100	65485-54003	S-14	CITY OF E PROVIDENCE
0008	000	0	CATAMORE	BLVD	696	Underground	Street Lighting	Pole	POLE METAL =>25FT	Inactive	0	65485-54003	S-14	CITY OF E PROVIDENCE
0008	000	2	CATAMORE	BLVD	696	Underground	Street Lighting	Luminaire	LUM HPS RWY 100W TT	Temp Turn Off	100	65485-54003	S-14	CITY OF E PROVIDENCE
0009	000	0	CATAMORE	BLVD	696	Underground	Street Lighting	Pole	POLE METAL W/BASE	Active	0	65485-54003	S-14	CITY OF E PROVIDENCE
0009	000	1	CATAMORE	BLVD	696	Underground	Street Lighting	Luminaire	LUM HPS RWY 100W	Active	100	65485-54003	S-14	CITY OF E PROVIDENCE
0010	000	0	CATAMORE	BLVD	696	Underground	Street Lighting	Pole	POLE METAL W/BASE	Inactive	0	65485-54003	S-14	CITY OF E PROVIDENCE
0010	000	1	CATAMORE	BLVD	696	Underground	Street Lighting	Luminaire	LUM HPS RWY 100W	Red Cap Perm	100	65485-54003	S-14	CITY OF E PROVIDENCE
0011	000	0	CATAMORE	BLVD	696	Underground	Street Lighting	Pole	POLE METAL W/BASE	Active	0	65485-54003	S-14	CITY OF E PROVIDENCE
0011	000	2	CATAMORE	BLVD	696	Underground	Street Lighting	Luminaire	LUM HPS RWY 100W	Active	100	65485-54003	S-14	CITY OF E PROVIDENCE
0001	000	2	CATLIN	AVE	705	Overhead	Distribution	Luminaire	LUM HPS RWY 50W	Active	50	65485-54003	S-14	CITY OF E PROVIDENCE
0003	000	2	CATLIN	AVE	705	Overhead	Distribution	Luminaire	LUM HPS RWY 50W	Active	50	65485-54003	S-14	CITY OF E PROVIDENCE
0005	000	2	CATLIN	AVE	705	Overhead	Distribution	Luminaire	LUM HPS RWY 50W	Active	50	65485-54003	S-14	CITY OF E PROVIDENCE
0007	000	2	CATLIN	AVE	705	Overhead	Distribution	Luminaire	LUM HPS RWY 50W	Active	50	65485-54003	S-14	CITY OF E PROVIDENCE
0009	000	2	CATLIN	AVE	705	Overhead	Distribution	Luminaire	LUM HPS RWY 50W	Active	50	65485-54003	S-14	CITY OF E PROVIDENCE
0012	000	2	CATLIN	AVE	705	Overhead	Distribution	Luminaire	LUM HPS RWY 50W	Active	50	65485-54003	S-14	CITY OF E PROVIDENCE
0013	000	2	CATLIN	AVE	705	Overhead	Distribution	Luminaire	LUM HPS RWY 50W	Active	50	65485-54003	S-14	CITY OF E PROVIDENCE
0015	000	2	CATLIN	AVE	705	Overhead	Distribution	Luminaire	LUM HPS RWY 50W	Active	50	65485-54003	S-14	CITY OF E PROVIDENCE
0017	000	2	CATLIN	AVE	705	Overhead	Distribution	Luminaire	LUM HPS RWY 50W	Active	50	65485-54003	S-14	CITY OF E PROVIDENCE
0002	000	2	CAULEY	ST	706	Overhead	Distribution	Luminaire	LUM HPS RWY 50W	Active	50	65485-54003	S-14	CITY OF E PROVIDENCE
0003	000	2	CAULEY	ST	706	Overhead	Distribution	Luminaire	LUM HPS RWY 50W	Active	50	65485-54003	S-14	CITY OF E PROVIDENCE

Pole No	Pole Suffix	Light Sequ No	Street Name	Street Suffix	Ngrid Line No	Source Type	Pole Use	Component Type	Bill Print and Tariff Description	Billing Status	Lamp Wattage	Account No	Rate	Customer Name
0001	000	2	CEDAR	AVE	710	Overhead	Distribution	Luminaire	LUM HPS RWY 50W	Active	50	65485-54003	S-14	CITY OF E PROVIDENCE
0003	000	2	CEDAR	AVE	710	Overhead	Distribution	Luminaire	LUM HPS RWY 50W	Active	50	65485-54003	S-14	CITY OF E PROVIDENCE
0005	000	2	CEDAR	AVE	710	Overhead	Distribution	Luminaire	LUM HPS RWY 50W	Active	50	65485-54003	S-14	CITY OF E PROVIDENCE
0006	000	2	CEDAR	AVE	710	Overhead	Distribution	Luminaire	LUM HPS RWY 50W TT	Temp Turn Off	50	65485-54003	S-14	CITY OF E PROVIDENCE
0007	000	2	CEDAR	AVE	710	Overhead	Distribution	Luminaire	LUM HPS RWY 50W	Active	50	65485-54003	S-14	CITY OF E PROVIDENCE
0009	000	2	CEDAR	AVE	710	Overhead	Distribution	Luminaire	LUM HPS RWY 50W	Active	50	65485-54003	S-14	CITY OF E PROVIDENCE
0011	000	2	CEDAR	AVE	710	Overhead	Distribution	Luminaire	LUM HPS RWY 50W	Active	50	65485-54003	S-14	CITY OF E PROVIDENCE
0013	000	2	CEDAR	AVE	710	Overhead	Distribution	Luminaire	LUM HPS RWY 50W	Active	50	65485-54003	S-14	CITY OF E PROVIDENCE
0002	000	2	CEDARWOOD	DR	715	Overhead	Distribution	Luminaire	LUM HPS RWY 50W	Active	50	90426-19008	S-14	CITY OF E PROVIDENCE
0004	000	2	CEDARWOOD	DR	715	Overhead	Distribution	Luminaire	LUM HPS RWY 50W	Active	50	65485-54003	S-14	CITY OF E PROVIDENCE
0001	000	2	CENTRAL	AVE	720	Overhead	Distribution	Luminaire	LUM HPS RWY 50W	Active	50	65485-54003	S-14	CITY OF E PROVIDENCE
0003	000	2	CENTRAL	AVE	720	Overhead	Distribution	Luminaire	LUM HPS RWY 50W	Active	50	65485-54003	S-14	CITY OF E PROVIDENCE
0004	000	2	CENTRAL	AVE	720	Overhead	Distribution	Luminaire	LUM HPS RWY 50W TT	Temp Turn Off	50	65485-54003	S-14	CITY OF E PROVIDENCE
0005	000	2	CENTRAL	AVE	720	Overhead	Distribution	Luminaire	LUM HPS RWY 50W	Active	50	65485-54003	S-14	CITY OF E PROVIDENCE
0007	000	2	CENTRAL	AVE	720	Overhead	Distribution	Luminaire	LUM HPS RWY 50W	Active	50	65485-54003	S-14	CITY OF E PROVIDENCE
0009	000	2	CENTRAL	AVE	720	Overhead	Distribution	Luminaire	LUM HPS RWY 50W	Active	50	65485-54003	S-14	CITY OF E PROVIDENCE
0011	000	2	CENTRAL	AVE	720	Overhead	Distribution	Luminaire	LUM HPS RWY 50W	Active	50	65485-54003	S-14	CITY OF E PROVIDENCE
0013	000	2	CENTRAL	AVE	720	Overhead	Distribution	Luminaire	LUM HPS RWY 50W	Active	50	65485-54003	S-14	CITY OF E PROVIDENCE
0015	000	2	CENTRAL	AVE	720	Overhead	Distribution	Luminaire	LUM HPS RWY 50W	Active	50	65485-54003	S-14	CITY OF E PROVIDENCE
0015	050	2	CENTRAL	AVE	720	Overhead	Distribution	Luminaire	LUM HPS RWY 50W	Active	50	65485-54003	S-14	CITY OF E PROVIDENCE
0017	000	2	CENTRAL	AVE	720	Overhead	Distribution	Luminaire	LUM HPS RWY 50W	Active	50	65485-54003	S-14	CITY OF E PROVIDENCE
0018	000	2	CENTRAL	AVE	720	Overhead	Distribution	Luminaire	LUM HPS RWY 100W	Active	100	65485-54003	S-14	CITY OF E PROVIDENCE
0019	000	2	CENTRAL	AVE	720	Overhead	Distribution	Luminaire	LUM HPS RWY 50W	Active	50	65485-54003	S-14	CITY OF E PROVIDENCE
0020	000	2	CENTRAL	AVE	720	Overhead	Distribution	Luminaire	LUM HPS RWY 50W TT	Temp Turn Off	50	65485-54003	S-14	CITY OF E PROVIDENCE
0021	000	2	CENTRAL	AVE	720	Overhead	Distribution	Luminaire	LUM HPS RWY 50W	Active	50	65485-54003	S-14	CITY OF E PROVIDENCE
0022	000	2	CENTRAL	AVE	720	Overhead	Distribution	Luminaire	LUM HPS RWY 50W TT	Temp Turn Off	50	65485-54003	S-14	CITY OF E PROVIDENCE
0023	000	2	CENTRAL	AVE	720	Overhead	Distribution	Luminaire	LUM HPS RWY 50W	Active	50	65485-54003	S-14	CITY OF E PROVIDENCE
0024	000	2	CENTRAL	AVE	720	Overhead	Distribution	Luminaire	LUM HPS RWY 50W	Active	50	65485-54003	S-14	CITY OF E PROVIDENCE
0025	000	2	CENTRAL	AVE	720	Overhead	Distribution	Luminaire	LUM HPS RWY 50W	Active	50	65485-54003	S-14	CITY OF E PROVIDENCE
0027	000	2	CENTRAL	AVE	720	Overhead	Distribution	Luminaire	LUM HPS RWY 50W	Active	50	65485-54003	S-14	CITY OF E PROVIDENCE
0001	000	1	CENTRE	ST	725	Overhead	Distribution	Luminaire	LUM HPS RWY 100W	Active	100	65485-54003	S-14	CITY OF E PROVIDENCE
0002	000	1	CENTRE	ST	725	Overhead	Distribution	Luminaire	LUM HPS RWY 50W	Active	50	65485-54003	S-14	CITY OF E PROVIDENCE
0004	000	1	CENTRE	ST	725	Overhead	Distribution	Luminaire	LUM HPS RWY 50W	Active	50	65485-54003	S-14	CITY OF E PROVIDENCE
0006	000	2	CENTRE	ST	725	Overhead	Distribution	Luminaire	LUM HPS RWY 100W	Active	100	65485-54003	S-14	CITY OF E PROVIDENCE
0007	000	2	CENTRE	ST	725	Overhead	Distribution	Luminaire	LUM HPS RWY 50W TT	Temp Turn Off	50	90426-19008	S-14	CITY OF E PROVIDENCE
0008	000	1	CENTRE	ST	725	Overhead	Distribution	Luminaire	LUM HPS RWY 50W	Active	50	65485-54003	S-14	CITY OF E PROVIDENCE
0009	000	1	CENTRE	ST	725	Overhead	Distribution	Luminaire	LUM HPS RWY 50W	Active	50	65485-54003	S-14	CITY OF E PROVIDENCE
0010	000	1	CENTRE	ST	725	Overhead	Distribution	Luminaire	LUM HPS RWY 50W	Active	50	65485-54003	S-14	CITY OF E PROVIDENCE
0011	000	1	CENTRE	ST	725	Overhead	Distribution	Luminaire	LUM HPS RWY 50W	Active	50	65485-54003	S-14	CITY OF E PROVIDENCE
0012	000	1	CENTRE	ST	725	Overhead	Distribution	Luminaire	LUM HPS RWY 50W	Active	50	65485-54003	S-14	CITY OF E PROVIDENCE
0013	000	1	CENTRE	ST	725	Overhead	Distribution	Luminaire	LUM HPS RWY 50W	Active	50	65485-54003	S-14	CITY OF E PROVIDENCE
0014	000	1	CENTRE	ST	725	Overhead	Distribution	Luminaire	LUM HPS RWY 50W	Active	50	65485-54003	S-14	CITY OF E PROVIDENCE
0016	000	1	CENTRE	ST	725	Overhead	Distribution	Luminaire	LUM HPS RWY 50W	Active	50	65485-54003	S-14	CITY OF E PROVIDENCE
0018	000	1	CENTRE	ST	725	Overhead	Distribution	Luminaire	LUM HPS RWY 50W	Active	50	65485-54003	S-14	CITY OF E PROVIDENCE
0020	000	1	CENTRE	ST	725	Overhead	Distribution	Luminaire	LUM HPS RWY 50W	Active	50	65485-54003	S-14	CITY OF E PROVIDENCE
0022	000	1	CENTRE	ST	725	Overhead	Distribution	Luminaire	LUM HPS RWY 50W	Active	50	65485-54003	S-14	CITY OF E PROVIDENCE
0023	084	1	CENTRE	ST	725	Overhead	Distribution	Luminaire	LUM HPS RWY 50W	Active	50	65485-54003	S-14	CITY OF E PROVIDENCE
0024	000	1	CENTRE	ST	725	Overhead	Distribution	Luminaire	LUM HPS RWY 50W	Active	50	65485-54003	S-14	CITY OF E PROVIDENCE
0025	000	1	CENTRE	ST	725	Overhead	Distribution	Luminaire	LUM HPS RWY 50W	Active	50	65485-54003	S-14	CITY OF E PROVIDENCE
0002	000	2	CHAFFEE	ST	730	Overhead	Distribution	Luminaire	LUM HPS RWY 50W	Active	50	65485-54003	S-14	CITY OF E PROVIDENCE
0004	000	2	CHAFFEE	ST	730	Overhead	Distribution	Luminaire	LUM HPS RWY 50W	Active	50	65485-54003	S-14	CITY OF E PROVIDENCE
0005	000	2	CHAFFEE	ST	730	Overhead	Distribution	Luminaire	LUM HPS RWY 50W TT	Temp Turn Off	50	65485-54003	S-14	CITY OF E PROVIDENCE
0001	000	2	CHANNING	AVE	735	Overhead	Distribution	Luminaire	LUM HPS RWY 50W TT	Temp Turn Off	50	65485-54003	S-14	CITY OF E PROVIDENCE
0002	000	2	CHANNING	AVE	735	Overhead	Distribution	Luminaire	LUM HPS RWY 50W	Active	50	65485-54003	S-14	CITY OF E PROVIDENCE
0003	000	2	CHANNING	AVE	735	Overhead	Distribution	Luminaire	LUM HPS RWY 50W TT	Temp Turn Off	50	65485-54003	S-14	CITY OF E PROVIDENCE

Pole No	Pole Suffix	Light Sequ No	Street Name	Street Suffix	Ngrid Line No	Source Type	Pole Use	Component Type	Bill Print and Tariff Description	Billing Status	Lamp Wattage	Account No	Rate	Customer Name
0005	000	2	CHANNING	AVE	735	Overhead	Distribution	Luminaire	LUM HPS RWY 50W	Active	50	65485-54003	S-14	CITY OF E PROVIDENCE
0001	000	2	CHARITY	ST	740	Overhead	Distribution	Luminaire	LUM HPS RWY 50W TT	Temp Turn Off	50	65485-54003	S-14	CITY OF E PROVIDENCE
0002	000	2	CHARITY	ST	740	Overhead	Distribution	Luminaire	LUM HPS RWY 50W	Active	50	65485-54003	S-14	CITY OF E PROVIDENCE
0005	000	2	CHARITY	ST	740	Overhead	Distribution	Luminaire	LUM HPS RWY 50W	Active	50	65485-54003	S-14	CITY OF E PROVIDENCE
9016	000	2	CHARLES	ST	745	Overhead	Distribution	Luminaire	LUM HPS RWY 50W	Active	50	65485-54003	S-14	CITY OF E PROVIDENCE
9017	000	2	CHARLES	ST	745	Overhead	Distribution	Luminaire	LUM HPS RWY 50W	Active	50	65485-54003	S-14	CITY OF E PROVIDENCE
9019	000	2	CHARLES	ST	745	Overhead	Distribution	Luminaire	LUM HPS RWY 50W	Active	50	65485-54003	S-14	CITY OF E PROVIDENCE
9020	000	2	CHARLES	ST	745	Overhead	Distribution	Luminaire	LUM HPS RWY 50W TT	Temp Turn Off	50	65485-54003	S-14	CITY OF E PROVIDENCE
9021	000	2	CHARLES	ST	745	Overhead	Distribution	Luminaire	LUM HPS RWY 50W	Active	50	65485-54003	S-14	CITY OF E PROVIDENCE
9023	000	2	CHARLES	ST	745	Overhead	Distribution	Luminaire	LUM HPS RWY 50W	Active	50	65485-54003	S-14	CITY OF E PROVIDENCE
9024	000	2	CHARLES	ST	745	Overhead	Distribution	Luminaire	LUM HPS RWY 250W	Active	250	65485-54003	S-14	CITY OF E PROVIDENCE
0002	000	2	CHARLOTTE	ST	750	Overhead	Distribution	Luminaire	LUM HPS RWY 50W	Active	50	65485-54003	S-14	CITY OF E PROVIDENCE
0004	000	1	CHARLOTTE	ST	750	Overhead	Distribution	Luminaire	LUM HPS RWY 50W	Inactive	50	65485-54003	S-14	CITY OF E PROVIDENCE
0011	000	2	CHARLTON	ST	4531	Overhead	Distribution	Luminaire	LUM HPS RWY 50W	Active	50	65485-54003	S-14	CITY OF E PROVIDENCE
0002	000	2	CHAUNCEY	AVE	755	Overhead	Distribution	Luminaire	LUM HPS RWY 50W	Active	50	65485-54003	S-14	CITY OF E PROVIDENCE
0003	000	2	CHAUNCEY	AVE	755	Overhead	Distribution	Luminaire	LUM HPS RWY 50W TT	Temp Turn Off	50	65485-54003	S-14	CITY OF E PROVIDENCE
0004	000	2	CHAUNCEY	AVE	755	Overhead	Distribution	Luminaire	LUM HPS RWY 50W	Active	50	65485-54003	S-14	CITY OF E PROVIDENCE
0006	000	2	CHAUNCEY	AVE	755	Overhead	Distribution	Luminaire	LUM HPS RWY 50W	Active	50	65485-54003	S-14	CITY OF E PROVIDENCE
0008	000	1	CHAUNCEY	AVE	755	Overhead	Distribution	Luminaire	LUM HPS RWY 100W	Active	100	65485-54003	S-14	CITY OF E PROVIDENCE
0002	000	2	CHEDELL	AVE	760	Overhead	Distribution	Luminaire	LUM HPS RWY 50W	Active	50	65485-54003	S-14	CITY OF E PROVIDENCE
0003	000	2	CHEDELL	AVE	760	Overhead	Distribution	Luminaire	LUM HPS RWY 50W	Active	50	65485-54003	S-14	CITY OF E PROVIDENCE
0003	001	1	CHEDELL	AVE	760	Overhead	Distribution	Luminaire	LUM HPS RWY 50W	Inactive	50	65485-54003	S-14	CITY OF E PROVIDENCE
0001	000	2	CHURCH	ST	766	Overhead	Distribution	Luminaire	LUM HPS RWY 50W	Active	50	65485-54003	S-14	CITY OF E PROVIDENCE
0002	000	2	CHURCH	ST	766	Overhead	Distribution	Luminaire	LUM HPS RWY 50W TT	Temp Turn Off	50	65485-54003	S-14	CITY OF E PROVIDENCE
0003	000	2	CHURCH	ST	766	Overhead	Distribution	Luminaire	LUM HPS RWY 50W	Active	50	65485-54003	S-14	CITY OF E PROVIDENCE
0004	000	2	CHURCH	ST	766	Overhead	Distribution	Luminaire	LUM HPS RWY 50W TT	Temp Turn Off	50	65485-54003	S-14	CITY OF E PROVIDENCE
0005	000	2	CHURCH	ST	766	Overhead	Distribution	Luminaire	LUM HPS RWY 50W	Active	50	65485-54003	S-14	CITY OF E PROVIDENCE
0006	000	2	CHURCH	ST	766	Overhead	Distribution	Luminaire	LUM HPS RWY 50W	Active	50	65485-54003	S-14	CITY OF E PROVIDENCE
0001	000	2	CIRCLE	DR	770	Overhead	Distribution	Luminaire	LUM HPS RWY 50W	Active	50	65485-54003	S-14	CITY OF E PROVIDENCE
0003	000	2	CIRCLE	DR	770	Overhead	Distribution	Luminaire	LUM HPS RWY 50W	Active	50	65485-54003	S-14	CITY OF E PROVIDENCE
0001	000	2	CIRCLE	ST	775	Overhead	Distribution	Luminaire	LUM HPS RWY 50W	Active	50	65485-54003	S-14	CITY OF E PROVIDENCE
0003	000	2	CIRCLE	ST	775	Overhead	Distribution	Luminaire	LUM HPS RWY 50W	Active	50	65485-54003	S-14	CITY OF E PROVIDENCE
0005	000	2	CIRCLE	ST	775	Overhead	Distribution	Luminaire	LUM HPS RWY 50W	Active	50	65485-54003	S-14	CITY OF E PROVIDENCE
0006	000	1	CIRCLE	ST	775	Overhead	Distribution	Luminaire	LUM HPS RWY 50W	Inactive	50	65485-54003	S-14	CITY OF E PROVIDENCE
0007	000	1	CIRCLE	ST	775	Overhead	Distribution	Luminaire	LUM HPS RWY 50W	Inactive	50	65485-54003	S-14	CITY OF E PROVIDENCE
0002	000	2	CIRCUIT	DR	780	Overhead	Distribution	Luminaire	LUM HPS RWY 50W TT	Temp Turn Off	50	65485-54003	S-14	CITY OF E PROVIDENCE
0003	000	1	CIRCUIT	DR	780	Overhead	Distribution	Luminaire	LUM HPS RWY 50W	Inactive	50	65485-54003	S-14	CITY OF E PROVIDENCE
0004	000	2	CIRCUIT	DR	780	Overhead	Distribution	Luminaire	LUM HPS RWY 50W	Active	50	65485-54003	S-14	CITY OF E PROVIDENCE
0005	000	2	CIRCUIT	DR	780	Overhead	Distribution	Luminaire	LUM HPS RWY 50W	Active	50	65485-54003	S-14	CITY OF E PROVIDENCE
0007	000	2	CIRCUIT	DR	780	Overhead	Distribution	Luminaire	LUM HPS RWY 50W	Active	50	65485-54003	S-14	CITY OF E PROVIDENCE
0009	000	2	CIRCUIT	DR	780	Overhead	Distribution	Luminaire	LUM HPS RWY 50W	Active	50	65485-54003	S-14	CITY OF E PROVIDENCE
0011	000	2	CIRCUIT	DR	780	Overhead	Distribution	Luminaire	LUM HPS RWY 50W	Active	50	65485-54003	S-14	CITY OF E PROVIDENCE
0014	000	2	CIRCUIT	DR	780	Overhead	Distribution	Luminaire	LUM HPS RWY 50W	Active	50	65485-54003	S-14	CITY OF E PROVIDENCE
0016	000	2	CIRCUIT	DR	780	Overhead	Distribution	Luminaire	LUM HPS RWY 50W	Active	50	65485-54003	S-14	CITY OF E PROVIDENCE
0018	000	2	CIRCUIT	DR	780	Overhead	Distribution	Luminaire	LUM HPS RWY 50W	Active	50	65485-54003	S-14	CITY OF E PROVIDENCE
0019	000	2	CIRCUIT	DR	780	Overhead	Distribution	Luminaire	LUM HPS RWY 50W	Active	50	65485-54003	S-14	CITY OF E PROVIDENCE
0020	000	2	CIRCUIT	DR	780	Overhead	Distribution	Luminaire	LUM HPS RWY 50W	Active	50	65485-54003	S-14	CITY OF E PROVIDENCE
0021	000	2	CIRCUIT	DR	780	Overhead	Distribution	Luminaire	LUM HPS RWY 50W TT	Temp Turn Off	50	65485-54003	S-14	CITY OF E PROVIDENCE
0022	000	2	CIRCUIT	DR	780	Overhead	Distribution	Luminaire	LUM HPS RWY 50W	Active	50	65485-54003	S-14	CITY OF E PROVIDENCE
0023	000	2	CIRCUIT	DR	780	Overhead	Distribution	Luminaire	LUM HPS RWY 50W TT	Temp Turn Off	50	65485-54003	S-14	CITY OF E PROVIDENCE
0024	000	2	CIRCUIT	DR	780	Overhead	Distribution	Luminaire	LUM HPS RWY 50W	Active	50	65485-54003	S-14	CITY OF E PROVIDENCE
0002	000	2	CITY VIEW	AVE	785	Overhead	Distribution	Luminaire	LUM HPS RWY 50W	Active	50	65485-54003	S-14	CITY OF E PROVIDENCE
0004	000	2	CITY VIEW	AVE	785	Overhead	Distribution	Luminaire	LUM HPS RWY 50W	Active	50	65485-54003	S-14	CITY OF E PROVIDENCE
0006	000	2	CITY VIEW	AVE	785	Overhead	Distribution	Luminaire	LUM HPS RWY 50W	Active	50	65485-54003	S-14	CITY OF E PROVIDENCE
0008	000	2	CITY VIEW	AVE	785	Overhead	Distribution	Luminaire	LUM HPS RWY 50W	Active	50	65485-54003	S-14	CITY OF E PROVIDENCE

Pole No	Pole Suffix	Light Sequ No	Street Name	Street Suffix	Ngrid Line No	Source Type	Pole Use	Component Type	Bill Print and Tariff Description	Billing Status	Lamp Wattage	Account No	Rate	Customer Name
0009	000	1	CITY VIEW	AVE	785	Overhead	Distribution	Luminaire	LUM HPS RWY 50W	Inactive	50	65485-54003	S-14	CITY OF E PROVIDENCE
0001	000	2	CLAIRE	ST	790	Overhead	Distribution	Luminaire	LUM HPS RWY 50W	Active	50	65485-54003	S-14	CITY OF E PROVIDENCE
0002	000	2	CLAIRE	ST	790	Overhead	Distribution	Luminaire	LUM HPS RWY 50W	Active	50	65485-54003	S-14	CITY OF E PROVIDENCE
0003	000	2	CLAIRE	ST	790	Overhead	Distribution	Luminaire	LUM HPS RWY 50W	Active	50	65485-54003	S-14	CITY OF E PROVIDENCE
0004	000	2	CLAIRE	ST	790	Overhead	Distribution	Luminaire	LUM HPS RWY 50W TT	Temp Turn Off	50	65485-54003	S-14	CITY OF E PROVIDENCE
0005	000	2	CLAIRE	ST	790	Overhead	Distribution	Luminaire	LUM HPS RWY 50W	Active	50	65485-54003	S-14	CITY OF E PROVIDENCE
0001	000	2	CLEMENCEAU	ST	795	Overhead	Distribution	Luminaire	LUM HPS RWY 50W TT	Temp Turn Off	50	65485-54003	S-14	CITY OF E PROVIDENCE
0002	000	2	CLEMENCEAU	ST	795	Overhead	Distribution	Luminaire	LUM HPS RWY 50W	Active	50	65485-54003	S-14	CITY OF E PROVIDENCE
0003	000	2	CLEMENCEAU	ST	795	Overhead	Distribution	Luminaire	LUM HPS RWY 50W	Active	50	65485-54003	S-14	CITY OF E PROVIDENCE
0002	000	2	CLIFFORD	ST	800	Overhead	Distribution	Luminaire	LUM HPS RWY 50W	Active	50	65485-54003	S-14	CITY OF E PROVIDENCE
0003	000	2	CLIFFORD	ST	800	Overhead	Distribution	Luminaire	LUM HPS RWY 50W	Active	50	65485-54003	S-14	CITY OF E PROVIDENCE
0002	000	2	CLIFTON	AVE	805	Overhead	Distribution	Luminaire	LUM HPS RWY 50W	Active	50	90426-19008	S-14	CITY OF E PROVIDENCE
0004	000	2	CLYDE	AVE	810	Overhead	Distribution	Luminaire	LUM HPS RWY 50W	Active	50	65485-54003	S-14	CITY OF E PROVIDENCE
0007	000	2	CLYDE	AVE	810	Overhead	Distribution	Luminaire	LUM HPS RWY 100W	Active	100	90426-19008	S-14	CITY OF E PROVIDENCE
0007	050	1	CLYDE	AVE	810	Overhead	Distribution	Luminaire	LUM HPS RWY 50W	Active	50	65485-54003	S-14	CITY OF E PROVIDENCE
0008	050	2	CLYDE	AVE	810	Overhead	Distribution	Luminaire	LUM HPS RWY 100W TT	Temp Turn Off	100	65485-54003	S-14	CITY OF E PROVIDENCE
0009	000	1	CLYDE	AVE	810	Overhead	Distribution	Luminaire	LUM HPS RWY 50W	Active	50	65485-54003	S-14	CITY OF E PROVIDENCE
0010	000	1	CLYDE	AVE	810	Overhead	Distribution	Luminaire	LUM HPS RWY 50W	Active	50	65485-54003	S-14	CITY OF E PROVIDENCE
0011	000	1	CLYDE	AVE	810	Overhead	Distribution	Luminaire	LUM HPS RWY 50W	Active	50	65485-54003	S-14	CITY OF E PROVIDENCE
0012	000	2	CLYDE	AVE	810	Overhead	Distribution	Luminaire	LUM HPS RWY 50W	Active	50	65485-54003	S-14	CITY OF E PROVIDENCE
0013	000	2	CLYDE	AVE	810	Overhead	Distribution	Luminaire	LUM HPS RWY 50W	Active	50	65485-54003	S-14	CITY OF E PROVIDENCE
0014	000	2	CLYDE	AVE	810	Overhead	Distribution	Luminaire	LUM HPS RWY 50W TT	Temp Turn Off	50	65485-54003	S-14	CITY OF E PROVIDENCE
0016	000	2	CLYDE	AVE	810	Overhead	Distribution	Luminaire	LUM HPS RWY 50W TT	Temp Turn Off	50	65485-54003	S-14	CITY OF E PROVIDENCE
0017	000	2	CLYDE	AVE	810	Overhead	Distribution	Luminaire	LUM HPS RWY 50W	Active	50	65485-54003	S-14	CITY OF E PROVIDENCE
0018	000	2	CLYDE	AVE	810	Overhead	Distribution	Luminaire	LUM HPS RWY 50W TT	Temp Turn Off	50	65485-54003	S-14	CITY OF E PROVIDENCE
0003	000	2	COBB	ST	815	Overhead	Distribution	Luminaire	LUM HPS RWY 50W	Active	50	65485-54003	S-14	CITY OF E PROVIDENCE
0005	000	2	COBB	ST	815	Overhead	Distribution	Luminaire	LUM HPS RWY 50W	Active	50	65485-54003	S-14	CITY OF E PROVIDENCE
0002	000	2	COLE	ST	820	Overhead	Distribution	Luminaire	LUM HPS RWY 50W	Active	50	65485-54003	S-14	CITY OF E PROVIDENCE
0004	000	2	COLE	ST	820	Overhead	Distribution	Luminaire	LUM HPS RWY 50W	Active	50	65485-54003	S-14	CITY OF E PROVIDENCE
0006	000	2	COLE	ST	820	Overhead	Distribution	Luminaire	LUM HPS RWY 50W	Active	50	65485-54003	S-14	CITY OF E PROVIDENCE
0002	000	2	COLONIAL	RD	825	Overhead	Distribution	Luminaire	LUM HPS RWY 50W	Active	50	65485-54003	S-14	CITY OF E PROVIDENCE
0001	000	2	COLONY	RD	830	Overhead	Distribution	Luminaire	LUM HPS RWY 50W	Active	50	65485-54003	S-14	CITY OF E PROVIDENCE
0002	000	2	COLONY	RD	830	Overhead	Distribution	Luminaire	LUM HPS RWY 50W	Active	50	65485-54003	S-14	CITY OF E PROVIDENCE
0003	000	2	COLONY	RD	830	Overhead	Distribution	Luminaire	LUM HPS RWY 50W	Active	50	65485-54003	S-14	CITY OF E PROVIDENCE
0004	000	2	COLONY	RD	830	Overhead	Distribution	Luminaire	LUM HPS RWY 50W	Active	50	65485-54003	S-14	CITY OF E PROVIDENCE
0006	000	2	COLONY	RD	830	Overhead	Distribution	Luminaire	LUM HPS RWY 50W	Active	50	65485-54003	S-14	CITY OF E PROVIDENCE
0008	000	2	COLONY	RD	830	Overhead	Distribution	Luminaire	LUM HPS RWY 50W	Active	50	65485-54003	S-14	CITY OF E PROVIDENCE
0001	000	2	COLWELL	ST	835	Overhead	Distribution	Luminaire	LUM HPS RWY 50W	Active	50	65485-54003	S-14	CITY OF E PROVIDENCE
0001	000	2	COMMACK	RD	840	Overhead	Distribution	Luminaire	LUM HPS RWY 50W	Active	50	65485-54003	S-14	CITY OF E PROVIDENCE
0003	000	2	COMMACK	RD	840	Overhead	Distribution	Luminaire	LUM HPS RWY 50W	Active	50	65485-54003	S-14	CITY OF E PROVIDENCE
0001	050	2	COMMERCIAL	WAY	842	Overhead	Distribution	Luminaire	LUM HPS RWY 100W TT	Temp Turn Off	100	65485-54003	S-14	CITY OF E PROVIDENCE
0002	050	1	COMMERCIAL	WAY	842	Overhead	Distribution	Luminaire	LUM HPS RWY 50W	Active	50	65485-54003	S-14	CITY OF E PROVIDENCE
0003	000	1	COMMERCIAL	WAY	842	Overhead	Distribution	Luminaire	LUM HPS RWY 50W	Active	50	65485-54003	S-14	CITY OF E PROVIDENCE
0004	000	2	COMMERCIAL	WAY	842	Overhead	Distribution	Luminaire	LUM HPS RWY 100W TT	Temp Turn Off	100	65485-54003	S-14	CITY OF E PROVIDENCE
0005	000	1	COMMERCIAL	WAY	842	Overhead	Distribution	Luminaire	LUM HPS RWY 50W	Active	50	65485-54003	S-14	CITY OF E PROVIDENCE
0006	000	2	COMMERCIAL	WAY	842	Overhead	Distribution	Luminaire	LUM HPS RWY 50W TT	Temp Turn Off	50	65485-54003	S-14	CITY OF E PROVIDENCE
0007	000	2	COMMERCIAL	WAY	842	Overhead	Distribution	Luminaire	LUM HPS RWY 50W	Active	50	65485-54003	S-14	CITY OF E PROVIDENCE
0008	000	2	COMMERCIAL	WAY	842	Overhead	Distribution	Luminaire	LUM HPS RWY 100W TT	Temp Turn Off	100	65485-54003	S-14	CITY OF E PROVIDENCE
0009	000	2	COMMERCIAL	WAY	842	Overhead	Distribution	Luminaire	LUM HPS RWY 100W TT	Temp Turn Off	100	65485-54003	S-14	CITY OF E PROVIDENCE
0010	000	1	COMMERCIAL	WAY	842	Overhead	Distribution	Luminaire	LUM HPS RWY 50W	Active	50	65485-54003	S-14	CITY OF E PROVIDENCE
0011	000	2	COMMERCIAL	WAY	842	Overhead	Distribution	Luminaire	LUM HPS RWY 100W TT	Temp Turn Off	100	65485-54003	S-14	CITY OF E PROVIDENCE
0012	000	1	COMMERCIAL	WAY	842	Overhead	Distribution	Luminaire	LUM HPS RWY 50W	Active	50	65485-54003	S-14	CITY OF E PROVIDENCE
0013	000	2	COMMERCIAL	WAY	842	Overhead	Distribution	Luminaire	LUM HPS RWY 50W	Active	50	65485-54003	S-14	CITY OF E PROVIDENCE
0013	050	1	COMMERCIAL	WAY	842	Overhead	Distribution	Luminaire	LUM HPS FLD 250W	Inactive	250	65485-54003	S-14	CITY OF E PROVIDENCE
0013	050	2	COMMERCIAL	WAY	842	Overhead	Distribution	Luminaire	LUM HPS FLD 250W	Inactive	250	65485-54003	S-14	CITY OF E PROVIDENCE

Pole No	Pole Suffix	Light Sequ No	Street Name	Street Suffix	Ngrid Line No	Source Type	Pole Use	Component Type	Bill Print and Tariff Description	Billing Status	Lamp Wattage	Account No	Rate	Customer Name
0013	050	3	COMMERCIAL	WAY	842	Overhead	Distribution	Luminaire	LUM HPS FLD 250W	Inactive	250	65485-54003	S-14	CITY OF E PROVIDENCE
0014	000	2	COMMERCIAL	WAY	842	Overhead	Distribution	Luminaire	LUM HPS RWY 50W	Active	50	65485-54003	S-14	CITY OF E PROVIDENCE
0015	000	2	COMMERCIAL	WAY	842	Overhead	Distribution	Luminaire	LUM HPS RWY 50W	Active	50	65485-54003	S-14	CITY OF E PROVIDENCE
0017	050	2	COMMERCIAL	WAY	842	Overhead	Distribution	Luminaire	LUM HPS RWY 100W TT	Temp Turn Off	100	65485-54003	S-14	CITY OF E PROVIDENCE
0019	000	1	COMMERCIAL	WAY	842	Overhead	Distribution	Luminaire	LUM HPS RWY 50W	Inactive	50	65485-54003	S-14	CITY OF E PROVIDENCE
0020	000	1	COMMERCIAL	WAY	842	Overhead	Distribution	Luminaire	LUM HPS RWY 50W TT	Temp Turn Off	50	65485-54003	S-14	CITY OF E PROVIDENCE
0021	000	1	COMMERCIAL	WAY	842	Overhead	Distribution	Luminaire	LUM HPS RWY 50W	Active	50	65485-54003	S-14	CITY OF E PROVIDENCE
0022	000	2	COMMERCIAL	WAY	842	Overhead	Distribution	Luminaire	LUM HPS RWY 100W TT	Temp Turn Off	100	65485-54003	S-14	CITY OF E PROVIDENCE
0023	000	1	COMMERCIAL	WAY	842	Overhead	Distribution	Luminaire	LUM HPS RWY 50W	Active	50	65485-54003	S-14	CITY OF E PROVIDENCE
0024	000	1	COMMERCIAL	WAY	842	Overhead	Distribution	Luminaire	LUM HPS RWY 50W	Active	50	65485-54003	S-14	CITY OF E PROVIDENCE
0025	000	2	COMMERCIAL	WAY	842	Overhead	Distribution	Luminaire	LUM HPS RWY 100W TT	Temp Turn Off	100	65485-54003	S-14	CITY OF E PROVIDENCE
0026	000	1	COMMERCIAL	WAY	842	Overhead	Distribution	Luminaire	LUM HPS RWY 50W	Active	50	65485-54003	S-14	CITY OF E PROVIDENCE
0027	000	2	COMMERCIAL	WAY	842	Overhead	Distribution	Luminaire	LUM HPS RWY 100W TT	Temp Turn Off	100	65485-54003	S-14	CITY OF E PROVIDENCE
0028	000	1	COMMERCIAL	WAY	842	Overhead	Distribution	Luminaire	LUM HPS RWY 50W	Active	50	65485-54003	S-14	CITY OF E PROVIDENCE
0001	000	2	CONNORS	LN	855	Overhead	Distribution	Luminaire	LUM HPS RWY 50W	Active	50	65485-54003	S-14	CITY OF E PROVIDENCE
0003	000	2	CONNORS	LN	855	Overhead	Distribution	Luminaire	LUM HPS RWY 50W	Active	50	65485-54003	S-14	CITY OF E PROVIDENCE
0004	000	2	CONNORS	LN	855	Overhead	Distribution	Luminaire	LUM HPS RWY 50W TT	Temp Turn Off	50	65485-54003	S-14	CITY OF E PROVIDENCE
0001	000	2	COOMBS	ST	860	Overhead	Distribution	Luminaire	LUM HPS RWY 50W	Active	50	65485-54003	S-14	CITY OF E PROVIDENCE
0001	000	2	COOPER	ST	865	Overhead	Distribution	Luminaire	LUM HPS RWY 50W	Active	50	65485-54003	S-14	CITY OF E PROVIDENCE
0003	000	2	COOPER	ST	865	Overhead	Distribution	Luminaire	LUM HPS RWY 50W	Active	50	65485-54003	S-14	CITY OF E PROVIDENCE
0004	000	1	COOPER	ST	865	Overhead	Distribution	Luminaire	LUM HPS RWY 100W	Inactive	100	65485-54003	S-14	CITY OF E PROVIDENCE
0001	000	2	CORA	AVE	870	Overhead	Distribution	Luminaire	LUM HPS RWY 250W TT	Temp Turn Off	250	65485-54003	S-14	CITY OF E PROVIDENCE
0002	000	1	CORA	AVE	870	Overhead	Distribution	Luminaire	LUM HPS RWY 50W	Active	50	65485-54003	S-14	CITY OF E PROVIDENCE
0004	000	2	CORA	AVE	870	Overhead	Distribution	Luminaire	LUM HPS RWY 250W TT	Temp Turn Off	250	65485-54003	S-14	CITY OF E PROVIDENCE
0001	000	1	CORNELL	AVE	875	Overhead	Distribution	Luminaire	LUM HPS RWY 100W	Active	100	65485-54003	S-14	CITY OF E PROVIDENCE
0003	000	2	CORNELL	AVE	875	Overhead	Distribution	Luminaire	LUM HPS RWY 50W	Active	50	65485-54003	S-14	CITY OF E PROVIDENCE
0002	000	2	COTTER	ST	885	Overhead	Distribution	Luminaire	LUM HPS RWY 50W	Active	50	65485-54003	S-14	CITY OF E PROVIDENCE
0004	000	2	COTTER	ST	885	Overhead	Distribution	Luminaire	LUM HPS RWY 50W	Active	50	65485-54003	S-14	CITY OF E PROVIDENCE
0006	000	2	COTTER	ST	885	Overhead	Distribution	Luminaire	LUM HPS RWY 50W	Active	50	65485-54003	S-14	CITY OF E PROVIDENCE
0008	000	2	COTTER	ST	885	Overhead	Distribution	Luminaire	LUM HPS RWY 50W	Active	50	65485-54003	S-14	CITY OF E PROVIDENCE
0003	000	2	COVE	ST	900	Overhead	Distribution	Luminaire	LUM HPS RWY 50W	Active	50	65485-54003	S-14	CITY OF E PROVIDENCE
0004	000	2	COVE	ST	900	Overhead	Distribution	Luminaire	LUM HPS RWY 50W	Active	50	65485-54003	S-14	CITY OF E PROVIDENCE
0006	000	2	COVE	ST	900	Overhead	Distribution	Luminaire	LUM HPS RWY 50W	Active	50	65485-54003	S-14	CITY OF E PROVIDENCE
0008	000	2	COVE	ST	900	Overhead	Distribution	Luminaire	LUM HPS RWY 50W	Active	50	65485-54003	S-14	CITY OF E PROVIDENCE
0001	000	2	COXE	ST	905	Overhead	Distribution	Luminaire	LUM HPS RWY 50W TT	Temp Turn Off	50	65485-54003	S-14	CITY OF E PROVIDENCE
0002	000	2	COYLE	ST	910	Overhead	Distribution	Luminaire	LUM HPS RWY 50W	Active	50	65485-54003	S-14	CITY OF E PROVIDENCE
0004	000	2	COYLE	ST	910	Overhead	Distribution	Luminaire	LUM HPS RWY 50W TT	Temp Turn Off	50	65485-54003	S-14	CITY OF E PROVIDENCE
0006	000	2	COYLE	ST	910	Overhead	Distribution	Luminaire	LUM HPS RWY 50W	Active	50	65485-54003	S-14	CITY OF E PROVIDENCE
0001	000	2	COZZENS	ST	915	Overhead	Distribution	Luminaire	LUM HPS RWY 50W	Active	50	65485-54003	S-14	CITY OF E PROVIDENCE
0002	000	1	COZZENS	ST	915	Overhead	Distribution	Luminaire	LUM HPS RWY 50W	Inactive	50	65485-54003	S-14	CITY OF E PROVIDENCE
0001	000	2	CRAIGIE	AVE	920	Overhead	Distribution	Luminaire	LUM HPS RWY 50W	Active	50	65485-54003	S-14	CITY OF E PROVIDENCE
0003	000	2	CRAIGIE	AVE	920	Overhead	Distribution	Luminaire	LUM HPS RWY 50W	Active	50	65485-54003	S-14	CITY OF E PROVIDENCE
0002	000	2	CRESCENT	AVE	930	Overhead	Distribution	Luminaire	LUM HPS RWY 50W	Active	50	65485-54003	S-14	CITY OF E PROVIDENCE
0004	000	2	CRESCENT	AVE	930	Overhead	Distribution	Luminaire	LUM HPS RWY 50W TT	Temp Turn Off	50	65485-54003	S-14	CITY OF E PROVIDENCE
0005	000	2	CRESCENT	AVE	930	Overhead	Distribution	Luminaire	LUM HPS RWY 50W	Active	50	65485-54003	S-14	CITY OF E PROVIDENCE
0002	000	1	CRESCENT VIEW	AVE	940	Overhead	Distribution	Luminaire	LUM HPS RWY 100W	Active	100	65485-54003	S-14	CITY OF E PROVIDENCE
0004	000	2	CRESCENT VIEW	AVE	940	Overhead	Distribution	Luminaire	LUM HPS RWY 100W	Active	100	65485-54003	S-14	CITY OF E PROVIDENCE
0004	003	2	CRESCENT VIEW	AVE	940	Overhead	Distribution	Luminaire	LUM HPS RWY 100W	Active	100	65485-54003	S-14	CITY OF E PROVIDENCE
0006	000	2	CRESCENT VIEW	AVE	940	Overhead	Distribution	Luminaire	LUM HPS RWY 100W	Active	100	65485-54003	S-14	CITY OF E PROVIDENCE
0008	000	2	CRESCENT VIEW	AVE	940	Overhead	Distribution	Luminaire	LUM HPS RWY 250W	Active	250	65485-54003	S-14	CITY OF E PROVIDENCE
0010	000	2	CRESCENT VIEW	AVE	940	Overhead	Distribution	Luminaire	LUM HPS RWY 100W	Active	100	65485-54003	S-14	CITY OF E PROVIDENCE
0012	000	2	CRESCENT VIEW	AVE	940	Overhead	Distribution	Luminaire	LUM HPS RWY 100W	Active	100	65485-54003	S-14	CITY OF E PROVIDENCE
0016	000	2	CRESCENT VIEW	AVE	940	Overhead	Distribution	Luminaire	LUM HPS RWY 100W	Active	100	65485-54003	S-14	CITY OF E PROVIDENCE
0018	000	2	CRESCENT VIEW	AVE	940	Overhead	Distribution	Luminaire	LUM HPS RWY 250W TT	Temp Turn Off	250	65485-54003	S-14	CITY OF E PROVIDENCE
0019	000	2	CRESCENT VIEW	AVE	940	Overhead	Distribution	Luminaire	LUM HPS RWY 100W	Active	100	90426-19008	S-14	CITY OF E PROVIDENCE

Pole No	Pole Suffix	Light Sequ No	Street Name	Street Suffix	Ngrid Line No	Source Type	Pole Use	Component Type	Bill Print and Tariff Description	Billing Status	Lamp Wattage	Account No	Rate	Customer Name
0020	000	2	CRESCENT VIEW	AVE	940	Overhead	Distribution	Luminaire	LUM HPS RWY 100W	Active	100	65485-54003	S-14	CITY OF E PROVIDENCE
0021	000	2	CRESCENT VIEW	AVE	940	Overhead	Distribution	Luminaire	LUM HPS RWY 100W	Active	100	90426-19008	S-14	CITY OF E PROVIDENCE
0022	000	2	CRESCENT VIEW	AVE	940	Overhead	Distribution	Luminaire	LUM HPS RWY 250W TT	Temp Turn Off	250	65485-54003	S-14	CITY OF E PROVIDENCE
0022	050	2	CRESCENT VIEW	AVE	940	Overhead	Distribution	Luminaire	LUM HPS RWY 100W	Active	100	65485-54003	S-14	CITY OF E PROVIDENCE
0024	000	2	CRESCENT VIEW	AVE	940	Overhead	Distribution	Luminaire	LUM HPS RWY 100W	Active	100	65485-54003	S-14	CITY OF E PROVIDENCE
0026	000	2	CRESCENT VIEW	AVE	940	Overhead	Distribution	Luminaire	LUM HPS RWY 100W	Active	100	65485-54003	S-14	CITY OF E PROVIDENCE
0028	000	2	CRESCENT VIEW	AVE	940	Overhead	Distribution	Luminaire	LUM HPS RWY 100W	Active	100	65485-54003	S-14	CITY OF E PROVIDENCE
0029	000	2	CRESCENT VIEW	AVE	940	Overhead	Distribution	Luminaire	LUM HPS RWY 250W TT	Temp Turn Off	250	90426-19008	S-14	CITY OF E PROVIDENCE
0030	000	2	CRESCENT VIEW	AVE	940	Overhead	Distribution	Luminaire	LUM HPS RWY 100W	Active	100	65485-54003	S-14	CITY OF E PROVIDENCE
0030	050	2	CRESCENT VIEW	AVE	940	Overhead	Distribution	Luminaire	LUM HPS RWY 100W	Active	100	65485-54003	S-14	CITY OF E PROVIDENCE
0031	000	2	CRESCENT VIEW	AVE	940	Overhead	Distribution	Luminaire	LUM HPS RWY 250W TT	Temp Turn Off	250	65485-54003	S-14	CITY OF E PROVIDENCE
0032	000	2	CRESCENT VIEW	AVE	940	Overhead	Distribution	Luminaire	LUM HPS RWY 100W	Active	100	65485-54003	S-14	CITY OF E PROVIDENCE
0002	000	2	CROSS	ST	950	Overhead	Distribution	Luminaire	LUM HPS RWY 50W TT	Temp Turn Off	50	65485-54003	S-14	CITY OF E PROVIDENCE
0002	000	2	CROWN	AVE	955	Overhead	Distribution	Luminaire	LUM HPS RWY 50W	Active	50	65485-54003	S-14	CITY OF E PROVIDENCE
0004	000	2	CROWN	AVE	955	Overhead	Distribution	Luminaire	LUM HPS RWY 50W	Active	50	65485-54003	S-14	CITY OF E PROVIDENCE
0006	000	2	CROWN	AVE	955	Overhead	Distribution	Luminaire	LUM HPS RWY 50W	Active	50	65485-54003	S-14	CITY OF E PROVIDENCE
0008	000	2	CROWN	AVE	955	Overhead	Distribution	Luminaire	LUM HPS RWY 50W	Active	50	65485-54003	S-14	CITY OF E PROVIDENCE
0010	000	2	CROWN	AVE	955	Overhead	Distribution	Luminaire	LUM HPS RWY 50W	Active	50	65485-54003	S-14	CITY OF E PROVIDENCE
0011	000	2	CROWN	AVE	955	Overhead	Distribution	Luminaire	LUM HPS RWY 50W TT	Temp Turn Off	50	65485-54003	S-14	CITY OF E PROVIDENCE
0012	000	2	CROWN	AVE	955	Overhead	Distribution	Luminaire	LUM HPS RWY 50W	Active	50	65485-54003	S-14	CITY OF E PROVIDENCE
0001	000	2	CUL-DE-SAC	WAY	960	Overhead	Distribution	Luminaire	LUM HPS RWY 50W	Active	50	65485-54003	S-14	CITY OF E PROVIDENCE
0002	000	2	CUL-DE-SAC	WAY	960	Overhead	Distribution	Luminaire	LUM HPS RWY 50W	Active	50	65485-54003	S-14	CITY OF E PROVIDENCE
0003	000	2	CUL-DE-SAC	WAY	960	Overhead	Distribution	Luminaire	LUM HPS RWY 50W TT	Temp Turn Off	50	65485-54003	S-14	CITY OF E PROVIDENCE
0004	000	2	CUL-DE-SAC	WAY	960	Overhead	Distribution	Luminaire	LUM HPS RWY 50W	Active	50	65485-54003	S-14	CITY OF E PROVIDENCE
0005	000	2	CUL-DE-SAC	WAY	960	Overhead	Distribution	Luminaire	LUM HPS RWY 50W TT	Temp Turn Off	50	65485-54003	S-14	CITY OF E PROVIDENCE
0006	000	2	CUL-DE-SAC	WAY	960	Overhead	Distribution	Luminaire	LUM HPS RWY 50W	Active	50	65485-54003	S-14	CITY OF E PROVIDENCE
0001	000	2	CUMBERLAND	RD	965	Overhead	Distribution	Luminaire	LUM HPS RWY 50W TT	Temp Turn Off	50	65485-54003	S-14	CITY OF E PROVIDENCE
0002	000	2	CUMBERLAND	RD	965	Overhead	Distribution	Luminaire	LUM HPS RWY 50W	Active	50	65485-54003	S-14	CITY OF E PROVIDENCE
0004	000	2	CUMBERLAND	RD	965	Overhead	Distribution	Luminaire	LUM HPS RWY 50W	Active	50	65485-54003	S-14	CITY OF E PROVIDENCE
0005	000	2	CUMBERLAND	RD	965	Overhead	Distribution	Luminaire	LUM HPS RWY 250W	Active	250	65485-54003	S-14	CITY OF E PROVIDENCE
0001	000	2	CURTIS	ST	970	Overhead	Distribution	Luminaire	LUM HPS RWY 50W	Active	50	65485-54003	S-14	CITY OF E PROVIDENCE
0003	000	2	CURTIS	ST	970	Overhead	Distribution	Luminaire	LUM HPS RWY 50W	Active	50	65485-54003	S-14	CITY OF E PROVIDENCE
0004	000	2	CURTIS	ST	970	Overhead	Distribution	Luminaire	LUM HPS RWY 50W	Active	50	65485-54003	S-14	CITY OF E PROVIDENCE
0005	000	2	CURTIS	ST	970	Overhead	Distribution	Luminaire	LUM HPS RWY 50W TT	Temp Turn Off	50	65485-54003	S-14	CITY OF E PROVIDENCE
0006	000	2	CURTIS	ST	970	Overhead	Distribution	Luminaire	LUM HPS RWY 50W	Active	50	65485-54003	S-14	CITY OF E PROVIDENCE
0001	000	2	CURVE	AVE	980	Overhead	Distribution	Luminaire	LUM HPS RWY 50W	Active	50	65485-54003	S-14	CITY OF E PROVIDENCE
0003	000	1	CURVE	AVE	980	Overhead	Distribution	Luminaire	LUM HPS RWY 50W	Active	50	65485-54003	S-14	CITY OF E PROVIDENCE
0001	000	1	CUSHMAN	AVE	985	Overhead	Distribution	Luminaire	LUM HPS RWY 50W	Inactive	50	65485-54003	S-14	CITY OF E PROVIDENCE
0002	000	1	CUSHMAN	AVE	985	Overhead	Distribution	Luminaire	LUM HPS RWY 50W	Inactive	50	65485-54003	S-14	CITY OF E PROVIDENCE
0004	000	1	CUSHMAN	AVE	985	Overhead	Distribution	Luminaire	LUM HPS RWY 50W	Inactive	50	65485-54003	S-14	CITY OF E PROVIDENCE
0005	000	2	CUSHMAN	AVE	985	Overhead	Distribution	Luminaire	LUM HPS RWY 50W	Active	50	65485-54003	S-14	CITY OF E PROVIDENCE
0006	000	2	CUSHMAN	AVE	985	Overhead	Distribution	Luminaire	LUM HPS RWY 50W	Active	50	65485-54003	S-14	CITY OF E PROVIDENCE
0007	000	2	CUSHMAN	AVE	985	Overhead	Distribution	Luminaire	LUM HPS RWY 50W TT	Temp Turn Off	50	90426-19008	S-14	CITY OF E PROVIDENCE
0008	000	2	CUSHMAN	AVE	985	Overhead	Distribution	Luminaire	LUM HPS RWY 50W	Active	50	65485-54003	S-14	CITY OF E PROVIDENCE
0009	000	2	CUSHMAN	AVE	985	Overhead	Distribution	Luminaire	LUM HPS RWY 50W	Active	50	65485-54003	S-14	CITY OF E PROVIDENCE
0010	000	2	CUSHMAN	AVE	985	Overhead	Distribution	Luminaire	LUM HPS RWY 50W	Active	50	65485-54003	S-14	CITY OF E PROVIDENCE
0011	000	2	CUSHMAN	AVE	985	Overhead	Distribution	Luminaire	LUM HPS RWY 50W TT	Temp Turn Off	50	65485-54003	S-14	CITY OF E PROVIDENCE
0012	000	2	CUSHMAN	AVE	985	Overhead	Distribution	Luminaire	LUM HPS RWY 50W	Active	50	65485-54003	S-14	CITY OF E PROVIDENCE
0013	000	2	CUSHMAN	AVE	985	Overhead	Distribution	Luminaire	LUM HPS RWY 50W TT	Temp Turn Off	50	65485-54003	S-14	CITY OF E PROVIDENCE
0014	000	2	CUSHMAN	AVE	985	Overhead	Distribution	Luminaire	LUM HPS RWY 50W	Active	50	65485-54003	S-14	CITY OF E PROVIDENCE
0016	000	2	CUSHMAN	AVE	985	Overhead	Distribution	Luminaire	LUM HPS RWY 50W	Active	50	65485-54003	S-14	CITY OF E PROVIDENCE
0017	000	1	CUSHMAN	AVE	985	Overhead	Distribution	Luminaire	LUM HPS RWY 50W	Active	50	90426-19008	S-14	CITY OF E PROVIDENCE
0001	000	2	CUSTER	ST	990	Overhead	Distribution	Luminaire	LUM HPS RWY 50W	Active	50	65485-54003	S-14	CITY OF E PROVIDENCE
0002	000	2	CUSTER	ST	990	Overhead	Distribution	Luminaire	LUM HPS RWY 50W	Active	50	65485-54003	S-14	CITY OF E PROVIDENCE
0002	000	2	CYPRESS	ST	995	Overhead	Distribution	Luminaire	LUM HPS RWY 50W	Active	50	65485-54003	S-14	CITY OF E PROVIDENCE

Pole No	Pole Suffix	Light Sequ No	Street Name	Street Suffix	Ngrid Line No	Source Type	Pole Use	Component Type	Bill Print and Tariff Description	Billing Status	Lamp Wattage	Account No	Rate	Customer Name
0003	000	2	CYPRESS	ST	995	Overhead	Distribution	Luminaire	LUM HPS RWY 50W TT	Temp Turn Off	50	65485-54003	S-14	CITY OF E PROVIDENCE
0004	000	2	CYPRESS	ST	995	Overhead	Distribution	Luminaire	LUM HPS RWY 50W TT	Temp Turn Off	50	65485-54003	S-14	CITY OF E PROVIDENCE
0001	000	2	DAISY	DR	1000	Overhead	Distribution	Luminaire	LUM HPS RWY 50W TT	Temp Turn Off	50	65485-54003	S-14	CITY OF E PROVIDENCE
0002	000	2	DALTON	ST	1005	Overhead	Distribution	Luminaire	LUM HPS RWY 50W	Active	50	65485-54003	S-14	CITY OF E PROVIDENCE
0004	000	2	DALTON	ST	1005	Overhead	Distribution	Luminaire	LUM HPS RWY 50W	Active	50	65485-54003	S-14	CITY OF E PROVIDENCE
0006	000	2	DALTON	ST	1005	Overhead	Distribution	Luminaire	LUM HPS RWY 50W	Active	50	65485-54003	S-14	CITY OF E PROVIDENCE
0008	000	2	DALTON	ST	1005	Overhead	Distribution	Luminaire	LUM HPS RWY 50W	Active	50	65485-54003	S-14	CITY OF E PROVIDENCE
0001	000	2	DARTMOUTH	AVE	1010	Overhead	Distribution	Luminaire	LUM HPS RWY 50W	Active	50	65485-54003	S-14	CITY OF E PROVIDENCE
0003	000	2	DARTMOUTH	AVE	1010	Overhead	Distribution	Luminaire	LUM HPS RWY 50W	Active	50	65485-54003	S-14	CITY OF E PROVIDENCE
0005	000	2	DARTMOUTH	AVE	1010	Overhead	Distribution	Luminaire	LUM HPS RWY 50W	Active	50	65485-54003	S-14	CITY OF E PROVIDENCE
0007	000	2	DARTMOUTH	AVE	1010	Overhead	Distribution	Luminaire	LUM HPS RWY 50W	Active	50	65485-54003	S-14	CITY OF E PROVIDENCE
0002	000	2	DAVID	ST	1015	Overhead	Distribution	Luminaire	LUM HPS RWY 50W	Active	50	65485-54003	S-14	CITY OF E PROVIDENCE
0002	000	2	DEARBORN	DR	1020	Overhead	Distribution	Luminaire	LUM HPS RWY 50W TT	Temp Turn Off	50	90426-19008	S-14	CITY OF E PROVIDENCE
0003	000	2	DEARBORN	DR	1020	Overhead	Distribution	Luminaire	LUM HPS RWY 50W TT	Temp Turn Off	50	90426-19008	S-14	CITY OF E PROVIDENCE
0004	000	2	DEARBORN	DR	1020	Overhead	Distribution	Luminaire	LUM HPS RWY 50W	Active	50	90426-19008	S-14	CITY OF E PROVIDENCE
0007	000	2	DEARBORN	DR	1020	Overhead	Distribution	Luminaire	LUM HPS RWY 50W	Active	50	65485-54003	S-14	CITY OF E PROVIDENCE
0008	000	2	DEARBORN	DR	1020	Overhead	Distribution	Luminaire	LUM HPS RWY 50W	Active	50	65485-54003	S-14	CITY OF E PROVIDENCE
0009	000	2	DEARBORN	DR	1020	Overhead	Distribution	Luminaire	LUM HPS RWY 50W TT	Temp Turn Off	50	65485-54003	S-14	CITY OF E PROVIDENCE
0010	000	2	DEARBORN	DR	1020	Overhead	Distribution	Luminaire	LUM HPS RWY 50W	Active	50	65485-54003	S-14	CITY OF E PROVIDENCE
0011	000	2	DEARBORN	DR	1020	Overhead	Distribution	Luminaire	LUM HPS RWY 50W TT	Temp Turn Off	50	65485-54003	S-14	CITY OF E PROVIDENCE
0002	000	2	DEER	ST	1025	Overhead	Distribution	Luminaire	LUM HPS RWY 50W	Active	50	65485-54003	S-14	CITY OF E PROVIDENCE
0003	000	2	DEER	ST	1025	Overhead	Distribution	Luminaire	LUM HPS RWY 50W	Active	50	65485-54003	S-14	CITY OF E PROVIDENCE
0004	000	2	DEER	ST	1025	Overhead	Distribution	Luminaire	LUM HPS RWY 50W	Active	50	65485-54003	S-14	CITY OF E PROVIDENCE
0007	000	2	DEER	ST	1025	Overhead	Distribution	Luminaire	LUM HPS RWY 50W	Active	50	65485-54003	S-14	CITY OF E PROVIDENCE
0009	000	2	DEER	ST	1025	Overhead	Distribution	Luminaire	LUM HPS RWY 50W	Active	50	65485-54003	S-14	CITY OF E PROVIDENCE
0010	050	1	DEER	ST	1025	Overhead	Distribution	Luminaire	LUM HPS RWY 50W	Active	50	65485-54003	S-14	CITY OF E PROVIDENCE
0011	050	2	DEER	ST	1025	Overhead	Distribution	Luminaire	LUM HPS RWY 50W	Active	50	65485-54003	S-14	CITY OF E PROVIDENCE
0012	000	2	DEER	ST	1025	Overhead	Distribution	Luminaire	LUM HPS RWY 50W	Active	50	65485-54003	S-14	CITY OF E PROVIDENCE
0013	000	2	DEER	ST	1025	Overhead	Distribution	Luminaire	LUM HPS RWY 50W TT	Temp Turn Off	50	65485-54003	S-14	CITY OF E PROVIDENCE
0014	000	2	DEER	ST	1025	Overhead	Distribution	Luminaire	LUM HPS RWY 50W	Active	50	65485-54003	S-14	CITY OF E PROVIDENCE
0001	000	2	DEL'S	LN	1030	Overhead	Distribution	Luminaire	LUM HPS RWY 50W	Active	50	65485-54003	S-14	CITY OF E PROVIDENCE
0002	000	2	DELWAY	RD	1035	Overhead	Distribution	Luminaire	LUM HPS RWY 50W	Active	50	65485-54003	S-14	CITY OF E PROVIDENCE
0003	000	2	DELWAY	RD	1035	Overhead	Distribution	Luminaire	LUM HPS RWY 50W	Active	50	65485-54003	S-14	CITY OF E PROVIDENCE
0005	000	2	DELWAY	RD	1035	Overhead	Distribution	Luminaire	LUM HPS RWY 50W	Active	50	65485-54003	S-14	CITY OF E PROVIDENCE
0007	000	2	DELWAY	RD	1035	Overhead	Distribution	Luminaire	LUM HPS RWY 50W	Active	50	65485-54003	S-14	CITY OF E PROVIDENCE
0001	000	2	DERMAN	ST	1045	Overhead	Distribution	Luminaire	LUM HPS RWY 50W	Active	50	65485-54003	S-14	CITY OF E PROVIDENCE
0003	000	2	DERMAN	ST	1045	Overhead	Distribution	Luminaire	LUM HPS RWY 50W	Active	50	90426-19008	S-14	CITY OF E PROVIDENCE
0004	000	2	DERMAN	ST	1045	Overhead	Distribution	Luminaire	LUM HPS RWY 50W TT	Temp Turn Off	50	90426-19008	S-14	CITY OF E PROVIDENCE
0002	000	2	DEWEY	AVE	1050	Overhead	Distribution	Luminaire	LUM HPS RWY 50W	Active	50	65485-54003	S-14	CITY OF E PROVIDENCE
0004	000	2	DEWEY	AVE	1050	Overhead	Distribution	Luminaire	LUM HPS RWY 50W	Active	50	65485-54003	S-14	CITY OF E PROVIDENCE
0005	000	2	DEWEY	AVE	1050	Overhead	Distribution	Luminaire	LUM HPS RWY 50W	Active	50	65485-54003	S-14	CITY OF E PROVIDENCE
0006	000	2	DEWEY	AVE	1050	Overhead	Distribution	Luminaire	LUM HPS RWY 50W TT	Temp Turn Off	50	65485-54003	S-14	CITY OF E PROVIDENCE
0008	000	2	DEWEY	AVE	1050	Overhead	Distribution	Luminaire	LUM HPS RWY 50W	Active	50	65485-54003	S-14	CITY OF E PROVIDENCE
0010	000	2	DEWEY	AVE	1050	Overhead	Distribution	Luminaire	LUM HPS RWY 50W	Active	50	65485-54003	S-14	CITY OF E PROVIDENCE
0012	000	2	DEWEY	AVE	1050	Overhead	Distribution	Luminaire	LUM HPS RWY 50W	Active	50	65485-54003	S-14	CITY OF E PROVIDENCE
0014	000	2	DEWEY	AVE	1050	Overhead	Distribution	Luminaire	LUM HPS RWY 50W	Active	50	65485-54003	S-14	CITY OF E PROVIDENCE
0001	000	2	DEXTER	RD	1055	Overhead	Distribution	Luminaire	LUM HPS RWY 100W	Active	100	65485-54003	S-14	CITY OF E PROVIDENCE
0003	000	2	DEXTER	RD	1055	Overhead	Distribution	Luminaire	LUM HPS RWY 100W	Active	100	65485-54003	S-14	CITY OF E PROVIDENCE
0005	000	2	DEXTER	RD	1055	Overhead	Distribution	Luminaire	LUM HPS RWY 100W	Active	100	65485-54003	S-14	CITY OF E PROVIDENCE
0007	000	2	DEXTER	RD	1055	Overhead	Distribution	Luminaire	LUM HPS RWY 50W	Active	50	65485-54003	S-14	CITY OF E PROVIDENCE
0009	000	2	DEXTER	RD	1055	Overhead	Distribution	Luminaire	LUM HPS RWY 50W	Active	50	65485-54003	S-14	CITY OF E PROVIDENCE
0011	000	2	DEXTER	RD	1055	Overhead	Distribution	Luminaire	LUM HPS RWY 100W	Active	100	65485-54003	S-14	CITY OF E PROVIDENCE
0013	000	2	DEXTER	RD	1055	Overhead	Distribution	Luminaire	LUM HPS RWY 100W	Active	100	65485-54003	S-14	CITY OF E PROVIDENCE
0014	050	2	DEXTER	RD	1055	Overhead	Distribution	Luminaire	LUM HPS RWY 100W TT	Temp Turn Off	100	65485-54003	S-14	CITY OF E PROVIDENCE
0016	000	1	DEXTER	RD	1055	Overhead	Distribution	Luminaire	LUM HPS RWY 50W	Active	50	65485-54003	S-14	CITY OF E PROVIDENCE

Pole No	Pole Suffix	Light Sequ No	Street Name	Street Suffix	Ngrid Line No	Source Type	Pole Use	Component Type	Bill Print and Tariff Description	Billing Status	Lamp Wattage	Account No	Rate	Customer Name
0018	000	1	DEXTER	RD	1055	Overhead	Distribution	Luminaire	LUM HPS RWY 50W	Active	50	65485-54003	S-14	CITY OF E PROVIDENCE
0020	000	2	DEXTER	RD	1055	Overhead	Distribution	Luminaire	LUM HPS RWY 100W	Active	100	65485-54003	S-14	CITY OF E PROVIDENCE
0022	000	2	DEXTER	RD	1055	Overhead	Distribution	Luminaire	LUM HPS RWY 50W	Active	50	65485-54003	S-14	CITY OF E PROVIDENCE
0023	050	2	DEXTER	RD	1055	Overhead	Distribution	Luminaire	LUM HPS RWY 100W	Active	100	65485-54003	S-14	CITY OF E PROVIDENCE
0002	000	2	DIANA	DR	1065	Overhead	Distribution	Luminaire	LUM HPS RWY 50W	Active	50	65485-54003	S-14	CITY OF E PROVIDENCE
0002	000	2	DODGE	ST	1070	Overhead	Distribution	Luminaire	LUM HPS RWY 50W	Active	50	65485-54003	S-14	CITY OF E PROVIDENCE
0006	000	2	DODGE	ST	1070	Overhead	Distribution	Luminaire	LUM HPS RWY 100W	Active	100	65485-54003	S-14	CITY OF E PROVIDENCE
0007	000	2	DODGE	ST	1070	Overhead	Distribution	Luminaire	LUM HPS RWY 100W TT	Temp Turn Off	100	65485-54003	S-14	CITY OF E PROVIDENCE
0008	000	1	DODGE	ST	1070	Overhead	Distribution	Luminaire	LUM HPS RWY 50W	Active	50	65485-54003	S-14	CITY OF E PROVIDENCE
0009	000	2	DODGE	ST	1070	Overhead	Distribution	Luminaire	LUM HPS RWY 100W TT	Temp Turn Off	100	65485-54003	S-14	CITY OF E PROVIDENCE
0010	000	1	DODGE	ST	1070	Overhead	Distribution	Luminaire	LUM HPS RWY 50W	Active	50	65485-54003	S-14	CITY OF E PROVIDENCE
0011	000	2	DODGE	ST	1070	Overhead	Distribution	Luminaire	LUM HPS RWY 100W	Active	100	65485-54003	S-14	CITY OF E PROVIDENCE
0012	000	2	DODGE	ST	1070	Overhead	Distribution	Luminaire	LUM HPS RWY 50W	Active	50	65485-54003	S-14	CITY OF E PROVIDENCE
0013	000	2	DODGE	ST	1070	Overhead	Distribution	Luminaire	LUM HPS RWY 50W	Active	50	65485-54003	S-14	CITY OF E PROVIDENCE
0014	000	2	DODGE	ST	1070	Overhead	Distribution	Luminaire	LUM HPS RWY 50W	Active	50	65485-54003	S-14	CITY OF E PROVIDENCE
0015	000	2	DODGE	ST	1070	Overhead	Distribution	Luminaire	LUM HPS RWY 50W	Active	50	65485-54003	S-14	CITY OF E PROVIDENCE
0001	000	2	DON	AVE	1075	Overhead	Distribution	Luminaire	LUM HPS RWY 50W	Active	50	65485-54003	S-14	CITY OF E PROVIDENCE
0003	000	2	DON	AVE	1075	Overhead	Distribution	Luminaire	LUM HPS RWY 50W	Active	50	65485-54003	S-14	CITY OF E PROVIDENCE
0005	000	2	DON	AVE	1075	Overhead	Distribution	Luminaire	LUM HPS RWY 50W TT	Temp Turn Off	50	65485-54003	S-14	CITY OF E PROVIDENCE
0006	000	2	DON	AVE	1075	Overhead	Distribution	Luminaire	LUM HPS RWY 50W	Active	50	65485-54003	S-14	CITY OF E PROVIDENCE
0007	000	2	DON	AVE	1075	Overhead	Distribution	Luminaire	LUM HPS RWY 50W TT	Temp Turn Off	50	65485-54003	S-14	CITY OF E PROVIDENCE
0008	000	2	DON	AVE	1075	Overhead	Distribution	Luminaire	LUM HPS RWY 50W	Active	50	65485-54003	S-14	CITY OF E PROVIDENCE
0009	000	2	DON	AVE	1075	Overhead	Distribution	Luminaire	LUM HPS RWY 50W	Active	50	65485-54003	S-14	CITY OF E PROVIDENCE
0011	000	2	DON	AVE	1075	Overhead	Distribution	Luminaire	LUM HPS RWY 50W	Active	50	65485-54003	S-14	CITY OF E PROVIDENCE
0013	000	2	DON	AVE	1075	Overhead	Distribution	Luminaire	LUM HPS RWY 50W	Active	50	65485-54003	S-14	CITY OF E PROVIDENCE
0014	000	2	DON	AVE	1075	Overhead	Distribution	Luminaire	LUM HPS RWY 50W	Active	50	65485-54003	S-14	CITY OF E PROVIDENCE
0016	000	2	DON	AVE	1075	Overhead	Distribution	Luminaire	LUM HPS RWY 50W	Active	50	65485-54003	S-14	CITY OF E PROVIDENCE
0018	000	2	DON	AVE	1075	Overhead	Distribution	Luminaire	LUM HPS RWY 50W	Active	50	65485-54003	S-14	CITY OF E PROVIDENCE
0020	000	2	DON	AVE	1075	Overhead	Distribution	Luminaire	LUM HPS RWY 50W	Active	50	65485-54003	S-14	CITY OF E PROVIDENCE
0021	000	1	DON	AVE	1075	Overhead	Distribution	Luminaire	LUM HPS RWY 50W	Inactive	50	65485-54003	S-14	CITY OF E PROVIDENCE
0023	000	1	DON	AVE	1075	Overhead	Distribution	Luminaire	LUM HPS RWY 50W	Inactive	50	65485-54003	S-14	CITY OF E PROVIDENCE
0025	000	1	DON	AVE	1075	Overhead	Distribution	Luminaire	LUM HPS RWY 50W	Inactive	50	65485-54003	S-14	CITY OF E PROVIDENCE
0026	000	1	DON	AVE	1075	Overhead	Distribution	Luminaire	LUM HPS RWY 50W	Inactive	50	65485-54003	S-14	CITY OF E PROVIDENCE
0027	000	1	DON	AVE	1075	Overhead	Distribution	Luminaire	LUM HPS RWY 50W	Inactive	50	65485-54003	S-14	CITY OF E PROVIDENCE
0001	000	2	DONNELLY	ST	1080	Overhead	Distribution	Luminaire	LUM HPS RWY 50W	Active	50	65485-54003	S-14	CITY OF E PROVIDENCE
0003	000	2	DONNELLY	ST	1080	Overhead	Distribution	Luminaire	LUM HPS RWY 50W	Active	50	65485-54003	S-14	CITY OF E PROVIDENCE
0001	000	2	DORO	PL	1085	Overhead	Distribution	Luminaire	LUM HPS RWY 50W TT	Temp Turn Off	50	65485-54003	S-14	CITY OF E PROVIDENCE
0002	000	2	DORO	PL	1085	Overhead	Distribution	Luminaire	LUM HPS RWY 50W	Active	50	65485-54003	S-14	CITY OF E PROVIDENCE
0005	000	2	DORO	PL	1085	Overhead	Distribution	Luminaire	LUM HPS RWY 50W	Active	50	65485-54003	S-14	CITY OF E PROVIDENCE
0001	000	2	DORR	AVE	1090	Overhead	Distribution	Luminaire	LUM HPS RWY 50W	Active	50	65485-54003	S-14	CITY OF E PROVIDENCE
0003	000	2	DORR	AVE	1090	Overhead	Distribution	Luminaire	LUM HPS RWY 50W TT	Temp Turn Off	50	65485-54003	S-14	CITY OF E PROVIDENCE
0004	000	2	DORR	AVE	1090	Overhead	Distribution	Luminaire	LUM HPS RWY 100W	Active	100	65485-54003	S-14	CITY OF E PROVIDENCE
0005	000	1	DORR	AVE	1090	Overhead	Distribution	Luminaire	LUM HPS RWY 50W	Active	50	65485-54003	S-14	CITY OF E PROVIDENCE
0006	000	1	DORR	AVE	1090	Overhead	Distribution	Luminaire	LUM HPS RWY 50W	Inactive	50	65485-54003	S-14	CITY OF E PROVIDENCE
0007	000	2	DORR	AVE	1090	Overhead	Distribution	Luminaire	LUM HPS RWY 100W	Active	100	65485-54003	S-14	CITY OF E PROVIDENCE
0008	000	2	DORR	AVE	1090	Overhead	Distribution	Luminaire	LUM HPS RWY 100W	Active	100	65485-54003	S-14	CITY OF E PROVIDENCE
0008	075	2	DORR	AVE	1090	Overhead	Distribution	Luminaire	LUM HPS RWY 50W TT	Temp Turn Off	50	65485-54003	S-14	CITY OF E PROVIDENCE
0009	000	2	DORR	AVE	1090	Overhead	Distribution	Luminaire	LUM HPS RWY 50W	Active	50	65485-54003	S-14	CITY OF E PROVIDENCE
0011	000	2	DORR	AVE	1090	Overhead	Distribution	Luminaire	LUM HPS RWY 50W	Active	50	65485-54003	S-14	CITY OF E PROVIDENCE
0001	000	2	DOVER	AVE	1100	Overhead	Distribution	Luminaire	LUM HPS RWY 50W TT	Temp Turn Off	50	65485-54003	S-14	CITY OF E PROVIDENCE
0002	000	2	DOVER	AVE	1100	Overhead	Distribution	Luminaire	LUM HPS RWY 50W	Active	50	65485-54003	S-14	CITY OF E PROVIDENCE
0004	000	2	DOVER	AVE	1100	Overhead	Distribution	Luminaire	LUM HPS RWY 50W	Active	50	65485-54003	S-14	CITY OF E PROVIDENCE
0005	000	2	DOVER	AVE	1100	Overhead	Distribution	Luminaire	LUM HPS RWY 50W TT	Temp Turn Off	50	90426-19008	S-14	CITY OF E PROVIDENCE
0006	000	2	DOVER	AVE	1100	Overhead	Distribution	Luminaire	LUM HPS RWY 50W TT	Temp Turn Off	50	65485-54003	S-14	CITY OF E PROVIDENCE
0008	000	2	DOVER	AVE	1100	Overhead	Distribution	Luminaire	LUM HPS RWY 50W	Active	50	65485-54003	S-14	CITY OF E PROVIDENCE

Pole No	Pole Suffix	Light Sequ No	Street Name	Street Suffix	Ngrid Line No	Source Type	Pole Use	Component Type	Bill Print and Tariff Description	Billing Status	Lamp Wattage	Account No	Rate	Customer Name
0010	000	1	DOVER	AVE	1100	Overhead	Distribution	Luminaire	LUM HPS RWY 100W	Active	100	65485-54003	S-14	CITY OF E PROVIDENCE
0012	000	2	DOVER	AVE	1100	Overhead	Distribution	Luminaire	LUM HPS RWY 50W	Active	50	65485-54003	S-14	CITY OF E PROVIDENCE
0014	000	2	DOVER	AVE	1100	Overhead	Distribution	Luminaire	LUM HPS RWY 50W TT	Temp Turn Off	50	65485-54003	S-14	CITY OF E PROVIDENCE
0016	000	2	DOVER	AVE	1100	Overhead	Distribution	Luminaire	LUM HPS RWY 50W	Active	50	65485-54003	S-14	CITY OF E PROVIDENCE
0017	000	2	DOVER	AVE	1100	Overhead	Distribution	Luminaire	LUM HPS RWY 50W	Active	50	65485-54003	S-14	CITY OF E PROVIDENCE
0019	000	2	DOVER	AVE	1100	Overhead	Distribution	Luminaire	LUM HPS RWY 50W	Active	50	65485-54003	S-14	CITY OF E PROVIDENCE
0020	000	2	DOVER	AVE	1100	Overhead	Distribution	Luminaire	LUM HPS RWY 50W TT	Temp Turn Off	50	65485-54003	S-14	CITY OF E PROVIDENCE
0021	000	2	DOVER	AVE	1100	Overhead	Distribution	Luminaire	LUM HPS RWY 50W	Active	50	65485-54003	S-14	CITY OF E PROVIDENCE
0024	000	2	DOVER	AVE	1100	Overhead	Distribution	Luminaire	LUM HPS RWY 50W	Active	50	65485-54003	S-14	CITY OF E PROVIDENCE
0025	000	2	DOVER	AVE	1100	Overhead	Distribution	Luminaire	LUM HPS RWY 50W TT	Temp Turn Off	50	90426-19008	S-14	CITY OF E PROVIDENCE
0026	000	2	DOVER	AVE	1100	Overhead	Distribution	Luminaire	LUM HPS RWY 50W TT	Temp Turn Off	50	90426-19008	S-14	CITY OF E PROVIDENCE
0027	000	2	DOVER	AVE	1100	Overhead	Distribution	Luminaire	LUM HPS RWY 50W	Active	50	65485-54003	S-14	CITY OF E PROVIDENCE
0028	000	2	DOVER	AVE	1100	Overhead	Distribution	Luminaire	LUM HPS RWY 50W TT	Temp Turn Off	50	90426-19008	S-14	CITY OF E PROVIDENCE
0029	000	2	DOVER	AVE	1100	Overhead	Distribution	Luminaire	LUM HPS RWY 50W	Active	50	65485-54003	S-14	CITY OF E PROVIDENCE
0029	075	2	DOVER	AVE	1100	Overhead	Distribution	Luminaire	LUM HPS RWY 50W	Active	50	65485-54003	S-14	CITY OF E PROVIDENCE
0030	000	2	DOVER	AVE	1100	Overhead	Distribution	Luminaire	LUM HPS RWY 50W TT	Temp Turn Off	50	90426-19008	S-14	CITY OF E PROVIDENCE
0032	000	2	DOVER	AVE	1100	Overhead	Distribution	Luminaire	LUM HPS RWY 50W	Active	50	65485-54003	S-14	CITY OF E PROVIDENCE
0035	000	2	DOVER	AVE	1100	Overhead	Distribution	Luminaire	LUM HPS RWY 50W	Active	50	65485-54003	S-14	CITY OF E PROVIDENCE
0036	000	2	DOVER	AVE	1100	Overhead	Distribution	Luminaire	LUM HPS RWY 50W TT	Temp Turn Off	50	90426-19008	S-14	CITY OF E PROVIDENCE
0002	000	2	DROWNE	PKWY	1105	Overhead	Distribution	Luminaire	LUM HPS RWY 50W	Active	50	65485-54003	S-14	CITY OF E PROVIDENCE
0004	000	2	DROWNE	PKWY	1105	Overhead	Distribution	Luminaire	LUM HPS RWY 50W	Active	50	65485-54003	S-14	CITY OF E PROVIDENCE
0006	000	2	DROWNE	PKWY	1105	Overhead	Distribution	Luminaire	LUM HPS RWY 50W	Active	50	65485-54003	S-14	CITY OF E PROVIDENCE
0008	000	2	DROWNE	PKWY	1105	Overhead	Distribution	Luminaire	LUM HPS RWY 50W	Active	50	65485-54003	S-14	CITY OF E PROVIDENCE
0001	000	2	DUNBAR	AVE	1110	Overhead	Distribution	Luminaire	LUM HPS RWY 50W TT	Temp Turn Off	50	65485-54003	S-14	CITY OF E PROVIDENCE
0003	000	2	DUNBAR	AVE	1110	Overhead	Distribution	Luminaire	LUM HPS RWY 50W	Active	50	65485-54003	S-14	CITY OF E PROVIDENCE
0005	000	2	DUNBAR	AVE	1110	Overhead	Distribution	Luminaire	LUM HPS RWY 50W	Active	50	65485-54003	S-14	CITY OF E PROVIDENCE
0007	000	2	DUNBAR	AVE	1110	Overhead	Distribution	Luminaire	LUM HPS RWY 50W	Active	50	65485-54003	S-14	CITY OF E PROVIDENCE
0009	000	2	DUNBAR	AVE	1110	Overhead	Distribution	Luminaire	LUM HPS RWY 50W	Active	50	65485-54003	S-14	CITY OF E PROVIDENCE
0001	000	2	DUNCAN	RD	1115	Overhead	Distribution	Luminaire	LUM HPS RWY 50W	Active	50	65485-54003	S-14	CITY OF E PROVIDENCE
0003	000	2	DUNCAN	RD	1115	Overhead	Distribution	Luminaire	LUM HPS RWY 50W	Active	50	65485-54003	S-14	CITY OF E PROVIDENCE
0002	000	2	DYER	AVE	1130	Overhead	Distribution	Luminaire	LUM HPS RWY 50W	Active	50	65485-54003	S-14	CITY OF E PROVIDENCE
0004	000	2	DYER	AVE	1130	Overhead	Distribution	Luminaire	LUM HPS RWY 50W	Active	50	65485-54003	S-14	CITY OF E PROVIDENCE
0006	000	2	DYER	AVE	1130	Overhead	Distribution	Luminaire	LUM HPS RWY 50W	Active	50	65485-54003	S-14	CITY OF E PROVIDENCE
0007	000	2	DYER	AVE	1130	Overhead	Distribution	Luminaire	LUM HPS RWY 50W	Active	50	65485-54003	S-14	CITY OF E PROVIDENCE
0009	000	2	DYER	AVE	1130	Overhead	Distribution	Luminaire	LUM HPS RWY 50W	Active	50	65485-54003	S-14	CITY OF E PROVIDENCE
0011	000	2	DYER	AVE	1130	Overhead	Distribution	Luminaire	LUM HPS RWY 50W	Active	50	65485-54003	S-14	CITY OF E PROVIDENCE
0013	000	2	DYER	AVE	1130	Overhead	Distribution	Luminaire	LUM HPS RWY 50W	Active	50	65485-54003	S-14	CITY OF E PROVIDENCE
0014	000	2	DYER	AVE	1130	Overhead	Distribution	Luminaire	LUM HPS RWY 50W	Active	50	65485-54003	S-14	CITY OF E PROVIDENCE
0018	000	2	DYER	AVE	1130	Overhead	Distribution	Luminaire	LUM HPS RWY 50W	Active	50	65485-54003	S-14	CITY OF E PROVIDENCE
0019	000	2	DYER	AVE	1130	Overhead	Distribution	Luminaire	LUM HPS RWY 50W	Active	50	65485-54003	S-14	CITY OF E PROVIDENCE
0021	000	2	DYER	AVE	1130	Overhead	Distribution	Luminaire	LUM HPS RWY 50W	Active	50	65485-54003	S-14	CITY OF E PROVIDENCE
0000	050	2	EARL	AVE	1135	Overhead	Distribution	Luminaire	LUM HPS RWY 50W	Active	50	65485-54003	S-14	CITY OF E PROVIDENCE
0003	000	2	EARL	AVE	1135	Overhead	Distribution	Luminaire	LUM HPS RWY 50W TT	Temp Turn Off	50	65485-54003	S-14	CITY OF E PROVIDENCE
0004	000	2	EARL	AVE	1135	Overhead	Distribution	Luminaire	LUM HPS RWY 50W	Active	50	65485-54003	S-14	CITY OF E PROVIDENCE
0007	000	2	EARL	AVE	1135	Overhead	Distribution	Luminaire	LUM HPS RWY 50W TT	Temp Turn Off	50	65485-54003	S-14	CITY OF E PROVIDENCE
0008	000	2	EARL	AVE	1135	Overhead	Distribution	Luminaire	LUM HPS RWY 50W TT	Temp Turn Off	50	65485-54003	S-14	CITY OF E PROVIDENCE
0010	000	2	EARL	AVE	1135	Overhead	Distribution	Luminaire	LUM HPS RWY 50W TT	Temp Turn Off	50	65485-54003	S-14	CITY OF E PROVIDENCE
0011	000	2	EARL	AVE	1135	Overhead	Distribution	Luminaire	LUM HPS RWY 50W	Active	50	65485-54003	S-14	CITY OF E PROVIDENCE
0015	000	2	EARL	AVE	1135	Overhead	Distribution	Luminaire	LUM HPS RWY 50W	Active	50	65485-54003	S-14	CITY OF E PROVIDENCE
0001	000	2	EAST	ST	1140	Overhead	Distribution	Luminaire	LUM HPS RWY 50W TT	Temp Turn Off	50	65485-54003	S-14	CITY OF E PROVIDENCE
0002	000	1	EAST	ST	1140	Overhead	Distribution	Luminaire	LUM HPS RWY 100W	Inactive	100	65485-54003	S-14	CITY OF E PROVIDENCE
0006	000	2	EAST	ST	1140	Overhead	Distribution	Luminaire	LUM HPS RWY 50W TT	Temp Turn Off	50	65485-54003	S-14	CITY OF E PROVIDENCE
0001	000	2	EAST KNOWLTON	ST	1145	Overhead	Distribution	Luminaire	LUM HPS RWY 50W	Active	50	65485-54003	S-14	CITY OF E PROVIDENCE
0002	000	2	EAST KNOWLTON	ST	1145	Overhead	Distribution	Luminaire	LUM HPS RWY 50W	Active	50	65485-54003	S-14	CITY OF E PROVIDENCE
0005	000	2	EAST KNOWLTON	ST	1145	Overhead	Distribution	Luminaire	LUM HPS RWY 50W	Active	50	65485-54003	S-14	CITY OF E PROVIDENCE

Pole No	Pole Suffix	Light Sequ No	Street Name	Street Suffix	Ngrid Line No	Source Type	Pole Use	Component Type	Bill Print and Tariff Description	Billing Status	Lamp Wattage	Account No	Rate	Customer Name
0005	000	2	EASTERN	AVE	1150	Overhead	Distribution	Luminaire	LUM HPS RWY 50W	Active	50	65485-54003	S-14	CITY OF E PROVIDENCE
0010	000	2	EASTERN	AVE	1150	Overhead	Distribution	Luminaire	LUM HPS RWY 50W	Active	50	65485-54003	S-14	CITY OF E PROVIDENCE
0011	000	2	EASTERN	AVE	1150	Overhead	Distribution	Luminaire	LUM HPS RWY 50W	Active	50	65485-54003	S-14	CITY OF E PROVIDENCE
0012	000	2	EASTERN	AVE	1150	Overhead	Distribution	Luminaire	LUM HPS RWY 50W	Active	50	65485-54003	S-14	CITY OF E PROVIDENCE
0013	000	2	EASTERN	AVE	1150	Overhead	Distribution	Luminaire	LUM HPS RWY 50W TT	Temp Turn Off	50	65485-54003	S-14	CITY OF E PROVIDENCE
0014	000	2	EASTERN	AVE	1150	Overhead	Distribution	Luminaire	LUM HPS RWY 50W	Active	50	65485-54003	S-14	CITY OF E PROVIDENCE
0018	000	2	EDMUND	ST	1155	Overhead	Distribution	Luminaire	LUM HPS RWY 50W	Active	50	65485-54003	S-14	CITY OF E PROVIDENCE
0020	000	2	EDMUND	ST	1155	Overhead	Distribution	Luminaire	LUM HPS RWY 50W	Active	50	65485-54003	S-14	CITY OF E PROVIDENCE
0022	000	2	EDMUND	ST	1155	Overhead	Distribution	Luminaire	LUM HPS RWY 50W	Active	50	65485-54003	S-14	CITY OF E PROVIDENCE
0001	000	2	EDWARD	AVE	1165	Overhead	Distribution	Luminaire	LUM HPS RWY 50W TT	Temp Turn Off	50	65485-54003	S-14	CITY OF E PROVIDENCE
0002	000	2	EDWARD	AVE	1165	Overhead	Distribution	Luminaire	LUM HPS RWY 50W	Active	50	65485-54003	S-14	CITY OF E PROVIDENCE
0009	000	2	EDWARD	AVE	1165	Overhead	Distribution	Luminaire	LUM HPS RWY 50W	Active	50	65485-54003	S-14	CITY OF E PROVIDENCE
0010	000	2	EDWARD	AVE	1165	Overhead	Distribution	Luminaire	LUM HPS RWY 50W	Active	50	65485-54003	S-14	CITY OF E PROVIDENCE
0002	000	2	EIGHTH	ST	1170	Overhead	Distribution	Luminaire	LUM HPS RWY 50W	Active	50	65485-54003	S-14	CITY OF E PROVIDENCE
0004	000	2	EIGHTH	ST	1170	Overhead	Distribution	Luminaire	LUM HPS RWY 50W	Active	50	65485-54003	S-14	CITY OF E PROVIDENCE
0007	000	2	EIGHTH	ST	1170	Overhead	Distribution	Luminaire	LUM HPS RWY 50W	Active	50	65485-54003	S-14	CITY OF E PROVIDENCE
0009	000	2	EIGHTH	ST	1170	Overhead	Distribution	Luminaire	LUM HPS RWY 50W	Active	50	65485-54003	S-14	CITY OF E PROVIDENCE
0002	000	2	ELDER	AVE	1175	Overhead	Distribution	Luminaire	LUM HPS RWY 50W	Active	50	90426-19008	S-14	CITY OF E PROVIDENCE
0005	000	2	ELDER	AVE	1175	Overhead	Distribution	Luminaire	LUM HPS RWY 50W	Active	50	90426-19008	S-14	CITY OF E PROVIDENCE
0007	000	2	ELDER	AVE	1175	Overhead	Distribution	Luminaire	LUM HPS RWY 50W	Active	50	90426-19008	S-14	CITY OF E PROVIDENCE
0009	000	2	ELDER	AVE	1175	Overhead	Distribution	Luminaire	LUM HPS RWY 50W	Active	50	90426-19008	S-14	CITY OF E PROVIDENCE
0011	000	2	ELDER	AVE	1175	Overhead	Distribution	Luminaire	LUM HPS RWY 50W	Active	50	90426-19008	S-14	CITY OF E PROVIDENCE
0013	000	1	ELDER	AVE	1175	Overhead	Distribution	Luminaire	LUM HPS RWY 50W	Inactive	50	90426-19008	S-14	CITY OF E PROVIDENCE
0002	000	2	ELINORA	ST	1180	Overhead	Distribution	Luminaire	LUM HPS RWY 50W	Active	50	65485-54003	S-14	CITY OF E PROVIDENCE
0004	000	2	ELINORA	ST	1180	Overhead	Distribution	Luminaire	LUM HPS RWY 50W TT	Temp Turn Off	50	65485-54003	S-14	CITY OF E PROVIDENCE
0001	000	2	ELIZABETH	ST	1185	Overhead	Distribution	Luminaire	LUM HPS RWY 50W	Active	50	65485-54003	S-14	CITY OF E PROVIDENCE
0001	000	2	ELLIS	ST	1190	Overhead	Distribution	Luminaire	LUM HPS RWY 50W	Active	50	65485-54003	S-14	CITY OF E PROVIDENCE
0003	000	2	ELLIS	ST	1190	Overhead	Distribution	Luminaire	LUM HPS RWY 50W	Active	50	65485-54003	S-14	CITY OF E PROVIDENCE
0005	000	2	ELLIS	ST	1190	Overhead	Distribution	Luminaire	LUM HPS RWY 50W	Active	50	65485-54003	S-14	CITY OF E PROVIDENCE
0001	000	2	ELM	AVE	1195	Overhead	Distribution	Luminaire	LUM HPS RWY 50W	Active	50	65485-54003	S-14	CITY OF E PROVIDENCE
0002	000	2	ELM	AVE	1195	Overhead	Distribution	Luminaire	LUM HPS RWY 100W	Active	100	65485-54003	S-14	CITY OF E PROVIDENCE
0004	000	1	ELM	AVE	1195	Overhead	Distribution	Luminaire	LUM HPS RWY 50W	Active	50	65485-54003	S-14	CITY OF E PROVIDENCE
0006	000	2	ELM	AVE	1195	Overhead	Distribution	Luminaire	LUM HPS RWY 100W	Active	100	65485-54003	S-14	CITY OF E PROVIDENCE
0001	000	2	ELM	CT	1200	Overhead	Distribution	Luminaire	LUM HPS RWY 50W	Active	50	65485-54003	S-14	CITY OF E PROVIDENCE
0003	000	2	ELM	CT	1200	Overhead	Distribution	Luminaire	LUM HPS RWY 50W	Active	50	65485-54003	S-14	CITY OF E PROVIDENCE
0002	000	2	ELMSGATE	WAY	1205	Overhead	Distribution	Luminaire	LUM HPS RWY 50W	Active	50	65485-54003	S-14	CITY OF E PROVIDENCE
0003	000	2	ELMSGATE	WAY	1205	Overhead	Distribution	Luminaire	LUM HPS RWY 50W	Active	50	65485-54003	S-14	CITY OF E PROVIDENCE
0001	000	2	ELMWOOD	DR	1210	Overhead	Distribution	Luminaire	LUM HPS RWY 50W	Active	50	65485-54003	S-14	CITY OF E PROVIDENCE
0003	000	2	ELMWOOD	DR	1210	Overhead	Distribution	Luminaire	LUM HPS RWY 50W	Active	50	65485-54003	S-14	CITY OF E PROVIDENCE
0005	000	2	ELMWOOD	DR	1210	Overhead	Distribution	Luminaire	LUM HPS RWY 50W	Active	50	65485-54003	S-14	CITY OF E PROVIDENCE
0002	000	2	ELSON	DR	1215	Overhead	Distribution	Luminaire	LUM HPS RWY 50W	Active	50	65485-54003	S-14	CITY OF E PROVIDENCE
0004	000	2	ELSON	DR	1215	Overhead	Distribution	Luminaire	LUM HPS RWY 50W	Active	50	65485-54003	S-14	CITY OF E PROVIDENCE
0006	000	1	ELSON	DR	1215	Overhead	Distribution	Luminaire	LUM HPS RWY 100W	Active	100	65485-54003	S-14	CITY OF E PROVIDENCE
0002	000	2	EMPIRE	ST	1225	Overhead	Distribution	Luminaire	LUM HPS RWY 50W	Active	50	65485-54003	S-14	CITY OF E PROVIDENCE
0004	000	2	EMPIRE	ST	1225	Overhead	Distribution	Luminaire	LUM HPS RWY 50W	Active	50	65485-54003	S-14	CITY OF E PROVIDENCE
0001	000	2	ESTELLE	ST	1235	Overhead	Distribution	Luminaire	LUM HPS RWY 50W	Active	50	90426-19008	S-14	CITY OF E PROVIDENCE
0001	000	2	ESTRELL	DR	1240	Overhead	Distribution	Luminaire	LUM HPS RWY 50W TT	Temp Turn Off	50	65485-54003	S-14	CITY OF E PROVIDENCE
0002	000	2	ESTRELL	DR	1240	Overhead	Distribution	Luminaire	LUM HPS RWY 50W	Active	50	65485-54003	S-14	CITY OF E PROVIDENCE
0003	000	2	ESTRELL	DR	1240	Overhead	Distribution	Luminaire	LUM HPS RWY 50W TT	Temp Turn Off	50	65485-54003	S-14	CITY OF E PROVIDENCE
0004	000	2	ESTRELL	DR	1240	Overhead	Distribution	Luminaire	LUM HPS RWY 50W	Active	50	65485-54003	S-14	CITY OF E PROVIDENCE
0005	000	2	ESTRELL	DR	1240	Overhead	Distribution	Luminaire	LUM HPS RWY 50W	Active	50	65485-54003	S-14	CITY OF E PROVIDENCE
0007	000	2	ESTRELL	DR	1240	Overhead	Distribution	Luminaire	LUM HPS RWY 50W TT	Temp Turn Off	50	65485-54003	S-14	CITY OF E PROVIDENCE
0009	000	2	ESTRELL	DR	1240	Overhead	Distribution	Luminaire	LUM HPS RWY 50W	Active	50	65485-54003	S-14	CITY OF E PROVIDENCE
0011	000	2	ESTRELL	DR	1240	Overhead	Distribution	Luminaire	LUM HPS RWY 50W	Active	50	65485-54003	S-14	CITY OF E PROVIDENCE
0012	000	2	ESTRELL	DR	1240	Overhead	Distribution	Luminaire	LUM HPS RWY 50W	Active	50	65485-54003	S-14	CITY OF E PROVIDENCE

Pole No	Pole Suffix	Light Sequ No	Street Name	Street Suffix	Ngrid Line No	Source Type	Pole Use	Component Type	Bill Print and Tariff Description	Billing Status	Lamp Wattage	Account No	Rate	Customer Name
0013	000	2	ESTRELL	DR	1240	Overhead	Distribution	Luminaire	LUM HPS RWY 50W TT	Temp Turn Off	50	65485-54003	S-14	CITY OF E PROVIDENCE
0014	000	2	ESTRELL	DR	1240	Overhead	Distribution	Luminaire	LUM HPS RWY 50W	Active	50	65485-54003	S-14	CITY OF E PROVIDENCE
0015	000	2	ESTRELL	DR	1240	Overhead	Distribution	Luminaire	LUM HPS RWY 50W	Active	50	65485-54003	S-14	CITY OF E PROVIDENCE
0017	000	1	ESTRELL	DR	1240	Overhead	Distribution	Luminaire	LUM HPS RWY 50W	Inactive	50	65485-54003	S-14	CITY OF E PROVIDENCE
0018	000	2	ESTRELL	DR	1240	Overhead	Distribution	Luminaire	LUM HPS RWY 50W	Active	50	65485-54003	S-14	CITY OF E PROVIDENCE
0002	000	1	EUCLID	AVE	1245	Overhead	Distribution	Luminaire	LUM HPS RWY 250W	Active	250	65485-54003	S-14	CITY OF E PROVIDENCE
0004	000	2	EUCLID	AVE	1245	Overhead	Distribution	Luminaire	LUM HPS RWY 50W	Active	50	65485-54003	S-14	CITY OF E PROVIDENCE
0006	000	2	EUCLID	AVE	1245	Overhead	Distribution	Luminaire	LUM HPS RWY 50W	Active	50	65485-54003	S-14	CITY OF E PROVIDENCE
0007	000	2	EUCLID	AVE	1245	Overhead	Distribution	Luminaire	LUM HPS RWY 50W	Active	50	65485-54003	S-14	CITY OF E PROVIDENCE
0009	000	2	EUCLID	AVE	1245	Overhead	Distribution	Luminaire	LUM HPS RWY 50W	Active	50	65485-54003	S-14	CITY OF E PROVIDENCE
0011	000	2	EUCLID	AVE	1245	Overhead	Distribution	Luminaire	LUM HPS RWY 50W	Active	50	65485-54003	S-14	CITY OF E PROVIDENCE
0012	000	2	EUCLID	AVE	1245	Overhead	Distribution	Luminaire	LUM HPS RWY 50W	Active	50	65485-54003	S-14	CITY OF E PROVIDENCE
0001	000	0	EVERGREEN	DR	1247	Underground	Street Lighting	Pole	POLE METAL W/BASE	Active	0	65485-54003	S-14	CITY OF E PROVIDENCE
0001	000	1	EVERGREEN	DR	1247	Underground	Street Lighting	Luminaire	LUM HPS RWY 100W	Active	100	65485-54003	S-14	CITY OF E PROVIDENCE
0002	000	0	EVERGREEN	DR	1247	Underground	Street Lighting	Pole	POLE METAL =>25FT	Inactive	0	65485-54003	S-14	CITY OF E PROVIDENCE
0002	000	1	EVERGREEN	DR	1247	Underground	Street Lighting	Luminaire	LUM HPS RWY 100W TT	Temp Turn Off	100	65485-54003	S-14	CITY OF E PROVIDENCE
0003	000	0	EVERGREEN	DR	1247	Underground	Street Lighting	Pole	POLE METAL W/BASE	Active	0	65485-54003	S-14	CITY OF E PROVIDENCE
0003	000	2	EVERGREEN	DR	1247	Underground	Street Lighting	Luminaire	LUM HPS RWY 100W	Active	100	65485-54003	S-14	CITY OF E PROVIDENCE
0004	000	0	EVERGREEN	DR	1247	Underground	Street Lighting	Pole	POLE METAL W/BASE	Inactive	0	65485-54003	S-14	CITY OF E PROVIDENCE
0004	000	1	EVERGREEN	DR	1247	Underground	Street Lighting	Luminaire	LUM HPS RWY 100W	Red Cap Perm	100	65485-54003	S-14	CITY OF E PROVIDENCE
0005	000	0	EVERGREEN	DR	1247	Underground	Street Lighting	Pole	POLE METAL W/BASE	Active	0	65485-54003	S-14	CITY OF E PROVIDENCE
0005	000	1	EVERGREEN	DR	1247	Underground	Street Lighting	Luminaire	LUM HPS RWY 100W	Active	100	65485-54003	S-14	CITY OF E PROVIDENCE
0006	000	0	EVERGREEN	DR	1247	Underground	Street Lighting	Pole	POLE METAL W/BASE	Inactive	0	65485-54003	S-14	CITY OF E PROVIDENCE
0006	000	1	EVERGREEN	DR	1247	Underground	Street Lighting	Luminaire	LUM HPS RWY 100W	Red Cap Perm	100	65485-54003	S-14	CITY OF E PROVIDENCE
0007	000	0	EVERGREEN	DR	1247	Underground	Street Lighting	Pole	POLE METAL W/BASE	Active	0	65485-54003	S-14	CITY OF E PROVIDENCE
0007	000	1	EVERGREEN	DR	1247	Underground	Street Lighting	Luminaire	LUM HPS RWY 100W	Active	100	65485-54003	S-14	CITY OF E PROVIDENCE
0008	000	0	EVERGREEN	DR	1247	Underground	Street Lighting	Pole	POLE METAL W/BASE	Inactive	0	65485-54003	S-14	CITY OF E PROVIDENCE
0008	000	1	EVERGREEN	DR	1247	Underground	Street Lighting	Luminaire	LUM HPS RWY 100W	Red Cap Perm	100	65485-54003	S-14	CITY OF E PROVIDENCE
0001	050	2	FAIRBANKS	AVE	1250	Overhead	Distribution	Luminaire	LUM HPS RWY 50W	Active	50	90426-19008	S-14	CITY OF E PROVIDENCE
0003	000	2	FAIRBANKS	AVE	1250	Overhead	Distribution	Luminaire	LUM HPS RWY 50W	Active	50	65485-54003	S-14	CITY OF E PROVIDENCE
0001	000	2	FAIRFIELD	AVE	1255	Overhead	Distribution	Luminaire	LUM HPS RWY 50W TT	Temp Turn Off	50	65485-54003	S-14	CITY OF E PROVIDENCE
0001	050	2	FAIRFIELD	AVE	1255	Overhead	Distribution	Luminaire	LUM HPS RWY 50W TT	Temp Turn Off	50	65485-54003	S-14	CITY OF E PROVIDENCE
0002	000	2	FAIRFIELD	AVE	1255	Overhead	Distribution	Luminaire	LUM HPS RWY 50W	Active	50	65485-54003	S-14	CITY OF E PROVIDENCE
0003	000	2	FAIRFIELD	AVE	1255	Overhead	Distribution	Luminaire	LUM HPS RWY 50W	Active	50	65485-54003	S-14	CITY OF E PROVIDENCE
0232	050	2	FAIRFIELD	AVE	1255	Overhead	Distribution	Luminaire	LUM HPS RWY 50W	Active	50	65485-54003	S-14	CITY OF E PROVIDENCE
0001	000	1	FAIRMOUNT	AVE	1260	Overhead	Distribution	Luminaire	LUM HPS RWY 100W	Active	100	65485-54003	S-14	CITY OF E PROVIDENCE
0003	000	2	FAIRMOUNT	AVE	1260	Overhead	Distribution	Luminaire	LUM HPS RWY 50W	Active	50	65485-54003	S-14	CITY OF E PROVIDENCE
0001	000	2	FAIRVIEW	AVE	1265	Overhead	Distribution	Luminaire	LUM HPS RWY 50W	Active	50	90426-19008	S-14	CITY OF E PROVIDENCE
0002	000	2	FAIRVIEW	AVE	1265	Overhead	Distribution	Luminaire	LUM HPS RWY 50W	Active	50	90426-19008	S-14	CITY OF E PROVIDENCE
0005	000	2	FAIRVIEW	AVE	1265	Overhead	Distribution	Luminaire	LUM HPS RWY 50W	Active	50	90426-19008	S-14	CITY OF E PROVIDENCE
0001	000	2	FAITH	ST	1270	Overhead	Distribution	Luminaire	LUM HPS RWY 50W TT	Temp Turn Off	50	65485-54003	S-14	CITY OF E PROVIDENCE
0002	000	2	FAITH	ST	1270	Overhead	Distribution	Luminaire	LUM HPS RWY 50W	Active	50	65485-54003	S-14	CITY OF E PROVIDENCE
0003	000	2	FAITH	ST	1270	Overhead	Distribution	Luminaire	LUM HPS RWY 50W	Active	50	65485-54003	S-14	CITY OF E PROVIDENCE
0004	000	2	FAITH	ST	1270	Overhead	Distribution	Luminaire	LUM HPS RWY 50W	Active	50	65485-54003	S-14	CITY OF E PROVIDENCE
0001	000	2	FALES	ST	1275	Overhead	Distribution	Luminaire	LUM HPS RWY 50W	Active	50	65485-54003	S-14	CITY OF E PROVIDENCE
0003	000	2	FALES	ST	1275	Overhead	Distribution	Luminaire	LUM HPS RWY 50W	Active	50	65485-54003	S-14	CITY OF E PROVIDENCE
0001	000	2	FARNUM	ST	1280	Overhead	Distribution	Luminaire	LUM HPS RWY 50W	Active	50	65485-54003	S-14	CITY OF E PROVIDENCE
0002	000	2	FARNUM	ST	1280	Overhead	Distribution	Luminaire	LUM HPS RWY 50W TT	Temp Turn Off	50	65485-54003	S-14	CITY OF E PROVIDENCE
0003	000	2	FARNUM	ST	1280	Overhead	Distribution	Luminaire	LUM HPS RWY 50W	Active	50	65485-54003	S-14	CITY OF E PROVIDENCE
0005	000	2	FARNUM	ST	1280	Overhead	Distribution	Luminaire	LUM HPS RWY 50W	Active	50	65485-54003	S-14	CITY OF E PROVIDENCE
0007	000	2	FARNUM	ST	1280	Overhead	Distribution	Luminaire	LUM HPS RWY 50W	Active	50	65485-54003	S-14	CITY OF E PROVIDENCE
0009	000	2	FARNUM	ST	1280	Overhead	Distribution	Luminaire	LUM HPS RWY 50W	Active	50	65485-54003	S-14	CITY OF E PROVIDENCE
0011	000	2	FARNUM	ST	1280	Overhead	Distribution	Luminaire	LUM HPS RWY 50W TT	Temp Turn Off	50	65485-54003	S-14	CITY OF E PROVIDENCE
0012	000	2	FARNUM	ST	1280	Overhead	Distribution	Luminaire	LUM HPS RWY 50W	Active	50	65485-54003	S-14	CITY OF E PROVIDENCE
0001	000	1	FARRELL	PL	1285	Overhead	Distribution	Luminaire	LUM HPS RWY 50W	Active	50	65485-54003	S-14	CITY OF E PROVIDENCE

Pole No	Pole Suffix	Light Sequ No	Street Name	Street Suffix	Ngrid Line No	Source Type	Pole Use	Component Type	Bill Print and Tariff Description	Billing Status	Lamp Wattage	Account No	Rate	Customer Name
0001	000	2	FENMOOR	ST	1290	Overhead	Distribution	Luminaire	LUM HPS RWY 50W	Active	50	65485-54003	S-14	CITY OF E PROVIDENCE
0003	000	2	FENMOOR	ST	1290	Overhead	Distribution	Luminaire	LUM HPS RWY 50W	Active	50	65485-54003	S-14	CITY OF E PROVIDENCE
0005	000	2	FENMOOR	ST	1290	Overhead	Distribution	Luminaire	LUM HPS RWY 50W	Active	50	65485-54003	S-14	CITY OF E PROVIDENCE
0007	000	2	FENMOOR	ST	1290	Overhead	Distribution	Luminaire	LUM HPS RWY 50W TT	Temp Turn Off	50	65485-54003	S-14	CITY OF E PROVIDENCE
0008	000	2	FENMOOR	ST	1290	Overhead	Distribution	Luminaire	LUM HPS RWY 50W	Active	50	65485-54003	S-14	CITY OF E PROVIDENCE
0001	000	2	FENNER	AVE	1295	Overhead	Distribution	Luminaire	LUM HPS RWY 50W	Active	50	65485-54003	S-14	CITY OF E PROVIDENCE
0003	000	2	FENNER	AVE	1295	Overhead	Distribution	Luminaire	LUM HPS RWY 50W	Active	50	65485-54003	S-14	CITY OF E PROVIDENCE
0005	000	2	FENNER	AVE	1295	Overhead	Distribution	Luminaire	LUM HPS RWY 50W TT	Temp Turn Off	50	65485-54003	S-14	CITY OF E PROVIDENCE
0006	000	2	FENNER	AVE	1295	Overhead	Distribution	Luminaire	LUM HPS RWY 50W	Active	50	65485-54003	S-14	CITY OF E PROVIDENCE
0007	000	2	FENNER	AVE	1295	Overhead	Distribution	Luminaire	LUM HPS RWY 50W TT	Temp Turn Off	50	65485-54003	S-14	CITY OF E PROVIDENCE
0008	000	2	FENNER	AVE	1295	Overhead	Distribution	Luminaire	LUM HPS RWY 50W	Active	50	65485-54003	S-14	CITY OF E PROVIDENCE
0009	000	2	FENNER	AVE	1295	Overhead	Distribution	Luminaire	LUM HPS RWY 50W TT	Temp Turn Off	50	65485-54003	S-14	CITY OF E PROVIDENCE
0011	000	2	FENNER	AVE	1295	Overhead	Distribution	Luminaire	LUM HPS RWY 50W	Active	50	65485-54003	S-14	CITY OF E PROVIDENCE
0013	000	2	FENNER	AVE	1295	Overhead	Distribution	Luminaire	LUM HPS RWY 50W TT	Temp Turn Off	50	65485-54003	S-14	CITY OF E PROVIDENCE
0014	000	2	FENNER	AVE	1295	Overhead	Distribution	Luminaire	LUM HPS RWY 50W	Active	50	65485-54003	S-14	CITY OF E PROVIDENCE
0015	000	2	FENNER	AVE	1295	Overhead	Distribution	Luminaire	LUM HPS RWY 50W TT	Temp Turn Off	50	65485-54003	S-14	CITY OF E PROVIDENCE
0016	000	2	FENNER	AVE	1295	Overhead	Distribution	Luminaire	LUM HPS RWY 50W	Active	50	65485-54003	S-14	CITY OF E PROVIDENCE
0017	000	2	FENNER	AVE	1295	Overhead	Distribution	Luminaire	LUM HPS RWY 50W TT	Temp Turn Off	50	65485-54003	S-14	CITY OF E PROVIDENCE
0001	000	2	FENWICK	RD	1300	Overhead	Distribution	Luminaire	LUM HPS RWY 50W TT	Temp Turn Off	50	65485-54003	S-14	CITY OF E PROVIDENCE
0003	000	2	FENWICK	RD	1300	Overhead	Distribution	Luminaire	LUM HPS RWY 50W	Active	50	65485-54003	S-14	CITY OF E PROVIDENCE
0005	000	2	FENWICK	RD	1300	Overhead	Distribution	Luminaire	LUM HPS RWY 50W	Active	50	65485-54003	S-14	CITY OF E PROVIDENCE
0001	000	2	FERNCREST	DR	1310	Overhead	Distribution	Luminaire	LUM HPS RWY 50W TT	Temp Turn Off	50	65485-54003	S-14	CITY OF E PROVIDENCE
0003	000	2	FERNCREST	DR	1310	Overhead	Distribution	Luminaire	LUM HPS RWY 50W	Active	50	65485-54003	S-14	CITY OF E PROVIDENCE
0005	000	2	FERNCREST	DR	1310	Overhead	Distribution	Luminaire	LUM HPS RWY 50W	Active	50	65485-54003	S-14	CITY OF E PROVIDENCE
0007	000	2	FERNCREST	DR	1310	Overhead	Distribution	Luminaire	LUM HPS RWY 50W	Active	50	65485-54003	S-14	CITY OF E PROVIDENCE
0009	000	2	FERNCREST	DR	1310	Overhead	Distribution	Luminaire	LUM HPS RWY 50W TT	Temp Turn Off	50	65485-54003	S-14	CITY OF E PROVIDENCE
0011	000	2	FERNCREST	DR	1310	Overhead	Distribution	Luminaire	LUM HPS RWY 50W	Active	50	65485-54003	S-14	CITY OF E PROVIDENCE
0001	000	1	FERRIS	AVE	1315	Overhead	Distribution	Luminaire	LUM HPS RWY 100W	Active	100	65485-54003	S-14	CITY OF E PROVIDENCE
0003	000	1	FERRIS	AVE	1315	Overhead	Distribution	Luminaire	LUM HPS RWY 100W	Active	100	65485-54003	S-14	CITY OF E PROVIDENCE
0005	000	1	FERRIS	AVE	1315	Overhead	Distribution	Luminaire	LUM HPS RWY 100W	Active	100	65485-54003	S-14	CITY OF E PROVIDENCE
0007	000	1	FERRIS	AVE	1315	Overhead	Distribution	Luminaire	LUM HPS RWY 100W	Active	100	65485-54003	S-14	CITY OF E PROVIDENCE
0008	000	1	FERRIS	AVE	1315	Overhead	Distribution	Luminaire	LUM HPS RWY 50W	Active	50	65485-54003	S-14	CITY OF E PROVIDENCE
0009	000	2	FERRIS	AVE	1315	Overhead	Distribution	Luminaire	LUM HPS RWY 100W TT	Temp Turn Off	100	65485-54003	S-14	CITY OF E PROVIDENCE
0010	000	1	FERRIS	AVE	1315	Overhead	Distribution	Luminaire	LUM HPS RWY 50W	Active	50	65485-54003	S-14	CITY OF E PROVIDENCE
0012	000	1	FERRIS	AVE	1315	Overhead	Distribution	Luminaire	LUM HPS RWY 50W	Active	50	65485-54003	S-14	CITY OF E PROVIDENCE
0014	000	1	FERRIS	AVE	1315	Overhead	Distribution	Luminaire	LUM HPS RWY 50W	Active	50	65485-54003	S-14	CITY OF E PROVIDENCE
0016	000	1	FERRIS	AVE	1315	Overhead	Distribution	Luminaire	LUM HPS RWY 50W	Active	50	65485-54003	S-14	CITY OF E PROVIDENCE
0018	000	1	FERRIS	AVE	1315	Overhead	Distribution	Luminaire	LUM HPS RWY 50W	Active	50	65485-54003	S-14	CITY OF E PROVIDENCE
0021	000	1	FERRIS	AVE	1315	Overhead	Distribution	Luminaire	LUM HPS RWY 50W	Active	50	65485-54003	S-14	CITY OF E PROVIDENCE
0023	000	1	FERRIS	AVE	1315	Overhead	Distribution	Luminaire	LUM HPS RWY 50W	Active	50	65485-54003	S-14	CITY OF E PROVIDENCE
0024	000	1	FERRIS	AVE	1315	Overhead	Distribution	Luminaire	LUM HPS RWY 50W	Active	50	65485-54003	S-14	CITY OF E PROVIDENCE
0025	000	1	FERRIS	AVE	1315	Overhead	Distribution	Luminaire	LUM HPS RWY 50W	Active	50	65485-54003	S-14	CITY OF E PROVIDENCE
0027	000	1	FERRIS	AVE	1315	Overhead	Distribution	Luminaire	LUM HPS RWY 50W	Active	50	65485-54003	S-14	CITY OF E PROVIDENCE
0028	000	1	FERRIS	AVE	1315	Overhead	Distribution	Luminaire	LUM HPS RWY 50W	Active	50	65485-54003	S-14	CITY OF E PROVIDENCE
0029	000	1	FERRIS	AVE	1315	Overhead	Distribution	Luminaire	LUM HPS RWY 50W	Active	50	65485-54003	S-14	CITY OF E PROVIDENCE
0031	000	1	FERRIS	AVE	1315	Overhead	Distribution	Luminaire	LUM HPS RWY 50W	Active	50	65485-54003	S-14	CITY OF E PROVIDENCE
0033	000	1	FERRIS	AVE	1315	Overhead	Distribution	Luminaire	LUM HPS RWY 50W	Active	50	65485-54003	S-14	CITY OF E PROVIDENCE
0035	000	1	FERRIS	AVE	1315	Overhead	Distribution	Luminaire	LUM HPS RWY 50W	Active	50	65485-54003	S-14	CITY OF E PROVIDENCE
0037	000	1	FERRIS	AVE	1315	Overhead	Distribution	Luminaire	LUM HPS RWY 50W	Active	50	65485-54003	S-14	CITY OF E PROVIDENCE
0038	050	1	FERRIS	AVE	1315	Overhead	Distribution	Luminaire	LUM HPS RWY 50W	Active	50	65485-54003	S-14	CITY OF E PROVIDENCE
0039	000	1	FERRIS	AVE	1315	Overhead	Distribution	Luminaire	LUM HPS RWY 50W	Active	50	65485-54003	S-14	CITY OF E PROVIDENCE
0040	000	1	FERRIS	AVE	1315	Overhead	Distribution	Luminaire	LUM HPS RWY 250W TT	Temp Turn Off	250	65485-54003	S-14	CITY OF E PROVIDENCE
0041	000	1	FERRIS	AVE	1315	Overhead	Distribution	Luminaire	LUM HPS RWY 50W	Active	50	65485-54003	S-14	CITY OF E PROVIDENCE
0043	000	1	FERRIS	AVE	1315	Overhead	Distribution	Luminaire	LUM HPS RWY 100W	Active	100	65485-54003	S-14	CITY OF E PROVIDENCE
0001	000	2	FIFTH	ST	1320	Overhead	Distribution	Luminaire	LUM HPS RWY 50W	Active	50	65485-54003	S-14	CITY OF E PROVIDENCE

Pole No	Pole Suffix	Light Sequ No	Street Name	Street Suffix	Ngrid Line No	Source Type	Pole Use	Component Type	Bill Print and Tariff Description	Billing Status	Lamp Wattage	Account No	Rate	Customer Name
0003	000	2	FIFTH	ST	1320	Overhead	Distribution	Luminaire	LUM HPS RWY 50W TT	Temp Turn Off	50	65485-54003	S-14	CITY OF E PROVIDENCE
0004	000	2	FIFTH	ST	1320	Overhead	Distribution	Luminaire	LUM HPS RWY 50W	Active	50	65485-54003	S-14	CITY OF E PROVIDENCE
0007	000	2	FIFTH	ST	1320	Overhead	Distribution	Luminaire	LUM HPS RWY 50W	Active	50	65485-54003	S-14	CITY OF E PROVIDENCE
0009	000	2	FIFTH	ST	1320	Overhead	Distribution	Luminaire	LUM HPS RWY 50W	Active	50	65485-54003	S-14	CITY OF E PROVIDENCE
0011	000	2	FIFTH	ST	1320	Overhead	Distribution	Luminaire	LUM HPS RWY 50W	Active	50	65485-54003	S-14	CITY OF E PROVIDENCE
0012	000	1	FIFTH	ST	1320	Overhead	Distribution	Luminaire	LUM HPS RWY 50W	Inactive	50	65485-54003	S-14	CITY OF E PROVIDENCE
0013	000	2	FIFTH	ST	1320	Overhead	Distribution	Luminaire	LUM HPS RWY 50W	Active	50	65485-54003	S-14	CITY OF E PROVIDENCE
0024	000	2	FIFTH	ST	1320	Overhead	Distribution	Luminaire	LUM HPS RWY 50W	Active	50	65485-54003	S-14	CITY OF E PROVIDENCE
0025	000	2	FIFTH	ST	1320	Overhead	Distribution	Luminaire	LUM HPS RWY 50W	Active	50	65485-54003	S-14	CITY OF E PROVIDENCE
0002	000	2	FIRGLADE	AVE	1325	Overhead	Distribution	Luminaire	LUM HPS RWY 50W	Active	50	65485-54003	S-14	CITY OF E PROVIDENCE
0004	000	2	FIRGLADE	AVE	1325	Overhead	Distribution	Luminaire	LUM HPS RWY 50W	Active	50	65485-54003	S-14	CITY OF E PROVIDENCE
0006	000	2	FIRGLADE	AVE	1325	Overhead	Distribution	Luminaire	LUM HPS RWY 50W TT	Temp Turn Off	50	65485-54003	S-14	CITY OF E PROVIDENCE
0007	000	2	FIRGLADE	AVE	1325	Overhead	Distribution	Luminaire	LUM HPS RWY 50W	Active	50	65485-54003	S-14	CITY OF E PROVIDENCE
0008	000	2	FIRGLADE	AVE	1325	Overhead	Distribution	Luminaire	LUM HPS RWY 50W TT	Temp Turn Off	50	65485-54003	S-14	CITY OF E PROVIDENCE
0009	000	2	FIRGLADE	AVE	1325	Overhead	Distribution	Luminaire	LUM HPS RWY 50W	Active	50	65485-54003	S-14	CITY OF E PROVIDENCE
0001	000	1	FIRST	ST	1330	Overhead	Distribution	Luminaire	LUM HPS RWY 50W	Active	50	65485-54003	S-14	CITY OF E PROVIDENCE
0002	000	2	FIRST	ST	1330	Overhead	Distribution	Luminaire	LUM HPS RWY 100W TT	Temp Turn Off	100	65485-54003	S-14	CITY OF E PROVIDENCE
0004	000	2	FIRST	ST	1330	Overhead	Distribution	Luminaire	LUM HPS RWY 50W	Active	50	65485-54003	S-14	CITY OF E PROVIDENCE
0007	000	1	FIRST	ST	1330	Overhead	Distribution	Luminaire	LUM HPS RWY 50W	Active	50	65485-54003	S-14	CITY OF E PROVIDENCE
0009	000	1	FIRST	ST	1330	Overhead	Distribution	Luminaire	LUM HPS RWY 50W	Active	50	65485-54003	S-14	CITY OF E PROVIDENCE
0012	000	2	FIRST	ST	1330	Overhead	Distribution	Luminaire	LUM HPS RWY 50W TT	Temp Turn Off	50	65485-54003	S-14	CITY OF E PROVIDENCE
0013	000	2	FIRST	ST	1330	Overhead	Distribution	Luminaire	LUM HPS RWY 50W	Active	50	65485-54003	S-14	CITY OF E PROVIDENCE
0015	000	2	FIRST	ST	1330	Overhead	Distribution	Luminaire	LUM HPS RWY 50W	Active	50	65485-54003	S-14	CITY OF E PROVIDENCE
0016	000	2	FIRST	ST	1330	Overhead	Distribution	Luminaire	LUM HPS RWY 50W TT	Temp Turn Off	50	90426-19008	S-14	CITY OF E PROVIDENCE
0017	000	2	FIRST	ST	1330	Overhead	Distribution	Luminaire	LUM HPS RWY 50W	Active	50	65485-54003	S-14	CITY OF E PROVIDENCE
0018	000	2	FIRST	ST	1330	Overhead	Distribution	Luminaire	LUM HPS RWY 50W TT	Temp Turn Off	50	65485-54003	S-14	CITY OF E PROVIDENCE
0019	000	2	FIRST	ST	1330	Overhead	Distribution	Luminaire	LUM HPS RWY 50W	Active	50	65485-54003	S-14	CITY OF E PROVIDENCE
0020	000	2	FIRST	ST	1330	Overhead	Distribution	Luminaire	LUM HPS RWY 50W TT	Temp Turn Off	50	65485-54003	S-14	CITY OF E PROVIDENCE
0021	000	2	FIRST	ST	1330	Overhead	Distribution	Luminaire	LUM HPS RWY 50W	Active	50	65485-54003	S-14	CITY OF E PROVIDENCE
0022	000	2	FIRST	ST	1330	Overhead	Distribution	Luminaire	LUM HPS RWY 50W TT	Temp Turn Off	50	65485-54003	S-14	CITY OF E PROVIDENCE
0024	000	2	FIRST	ST	1330	Overhead	Distribution	Luminaire	LUM HPS RWY 50W	Active	50	65485-54003	S-14	CITY OF E PROVIDENCE
0001	000	2	FISHER	ST	1335	Overhead	Distribution	Luminaire	LUM HPS RWY 50W	Active	50	65485-54003	S-14	CITY OF E PROVIDENCE
0002	000	2	FISHER	ST	1335	Overhead	Distribution	Luminaire	LUM HPS RWY 50W	Active	50	65485-54003	S-14	CITY OF E PROVIDENCE
0003	000	2	FISHER	ST	1335	Overhead	Distribution	Luminaire	LUM HPS RWY 50W	Active	50	90426-19008	S-14	CITY OF E PROVIDENCE
0004	000	1	FISHER	ST	1335	Overhead	Distribution	Luminaire	LUM HPS RWY 50W	Active	50	90426-19008	S-14	CITY OF E PROVIDENCE
0001	000	2	FLEMMING	ST	1345	Overhead	Distribution	Luminaire	LUM HPS RWY 50W	Active	50	65485-54003	S-14	CITY OF E PROVIDENCE
0002	000	1	FLEMMING	ST	1345	Overhead	Distribution	Luminaire	LUM HPS RWY 100W TT	Temp Turn Off	100	65485-54003	S-14	CITY OF E PROVIDENCE
0003	000	2	FLEMMING	ST	1345	Overhead	Distribution	Luminaire	LUM HPS RWY 50W	Active	50	65485-54003	S-14	CITY OF E PROVIDENCE
0002	000	2	FLETCHER	ST	1350	Overhead	Distribution	Luminaire	LUM HPS RWY 50W	Active	50	65485-54003	S-14	CITY OF E PROVIDENCE
0001	000	2	FLORENCE	ST	1355	Overhead	Distribution	Luminaire	LUM HPS RWY 50W	Active	50	65485-54003	S-14	CITY OF E PROVIDENCE
0003	000	2	FLORENCE	ST	1355	Overhead	Distribution	Luminaire	LUM HPS RWY 50W	Active	50	65485-54003	S-14	CITY OF E PROVIDENCE
0004	000	2	FLORENCE	ST	1355	Overhead	Distribution	Luminaire	LUM HPS RWY 50W	Active	50	65485-54003	S-14	CITY OF E PROVIDENCE
0002	000	2	FLOYD	AVE	1360	Overhead	Distribution	Luminaire	LUM HPS RWY 50W	Active	50	65485-54003	S-14	CITY OF E PROVIDENCE
0004	000	2	FLOYD	AVE	1360	Overhead	Distribution	Luminaire	LUM HPS RWY 50W	Active	50	65485-54003	S-14	CITY OF E PROVIDENCE
0005	000	2	FLOYD	AVE	1360	Overhead	Distribution	Luminaire	LUM HPS RWY 50W	Active	50	65485-54003	S-14	CITY OF E PROVIDENCE
0006	000	2	FLOYD	AVE	1360	Overhead	Distribution	Luminaire	LUM HPS RWY 50W	Active	50	65485-54003	S-14	CITY OF E PROVIDENCE
0001	000	1	FOLLETT	ST	1365	Overhead	Distribution	Luminaire	LUM HPS RWY 50W	Active	50	65485-54003	S-14	CITY OF E PROVIDENCE
0002	000	2	FOLLETT	ST	1365	Overhead	Distribution	Luminaire	LUM HPS RWY 100W TT	Temp Turn Off	100	65485-54003	S-14	CITY OF E PROVIDENCE
0003	000	1	FOLLETT	ST	1365	Overhead	Distribution	Luminaire	LUM HPS RWY 50W	Active	50	65485-54003	S-14	CITY OF E PROVIDENCE
0005	000	2	FOLLETT	ST	1365	Overhead	Distribution	Luminaire	LUM HPS RWY 50W	Active	50	65485-54003	S-14	CITY OF E PROVIDENCE
0007	000	2	FOLLETT	ST	1365	Overhead	Distribution	Luminaire	LUM HPS RWY 50W	Active	50	65485-54003	S-14	CITY OF E PROVIDENCE
0001	000	4	FORBES	ST	1370	Overhead	Distribution	Luminaire	LUM HPS FLD 400W	Active	400	90426-19008	S-14	CITY OF E PROVIDENCE
0002	000	1	FORBES	ST	1370	Overhead	Distribution	Luminaire	LUM HPS RWY 100W	Active	100	65485-54003	S-14	CITY OF E PROVIDENCE
0003	050	2	FORBES	ST	1370	Overhead	Distribution	Luminaire	LUM HPS RWY 250W	Active	250	65485-54003	S-14	CITY OF E PROVIDENCE
0004	050	1	FORBES	ST	1370	Overhead	Distribution	Luminaire	LUM HPS RWY 100W	Active	100	65485-54003	S-14	CITY OF E PROVIDENCE

Pole No	Pole Suffix	Light Sequ No	Street Name	Street Suffix	Ngrid Line No	Source Type	Pole Use	Component Type	Bill Print and Tariff Description	Billing Status	Lamp Wattage	Account No	Rate	Customer Name
0005	000	2	FORBES	ST	1370	Overhead	Distribution	Luminaire	LUM HPS RWY 250W	Active	250	65485-54003	S-14	CITY OF E PROVIDENCE
0006	050	1	FORBES	ST	1370	Overhead	Distribution	Luminaire	LUM HPS RWY 100W	Active	100	65485-54003	S-14	CITY OF E PROVIDENCE
0007	000	1	FORBES	ST	1370	Overhead	Distribution	Luminaire	LUM HPS RWY 100W	Active	100	65485-54003	S-14	CITY OF E PROVIDENCE
0008	050	2	FORBES	ST	1370	Overhead	Distribution	Luminaire	LUM HPS RWY 250W	Active	250	65485-54003	S-14	CITY OF E PROVIDENCE
0009	000	1	FORBES	ST	1370	Overhead	Distribution	Luminaire	LUM HPS RWY 100W	Active	100	65485-54003	S-14	CITY OF E PROVIDENCE
0012	000	1	FORBES	ST	1370	Overhead	Distribution	Luminaire	LUM HPS RWY 100W	Active	100	65485-54003	S-14	CITY OF E PROVIDENCE
0014	000	1	FORBES	ST	1370	Overhead	Distribution	Luminaire	LUM HPS RWY 100W	Active	100	65485-54003	S-14	CITY OF E PROVIDENCE
0016	000	1	FORBES	ST	1370	Overhead	Distribution	Luminaire	LUM HPS RWY 100W	Active	100	65485-54003	S-14	CITY OF E PROVIDENCE
0018	000	1	FORBES	ST	1370	Overhead	Distribution	Luminaire	LUM HPS RWY 100W	Active	100	65485-54003	S-14	CITY OF E PROVIDENCE
0020	000	1	FORBES	ST	1370	Overhead	Distribution	Luminaire	LUM HPS RWY 100W	Active	100	65485-54003	S-14	CITY OF E PROVIDENCE
0021	000	1	FORBES	ST	1370	Overhead	Distribution	Luminaire	LUM HPS RWY 100W	Active	100	65485-54003	S-14	CITY OF E PROVIDENCE
0022	000	1	FORBES	ST	1370	Overhead	Distribution	Luminaire	LUM HPS RWY 100W	Active	100	65485-54003	S-14	CITY OF E PROVIDENCE
0024	000	2	FORBES	ST	1370	Overhead	Distribution	Luminaire	LUM HPS RWY 250W	Active	250	65485-54003	S-14	CITY OF E PROVIDENCE
0025	000	2	FORBES	ST	1370	Overhead	Distribution	Luminaire	LUM HPS RWY 250W	Active	250	65485-54003	S-14	CITY OF E PROVIDENCE
0030	000	1	FORBES	ST	1370	Overhead	Distribution	Luminaire	LUM HPS RWY 100W	Active	100	65485-54003	S-14	CITY OF E PROVIDENCE
0032	000	1	FORBES	ST	1370	Overhead	Distribution	Luminaire	LUM HPS RWY 100W	Active	100	65485-54003	S-14	CITY OF E PROVIDENCE
0033	000	1	FORBES	ST	1370	Overhead	Distribution	Luminaire	LUM HPS RWY 100W	Active	100	65485-54003	S-14	CITY OF E PROVIDENCE
0035	000	1	FORBES	ST	1370	Overhead	Distribution	Luminaire	LUM HPS RWY 100W	Active	100	65485-54003	S-14	CITY OF E PROVIDENCE
0037	000	1	FORBES	ST	1370	Overhead	Distribution	Luminaire	LUM HPS RWY 100W	Active	100	65485-54003	S-14	CITY OF E PROVIDENCE
0038	050	2	FORBES	ST	1370	Overhead	Distribution	Luminaire	LUM HPS RWY 250W TT	Temp Turn Off	250	65485-54003	S-14	CITY OF E PROVIDENCE
0040	000	1	FORBES	ST	1370	Overhead	Distribution	Luminaire	LUM HPS RWY 100W	Active	100	65485-54003	S-14	CITY OF E PROVIDENCE
0042	000	1	FORBES	ST	1370	Overhead	Distribution	Luminaire	LUM HPS RWY 100W	Active	100	65485-54003	S-14	CITY OF E PROVIDENCE
0044	000	1	FORBES	ST	1370	Overhead	Distribution	Luminaire	LUM HPS RWY 100W	Active	100	65485-54003	S-14	CITY OF E PROVIDENCE
0046	000	1	FORBES	ST	1370	Overhead	Distribution	Luminaire	LUM HPS RWY 100W	Active	100	65485-54003	S-14	CITY OF E PROVIDENCE
0048	000	1	FORBES	ST	1370	Overhead	Distribution	Luminaire	LUM HPS RWY 100W	Active	100	65485-54003	S-14	CITY OF E PROVIDENCE
0050	000	1	FORBES	ST	1370	Overhead	Distribution	Luminaire	LUM HPS RWY 100W	Active	100	65485-54003	S-14	CITY OF E PROVIDENCE
0052	000	1	FORBES	ST	1370	Overhead	Distribution	Luminaire	LUM HPS RWY 100W	Active	100	65485-54003	S-14	CITY OF E PROVIDENCE
0054	000	1	FORBES	ST	1370	Overhead	Distribution	Luminaire	LUM HPS RWY 50W	Active	50	65485-54003	S-14	CITY OF E PROVIDENCE
0056	000	1	FORBES	ST	1370	Overhead	Distribution	Luminaire	LUM HPS RWY 100W	Active	100	65485-54003	S-14	CITY OF E PROVIDENCE
0059	000	1	FORBES	ST	1370	Overhead	Distribution	Luminaire	LUM HPS RWY 100W	Active	100	65485-54003	S-14	CITY OF E PROVIDENCE
0061	000	1	FORBES	ST	1370	Overhead	Distribution	Luminaire	LUM HPS RWY 100W	Active	100	65485-54003	S-14	CITY OF E PROVIDENCE
0063	000	1	FORBES	ST	1370	Overhead	Distribution	Luminaire	LUM HPS RWY 100W	Active	100	65485-54003	S-14	CITY OF E PROVIDENCE
0064	000	1	FORBES	ST	1370	Overhead	Distribution	Luminaire	LUM HPS RWY 100W	Active	100	65485-54003	S-14	CITY OF E PROVIDENCE
0002	000	2	FOREST	AVE	1380	Overhead	Distribution	Luminaire	LUM HPS RWY 50W	Active	50	65485-54003	S-14	CITY OF E PROVIDENCE
0004	000	2	FOREST	AVE	1380	Overhead	Distribution	Luminaire	LUM HPS RWY 50W	Active	50	65485-54003	S-14	CITY OF E PROVIDENCE
0005	000	2	FOREST	AVE	1380	Overhead	Distribution	Luminaire	LUM HPS RWY 50W TT	Temp Turn Off	50	65485-54003	S-14	CITY OF E PROVIDENCE
0001	000	2	FORT	ST	1385	Overhead	Distribution	Luminaire	LUM HPS RWY 50W TT	Temp Turn Off	50	65485-54003	S-14	CITY OF E PROVIDENCE
0003	000	2	FORT	ST	1385	Overhead	Distribution	Luminaire	LUM HPS RWY 50W TT	Temp Turn Off	50	65485-54003	S-14	CITY OF E PROVIDENCE
0005	000	2	FORT	ST	1385	Overhead	Distribution	Luminaire	LUM HPS RWY 50W	Active	50	65485-54003	S-14	CITY OF E PROVIDENCE
0006	000	2	FORT	ST	1385	Overhead	Distribution	Luminaire	LUM HPS RWY 50W TT	Temp Turn Off	50	65485-54003	S-14	CITY OF E PROVIDENCE
0007	000	1	FORT	ST	1385	Overhead	Distribution	Luminaire	LUM HPS RWY 50W	Active	50	65485-54003	S-14	CITY OF E PROVIDENCE
0008	000	1	FORT	ST	1385	Overhead	Distribution	Luminaire	LUM HPS RWY 50W	Active	50	65485-54003	S-14	CITY OF E PROVIDENCE
0009	000	1	FORT	ST	1385	Overhead	Distribution	Luminaire	LUM HPS RWY 50W	Active	50	65485-54003	S-14	CITY OF E PROVIDENCE
0010	000	1	FORT	ST	1385	Overhead	Distribution	Luminaire	LUM HPS RWY 50W	Active	50	65485-54003	S-14	CITY OF E PROVIDENCE
0011	000	1	FORT	ST	1385	Overhead	Distribution	Luminaire	LUM HPS RWY 50W	Active	50	65485-54003	S-14	CITY OF E PROVIDENCE
0012	000	2	FORT	ST	1385	Overhead	Distribution	Luminaire	LUM HPS RWY 50W	Active	50	65485-54003	S-14	CITY OF E PROVIDENCE
0014	000	2	FORT	ST	1385	Overhead	Distribution	Luminaire	LUM HPS RWY 50W TT	Temp Turn Off	50	65485-54003	S-14	CITY OF E PROVIDENCE
0015	000	2	FORT	ST	1385	Overhead	Distribution	Luminaire	LUM HPS RWY 50W	Active	50	65485-54003	S-14	CITY OF E PROVIDENCE
0016	000	2	FORT	ST	1385	Overhead	Distribution	Luminaire	LUM HPS RWY 50W TT	Temp Turn Off	50	65485-54003	S-14	CITY OF E PROVIDENCE
0017	000	1	FORT	ST	1385	Overhead	Distribution	Luminaire	LUM HPS RWY 50W	Active	50	65485-54003	S-14	CITY OF E PROVIDENCE
0018	000	2	FORT	ST	1385	Overhead	Distribution	Luminaire	LUM HPS RWY 50W TT	Temp Turn Off	50	65485-54003	S-14	CITY OF E PROVIDENCE
0020	000	2	FORT	ST	1385	Overhead	Distribution	Luminaire	LUM HPS RWY 50W	Active	50	65485-54003	S-14	CITY OF E PROVIDENCE
0022	000	2	FORT	ST	1385	Overhead	Distribution	Luminaire	LUM HPS RWY 50W	Active	50	65485-54003	S-14	CITY OF E PROVIDENCE
0024	000	2	FORT	ST	1385	Overhead	Distribution	Luminaire	LUM HPS RWY 50W	Active	50	65485-54003	S-14	CITY OF E PROVIDENCE
0026	000	2	FORT	ST	1385	Overhead	Distribution	Luminaire	LUM HPS RWY 50W	Active	50	65485-54003	S-14	CITY OF E PROVIDENCE

Pole No	Pole Suffix	Light Sequ No	Street Name	Street Suffix	Ngrid Line No	Source Type	Pole Use	Component Type	Bill Print and Tariff Description	Billing Status	Lamp Wattage	Account No	Rate	Customer Name
0027	000	2	FORT	ST	1385	Overhead	Distribution	Luminaire	LUM HPS RWY 50W TT	Temp Turn Off	50	90426-19008	S-14	CITY OF E PROVIDENCE
0028	000	2	FORT	ST	1385	Overhead	Distribution	Luminaire	LUM HPS RWY 50W	Active	50	65485-54003	S-14	CITY OF E PROVIDENCE
0029	000	2	FORT	ST	1385	Overhead	Distribution	Luminaire	LUM HPS RWY 50W	Active	50	90426-19008	S-14	CITY OF E PROVIDENCE
0030	000	2	FORT	ST	1385	Overhead	Distribution	Luminaire	LUM HPS RWY 50W TT	Temp Turn Off	50	65485-54003	S-14	CITY OF E PROVIDENCE
0031	000	2	FORT	ST	1385	Overhead	Distribution	Luminaire	LUM HPS RWY 50W	Active	50	90426-19008	S-14	CITY OF E PROVIDENCE
0032	000	2	FORT	ST	1385	Overhead	Distribution	Luminaire	LUM HPS RWY 50W TT	Temp Turn Off	50	90426-19008	S-14	CITY OF E PROVIDENCE
0033	000	2	FORT	ST	1385	Overhead	Distribution	Luminaire	LUM HPS RWY 50W	Active	50	65485-54003	S-14	CITY OF E PROVIDENCE
0035	000	2	FORT	ST	1385	Overhead	Distribution	Luminaire	LUM HPS RWY 50W	Active	50	65485-54003	S-14	CITY OF E PROVIDENCE
0036	000	2	FORT	ST	1385	Overhead	Distribution	Luminaire	LUM HPS RWY 50W TT	Temp Turn Off	50	65485-54003	S-14	CITY OF E PROVIDENCE
0001	000	1	FOURTH	ST	1390	Overhead	Distribution	Luminaire	LUM HPS RWY 50W	Active	50	65485-54003	S-14	CITY OF E PROVIDENCE
0002	000	2	FOURTH	ST	1390	Overhead	Distribution	Luminaire	LUM HPS RWY 50W	Active	50	65485-54003	S-14	CITY OF E PROVIDENCE
0004	000	2	FOURTH	ST	1390	Overhead	Distribution	Luminaire	LUM HPS RWY 50W	Active	50	65485-54003	S-14	CITY OF E PROVIDENCE
0007	000	2	FOURTH	ST	1390	Overhead	Distribution	Luminaire	LUM HPS RWY 50W	Active	50	65485-54003	S-14	CITY OF E PROVIDENCE
0009	000	2	FOURTH	ST	1390	Overhead	Distribution	Luminaire	LUM HPS RWY 50W	Active	50	65485-54003	S-14	CITY OF E PROVIDENCE
0002	000	2	FRANCIS	AVE	1395	Overhead	Distribution	Luminaire	LUM HPS RWY 50W	Active	50	65485-54003	S-14	CITY OF E PROVIDENCE
0004	000	2	FRANCIS	AVE	1395	Overhead	Distribution	Luminaire	LUM HPS RWY 50W	Active	50	65485-54003	S-14	CITY OF E PROVIDENCE
0007	000	2	FRANCIS	AVE	1395	Overhead	Distribution	Luminaire	LUM HPS RWY 50W	Active	50	65485-54003	S-14	CITY OF E PROVIDENCE
0001	000	2	FRANKLIN	ST	1400	Overhead	Distribution	Luminaire	LUM HPS RWY 100W TT	Temp Turn Off	100	65485-54003	S-14	CITY OF E PROVIDENCE
0002	000	2	FRANKLIN	ST	1400	Overhead	Distribution	Luminaire	LUM HPS RWY 50W	Active	50	65485-54003	S-14	CITY OF E PROVIDENCE
0004	000	2	FRANKLIN	ST	1400	Overhead	Distribution	Luminaire	LUM HPS RWY 50W	Active	50	65485-54003	S-14	CITY OF E PROVIDENCE
0005	000	2	FRANKLIN	ST	1400	Overhead	Distribution	Luminaire	LUM HPS RWY 50W	Active	50	65485-54003	S-14	CITY OF E PROVIDENCE
0006	000	2	FRASER	ST	1405	Overhead	Distribution	Luminaire	LUM HPS RWY 50W	Active	50	65485-54003	S-14	CITY OF E PROVIDENCE
0008	000	2	FRASER	ST	1405	Overhead	Distribution	Luminaire	LUM HPS RWY 50W	Active	50	65485-54003	S-14	CITY OF E PROVIDENCE
0010	000	2	FRASER	ST	1405	Overhead	Distribution	Luminaire	LUM HPS RWY 50W	Active	50	65485-54003	S-14	CITY OF E PROVIDENCE
0012	000	1	FRASER	ST	1405	Overhead	Distribution	Luminaire	LUM HPS RWY 50W	Active	50	65485-54003	S-14	CITY OF E PROVIDENCE
0001	000	2	FREDERICK	ST	1410	Overhead	Distribution	Luminaire	LUM HPS RWY 50W	Active	50	65485-54003	S-14	CITY OF E PROVIDENCE
0002	000	2	FREDERICK	ST	1410	Overhead	Distribution	Luminaire	LUM HPS RWY 50W	Active	50	65485-54003	S-14	CITY OF E PROVIDENCE
0004	000	2	FREDERICK	ST	1410	Overhead	Distribution	Luminaire	LUM HPS RWY 50W	Active	50	65485-54003	S-14	CITY OF E PROVIDENCE
0005	000	2	FREDERICK	ST	1410	Overhead	Distribution	Luminaire	LUM HPS RWY 50W	Active	50	65485-54003	S-14	CITY OF E PROVIDENCE
0007	000	2	FREDERICK	ST	1410	Overhead	Distribution	Luminaire	LUM HPS RWY 50W	Active	50	65485-54003	S-14	CITY OF E PROVIDENCE
0009	000	2	FREDERICK	ST	1410	Overhead	Distribution	Luminaire	LUM HPS RWY 50W	Active	50	65485-54003	S-14	CITY OF E PROVIDENCE
0012	000	2	FREDERICK	ST	1410	Overhead	Distribution	Luminaire	LUM HPS RWY 50W	Active	50	65485-54003	S-14	CITY OF E PROVIDENCE
0014	000	2	FREDERICK	ST	1410	Overhead	Distribution	Luminaire	LUM HPS RWY 50W	Active	50	65485-54003	S-14	CITY OF E PROVIDENCE
0006	000	1	FREEBORN	AVE	1415	Overhead	Distribution	Luminaire	LUM HPS RWY 50W	Active	50	65485-54003	S-14	CITY OF E PROVIDENCE
0007	000	2	FREEBORN	AVE	1415	Overhead	Distribution	Luminaire	LUM HPS RWY 50W TT	Temp Turn Off	50	65485-54003	S-14	CITY OF E PROVIDENCE
0008	000	2	FREEBORN	AVE	1415	Overhead	Distribution	Luminaire	LUM HPS RWY 100W	Active	100	65485-54003	S-14	CITY OF E PROVIDENCE
0013	000	2	FREEBORN	AVE	1415	Overhead	Distribution	Luminaire	LUM HPS RWY 50W	Active	50	65485-54003	S-14	CITY OF E PROVIDENCE
0014	000	2	FREEBORN	AVE	1415	Overhead	Distribution	Luminaire	LUM HPS RWY 50W	Active	50	65485-54003	S-14	CITY OF E PROVIDENCE
0017	000	2	FREEBORN	AVE	1415	Overhead	Distribution	Luminaire	LUM HPS RWY 50W	Active	50	65485-54003	S-14	CITY OF E PROVIDENCE
0019	000	2	FREEBORN	AVE	1415	Overhead	Distribution	Luminaire	LUM HPS RWY 50W	Active	50	65485-54003	S-14	CITY OF E PROVIDENCE
0021	000	2	FREEBORN	AVE	1415	Overhead	Distribution	Luminaire	LUM HPS RWY 50W	Active	50	65485-54003	S-14	CITY OF E PROVIDENCE
0023	000	2	FREEBORN	AVE	1415	Overhead	Distribution	Luminaire	LUM HPS RWY 50W	Active	50	65485-54003	S-14	CITY OF E PROVIDENCE
0025	000	2	FREEBORN	AVE	1415	Overhead	Distribution	Luminaire	LUM HPS RWY 50W	Active	50	65485-54003	S-14	CITY OF E PROVIDENCE
0027	000	2	FREEBORN	AVE	1415	Overhead	Distribution	Luminaire	LUM HPS RWY 50W	Active	50	65485-54003	S-14	CITY OF E PROVIDENCE
0001	000	2	FULLER	AVE	1420	Overhead	Distribution	Luminaire	LUM HPS RWY 50W	Active	50	65485-54003	S-14	CITY OF E PROVIDENCE
0002	000	2	FULLER	AVE	1420	Overhead	Distribution	Luminaire	LUM HPS RWY 50W TT	Temp Turn Off	50	65485-54003	S-14	CITY OF E PROVIDENCE
0003	000	2	FULLER	AVE	1420	Overhead	Distribution	Luminaire	LUM HPS RWY 50W	Active	50	65485-54003	S-14	CITY OF E PROVIDENCE
0008	000	2	GARDEN	DR	1430	Overhead	Distribution	Luminaire	LUM HPS RWY 50W	Active	50	65485-54003	S-14	CITY OF E PROVIDENCE
0010	000	2	GARDEN	DR	1430	Overhead	Distribution	Luminaire	LUM HPS RWY 50W	Active	50	65485-54003	S-14	CITY OF E PROVIDENCE
0012	000	2	GARDEN	DR	1430	Overhead	Distribution	Luminaire	LUM HPS RWY 50W	Active	50	65485-54003	S-14	CITY OF E PROVIDENCE
0013	000	2	GARDEN	DR	1430	Overhead	Distribution	Luminaire	LUM HPS RWY 50W	Active	50	65485-54003	S-14	CITY OF E PROVIDENCE
0015	000	2	GARDEN	DR	1430	Overhead	Distribution	Luminaire	LUM HPS RWY 50W	Active	50	65485-54003	S-14	CITY OF E PROVIDENCE
0016	000	2	GARDEN	DR	1430	Overhead	Distribution	Luminaire	LUM HPS RWY 50W	Active	50	65485-54003	S-14	CITY OF E PROVIDENCE
0002	000	2	GARDINER	AVE	1435	Overhead	Distribution	Luminaire	LUM HPS RWY 50W	Active	50	65485-54003	S-14	CITY OF E PROVIDENCE
0003	000	1	GARDINER	AVE	1435	Overhead	Distribution	Luminaire	LUM HPS RWY 50W	Inactive	50	90426-19008	S-14	CITY OF E PROVIDENCE

Pole No	Pole Suffix	Light Sequ No	Street Name	Street Suffix	Ngrid Line No	Source Type	Pole Use	Component Type	Bill Print and Tariff Description	Billing Status	Lamp Wattage	Account No	Rate	Customer Name
0004	000	2	GARDINER	AVE	1435	Overhead	Distribution	Luminaire	LUM HPS RWY 50W	Active	50	65485-54003	S-14	CITY OF E PROVIDENCE
0006	000	2	GARDINER	AVE	1435	Overhead	Distribution	Luminaire	LUM HPS RWY 50W	Active	50	90426-19008	S-14	CITY OF E PROVIDENCE
0007	000	2	GARDINER	AVE	1435	Overhead	Distribution	Luminaire	LUM HPS RWY 50W	Active	50	90426-19008	S-14	CITY OF E PROVIDENCE
0009	000	2	GARDINER	AVE	1435	Overhead	Distribution	Luminaire	LUM HPS RWY 50W	Active	50	90426-19008	S-14	CITY OF E PROVIDENCE
0011	000	2	GARDINER	AVE	1435	Overhead	Distribution	Luminaire	LUM HPS RWY 50W	Active	50	90426-19008	S-14	CITY OF E PROVIDENCE
0001	000	2	GARFIELD	AVE	1440	Overhead	Distribution	Luminaire	LUM HPS RWY 50W TT	Temp Turn Off	50	65485-54003	S-14	CITY OF E PROVIDENCE
0002	000	2	GARFIELD	AVE	1440	Overhead	Distribution	Luminaire	LUM HPS RWY 50W	Active	50	65485-54003	S-14	CITY OF E PROVIDENCE
0004	000	2	GARFIELD	AVE	1440	Overhead	Distribution	Luminaire	LUM HPS RWY 50W	Active	50	65485-54003	S-14	CITY OF E PROVIDENCE
0005	000	2	GARFIELD	AVE	1440	Overhead	Distribution	Luminaire	LUM HPS RWY 50W	Active	50	65485-54003	S-14	CITY OF E PROVIDENCE
0001	000	0	GEMINI	DR	3030	Underground	Street Lighting	Pole	POLE METAL W/BASE	Active	0	65485-54003	S-14	CITY OF E PROVIDENCE
0001	000	2	GEMINI	DR	3030	Underground	Street Lighting	Luminaire	LUM HPS RWY 100W	Active	100	65485-54003	S-14	CITY OF E PROVIDENCE
0002	000	0	GEMINI	DR	3030	Underground	Street Lighting	Pole	POLE METAL W/BASE	Inactive	0	65485-54003	S-14	CITY OF E PROVIDENCE
0002	000	2	GEMINI	DR	3030	Underground	Street Lighting	Luminaire	LUM HPS RWY 100W	Red Cap Perm	100	65485-54003	S-14	CITY OF E PROVIDENCE
0003	000	0	GEMINI	DR	3030	Underground	Street Lighting	Pole	POLE METAL W/BASE	Active	0	65485-54003	S-14	CITY OF E PROVIDENCE
0003	000	2	GEMINI	DR	3030	Underground	Street Lighting	Luminaire	LUM HPS RWY 100W	Active	100	65485-54003	S-14	CITY OF E PROVIDENCE
0004	000	0	GEMINI	DR	3030	Underground	Street Lighting	Pole	POLE METAL W/BASE	Inactive	0	65485-54003	S-14	CITY OF E PROVIDENCE
0004	000	2	GEMINI	DR	3030	Underground	Street Lighting	Luminaire	LUM HPS RWY 100W	Red Cap Perm	100	65485-54003	S-14	CITY OF E PROVIDENCE
0005	000	0	GEMINI	DR	3030	Underground	Street Lighting	Pole	POLE METAL W/BASE	Active	0	65485-54003	S-14	CITY OF E PROVIDENCE
0005	000	2	GEMINI	DR	3030	Underground	Street Lighting	Luminaire	LUM HPS RWY 100W	Active	100	65485-54003	S-14	CITY OF E PROVIDENCE
0001	000	2	GEORGE	ST	1445	Overhead	Distribution	Luminaire	LUM HPS RWY 50W	Active	50	65485-54003	S-14	CITY OF E PROVIDENCE
0003	000	2	GEORGE	ST	1445	Overhead	Distribution	Luminaire	LUM HPS RWY 50W	Active	50	65485-54003	S-14	CITY OF E PROVIDENCE
0004	000	2	GEORGE	ST	1445	Overhead	Distribution	Luminaire	LUM HPS RWY 50W TT	Temp Turn Off	50	65485-54003	S-14	CITY OF E PROVIDENCE
0002	000	2	GERALD	ST	1450	Overhead	Distribution	Luminaire	LUM HPS RWY 50W	Active	50	65485-54003	S-14	CITY OF E PROVIDENCE
0003	000	2	GERALD	ST	1450	Overhead	Distribution	Luminaire	LUM HPS RWY 50W TT	Temp Turn Off	50	65485-54003	S-14	CITY OF E PROVIDENCE
0004	000	2	GERALD	ST	1450	Overhead	Distribution	Luminaire	LUM HPS RWY 50W	Active	50	65485-54003	S-14	CITY OF E PROVIDENCE
0007	050	2	GERALD	ST	1450	Overhead	Distribution	Luminaire	LUM HPS RWY 50W TT	Temp Turn Off	50	65485-54003	S-14	CITY OF E PROVIDENCE
0009	000	2	GERALD	ST	1450	Overhead	Distribution	Luminaire	LUM HPS RWY 50W	Active	50	65485-54003	S-14	CITY OF E PROVIDENCE
0002	000	2	GERTRUDE	AVE	1455	Overhead	Distribution	Luminaire	LUM HPS RWY 50W	Active	50	65485-54003	S-14	CITY OF E PROVIDENCE
0003	000	2	GERTRUDE	AVE	1455	Overhead	Distribution	Luminaire	LUM HPS RWY 50W TT	Temp Turn Off	50	65485-54003	S-14	CITY OF E PROVIDENCE
0001	000	2	GIBBS	ST	1460	Overhead	Distribution	Luminaire	LUM HPS RWY 50W	Active	50	90426-19008	S-14	CITY OF E PROVIDENCE
0001	000	2	GILL	ST	1465	Overhead	Distribution	Luminaire	LUM HPS RWY 50W	Active	50	65485-54003	S-14	CITY OF E PROVIDENCE
0003	000	2	GLEN	ST	1475	Overhead	Distribution	Luminaire	LUM HPS RWY 50W	Active	50	65485-54003	S-14	CITY OF E PROVIDENCE
0004	000	2	GLEN	ST	1475	Overhead	Distribution	Luminaire	LUM HPS RWY 50W	Active	50	65485-54003	S-14	CITY OF E PROVIDENCE
0002	000	2	GLENDALE	AVE	1480	Overhead	Distribution	Luminaire	LUM HPS RWY 50W	Active	50	65485-54003	S-14	CITY OF E PROVIDENCE
0002	000	2	GLENROSE	DR	1485	Overhead	Distribution	Luminaire	LUM HPS RWY 50W	Active	50	65485-54003	S-14	CITY OF E PROVIDENCE
0004	000	2	GLENROSE	DR	1485	Overhead	Distribution	Luminaire	LUM HPS RWY 50W	Active	50	65485-54003	S-14	CITY OF E PROVIDENCE
0007	000	2	GLENROSE	DR	1485	Overhead	Distribution	Luminaire	LUM HPS RWY 50W	Active	50	65485-54003	S-14	CITY OF E PROVIDENCE
0009	000	2	GLENROSE	DR	1485	Overhead	Distribution	Luminaire	LUM HPS RWY 50W	Active	50	65485-54003	S-14	CITY OF E PROVIDENCE
0011	000	2	GLENROSE	DR	1485	Overhead	Distribution	Luminaire	LUM HPS RWY 50W	Active	50	65485-54003	S-14	CITY OF E PROVIDENCE
0013	000	2	GLENROSE	DR	1485	Overhead	Distribution	Luminaire	LUM HPS RWY 50W	Active	50	65485-54003	S-14	CITY OF E PROVIDENCE
0015	000	2	GLENROSE	DR	1485	Overhead	Distribution	Luminaire	LUM HPS RWY 50W	Active	50	65485-54003	S-14	CITY OF E PROVIDENCE
0016	000	2	GLENROSE	DR	1485	Overhead	Distribution	Luminaire	LUM HPS RWY 50W	Active	50	65485-54003	S-14	CITY OF E PROVIDENCE
0018	000	2	GLENROSE	DR	1485	Overhead	Distribution	Luminaire	LUM HPS RWY 50W	Active	50	65485-54003	S-14	CITY OF E PROVIDENCE
0019	000	2	GLENROSE	DR	1485	Overhead	Distribution	Luminaire	LUM HPS RWY 50W	Active	50	65485-54003	S-14	CITY OF E PROVIDENCE
0002	000	2	GLENWOOD	AVE	1490	Overhead	Distribution	Luminaire	LUM HPS RWY 50W	Active	50	65485-54003	S-14	CITY OF E PROVIDENCE
0003	000	2	GLENWOOD	AVE	1490	Overhead	Distribution	Luminaire	LUM HPS RWY 50W TT	Temp Turn Off	50	65485-54003	S-14	CITY OF E PROVIDENCE
0004	000	2	GLENWOOD	AVE	1490	Overhead	Distribution	Luminaire	LUM HPS RWY 50W	Active	50	65485-54003	S-14	CITY OF E PROVIDENCE
0001	000	2	GOFF	ST	1495	Overhead	Distribution	Luminaire	LUM HPS RWY 50W	Active	50	65485-54003	S-14	CITY OF E PROVIDENCE
0004	000	2	GOFF	ST	1495	Overhead	Distribution	Luminaire	LUM HPS RWY 50W	Active	50	65485-54003	S-14	CITY OF E PROVIDENCE
0002	000	2	GOLDSMITH	AVE	1500	Overhead	Distribution	Luminaire	LUM HPS RWY 50W	Active	50	65485-54003	S-14	CITY OF E PROVIDENCE
0004	000	2	GOLDSMITH	AVE	1500	Overhead	Distribution	Luminaire	LUM HPS RWY 50W	Active	50	65485-54003	S-14	CITY OF E PROVIDENCE
0006	000	2	GOLDSMITH	AVE	1500	Overhead	Distribution	Luminaire	LUM HPS RWY 50W	Active	50	65485-54003	S-14	CITY OF E PROVIDENCE
0008	000	2	GOLDSMITH	AVE	1500	Overhead	Distribution	Luminaire	LUM HPS RWY 50W	Active	50	65485-54003	S-14	CITY OF E PROVIDENCE
0009	000	2	GOLDSMITH	AVE	1500	Overhead	Distribution	Luminaire	LUM HPS RWY 50W	Active	50	65485-54003	S-14	CITY OF E PROVIDENCE
0010	000	1	GOLDSMITH	AVE	1500	Overhead	Distribution	Luminaire	LUM HPS RWY 50W TT	Temp Turn Off	50	65485-54003	S-14	CITY OF E PROVIDENCE

Pole No	Pole Suffix	Light Sequ No	Street Name	Street Suffix	Ngrid Line No	Source Type	Pole Use	Component Type	Bill Print and Tariff Description	Billing Status	Lamp Wattage	Account No	Rate	Customer Name
0012	000	2	GOLDSMITH	AVE	1500	Overhead	Distribution	Luminaire	LUM HPS RWY 50W	Active	50	65485-54003	S-14	CITY OF E PROVIDENCE
0006	000	2	GOLF	AVE	1505	Overhead	Distribution	Luminaire	LUM HPS RWY 50W	Active	50	65485-54003	S-14	CITY OF E PROVIDENCE
0002	000	1	GOODALL	PL	1510	Overhead	Distribution	Luminaire	LUM HPS RWY 100W	Active	100	65485-54003	S-14	CITY OF E PROVIDENCE
0001	000	2	GRANT	AVE	1525	Overhead	Distribution	Luminaire	LUM HPS RWY 50W	Active	50	65485-54003	S-14	CITY OF E PROVIDENCE
0003	000	2	GRANT	AVE	1525	Overhead	Distribution	Luminaire	LUM HPS RWY 50W TT	Temp Turn Off	50	65485-54003	S-14	CITY OF E PROVIDENCE
0002	000	2	GRAPE	ST	1530	Overhead	Distribution	Luminaire	LUM HPS RWY 50W	Active	50	65485-54003	S-14	CITY OF E PROVIDENCE
0001	000	2	GRASSMERE	AVE	1535	Overhead	Distribution	Luminaire	LUM HPS RWY 50W	Active	50	65485-54003	S-14	CITY OF E PROVIDENCE
0002	000	2	GRASSMERE	AVE	1535	Overhead	Distribution	Luminaire	LUM HPS RWY 50W	Active	50	65485-54003	S-14	CITY OF E PROVIDENCE
0003	000	2	GRASSMERE	AVE	1535	Overhead	Distribution	Luminaire	LUM HPS RWY 50W TT	Temp Turn Off	50	65485-54003	S-14	CITY OF E PROVIDENCE
0004	000	2	GRASSMERE	AVE	1535	Overhead	Distribution	Luminaire	LUM HPS RWY 50W	Active	50	65485-54003	S-14	CITY OF E PROVIDENCE
0005	000	2	GRASSMERE	AVE	1535	Overhead	Distribution	Luminaire	LUM HPS RWY 50W TT	Temp Turn Off	50	65485-54003	S-14	CITY OF E PROVIDENCE
0006	000	2	GRASSMERE	AVE	1535	Overhead	Distribution	Luminaire	LUM HPS RWY 50W	Active	50	65485-54003	S-14	CITY OF E PROVIDENCE
0007	000	2	GRASSMERE	AVE	1535	Overhead	Distribution	Luminaire	LUM HPS RWY 50W TT	Temp Turn Off	50	65485-54003	S-14	CITY OF E PROVIDENCE
0008	000	2	GRASSMERE	AVE	1535	Overhead	Distribution	Luminaire	LUM HPS RWY 50W	Active	50	65485-54003	S-14	CITY OF E PROVIDENCE
0009	000	2	GRASSMERE	AVE	1535	Overhead	Distribution	Luminaire	LUM HPS RWY 50W	Active	50	65485-54003	S-14	CITY OF E PROVIDENCE
0012	000	1	GRASSMERE	AVE	1535	Overhead	Distribution	Luminaire	LUM HPS RWY 50W	Inactive	50	65485-54003	S-14	CITY OF E PROVIDENCE
0015	000	2	GRASSMERE	AVE	1535	Overhead	Distribution	Luminaire	LUM HPS RWY 50W	Active	50	65485-54003	S-14	CITY OF E PROVIDENCE
0017	000	2	GRASSMERE	AVE	1535	Overhead	Distribution	Luminaire	LUM HPS RWY 50W	Active	50	65485-54003	S-14	CITY OF E PROVIDENCE
0005	000	2	GRASSY PLAIN	RD	1540	Overhead	Distribution	Luminaire	LUM HPS RWY 50W	Active	50	65485-54003	S-14	CITY OF E PROVIDENCE
0007	000	2	GRASSY PLAIN	RD	1540	Overhead	Distribution	Luminaire	LUM HPS RWY 50W	Active	50	65485-54003	S-14	CITY OF E PROVIDENCE
0008	000	2	GRASSY PLAIN	RD	1540	Overhead	Distribution	Luminaire	LUM HPS RWY 50W	Active	50	65485-54003	S-14	CITY OF E PROVIDENCE
0010	000	2	GRASSY PLAIN	RD	1540	Overhead	Distribution	Luminaire	LUM HPS RWY 50W TT	Temp Turn Off	50	65485-54003	S-14	CITY OF E PROVIDENCE
0011	000	2	GRASSY PLAIN	RD	1540	Overhead	Distribution	Luminaire	LUM HPS RWY 50W	Active	50	65485-54003	S-14	CITY OF E PROVIDENCE
0012	000	2	GRASSY PLAIN	RD	1540	Overhead	Distribution	Luminaire	LUM HPS RWY 50W	Active	50	65485-54003	S-14	CITY OF E PROVIDENCE
0014	000	2	GRASSY PLAIN	RD	1540	Overhead	Distribution	Luminaire	LUM HPS RWY 50W TT	Temp Turn Off	50	65485-54003	S-14	CITY OF E PROVIDENCE
0014	050	2	GRASSY PLAIN	RD	1540	Overhead	Distribution	Luminaire	LUM HPS RWY 50W	Active	50	65485-54003	S-14	CITY OF E PROVIDENCE
0015	000	2	GRASSY PLAIN	RD	1540	Overhead	Distribution	Luminaire	LUM HPS RWY 50W	Active	50	65485-54003	S-14	CITY OF E PROVIDENCE
0016	000	2	GRASSY PLAIN	RD	1540	Overhead	Distribution	Luminaire	LUM HPS RWY 50W	Active	50	65485-54003	S-14	CITY OF E PROVIDENCE
0001	000	2	GREEN LANE	RD	1550	Overhead	Distribution	Luminaire	LUM HPS RWY 50W	Active	50	65485-54003	S-14	CITY OF E PROVIDENCE
0003	000	2	GREEN LANE	RD	1550	Overhead	Distribution	Luminaire	LUM HPS RWY 50W	Active	50	65485-54003	S-14	CITY OF E PROVIDENCE
0005	000	2	GREEN LANE	RD	1550	Overhead	Distribution	Luminaire	LUM HPS RWY 50W	Active	50	65485-54003	S-14	CITY OF E PROVIDENCE
0006	000	2	GREEN LANE	RD	1550	Overhead	Distribution	Luminaire	LUM HPS RWY 50W TT	Temp Turn Off	50	90426-19008	S-14	CITY OF E PROVIDENCE
0007	000	2	GREEN LANE	RD	1550	Overhead	Distribution	Luminaire	LUM HPS RWY 50W	Active	50	65485-54003	S-14	CITY OF E PROVIDENCE
0009	000	2	GREEN LANE	RD	1550	Overhead	Distribution	Luminaire	LUM HPS RWY 50W	Active	50	65485-54003	S-14	CITY OF E PROVIDENCE
0011	000	2	GREEN LANE	RD	1550	Overhead	Distribution	Luminaire	LUM HPS RWY 50W	Active	50	65485-54003	S-14	CITY OF E PROVIDENCE
0001	001	2	GREENE	ST	1545	Overhead	Distribution	Luminaire	LUM HPS RWY 50W	Active	50	65485-54003	S-14	CITY OF E PROVIDENCE
0003	001	1	GREENE	ST	1545	Overhead	Distribution	Luminaire	LUM HPS RWY 50W	Active	50	65485-54003	S-14	CITY OF E PROVIDENCE
0001	001	2	GREENWICH	AVE	1555	Overhead	Distribution	Luminaire	LUM HPS RWY 50W	Active	50	65485-54003	S-14	CITY OF E PROVIDENCE
0003	000	2	GREENWICH	AVE	1555	Overhead	Distribution	Luminaire	LUM HPS RWY 50W	Active	50	65485-54003	S-14	CITY OF E PROVIDENCE
0004	000	2	GREENWICH	AVE	1555	Overhead	Distribution	Luminaire	LUM HPS RWY 50W TT	Temp Turn Off	50	65485-54003	S-14	CITY OF E PROVIDENCE
0005	000	2	GREENWICH	AVE	1555	Overhead	Distribution	Luminaire	LUM HPS RWY 50W	Active	50	65485-54003	S-14	CITY OF E PROVIDENCE
0005	002	3	GREENWICH	AVE	1555	Overhead	Distribution	Luminaire	LUM HPS FLD 400W	Active	400	28108-12001	S-10	CITY OF E PROVIDENCE
0006	000	1	GREENWICH	AVE	1555	Overhead	Distribution	Luminaire	LUM HPS FLD 400W	Inactive	400	90426-19008	S-14	CITY OF E PROVIDENCE
0007	000	2	GREENWICH	AVE	1555	Overhead	Distribution	Luminaire	LUM HPS RWY 50W	Active	50	65485-54003	S-14	CITY OF E PROVIDENCE
0009	000	2	GREENWICH	AVE	1555	Overhead	Distribution	Luminaire	LUM HPS RWY 50W	Active	50	65485-54003	S-14	CITY OF E PROVIDENCE
0010	000	2	GREENWICH	AVE	1555	Overhead	Distribution	Luminaire	LUM HPS RWY 50W TT	Temp Turn Off	50	65485-54003	S-14	CITY OF E PROVIDENCE
0011	000	2	GREENWICH	AVE	1555	Overhead	Distribution	Luminaire	LUM HPS RWY 50W	Active	50	65485-54003	S-14	CITY OF E PROVIDENCE
0012	000	2	GREENWICH	AVE	1555	Overhead	Distribution	Luminaire	LUM HPS RWY 50W TT	Temp Turn Off	50	65485-54003	S-14	CITY OF E PROVIDENCE
0013	000	2	GREENWICH	AVE	1555	Overhead	Distribution	Luminaire	LUM HPS RWY 50W	Active	50	65485-54003	S-14	CITY OF E PROVIDENCE
0014	000	2	GREENWICH	AVE	1555	Overhead	Distribution	Luminaire	LUM HPS RWY 50W TT	Temp Turn Off	50	65485-54003	S-14	CITY OF E PROVIDENCE
0001	000	1	GREENWOOD	AVE	1560	Overhead	Distribution	Luminaire	LUM HPS RWY 50W	Active	50	65485-54003	S-14	CITY OF E PROVIDENCE
0003	000	2	GREENWOOD	AVE	1560	Overhead	Distribution	Luminaire	LUM HPS RWY 50W	Active	50	65485-54003	S-14	CITY OF E PROVIDENCE
0005	000	2	GREENWOOD	AVE	1560	Overhead	Distribution	Luminaire	LUM HPS RWY 50W	Active	50	65485-54003	S-14	CITY OF E PROVIDENCE
0007	000	2	GREENWOOD	AVE	1560	Overhead	Distribution	Luminaire	LUM HPS RWY 50W	Active	50	65485-54003	S-14	CITY OF E PROVIDENCE
0009	000	2	GREENWOOD	AVE	1560	Overhead	Distribution	Luminaire	LUM HPS RWY 50W	Active	50	65485-54003	S-14	CITY OF E PROVIDENCE

Pole No	Pole Suffix	Light Sequ No	Street Name	Street Suffix	Ngrid Line No	Source Type	Pole Use	Component Type	Bill Print and Tariff Description	Billing Status	Lamp Wattage	Account No	Rate	Customer Name
0011	000	2	GREENWOOD	AVE	1560	Overhead	Distribution	Luminaire	LUM HPS RWY 50W	Active	50	65485-54003	S-14	CITY OF E PROVIDENCE
0013	000	2	GREENWOOD	AVE	1560	Overhead	Distribution	Luminaire	LUM HPS RWY 50W	Active	50	65485-54003	S-14	CITY OF E PROVIDENCE
0016	000	2	GREENWOOD	AVE	1560	Overhead	Distribution	Luminaire	LUM HPS RWY 50W	Active	50	65485-54003	S-14	CITY OF E PROVIDENCE
0018	000	2	GREENWOOD	AVE	1560	Overhead	Distribution	Luminaire	LUM HPS RWY 50W	Active	50	65485-54003	S-14	CITY OF E PROVIDENCE
0021	000	2	GREENWOOD	AVE	1560	Overhead	Distribution	Luminaire	LUM HPS RWY 100W TT	Temp Turn Off	100	65485-54003	S-14	CITY OF E PROVIDENCE
0029	000	2	GREENWOOD	AVE	1560	Overhead	Distribution	Luminaire	LUM HPS RWY 50W	Active	50	65485-54003	S-14	CITY OF E PROVIDENCE
0031	000	2	GREENWOOD	AVE	1560	Overhead	Distribution	Luminaire	LUM HPS RWY 50W	Active	50	65485-54003	S-14	CITY OF E PROVIDENCE
0034	000	2	GREENWOOD	AVE	1560	Overhead	Distribution	Luminaire	LUM HPS RWY 50W	Active	50	65485-54003	S-14	CITY OF E PROVIDENCE
0036	000	2	GREENWOOD	AVE	1560	Overhead	Distribution	Luminaire	LUM HPS RWY 50W TT	Temp Turn Off	50	65485-54003	S-14	CITY OF E PROVIDENCE
0038	000	2	GREENWOOD	AVE	1560	Overhead	Distribution	Luminaire	LUM HPS RWY 50W	Active	50	65485-54003	S-14	CITY OF E PROVIDENCE
0039	000	2	GREENWOOD	AVE	1560	Overhead	Distribution	Luminaire	LUM HPS RWY 50W	Active	50	65485-54003	S-14	CITY OF E PROVIDENCE
0041	000	2	GREENWOOD	AVE	1560	Overhead	Distribution	Luminaire	LUM HPS RWY 50W	Active	50	65485-54003	S-14	CITY OF E PROVIDENCE
9020	000	1	GREENWOOD	AVE	1560	Overhead	Distribution	Luminaire	LUM HPS RWY 50W	Active	50	65485-54003	S-14	CITY OF E PROVIDENCE
9022	000	1	GREENWOOD	AVE	1560	Overhead	Distribution	Luminaire	LUM HPS RWY 50W	Active	50	65485-54003	S-14	CITY OF E PROVIDENCE
9024	000	2	GREENWOOD	AVE	1560	Overhead	Distribution	Luminaire	LUM HPS RWY 100W TT	Temp Turn Off	100	65485-54003	S-14	CITY OF E PROVIDENCE
9025	000	2	GREENWOOD	AVE	1560	Overhead	Distribution	Luminaire	LUM HPS RWY 100W TT	Temp Turn Off	100	65485-54003	S-14	CITY OF E PROVIDENCE
9026	000	1	GREENWOOD	AVE	1560	Overhead	Distribution	Luminaire	LUM HPS RWY 50W	Active	50	65485-54003	S-14	CITY OF E PROVIDENCE
0001	000	2	GRIFFITH	DR	1565	Overhead	Distribution	Luminaire	LUM HPS RWY 50W TT	Temp Turn Off	50	90426-19008	S-14	CITY OF E PROVIDENCE
0002	000	2	GRIFFITH	DR	1565	Overhead	Distribution	Luminaire	LUM HPS RWY 50W	Active	50	65485-54003	S-14	CITY OF E PROVIDENCE
0003	000	2	GRIFFITH	DR	1565	Overhead	Distribution	Luminaire	LUM HPS RWY 50W TT	Temp Turn Off	50	65485-54003	S-14	CITY OF E PROVIDENCE
0004	000	2	GRIFFITH	DR	1565	Overhead	Distribution	Luminaire	LUM HPS RWY 50W	Active	50	65485-54003	S-14	CITY OF E PROVIDENCE
0005	000	2	GRIFFITH	DR	1565	Overhead	Distribution	Luminaire	LUM HPS RWY 50W TT	Temp Turn Off	50	90426-19008	S-14	CITY OF E PROVIDENCE
0006	000	2	GRIFFITH	DR	1565	Overhead	Distribution	Luminaire	LUM HPS RWY 50W	Active	50	65485-54003	S-14	CITY OF E PROVIDENCE
0007	000	2	GRIFFITH	DR	1565	Overhead	Distribution	Luminaire	LUM HPS RWY 50W	Active	50	90426-19008	S-14	CITY OF E PROVIDENCE
0008	000	2	GRIFFITH	DR	1565	Overhead	Distribution	Luminaire	LUM HPS RWY 50W	Active	50	65485-54003	S-14	CITY OF E PROVIDENCE
0010	000	2	GRIFFITH	DR	1565	Overhead	Distribution	Luminaire	LUM HPS RWY 50W	Active	50	65485-54003	S-14	CITY OF E PROVIDENCE
0001	000	1	GROSVENOR	AVE	1570	Overhead	Distribution	Luminaire	LUM HPS RWY 50W	Active	50	65485-54003	S-14	CITY OF E PROVIDENCE
0003	000	2	GROSVENOR	AVE	1570	Overhead	Distribution	Luminaire	LUM HPS RWY 50W TT	Temp Turn Off	50	65485-54003	S-14	CITY OF E PROVIDENCE
0004	000	1	GROSVENOR	AVE	1570	Overhead	Distribution	Luminaire	LUM HPS RWY 50W	Active	50	65485-54003	S-14	CITY OF E PROVIDENCE
0005	000	2	GROSVENOR	AVE	1570	Overhead	Distribution	Luminaire	LUM HPS RWY 100W TT	Temp Turn Off	100	65485-54003	S-14	CITY OF E PROVIDENCE
0006	000	1	GROSVENOR	AVE	1570	Overhead	Distribution	Luminaire	LUM HPS RWY 50W	Active	50	65485-54003	S-14	CITY OF E PROVIDENCE
0007	000	2	GROSVENOR	AVE	1570	Overhead	Distribution	Luminaire	LUM HPS RWY 100W TT	Temp Turn Off	100	65485-54003	S-14	CITY OF E PROVIDENCE
0008	000	1	GROSVENOR	AVE	1570	Overhead	Distribution	Luminaire	LUM HPS RWY 50W	Active	50	65485-54003	S-14	CITY OF E PROVIDENCE
0009	000	2	GROSVENOR	AVE	1570	Overhead	Distribution	Luminaire	LUM HPS RWY 100W TT	Temp Turn Off	100	65485-54003	S-14	CITY OF E PROVIDENCE
0010	000	1	GROSVENOR	AVE	1570	Overhead	Distribution	Luminaire	LUM HPS RWY 50W	Active	50	65485-54003	S-14	CITY OF E PROVIDENCE
0011	000	1	GROSVENOR	AVE	1570	Overhead	Distribution	Luminaire	LUM HPS RWY 100W TT	Temp Turn Off	100	65485-54003	S-14	CITY OF E PROVIDENCE
0012	000	1	GROSVENOR	AVE	1570	Overhead	Distribution	Luminaire	LUM HPS RWY 50W	Active	50	65485-54003	S-14	CITY OF E PROVIDENCE
0013	000	2	GROSVENOR	AVE	1570	Overhead	Distribution	Luminaire	LUM HPS RWY 100W TT	Temp Turn Off	100	65485-54003	S-14	CITY OF E PROVIDENCE
0014	000	1	GROSVENOR	AVE	1570	Overhead	Distribution	Luminaire	LUM HPS RWY 50W	Active	50	65485-54003	S-14	CITY OF E PROVIDENCE
0016	000	2	GROSVENOR	AVE	1570	Overhead	Distribution	Luminaire	LUM HPS RWY 50W	Active	50	65485-54003	S-14	CITY OF E PROVIDENCE
0017	000	2	GROSVENOR	AVE	1570	Overhead	Distribution	Luminaire	LUM HPS RWY 50W TT	Temp Turn Off	50	65485-54003	S-14	CITY OF E PROVIDENCE
0018	000	2	GROSVENOR	AVE	1570	Overhead	Distribution	Luminaire	LUM HPS RWY 50W	Active	50	65485-54003	S-14	CITY OF E PROVIDENCE
0019	000	2	GROSVENOR	AVE	1570	Overhead	Distribution	Luminaire	LUM HPS RWY 50W	Active	50	65485-54003	S-14	CITY OF E PROVIDENCE
0020	000	1	GROSVENOR	AVE	1570	Overhead	Distribution	Luminaire	LUM HPS RWY 50W	Active	50	65485-54003	S-14	CITY OF E PROVIDENCE
0021	000	1	GROSVENOR	AVE	1570	Overhead	Distribution	Luminaire	LUM HPS RWY 50W	Active	50	65485-54003	S-14	CITY OF E PROVIDENCE
0022	000	1	GROSVENOR	AVE	1570	Overhead	Distribution	Luminaire	LUM HPS RWY 50W	Active	50	65485-54003	S-14	CITY OF E PROVIDENCE
0023	000	2	GROSVENOR	AVE	1570	Overhead	Distribution	Luminaire	LUM HPS RWY 100W	Active	100	65485-54003	S-14	CITY OF E PROVIDENCE
0024	000	1	GROSVENOR	AVE	1570	Overhead	Distribution	Luminaire	LUM HPS RWY 50W	Active	50	65485-54003	S-14	CITY OF E PROVIDENCE
0025	000	1	GROSVENOR	AVE	1570	Overhead	Distribution	Luminaire	LUM HPS RWY 50W	Active	50	65485-54003	S-14	CITY OF E PROVIDENCE
0026	000	2	GROSVENOR	AVE	1570	Overhead	Distribution	Luminaire	LUM HPS RWY 50W	Active	50	65485-54003	S-14	CITY OF E PROVIDENCE
0027	000	1	GROSVENOR	AVE	1570	Overhead	Distribution	Luminaire	LUM HPS RWY 50W	Active	50	65485-54003	S-14	CITY OF E PROVIDENCE
0028	000	2	GROSVENOR	AVE	1570	Overhead	Distribution	Luminaire	LUM HPS RWY 100W TT	Temp Turn Off	100	65485-54003	S-14	CITY OF E PROVIDENCE
0031	000	2	GROSVENOR	AVE	1570	Overhead	Distribution	Luminaire	LUM HPS RWY 100W	Active	100	65485-54003	S-14	CITY OF E PROVIDENCE
0033	000	2	GROSVENOR	AVE	1570	Overhead	Distribution	Luminaire	LUM HPS RWY 100W TT	Temp Turn Off	100	65485-54003	S-14	CITY OF E PROVIDENCE
0034	000	2	GROSVENOR	AVE	1570	Overhead	Distribution	Luminaire	LUM HPS RWY 50W	Active	50	65485-54003	S-14	CITY OF E PROVIDENCE

Pole No	Pole Suffix	Light Sequ No	Street Name	Street Suffix	Ngrid Line No	Source Type	Pole Use	Component Type	Bill Print and Tariff Description	Billing Status	Lamp Wattage	Account No	Rate	Customer Name
0035	000	2	GROSVENOR	AVE	1570	Overhead	Distribution	Luminaire	LUM HPS RWY 100W TT	Temp Turn Off	100	65485-54003	S-14	CITY OF E PROVIDENCE
0036	000	2	GROSVENOR	AVE	1570	Overhead	Distribution	Luminaire	LUM HPS RWY 100W TT	Temp Turn Off	100	65485-54003	S-14	CITY OF E PROVIDENCE
0037	000	1	GROSVENOR	AVE	1570	Overhead	Distribution	Luminaire	LUM HPS RWY 50W	Active	50	65485-54003	S-14	CITY OF E PROVIDENCE
0040	000	1	GROSVENOR	AVE	1570	Overhead	Distribution	Luminaire	LUM HPS RWY 50W	Active	50	65485-54003	S-14	CITY OF E PROVIDENCE
0001	000	2	GROVE	AVE	1575	Overhead	Distribution	Luminaire	LUM HPS RWY 250W TT	Temp Turn Off	250	65485-54003	S-14	CITY OF E PROVIDENCE
0002	000	2	GROVE	AVE	1575	Overhead	Distribution	Luminaire	LUM HPS RWY 250W	Active	250	65485-54003	S-14	CITY OF E PROVIDENCE
0003	000	2	GROVE	AVE	1575	Overhead	Distribution	Luminaire	LUM HPS RWY 250W TT	Temp Turn Off	250	65485-54003	S-14	CITY OF E PROVIDENCE
0004	000	2	GROVE	AVE	1575	Overhead	Distribution	Luminaire	LUM HPS RWY 100W TT	Temp Turn Off	100	65485-54003	S-14	CITY OF E PROVIDENCE
0005	000	1	GROVE	AVE	1575	Overhead	Distribution	Luminaire	LUM HPS RWY 50W	Active	50	65485-54003	S-14	CITY OF E PROVIDENCE
0006	000	2	GROVE	AVE	1575	Overhead	Distribution	Luminaire	LUM HPS RWY 100W TT	Temp Turn Off	100	65485-54003	S-14	CITY OF E PROVIDENCE
0007	000	1	GROVE	AVE	1575	Overhead	Distribution	Luminaire	LUM HPS RWY 50W	Active	50	65485-54003	S-14	CITY OF E PROVIDENCE
0008	000	1	GROVE	AVE	1575	Overhead	Distribution	Luminaire	LUM HPS RWY 50W	Active	50	65485-54003	S-14	CITY OF E PROVIDENCE
0009	000	2	GROVE	AVE	1575	Overhead	Distribution	Luminaire	LUM HPS RWY 100W	Active	100	65485-54003	S-14	CITY OF E PROVIDENCE
0010	000	1	GROVE	AVE	1575	Overhead	Distribution	Luminaire	LUM HPS RWY 100W	Active	100	65485-54003	S-14	CITY OF E PROVIDENCE
0011	000	1	GROVE	AVE	1575	Overhead	Distribution	Luminaire	LUM HPS RWY 50W	Active	50	65485-54003	S-14	CITY OF E PROVIDENCE
0012	000	1	GROVE	AVE	1575	Overhead	Distribution	Luminaire	LUM HPS RWY 50W	Active	50	65485-54003	S-14	CITY OF E PROVIDENCE
0013	000	1	GROVE	AVE	1575	Overhead	Distribution	Luminaire	LUM HPS RWY 50W	Active	50	65485-54003	S-14	CITY OF E PROVIDENCE
0015	000	1	GROVE	AVE	1575	Overhead	Distribution	Luminaire	LUM HPS RWY 50W	Active	50	65485-54003	S-14	CITY OF E PROVIDENCE
0016	000	2	GROVE	AVE	1575	Overhead	Distribution	Luminaire	LUM HPS RWY 100W	Active	100	65485-54003	S-14	CITY OF E PROVIDENCE
0017	000	1	GROVE	AVE	1575	Overhead	Distribution	Luminaire	LUM HPS RWY 50W	Active	50	65485-54003	S-14	CITY OF E PROVIDENCE
0018	000	2	GROVE	AVE	1575	Overhead	Distribution	Luminaire	LUM HPS RWY 100W TT	Temp Turn Off	100	65485-54003	S-14	CITY OF E PROVIDENCE
0019	000	1	GROVE	AVE	1575	Overhead	Distribution	Luminaire	LUM HPS RWY 50W	Active	50	65485-54003	S-14	CITY OF E PROVIDENCE
0020	000	2	GROVE	AVE	1575	Overhead	Distribution	Luminaire	LUM HPS RWY 100W TT	Temp Turn Off	100	65485-54003	S-14	CITY OF E PROVIDENCE
0021	000	1	GROVE	AVE	1575	Overhead	Distribution	Luminaire	LUM HPS RWY 50W	Active	50	65485-54003	S-14	CITY OF E PROVIDENCE
0022	000	1	GROVE	AVE	1575	Overhead	Distribution	Luminaire	LUM HPS RWY 50W	Active	50	65485-54003	S-14	CITY OF E PROVIDENCE
0001	000	2	GURNEY	ST	1580	Overhead	Distribution	Luminaire	LUM HPS RWY 50W TT	Temp Turn Off	50	65485-54003	S-14	CITY OF E PROVIDENCE
0003	000	2	GURNEY	ST	1580	Overhead	Distribution	Luminaire	LUM HPS RWY 50W	Active	50	65485-54003	S-14	CITY OF E PROVIDENCE
0005	000	2	GURNEY	ST	1580	Overhead	Distribution	Luminaire	LUM HPS RWY 50W TT	Temp Turn Off	50	65485-54003	S-14	CITY OF E PROVIDENCE
0007	000	2	GURNEY	ST	1580	Overhead	Distribution	Luminaire	LUM HPS RWY 50W	Active	50	65485-54003	S-14	CITY OF E PROVIDENCE
0001	000	2	HALIBURTON	RD	1590	Overhead	Distribution	Luminaire	LUM HPS RWY 50W	Active	50	65485-54003	S-14	CITY OF E PROVIDENCE
0002	000	2	HALIBURTON	RD	1590	Overhead	Distribution	Luminaire	LUM HPS RWY 50W	Active	50	65485-54003	S-14	CITY OF E PROVIDENCE
0004	000	2	HALIBURTON	RD	1590	Overhead	Distribution	Luminaire	LUM HPS RWY 50W	Active	50	65485-54003	S-14	CITY OF E PROVIDENCE
0005	000	2	HALIBURTON	RD	1590	Overhead	Distribution	Luminaire	LUM HPS RWY 50W	Active	50	65485-54003	S-14	CITY OF E PROVIDENCE
0001	000	2	HALL	ST	1595	Overhead	Distribution	Luminaire	LUM HPS RWY 250W TT	Temp Turn Off	250	65485-54003	S-14	CITY OF E PROVIDENCE
0002	000	1	HALL	ST	1595	Overhead	Distribution	Luminaire	LUM HPS RWY 100W	Inactive	100	65485-54003	S-14	CITY OF E PROVIDENCE
0003	000	1	HALL	ST	1595	Overhead	Distribution	Luminaire	LUM HPS RWY 100W	Active	100	65485-54003	S-14	CITY OF E PROVIDENCE
0004	000	2	HALL	ST	1595	Overhead	Distribution	Luminaire	LUM HPS RWY 250W TT	Temp Turn Off	250	65485-54003	S-14	CITY OF E PROVIDENCE
0005	000	1	HALL	ST	1595	Overhead	Distribution	Luminaire	LUM HPS RWY 100W	Active	100	65485-54003	S-14	CITY OF E PROVIDENCE
0006	000	2	HALL	ST	1595	Overhead	Distribution	Luminaire	LUM HPS RWY 50W	Active	50	65485-54003	S-14	CITY OF E PROVIDENCE
0007	000	1	HALL	ST	1595	Overhead	Distribution	Luminaire	LUM HPS RWY 100W	Inactive	100	65485-54003	S-14	CITY OF E PROVIDENCE
0008	000	2	HALL	ST	1595	Overhead	Distribution	Luminaire	LUM HPS RWY 50W	Active	50	65485-54003	S-14	CITY OF E PROVIDENCE
0010	000	2	HALL	ST	1595	Overhead	Distribution	Luminaire	LUM HPS RWY 50W	Active	50	65485-54003	S-14	CITY OF E PROVIDENCE
0001	000	2	HALLECK	AVE	1600	Overhead	Distribution	Luminaire	LUM HPS RWY 50W	Active	50	65485-54003	S-14	CITY OF E PROVIDENCE
0002	000	2	HALLECK	AVE	1600	Overhead	Distribution	Luminaire	LUM HPS RWY 50W TT	Temp Turn Off	50	90426-19008	S-14	CITY OF E PROVIDENCE
0005	000	2	HALLECK	AVE	1600	Overhead	Distribution	Luminaire	LUM HPS RWY 50W TT	Temp Turn Off	50	65485-54003	S-14	CITY OF E PROVIDENCE
0006	000	2	HALLECK	AVE	1600	Overhead	Distribution	Luminaire	LUM HPS RWY 50W	Active	50	65485-54003	S-14	CITY OF E PROVIDENCE
0007	000	2	HALLECK	AVE	1600	Overhead	Distribution	Luminaire	LUM HPS RWY 50W TT	Temp Turn Off	50	90426-19008	S-14	CITY OF E PROVIDENCE
0029	000	2	HALLECK	AVE	1600	Overhead	Distribution	Luminaire	LUM HPS RWY 50W	Active	50	65485-54003	S-14	CITY OF E PROVIDENCE
0001	000	2	HAMILTON	ST	1605	Overhead	Distribution	Luminaire	LUM HPS RWY 50W TT	Temp Turn Off	50	65485-54003	S-14	CITY OF E PROVIDENCE
0002	000	2	HAMILTON	ST	1605	Overhead	Distribution	Luminaire	LUM HPS RWY 50W TT	Temp Turn Off	50	65485-54003	S-14	CITY OF E PROVIDENCE
0004	000	2	HAMILTON	ST	1605	Overhead	Distribution	Luminaire	LUM HPS RWY 50W	Active	50	65485-54003	S-14	CITY OF E PROVIDENCE
0005	000	2	HAMILTON	ST	1605	Overhead	Distribution	Luminaire	LUM HPS RWY 50W	Active	50	65485-54003	S-14	CITY OF E PROVIDENCE
0001	000	2	HARDING	AVE	1615	Overhead	Distribution	Luminaire	LUM HPS RWY 50W	Active	50	65485-54003	S-14	CITY OF E PROVIDENCE
0002	000	2	HARDING	AVE	1615	Overhead	Distribution	Luminaire	LUM HPS RWY 50W	Active	50	65485-54003	S-14	CITY OF E PROVIDENCE
0003	000	2	HARDING	AVE	1615	Overhead	Distribution	Luminaire	LUM HPS RWY 50W	Active	50	65485-54003	S-14	CITY OF E PROVIDENCE

Pole No	Pole Suffix	Light Sequ No	Street Name	Street Suffix	Ngrid Line No	Source Type	Pole Use	Component Type	Bill Print and Tariff Description	Billing Status	Lamp Wattage	Account No	Rate	Customer Name
0004	000	2	HARDING	AVE	1615	Overhead	Distribution	Luminaire	LUM HPS RWY 50W	Active	50	65485-54003	S-14	CITY OF E PROVIDENCE
0005	000	2	HARDING	AVE	1615	Overhead	Distribution	Luminaire	LUM HPS RWY 50W TT	Temp Turn Off	50	65485-54003	S-14	CITY OF E PROVIDENCE
0006	000	2	HARDING	AVE	1615	Overhead	Distribution	Luminaire	LUM HPS RWY 50W	Active	50	90426-19008	S-14	CITY OF E PROVIDENCE
0002	000	2	HARLEM	ST	1620	Overhead	Distribution	Luminaire	LUM HPS RWY 50W	Active	50	65485-54003	S-14	CITY OF E PROVIDENCE
0004	000	2	HARLEM	ST	1620	Overhead	Distribution	Luminaire	LUM HPS RWY 50W	Active	50	65485-54003	S-14	CITY OF E PROVIDENCE
0007	000	2	HARLEM	ST	1620	Overhead	Distribution	Luminaire	LUM HPS RWY 50W	Active	50	90426-19008	S-14	CITY OF E PROVIDENCE
0005	000	2	HAROLD	ST	1625	Overhead	Distribution	Luminaire	LUM HPS RWY 50W	Active	50	65485-54003	S-14	CITY OF E PROVIDENCE
0005	012	2	HARRIET	ST	1630	Overhead	Distribution	Luminaire	LUM HPS RWY 50W	Active	50	65485-54003	S-14	CITY OF E PROVIDENCE
0005	040	2	HARRIET	ST	1630	Overhead	Distribution	Luminaire	LUM HPS RWY 50W	Active	50	90426-19008	S-14	CITY OF E PROVIDENCE
0002	000	2	HARRINGTON	ST	1635	Overhead	Distribution	Luminaire	LUM HPS RWY 50W	Active	50	65485-54003	S-14	CITY OF E PROVIDENCE
0003	000	2	HARRINGTON	ST	1635	Overhead	Distribution	Luminaire	LUM HPS RWY 50W TT	Temp Turn Off	50	90426-19008	S-14	CITY OF E PROVIDENCE
0001	000	2	HARRIS	ST	1640	Overhead	Distribution	Luminaire	LUM HPS RWY 50W TT	Temp Turn Off	50	65485-54003	S-14	CITY OF E PROVIDENCE
0003	000	2	HARRIS	ST	1640	Overhead	Distribution	Luminaire	LUM HPS RWY 50W TT	Temp Turn Off	50	65485-54003	S-14	CITY OF E PROVIDENCE
0004	000	2	HARRIS	ST	1640	Overhead	Distribution	Luminaire	LUM HPS RWY 50W	Active	50	65485-54003	S-14	CITY OF E PROVIDENCE
0005	000	2	HARRIS	ST	1640	Overhead	Distribution	Luminaire	LUM HPS RWY 50W TT	Temp Turn Off	50	65485-54003	S-14	CITY OF E PROVIDENCE
0007	000	2	HARRIS	ST	1640	Overhead	Distribution	Luminaire	LUM HPS RWY 50W	Active	50	65485-54003	S-14	CITY OF E PROVIDENCE
0008	000	2	HARRIS	ST	1640	Overhead	Distribution	Luminaire	LUM HPS RWY 50W	Active	50	65485-54003	S-14	CITY OF E PROVIDENCE
0010	000	2	HARRIS	ST	1640	Overhead	Distribution	Luminaire	LUM HPS RWY 50W	Active	50	65485-54003	S-14	CITY OF E PROVIDENCE
0011	000	2	HARRIS	ST	1640	Overhead	Distribution	Luminaire	LUM HPS RWY 50W	Active	50	65485-54003	S-14	CITY OF E PROVIDENCE
0012	000	2	HARRIS	ST	1640	Overhead	Distribution	Luminaire	LUM HPS RWY 100W TT	Temp Turn Off	100	65485-54003	S-14	CITY OF E PROVIDENCE
0004	000	2	HARTFORD	AVE	1650	Overhead	Distribution	Luminaire	LUM HPS RWY 50W	Active	50	65485-54003	S-14	CITY OF E PROVIDENCE
0006	000	2	HARTFORD	AVE	1650	Overhead	Distribution	Luminaire	LUM HPS RWY 50W TT	Temp Turn Off	50	65485-54003	S-14	CITY OF E PROVIDENCE
0007	000	2	HARTFORD	AVE	1650	Overhead	Distribution	Luminaire	LUM HPS RWY 50W	Active	50	65485-54003	S-14	CITY OF E PROVIDENCE
0009	000	2	HARTFORD	AVE	1650	Overhead	Distribution	Luminaire	LUM HPS RWY 50W TT	Temp Turn Off	50	65485-54003	S-14	CITY OF E PROVIDENCE
0010	000	2	HARTFORD	AVE	1650	Overhead	Distribution	Luminaire	LUM HPS RWY 50W TT	Temp Turn Off	50	65485-54003	S-14	CITY OF E PROVIDENCE
0011	000	2	HARTFORD	AVE	1650	Overhead	Distribution	Luminaire	LUM HPS RWY 50W	Active	50	65485-54003	S-14	CITY OF E PROVIDENCE
0002	000	2	HARVEY	AVE	1660	Overhead	Distribution	Luminaire	LUM HPS RWY 50W	Active	50	65485-54003	S-14	CITY OF E PROVIDENCE
0003	000	2	HARVEY	AVE	1660	Overhead	Distribution	Luminaire	LUM HPS RWY 50W TT	Temp Turn Off	50	65485-54003	S-14	CITY OF E PROVIDENCE
0005	000	2	HARVEY	AVE	1660	Overhead	Distribution	Luminaire	LUM HPS RWY 50W	Active	50	65485-54003	S-14	CITY OF E PROVIDENCE
0002	000	1	HASCALL	ST	1663	Overhead	Distribution	Luminaire	LUM HPS RWY 50W	Active	50	65485-54003	S-14	CITY OF E PROVIDENCE
0002	000	2	HATTON	ST	1670	Overhead	Distribution	Luminaire	LUM HPS RWY 50W	Active	50	65485-54003	S-14	CITY OF E PROVIDENCE
0004	000	2	HATTON	ST	1670	Overhead	Distribution	Luminaire	LUM HPS RWY 50W	Active	50	65485-54003	S-14	CITY OF E PROVIDENCE
0001	000	2	HAWTHORNE	AVE	1675	Overhead	Distribution	Luminaire	LUM HPS RWY 50W	Active	50	65485-54003	S-14	CITY OF E PROVIDENCE
0002	000	2	HAWTHORNE	AVE	1675	Overhead	Distribution	Luminaire	LUM HPS RWY 250W	Active	250	90426-19008	S-14	CITY OF E PROVIDENCE
0003	000	2	HAWTHORNE	AVE	1675	Overhead	Distribution	Luminaire	LUM HPS RWY 50W	Active	50	65485-54003	S-14	CITY OF E PROVIDENCE
0004	000	2	HAWTHORNE	AVE	1675	Overhead	Distribution	Luminaire	LUM HPS RWY 50W TT	Temp Turn Off	50	65485-54003	S-14	CITY OF E PROVIDENCE
0005	000	1	HAWTHORNE	AVE	1675	Overhead	Distribution	Luminaire	LUM HPS RWY 50W	Active	50	90426-19008	S-14	CITY OF E PROVIDENCE
0002	000	2	HAZARD	ST	1685	Overhead	Distribution	Luminaire	LUM HPS RWY 50W	Active	50	65485-54003	S-14	CITY OF E PROVIDENCE
0003	000	2	HAZARD	ST	1685	Overhead	Distribution	Luminaire	LUM HPS RWY 50W TT	Temp Turn Off	50	65485-54003	S-14	CITY OF E PROVIDENCE
0005	000	2	HAZARD	ST	1685	Overhead	Distribution	Luminaire	LUM HPS RWY 50W	Active	50	65485-54003	S-14	CITY OF E PROVIDENCE
0007	000	2	HAZARD	ST	1685	Overhead	Distribution	Luminaire	LUM HPS RWY 50W	Active	50	65485-54003	S-14	CITY OF E PROVIDENCE
0009	000	1	HAZARD	ST	1685	Overhead	Distribution	Luminaire	LUM HPS RWY 50W	Active	50	65485-54003	S-14	CITY OF E PROVIDENCE
0011	000	2	HAZARD	ST	1685	Overhead	Distribution	Luminaire	LUM HPS RWY 50W	Active	50	65485-54003	S-14	CITY OF E PROVIDENCE
0013	000	2	HAZARD	ST	1685	Overhead	Distribution	Luminaire	LUM HPS RWY 50W	Active	50	65485-54003	S-14	CITY OF E PROVIDENCE
0016	000	2	HAZARD	ST	1685	Overhead	Distribution	Luminaire	LUM HPS RWY 50W	Active	50	65485-54003	S-14	CITY OF E PROVIDENCE
0017	000	2	HAZARD	ST	1685	Overhead	Distribution	Luminaire	LUM HPS RWY 50W	Active	50	65485-54003	S-14	CITY OF E PROVIDENCE
0001	000	2	HAZELWOOD	AVE	1690	Overhead	Distribution	Luminaire	LUM HPS RWY 50W	Active	50	65485-54003	S-14	CITY OF E PROVIDENCE
0003	000	2	HAZELWOOD	AVE	1690	Overhead	Distribution	Luminaire	LUM HPS RWY 50W	Active	50	65485-54003	S-14	CITY OF E PROVIDENCE
0005	000	2	HAZELWOOD	AVE	1690	Overhead	Distribution	Luminaire	LUM HPS RWY 50W	Active	50	65485-54003	S-14	CITY OF E PROVIDENCE
0006	000	2	HAZELWOOD	AVE	1690	Overhead	Distribution	Luminaire	LUM HPS RWY 50W TT	Temp Turn Off	50	65485-54003	S-14	CITY OF E PROVIDENCE
0008	000	2	HAZELWOOD	AVE	1690	Overhead	Distribution	Luminaire	LUM HPS RWY 50W	Active	50	65485-54003	S-14	CITY OF E PROVIDENCE
0010	000	2	HAZELWOOD	AVE	1690	Overhead	Distribution	Luminaire	LUM HPS RWY 50W	Active	50	65485-54003	S-14	CITY OF E PROVIDENCE
0002	000	2	HEATH	ST	1700	Overhead	Distribution	Luminaire	LUM HPS RWY 50W	Active	50	65485-54003	S-14	CITY OF E PROVIDENCE
0004	000	2	HEATH	ST	1700	Overhead	Distribution	Luminaire	LUM HPS RWY 50W	Active	50	65485-54003	S-14	CITY OF E PROVIDENCE
0006	000	2	HEATH	ST	1700	Overhead	Distribution	Luminaire	LUM HPS RWY 50W	Active	50	65485-54003	S-14	CITY OF E PROVIDENCE

Pole No	Pole Suffix	Light Sequ No	Street Name	Street Suffix	Ngrid Line No	Source Type	Pole Use	Component Type	Bill Print and Tariff Description	Billing Status	Lamp Wattage	Account No	Rate	Customer Name
0007	000	2	HEATH	ST	1700	Overhead	Distribution	Luminaire	LUM HPS RWY 50W	Active	50	65485-54003	S-14	CITY OF E PROVIDENCE
0008	000	2	HEATH	ST	1700	Overhead	Distribution	Luminaire	LUM HPS RWY 50W	Active	50	65485-54003	S-14	CITY OF E PROVIDENCE
0010	000	2	HEATH	ST	1700	Overhead	Distribution	Luminaire	LUM HPS RWY 50W	Active	50	65485-54003	S-14	CITY OF E PROVIDENCE
0001	000	2	HEDLEY	CIR	1710	Overhead	Distribution	Luminaire	LUM HPS RWY 50W	Active	50	65485-54003	S-14	CITY OF E PROVIDENCE
0004	000	2	HEDLEY	CIR	1710	Overhead	Distribution	Luminaire	LUM HPS RWY 50W	Active	50	65485-54003	S-14	CITY OF E PROVIDENCE
0005	000	2	HEDLEY	CIR	1710	Overhead	Distribution	Luminaire	LUM HPS RWY 50W	Active	50	65485-54003	S-14	CITY OF E PROVIDENCE
0006	000	2	HEDLEY	CIR	1710	Overhead	Distribution	Luminaire	LUM MV RWY 100W	Active	100	65485-54003	S-14	CITY OF E PROVIDENCE
0007	000	2	HEDLEY	CIR	1710	Overhead	Distribution	Luminaire	LUM HPS RWY 50W	Active	50	65485-54003	S-14	CITY OF E PROVIDENCE
0001	000	2	HEMINGWAY	DR	1712	Overhead	Distribution	Luminaire	LUM HPS RWY 50W	Active	50	90426-19008	S-14	CITY OF E PROVIDENCE
0003	000	2	HEMINGWAY	DR	1712	Overhead	Distribution	Luminaire	LUM HPS RWY 50W TT	Temp Turn Off	50	90426-19008	S-14	CITY OF E PROVIDENCE
0005	000	2	HEMINGWAY	DR	1712	Overhead	Distribution	Luminaire	LUM HPS RWY 50W	Active	50	90426-19008	S-14	CITY OF E PROVIDENCE
0001	000	2	HENRY	ST	1715	Overhead	Distribution	Luminaire	LUM HPS RWY 50W TT	Temp Turn Off	50	65485-54003	S-14	CITY OF E PROVIDENCE
0002	000	2	HENRY	ST	1715	Overhead	Distribution	Luminaire	LUM HPS RWY 50W	Active	50	65485-54003	S-14	CITY OF E PROVIDENCE
0001	000	2	HICKS	ST	1720	Overhead	Distribution	Luminaire	LUM HPS RWY 50W TT	Temp Turn Off	50	65485-54003	S-14	CITY OF E PROVIDENCE
0002	000	2	HICKS	ST	1720	Overhead	Distribution	Luminaire	LUM HPS RWY 50W	Active	50	65485-54003	S-14	CITY OF E PROVIDENCE
0003	000	2	HICKS	ST	1720	Overhead	Distribution	Luminaire	LUM HPS RWY 50W TT	Temp Turn Off	50	65485-54003	S-14	CITY OF E PROVIDENCE
0004	000	2	HICKS	ST	1720	Overhead	Distribution	Luminaire	LUM HPS RWY 50W	Active	50	65485-54003	S-14	CITY OF E PROVIDENCE
0005	000	2	HICKS	ST	1720	Overhead	Distribution	Luminaire	LUM HPS RWY 50W TT	Temp Turn Off	50	65485-54003	S-14	CITY OF E PROVIDENCE
0007	000	2	HICKS	ST	1720	Overhead	Distribution	Luminaire	LUM HPS RWY 50W	Active	50	65485-54003	S-14	CITY OF E PROVIDENCE
0002	000	2	HIGH	ST	1725	Overhead	Distribution	Luminaire	LUM HPS RWY 50W	Active	50	65485-54003	S-14	CITY OF E PROVIDENCE
0001	000	1	HIGHLAND	AVE	1730	Overhead	Distribution	Luminaire	LUM HPS RWY 100W	Active	100	65485-54003	S-14	CITY OF E PROVIDENCE
0001	050	1	HIGHLAND	AVE	1730	Overhead	Distribution	Luminaire	LUM HPS RWY 100W	Active	100	65485-54003	S-14	CITY OF E PROVIDENCE
0002	000	1	HIGHLAND	AVE	1730	Overhead	Distribution	Luminaire	LUM HPS RWY 100W	Active	100	65485-54003	S-14	CITY OF E PROVIDENCE
0003	000	2	HIGHLAND	AVE	1730	Overhead	Distribution	Luminaire	LUM HPS RWY 250W TT	Temp Turn Off	250	65485-54003	S-14	CITY OF E PROVIDENCE
0004	000	1	HIGHLAND	AVE	1730	Overhead	Distribution	Luminaire	LUM HPS RWY 100W	Active	100	65485-54003	S-14	CITY OF E PROVIDENCE
0005	000	2	HIGHLAND	AVE	1730	Overhead	Distribution	Luminaire	LUM HPS RWY 400W TT	Temp Turn Off	400	65485-54003	S-14	CITY OF E PROVIDENCE
0006	000	1	HIGHLAND	AVE	1730	Overhead	Distribution	Luminaire	LUM HPS RWY 100W	Active	100	65485-54003	S-14	CITY OF E PROVIDENCE
0006	050	2	HIGHLAND	AVE	1730	Overhead	Distribution	Luminaire	LUM HPS RWY 400W TT	Temp Turn Off	400	65485-54003	S-14	CITY OF E PROVIDENCE
0007	000	1	HIGHLAND	AVE	1730	Overhead	Distribution	Luminaire	LUM HPS RWY 100W	Active	100	65485-54003	S-14	CITY OF E PROVIDENCE
0008	000	2	HIGHLAND	AVE	1730	Overhead	Distribution	Luminaire	LUM HPS RWY 250W TT	Temp Turn Off	250	65485-54003	S-14	CITY OF E PROVIDENCE
0009	000	1	HIGHLAND	AVE	1730	Overhead	Distribution	Luminaire	LUM HPS RWY 100W	Active	100	65485-54003	S-14	CITY OF E PROVIDENCE
0201	001	2	HIGHLAND	AVE	1730	Overhead	Distribution	Luminaire	LUM HPS RWY 250W	Active	250	65485-54003	S-14	CITY OF E PROVIDENCE
0001	000	2	HILL	CT	1735	Overhead	Distribution	Luminaire	LUM HPS RWY 50W	Active	50	65485-54003	S-14	CITY OF E PROVIDENCE
0002	000	2	HILL	CT	1735	Overhead	Distribution	Luminaire	LUM HPS RWY 50W	Active	50	65485-54003	S-14	CITY OF E PROVIDENCE
0001	000	2	HILL TOP	RD	1745	Overhead	Distribution	Luminaire	LUM HPS RWY 50W TT	Temp Turn Off	50	65485-54003	S-14	CITY OF E PROVIDENCE
0002	000	2	HILL TOP	RD	1745	Overhead	Distribution	Luminaire	LUM HPS RWY 50W	Active	50	65485-54003	S-14	CITY OF E PROVIDENCE
0003	000	2	HILL TOP	RD	1745	Overhead	Distribution	Luminaire	LUM HPS RWY 50W	Active	50	65485-54003	S-14	CITY OF E PROVIDENCE
0004	000	2	HILL TOP	RD	1745	Overhead	Distribution	Luminaire	LUM HPS RWY 50W	Active	50	65485-54003	S-14	CITY OF E PROVIDENCE
0005	000	2	HILL TOP	RD	1745	Overhead	Distribution	Luminaire	LUM HPS RWY 50W	Active	50	65485-54003	S-14	CITY OF E PROVIDENCE
0008	000	2	HILL TOP	RD	1745	Overhead	Distribution	Luminaire	LUM HPS RWY 50W	Active	50	65485-54003	S-14	CITY OF E PROVIDENCE
0002	000	2	HILLSIDE	AVE	1740	Overhead	Distribution	Luminaire	LUM HPS RWY 50W	Active	50	65485-54003	S-14	CITY OF E PROVIDENCE
0004	000	1	HILLSIDE	AVE	1740	Overhead	Distribution	Luminaire	LUM HPS RWY 50W	Active	50	65485-54003	S-14	CITY OF E PROVIDENCE
0005	000	2	HILLSIDE	AVE	1740	Overhead	Distribution	Luminaire	LUM HPS RWY 50W TT	Temp Turn Off	50	90426-19008	S-14	CITY OF E PROVIDENCE
0003	000	2	HILTON	AVE	1750	Overhead	Distribution	Luminaire	LUM HPS RWY 50W	Active	50	65485-54003	S-14	CITY OF E PROVIDENCE
0005	000	2	HILTON	AVE	1750	Overhead	Distribution	Luminaire	LUM HPS RWY 50W TT	Temp Turn Off	50	65485-54003	S-14	CITY OF E PROVIDENCE
0006	000	2	HILTON	AVE	1750	Overhead	Distribution	Luminaire	LUM HPS RWY 50W	Active	50	65485-54003	S-14	CITY OF E PROVIDENCE
0008	000	2	HILTON	AVE	1750	Overhead	Distribution	Luminaire	LUM HPS RWY 50W	Active	50	65485-54003	S-14	CITY OF E PROVIDENCE
0010	000	2	HILTON	AVE	1750	Overhead	Distribution	Luminaire	LUM HPS RWY 50W	Active	50	65485-54003	S-14	CITY OF E PROVIDENCE
0011	000	2	HILTON	AVE	1750	Overhead	Distribution	Luminaire	LUM HPS RWY 50W TT	Temp Turn Off	50	65485-54003	S-14	CITY OF E PROVIDENCE
0012	000	2	HILTON	AVE	1750	Overhead	Distribution	Luminaire	LUM HPS RWY 50W	Active	50	65485-54003	S-14	CITY OF E PROVIDENCE
9001	000	2	HILTON	AVE	1750	Overhead	Distribution	Luminaire	LUM HPS RWY 50W	Active	50	65485-54003	S-14	CITY OF E PROVIDENCE
0001	000	2	HOBSON	AVE	1755	Overhead	Distribution	Luminaire	LUM HPS RWY 50W	Active	50	65485-54003	S-14	CITY OF E PROVIDENCE
0003	000	2	HOBSON	AVE	1755	Overhead	Distribution	Luminaire	LUM HPS RWY 50W	Active	50	65485-54003	S-14	CITY OF E PROVIDENCE
0005	000	2	HOBSON	AVE	1755	Overhead	Distribution	Luminaire	LUM HPS RWY 50W	Active	50	65485-54003	S-14	CITY OF E PROVIDENCE
0007	000	2	HOBSON	AVE	1755	Overhead	Distribution	Luminaire	LUM HPS RWY 50W	Active	50	65485-54003	S-14	CITY OF E PROVIDENCE

Pole No	Pole Suffix	Light Sequ No	Street Name	Street Suffix	Ngrid Line No	Source Type	Pole Use	Component Type	Bill Print and Tariff Description	Billing Status	Lamp Wattage	Account No	Rate	Customer Name
0009	000	2	HOBSON	AVE	1755	Overhead	Distribution	Luminaire	LUM HPS RWY 50W	Active	50	65485-54003	S-14	CITY OF E PROVIDENCE
0011	000	1	HOBSON	AVE	1755	Overhead	Distribution	Luminaire	LUM HPS RWY 100W	Active	100	65485-54003	S-14	CITY OF E PROVIDENCE
0012	000	2	HOBSON	AVE	1755	Overhead	Distribution	Luminaire	LUM HPS RWY 50W TT	Temp Turn Off	50	65485-54003	S-14	CITY OF E PROVIDENCE
0013	000	2	HOBSON	AVE	1755	Overhead	Distribution	Luminaire	LUM HPS RWY 50W	Active	50	65485-54003	S-14	CITY OF E PROVIDENCE
0002	000	2	HOLBROOK	AVE	1760	Overhead	Distribution	Luminaire	LUM HPS RWY 50W	Active	50	65485-54003	S-14	CITY OF E PROVIDENCE
0004	000	2	HOLBROOK	AVE	1760	Overhead	Distribution	Luminaire	LUM HPS RWY 50W	Active	50	65485-54003	S-14	CITY OF E PROVIDENCE
0001	000	2	HOLLAND	AVE	1765	Overhead	Distribution	Luminaire	LUM HPS RWY 50W	Active	50	65485-54003	S-14	CITY OF E PROVIDENCE
0003	000	2	HOLLAND	AVE	1765	Overhead	Distribution	Luminaire	LUM HPS RWY 50W	Active	50	65485-54003	S-14	CITY OF E PROVIDENCE
0005	000	2	HOLLAND	AVE	1765	Overhead	Distribution	Luminaire	LUM HPS RWY 50W	Active	50	65485-54003	S-14	CITY OF E PROVIDENCE
0007	000	2	HOLLAND	AVE	1765	Overhead	Distribution	Luminaire	LUM HPS RWY 50W	Active	50	65485-54003	S-14	CITY OF E PROVIDENCE
0010	000	2	HOLLAND	AVE	1765	Overhead	Distribution	Luminaire	LUM HPS RWY 50W	Active	50	65485-54003	S-14	CITY OF E PROVIDENCE
0012	000	2	HOLLAND	AVE	1765	Overhead	Distribution	Luminaire	LUM HPS RWY 50W TT	Temp Turn Off	50	65485-54003	S-14	CITY OF E PROVIDENCE
0014	000	2	HOLLAND	AVE	1765	Overhead	Distribution	Luminaire	LUM HPS RWY 50W	Active	50	65485-54003	S-14	CITY OF E PROVIDENCE
0016	000	2	HOLLAND	AVE	1765	Overhead	Distribution	Luminaire	LUM HPS RWY 50W TT	Temp Turn Off	50	65485-54003	S-14	CITY OF E PROVIDENCE
0002	000	2	HOLLOW RIDGE	RD	1766	Overhead	Distribution	Luminaire	LUM HPS RWY 50W	Active	50	65485-54003	S-14	CITY OF E PROVIDENCE
0004	000	2	HOLLOW RIDGE	RD	1766	Overhead	Distribution	Luminaire	LUM HPS RWY 50W	Active	50	65485-54003	S-14	CITY OF E PROVIDENCE
0006	000	2	HOLLOW RIDGE	RD	1766	Overhead	Distribution	Luminaire	LUM HPS RWY 50W	Active	50	65485-54003	S-14	CITY OF E PROVIDENCE
0002	000	2	HOLLY	ST	1770	Overhead	Distribution	Luminaire	LUM HPS RWY 50W TT	Temp Turn Off	50	65485-54003	S-14	CITY OF E PROVIDENCE
0004	000	2	HOLLY	ST	1770	Overhead	Distribution	Luminaire	LUM HPS RWY 50W	Active	50	65485-54003	S-14	CITY OF E PROVIDENCE
0007	000	2	HOLLY	ST	1770	Overhead	Distribution	Luminaire	LUM HPS RWY 50W	Active	50	65485-54003	S-14	CITY OF E PROVIDENCE
0010	000	2	HOLLY	ST	1770	Overhead	Distribution	Luminaire	LUM HPS RWY 50W	Active	50	65485-54003	S-14	CITY OF E PROVIDENCE
0002	000	2	HOLMES	AVE	1775	Overhead	Distribution	Luminaire	LUM HPS RWY 50W	Active	50	65485-54003	S-14	CITY OF E PROVIDENCE
0001	000	2	HOLSMITH	CT	1780	Overhead	Distribution	Luminaire	LUM HPS RWY 50W	Active	50	65485-54003	S-14	CITY OF E PROVIDENCE
0002	000	2	HOOD	AVE	1785	Overhead	Distribution	Luminaire	LUM HPS RWY 50W	Active	50	65485-54003	S-14	CITY OF E PROVIDENCE
0004	000	2	HOOD	AVE	1785	Overhead	Distribution	Luminaire	LUM HPS RWY 50W	Active	50	65485-54003	S-14	CITY OF E PROVIDENCE
0006	000	2	HOOD	AVE	1785	Overhead	Distribution	Luminaire	LUM HPS RWY 50W	Active	50	65485-54003	S-14	CITY OF E PROVIDENCE
0008	000	2	HOOD	AVE	1785	Overhead	Distribution	Luminaire	LUM HPS RWY 50W	Active	50	65485-54003	S-14	CITY OF E PROVIDENCE
0001	000	2	HOPE	ST	1790	Overhead	Distribution	Luminaire	LUM HPS RWY 50W	Active	50	65485-54003	S-14	CITY OF E PROVIDENCE
0003	000	2	HOPE	ST	1790	Overhead	Distribution	Luminaire	LUM HPS RWY 50W	Active	50	65485-54003	S-14	CITY OF E PROVIDENCE
0005	000	2	HOPE	ST	1790	Overhead	Distribution	Luminaire	LUM HPS RWY 50W	Active	50	65485-54003	S-14	CITY OF E PROVIDENCE
0007	000	2	HOPE	ST	1790	Overhead	Distribution	Luminaire	LUM HPS RWY 50W	Active	50	65485-54003	S-14	CITY OF E PROVIDENCE
0009	000	2	HOPE	ST	1790	Overhead	Distribution	Luminaire	LUM HPS RWY 50W	Active	50	65485-54003	S-14	CITY OF E PROVIDENCE
0010	000	2	HOPE	ST	1790	Overhead	Distribution	Luminaire	LUM HPS RWY 50W	Active	50	65485-54003	S-14	CITY OF E PROVIDENCE
0001	000	1	HOPPIN	AVE	1795	Overhead	Distribution	Luminaire	LUM HPS RWY 50W	Active	50	65485-54003	S-14	CITY OF E PROVIDENCE
0002	000	2	HOPPIN	AVE	1795	Overhead	Distribution	Luminaire	LUM HPS RWY 50W TT	Temp Turn Off	50	90426-19008	S-14	CITY OF E PROVIDENCE
0003	000	2	HOPPIN	AVE	1795	Overhead	Distribution	Luminaire	LUM HPS RWY 50W	Active	50	65485-54003	S-14	CITY OF E PROVIDENCE
0004	000	2	HOPPIN	AVE	1795	Overhead	Distribution	Luminaire	LUM HPS RWY 50W TT	Temp Turn Off	50	65485-54003	S-14	CITY OF E PROVIDENCE
0006	000	2	HOPPIN	AVE	1795	Overhead	Distribution	Luminaire	LUM HPS RWY 100W	Active	100	65485-54003	S-14	CITY OF E PROVIDENCE
0007	000	1	HOPPIN	AVE	1795	Overhead	Distribution	Luminaire	LUM HPS RWY 50W	Active	50	65485-54003	S-14	CITY OF E PROVIDENCE
0009	000	2	HOPPIN	AVE	1795	Overhead	Distribution	Luminaire	LUM HPS RWY 100W TT	Temp Turn Off	100	65485-54003	S-14	CITY OF E PROVIDENCE
0010	000	2	HOPPIN	AVE	1795	Overhead	Distribution	Luminaire	LUM HPS RWY 50W	Active	50	65485-54003	S-14	CITY OF E PROVIDENCE
0011	000	2	HOPPIN	AVE	1795	Overhead	Distribution	Luminaire	LUM HPS RWY 50W TT	Temp Turn Off	50	65485-54003	S-14	CITY OF E PROVIDENCE
0013	000	2	HOPPIN	AVE	1795	Overhead	Distribution	Luminaire	LUM HPS RWY 50W	Active	50	65485-54003	S-14	CITY OF E PROVIDENCE
0016	000	2	HOPPIN	AVE	1795	Overhead	Distribution	Luminaire	LUM HPS RWY 50W	Active	50	65485-54003	S-14	CITY OF E PROVIDENCE
0017	000	2	HOPPIN	AVE	1795	Overhead	Distribution	Luminaire	LUM HPS RWY 50W	Active	50	65485-54003	S-14	CITY OF E PROVIDENCE
0001	000	2	HORSEFORD	AVE	1800	Overhead	Distribution	Luminaire	LUM HPS RWY 50W	Active	50	65485-54003	S-14	CITY OF E PROVIDENCE
0003	000	2	HORSEFORD	AVE	1800	Overhead	Distribution	Luminaire	LUM HPS RWY 50W	Active	50	65485-54003	S-14	CITY OF E PROVIDENCE
0005	000	2	HORSEFORD	AVE	1800	Overhead	Distribution	Luminaire	LUM HPS RWY 50W	Active	50	65485-54003	S-14	CITY OF E PROVIDENCE
0007	000	2	HORSEFORD	AVE	1800	Overhead	Distribution	Luminaire	LUM HPS RWY 50W	Active	50	65485-54003	S-14	CITY OF E PROVIDENCE
0002	000	1	HOSPITAL	RD	1810	Overhead	Distribution	Luminaire	LUM HPS RWY 50W	Active	50	65485-54003	S-14	CITY OF E PROVIDENCE
0004	000	1	HOSPITAL	RD	1810	Overhead	Distribution	Luminaire	LUM HPS RWY 50W	Active	50	65485-54003	S-14	CITY OF E PROVIDENCE
0007	000	1	HOSPITAL	RD	1810	Overhead	Distribution	Luminaire	LUM HPS RWY 50W	Active	50	65485-54003	S-14	CITY OF E PROVIDENCE
0008	000	2	HOSPITAL	RD	1810	Overhead	Distribution	Luminaire	LUM HPS RWY 100W TT	Temp Turn Off	100	65485-54003	S-14	CITY OF E PROVIDENCE
0009	000	1	HOSPITAL	RD	1810	Overhead	Distribution	Luminaire	LUM HPS RWY 50W	Active	50	65485-54003	S-14	CITY OF E PROVIDENCE
0010	000	2	HOSPITAL	RD	1810	Overhead	Distribution	Luminaire	LUM HPS RWY 50W	Active	50	65485-54003	S-14	CITY OF E PROVIDENCE

Pole No	Pole Suffix	Light Sequ No	Street Name	Street Suffix	Ngrid Line No	Source Type	Pole Use	Component Type	Bill Print and Tariff Description	Billing Status	Lamp Wattage	Account No	Rate	Customer Name
0011	000	1	HOSPITAL	RD	1810	Overhead	Distribution	Luminaire	LUM HPS RWY 50W	Active	50	65485-54003	S-14	CITY OF E PROVIDENCE
0011	001	1	HOSPITAL	RD	1810	Overhead	Distribution	Luminaire	LUM HPS FLD 250W	Inactive	250	65485-54003	S-14	CITY OF E PROVIDENCE
0011	001	2	HOSPITAL	RD	1810	Overhead	Distribution	Luminaire	LUM HPS RWY 50W	Inactive	50	65485-54003	S-14	CITY OF E PROVIDENCE
0011	005	1	HOSPITAL	RD	1810	Overhead	Distribution	Luminaire	LUM HPS RWY 50W	Inactive	50	65485-54003	S-14	CITY OF E PROVIDENCE
0011	007	1	HOSPITAL	RD	1810	Overhead	Distribution	Luminaire	LUM HPS RWY 50W	Inactive	50	65485-54003	S-14	CITY OF E PROVIDENCE
0011	009	1	HOSPITAL	RD	1810	Overhead	Distribution	Luminaire	LUM HPS RWY 50W	Inactive	50	65485-54003	S-14	CITY OF E PROVIDENCE
0011	031	1	HOSPITAL	RD	1810	Overhead	Distribution	Luminaire	LUM HPS RWY 100W	Inactive	100	65485-54003	S-14	CITY OF E PROVIDENCE
0004	000	2	HOWLAND	AVE	1815	Overhead	Distribution	Luminaire	LUM HPS RWY 50W	Active	50	65485-54003	S-14	CITY OF E PROVIDENCE
0005	000	2	HOWLAND	AVE	1815	Overhead	Distribution	Luminaire	LUM HPS RWY 50W TT	Temp Turn Off	50	90426-19008	S-14	CITY OF E PROVIDENCE
0006	000	2	HOWLAND	AVE	1815	Overhead	Distribution	Luminaire	LUM HPS RWY 50W	Active	50	65485-54003	S-14	CITY OF E PROVIDENCE
0008	000	2	HOWLAND	AVE	1815	Overhead	Distribution	Luminaire	LUM HPS RWY 50W	Active	50	65485-54003	S-14	CITY OF E PROVIDENCE
0009	000	2	HOWLAND	AVE	1815	Overhead	Distribution	Luminaire	LUM HPS RWY 50W TT	Temp Turn Off	50	65485-54003	S-14	CITY OF E PROVIDENCE
0010	000	2	HOWLAND	AVE	1815	Overhead	Distribution	Luminaire	LUM HPS RWY 50W	Active	50	65485-54003	S-14	CITY OF E PROVIDENCE
0011	000	2	HOWLAND	AVE	1815	Overhead	Distribution	Luminaire	LUM HPS RWY 50W	Active	50	65485-54003	S-14	CITY OF E PROVIDENCE
0012	000	2	HOWLAND	AVE	1815	Overhead	Distribution	Luminaire	LUM HPS RWY 50W	Active	50	65485-54003	S-14	CITY OF E PROVIDENCE
0013	000	2	HOWLAND	AVE	1815	Overhead	Distribution	Luminaire	LUM HPS RWY 50W TT	Temp Turn Off	50	65485-54003	S-14	CITY OF E PROVIDENCE
0014	000	2	HOWLAND	AVE	1815	Overhead	Distribution	Luminaire	LUM HPS RWY 50W	Active	50	65485-54003	S-14	CITY OF E PROVIDENCE
0015	000	1	HOWLAND	AVE	1815	Overhead	Distribution	Luminaire	LUM HPS RWY 100W TT	Temp Turn Off	100	65485-54003	S-14	CITY OF E PROVIDENCE
0016	000	1	HOWLAND	AVE	1815	Overhead	Distribution	Luminaire	LUM HPS RWY 50W	Active	50	65485-54003	S-14	CITY OF E PROVIDENCE
0017	000	2	HOWLAND	AVE	1815	Overhead	Distribution	Luminaire	LUM HPS RWY 50W	Active	50	90426-19008	S-14	CITY OF E PROVIDENCE
0001	000	2	HOYT	AVE	1820	Overhead	Distribution	Luminaire	LUM HPS RWY 50W	Active	50	65485-54003	S-14	CITY OF E PROVIDENCE
0003	000	2	HOYT	AVE	1820	Overhead	Distribution	Luminaire	LUM HPS RWY 50W	Active	50	65485-54003	S-14	CITY OF E PROVIDENCE
0004	000	2	HOYT	AVE	1820	Overhead	Distribution	Luminaire	LUM HPS RWY 50W TT	Temp Turn Off	50	65485-54003	S-14	CITY OF E PROVIDENCE
0005	000	2	HOYT	AVE	1820	Overhead	Distribution	Luminaire	LUM HPS RWY 50W	Active	50	65485-54003	S-14	CITY OF E PROVIDENCE
0006	000	2	HOYT	AVE	1820	Overhead	Distribution	Luminaire	LUM HPS RWY 50W TT	Temp Turn Off	50	65485-54003	S-14	CITY OF E PROVIDENCE
0008	000	2	HOYT	AVE	1820	Overhead	Distribution	Luminaire	LUM HPS RWY 50W	Active	50	65485-54003	S-14	CITY OF E PROVIDENCE
0011	000	1	HOYT	AVE	1820	Overhead	Distribution	Luminaire	LUM HPS RWY 50W	Active	50	65485-54003	S-14	CITY OF E PROVIDENCE
0013	000	1	HOYT	AVE	1820	Overhead	Distribution	Luminaire	LUM HPS RWY 50W	Active	50	65485-54003	S-14	CITY OF E PROVIDENCE
0015	000	1	HOYT	AVE	1820	Overhead	Distribution	Luminaire	LUM HPS RWY 50W	Active	50	65485-54003	S-14	CITY OF E PROVIDENCE
0017	000	1	HOYT	AVE	1820	Overhead	Distribution	Luminaire	LUM HPS RWY 50W	Active	50	65485-54003	S-14	CITY OF E PROVIDENCE
0019	000	1	HOYT	AVE	1820	Overhead	Distribution	Luminaire	LUM HPS RWY 50W	Active	50	65485-54003	S-14	CITY OF E PROVIDENCE
0001	000	2	HUMPHREY	ST	1835	Overhead	Distribution	Luminaire	LUM HPS RWY 50W	Active	50	65485-54003	S-14	CITY OF E PROVIDENCE
0003	000	2	HUMPHREY	ST	1835	Overhead	Distribution	Luminaire	LUM HPS RWY 50W TT	Temp Turn Off	50	65485-54003	S-14	CITY OF E PROVIDENCE
0004	000	2	HUMPHREY	ST	1835	Overhead	Distribution	Luminaire	LUM HPS RWY 50W TT	Temp Turn Off	50	65485-54003	S-14	CITY OF E PROVIDENCE
0002	000	2	HUNTINGTON	DR	1845	Overhead	Distribution	Luminaire	LUM HPS RWY 50W	Active	50	90426-19008	S-14	CITY OF E PROVIDENCE
0004	000	2	HUNTINGTON	DR	1845	Overhead	Distribution	Luminaire	LUM HPS RWY 50W	Active	50	65485-54003	S-14	CITY OF E PROVIDENCE
0001	000	2	HUNTS MILL	RD	1840	Overhead	Distribution	Luminaire	LUM HPS RWY 50W	Active	50	65485-54003	S-14	CITY OF E PROVIDENCE
0002	000	2	HUNTS MILL	RD	1840	Overhead	Distribution	Luminaire	LUM HPS RWY 50W TT	Temp Turn Off	50	65485-54003	S-14	CITY OF E PROVIDENCE
0003	000	2	HUNTS MILL	RD	1840	Overhead	Distribution	Luminaire	LUM HPS RWY 50W TT	Temp Turn Off	50	65485-54003	S-14	CITY OF E PROVIDENCE
0004	000	2	HUNTS MILL	RD	1840	Overhead	Distribution	Luminaire	LUM HPS RWY 50W	Active	50	65485-54003	S-14	CITY OF E PROVIDENCE
0005	000	2	HUNTS MILL	RD	1840	Overhead	Distribution	Luminaire	LUM HPS RWY 50W TT	Temp Turn Off	50	65485-54003	S-14	CITY OF E PROVIDENCE
0006	000	2	HUNTS MILL	RD	1840	Overhead	Distribution	Luminaire	LUM HPS RWY 50W TT	Temp Turn Off	50	65485-54003	S-14	CITY OF E PROVIDENCE
0007	000	2	HUNTS MILL	RD	1840	Overhead	Distribution	Luminaire	LUM HPS RWY 50W	Active	50	65485-54003	S-14	CITY OF E PROVIDENCE
0008	000	2	HUNTS MILL	RD	1840	Overhead	Distribution	Luminaire	LUM HPS RWY 50W TT	Temp Turn Off	50	65485-54003	S-14	CITY OF E PROVIDENCE
0009	000	2	HUNTS MILL	RD	1840	Overhead	Distribution	Luminaire	LUM HPS RWY 50W	Active	50	65485-54003	S-14	CITY OF E PROVIDENCE
0010	000	2	HUNTS MILL	RD	1840	Overhead	Distribution	Luminaire	LUM HPS RWY 50W	Active	50	65485-54003	S-14	CITY OF E PROVIDENCE
0002	000	1	IDE	AVE	1850	Overhead	Distribution	Luminaire	LUM HPS RWY 50W	Active	50	65485-54003	S-14	CITY OF E PROVIDENCE
0003	000	2	IDE	AVE	1850	Overhead	Distribution	Luminaire	LUM HPS RWY 50W	Active	50	65485-54003	S-14	CITY OF E PROVIDENCE
0006	000	2	IDE	AVE	1850	Overhead	Distribution	Luminaire	LUM HPS RWY 50W	Active	50	65485-54003	S-14	CITY OF E PROVIDENCE
0008	000	2	IDE	AVE	1850	Overhead	Distribution	Luminaire	LUM HPS RWY 50W	Active	50	65485-54003	S-14	CITY OF E PROVIDENCE
0001	000	2	INDIAN	RD	1855	Overhead	Distribution	Luminaire	LUM HPS RWY 50W	Active	50	65485-54003	S-14	CITY OF E PROVIDENCE
0002	000	2	INDIAN	RD	1855	Overhead	Distribution	Luminaire	LUM HPS RWY 50W TT	Temp Turn Off	50	65485-54003	S-14	CITY OF E PROVIDENCE
0003	000	2	INDIAN	RD	1855	Overhead	Distribution	Luminaire	LUM HPS RWY 50W	Active	50	65485-54003	S-14	CITY OF E PROVIDENCE
0004	000	2	INDIAN	RD	1855	Overhead	Distribution	Luminaire	LUM HPS RWY 50W TT	Temp Turn Off	50	65485-54003	S-14	CITY OF E PROVIDENCE
0006	000	2	INDIAN	RD	1855	Overhead	Distribution	Luminaire	LUM HPS RWY 50W	Active	50	65485-54003	S-14	CITY OF E PROVIDENCE

Pole No	Pole Suffix	Light Sequ No	Street Name	Street Suffix	Ngrid Line No	Source Type	Pole Use	Component Type	Bill Print and Tariff Description	Billing Status	Lamp Wattage	Account No	Rate	Customer Name
0007	000	2	INDIAN	RD	1855	Overhead	Distribution	Luminaire	LUM HPS RWY 50W	Active	50	90426-19008	S-14	CITY OF E PROVIDENCE
0008	000	2	INDIAN	RD	1855	Overhead	Distribution	Luminaire	LUM HPS RWY 50W	Active	50	65485-54003	S-14	CITY OF E PROVIDENCE
0010	000	2	INDIAN	RD	1855	Overhead	Distribution	Luminaire	LUM HPS RWY 50W	Active	50	65485-54003	S-14	CITY OF E PROVIDENCE
0002	000	2	INDUSTRIAL	CT	1858	Overhead	Distribution	Luminaire	LUM HPS RWY 50W	Active	50	65485-54003	S-14	CITY OF E PROVIDENCE
0003	000	2	INDUSTRIAL	CT	1858	Overhead	Distribution	Luminaire	LUM HPS RWY 50W	Active	50	65485-54003	S-14	CITY OF E PROVIDENCE
0004	000	2	INDUSTRIAL	WAY	1860	Overhead	Distribution	Luminaire	LUM HPS RWY 50W TT	Temp Turn Off	50	65485-54003	S-14	CITY OF E PROVIDENCE
0006	000	2	INDUSTRIAL	WAY	1860	Overhead	Distribution	Luminaire	LUM HPS RWY 50W	Active	50	65485-54003	S-14	CITY OF E PROVIDENCE
0002	000	2	INGLEWOOD	RD	1865	Overhead	Distribution	Luminaire	LUM HPS RWY 50W TT	Temp Turn Off	50	65485-54003	S-14	CITY OF E PROVIDENCE
0001	000	2	INGRAHAM	ST	1870	Overhead	Distribution	Luminaire	LUM HPS RWY 50W	Active	50	65485-54003	S-14	CITY OF E PROVIDENCE
0003	000	2	INGRAHAM	ST	1870	Overhead	Distribution	Luminaire	LUM HPS RWY 50W	Active	50	65485-54003	S-14	CITY OF E PROVIDENCE
0006	000	2	INGRAHAM	ST	1870	Overhead	Distribution	Luminaire	LUM HPS RWY 50W	Active	50	65485-54003	S-14	CITY OF E PROVIDENCE
0007	000	2	INGRAHAM	ST	1870	Overhead	Distribution	Luminaire	LUM HPS RWY 50W TT	Temp Turn Off	50	65485-54003	S-14	CITY OF E PROVIDENCE
0008	000	2	INGRAHAM	ST	1870	Overhead	Distribution	Luminaire	LUM HPS RWY 50W	Active	50	65485-54003	S-14	CITY OF E PROVIDENCE
0003	000	2	INMAN	ST	1875	Overhead	Distribution	Luminaire	LUM HPS RWY 50W	Active	50	65485-54003	S-14	CITY OF E PROVIDENCE
0001	000	2	INTERLOCKEN	RD	1880	Overhead	Distribution	Luminaire	LUM HPS RWY 50W	Active	50	65485-54003	S-14	CITY OF E PROVIDENCE
0002	000	2	INTERLOCKEN	RD	1880	Overhead	Distribution	Luminaire	LUM HPS RWY 50W	Active	50	65485-54003	S-14	CITY OF E PROVIDENCE
0003	000	2	INTERLOCKEN	RD	1880	Overhead	Distribution	Luminaire	LUM HPS RWY 50W TT	Temp Turn Off	50	90426-19008	S-14	CITY OF E PROVIDENCE
0004	000	2	INTERLOCKEN	RD	1880	Overhead	Distribution	Luminaire	LUM HPS RWY 50W	Active	50	65485-54003	S-14	CITY OF E PROVIDENCE
0006	000	2	INTERLOCKEN	RD	1880	Overhead	Distribution	Luminaire	LUM HPS RWY 50W	Active	50	65485-54003	S-14	CITY OF E PROVIDENCE
0008	000	2	INTERLOCKEN	RD	1880	Overhead	Distribution	Luminaire	LUM HPS RWY 50W	Active	50	65485-54003	S-14	CITY OF E PROVIDENCE
0010	000	2	INTERLOCKEN	RD	1880	Overhead	Distribution	Luminaire	LUM HPS RWY 50W	Active	50	65485-54003	S-14	CITY OF E PROVIDENCE
0012	000	2	INTERLOCKEN	RD	1880	Overhead	Distribution	Luminaire	LUM HPS RWY 50W	Active	50	65485-54003	S-14	CITY OF E PROVIDENCE
0002	000	2	INTERVALE	AVE	1885	Overhead	Distribution	Luminaire	LUM HPS RWY 50W	Active	50	65485-54003	S-14	CITY OF E PROVIDENCE
0003	000	2	INTERVALE	AVE	1885	Overhead	Distribution	Luminaire	LUM HPS RWY 50W TT	Temp Turn Off	50	65485-54003	S-14	CITY OF E PROVIDENCE
0004	000	2	INTERVALE	AVE	1885	Overhead	Distribution	Luminaire	LUM HPS RWY 50W	Active	50	90426-19008	S-14	CITY OF E PROVIDENCE
0006	000	2	INTERVALE	AVE	1885	Overhead	Distribution	Luminaire	LUM HPS RWY 50W	Active	50	65485-54003	S-14	CITY OF E PROVIDENCE
0007	000	2	INTERVALE	AVE	1885	Overhead	Distribution	Luminaire	LUM HPS RWY 50W TT	Temp Turn Off	50	65485-54003	S-14	CITY OF E PROVIDENCE
0002	000	2	IRVING	AVE	1890	Overhead	Distribution	Luminaire	LUM HPS RWY 50W	Active	50	65485-54003	S-14	CITY OF E PROVIDENCE
0004	000	2	IRVING	AVE	1890	Overhead	Distribution	Luminaire	LUM HPS RWY 50W	Active	50	65485-54003	S-14	CITY OF E PROVIDENCE
0006	000	2	IRVING	AVE	1890	Overhead	Distribution	Luminaire	LUM HPS RWY 50W	Active	50	65485-54003	S-14	CITY OF E PROVIDENCE
0009	000	2	IRVING	AVE	1890	Overhead	Distribution	Luminaire	LUM HPS RWY 50W	Active	50	65485-54003	S-14	CITY OF E PROVIDENCE
0011	000	2	IRVING	AVE	1890	Overhead	Distribution	Luminaire	LUM HPS RWY 50W	Active	50	65485-54003	S-14	CITY OF E PROVIDENCE
0012	000	2	IRVING	AVE	1890	Overhead	Distribution	Luminaire	LUM HPS RWY 50W TT	Temp Turn Off	50	65485-54003	S-14	CITY OF E PROVIDENCE
0013	000	2	IRVING	AVE	1890	Overhead	Distribution	Luminaire	LUM HPS RWY 50W	Active	50	65485-54003	S-14	CITY OF E PROVIDENCE
0015	000	2	IRVING	AVE	1890	Overhead	Distribution	Luminaire	LUM HPS RWY 50W	Active	50	65485-54003	S-14	CITY OF E PROVIDENCE
0017	000	2	IRVING	AVE	1890	Overhead	Distribution	Luminaire	LUM HPS RWY 50W	Active	50	65485-54003	S-14	CITY OF E PROVIDENCE
0002	000	2	ISLAND	AVE	1895	Overhead	Distribution	Luminaire	LUM HPS RWY 50W	Active	50	65485-54003	S-14	CITY OF E PROVIDENCE
0004	000	2	ISLAND	AVE	1895	Overhead	Distribution	Luminaire	LUM HPS RWY 50W	Active	50	65485-54003	S-14	CITY OF E PROVIDENCE
0001	000	2	IVAN	AVE	1900	Overhead	Distribution	Luminaire	LUM HPS RWY 50W	Active	50	65485-54003	S-14	CITY OF E PROVIDENCE
0002	000	2	IVAN	AVE	1900	Overhead	Distribution	Luminaire	LUM HPS RWY 50W TT	Temp Turn Off	50	65485-54003	S-14	CITY OF E PROVIDENCE
0003	000	2	IVAN	AVE	1900	Overhead	Distribution	Luminaire	LUM HPS RWY 50W	Active	50	65485-54003	S-14	CITY OF E PROVIDENCE
0004	000	2	IVAN	AVE	1900	Overhead	Distribution	Luminaire	LUM HPS RWY 50W TT	Temp Turn Off	50	65485-54003	S-14	CITY OF E PROVIDENCE
0005	000	2	IVAN	AVE	1900	Overhead	Distribution	Luminaire	LUM HPS RWY 50W	Active	50	65485-54003	S-14	CITY OF E PROVIDENCE
0008	000	2	IVAN	AVE	1900	Overhead	Distribution	Luminaire	LUM HPS RWY 50W	Active	50	65485-54003	S-14	CITY OF E PROVIDENCE
0009	000	1	IVAN	AVE	1900	Overhead	Distribution	Luminaire	LUM HPS RWY 50W	Inactive	50	65485-54003	S-14	CITY OF E PROVIDENCE
0001	050	2	IVY	ST	1905	Overhead	Distribution	Luminaire	LUM HPS RWY 50W	Active	50	65485-54003	S-14	CITY OF E PROVIDENCE
0003	000	2	IVY	ST	1905	Overhead	Distribution	Luminaire	LUM HPS RWY 50W	Active	50	65485-54003	S-14	CITY OF E PROVIDENCE
0004	000	2	IVY	ST	1905	Overhead	Distribution	Luminaire	LUM HPS RWY 50W TT	Temp Turn Off	50	65485-54003	S-14	CITY OF E PROVIDENCE
0005	000	2	IVY	ST	1905	Overhead	Distribution	Luminaire	LUM HPS RWY 50W	Active	50	65485-54003	S-14	CITY OF E PROVIDENCE
0006	000	2	IVY	ST	1905	Overhead	Distribution	Luminaire	LUM HPS RWY 50W TT	Temp Turn Off	50	65485-54003	S-14	CITY OF E PROVIDENCE
0007	000	2	IVY	ST	1905	Overhead	Distribution	Luminaire	LUM HPS RWY 50W	Active	50	65485-54003	S-14	CITY OF E PROVIDENCE
0009	000	2	IVY	ST	1905	Overhead	Distribution	Luminaire	LUM HPS RWY 50W	Active	50	65485-54003	S-14	CITY OF E PROVIDENCE
0010	000	2	IVY	ST	1905	Overhead	Distribution	Luminaire	LUM HPS RWY 50W TT	Temp Turn Off	50	65485-54003	S-14	CITY OF E PROVIDENCE
0011	000	2	IVY	ST	1905	Overhead	Distribution	Luminaire	LUM HPS RWY 50W	Active	50	65485-54003	S-14	CITY OF E PROVIDENCE
0013	000	2	IVY	ST	1905	Overhead	Distribution	Luminaire	LUM HPS RWY 50W	Active	50	65485-54003	S-14	CITY OF E PROVIDENCE

Pole No	Pole Suffix	Light Sequ No	Street Name	Street Suffix	Ngrid Line No	Source Type	Pole Use	Component Type	Bill Print and Tariff Description	Billing Status	Lamp Wattage	Account No	Rate	Customer Name
0014	000	2	IVY	ST	1905	Overhead	Distribution	Luminaire	LUM HPS RWY 50W TT	Temp Turn Off	50	90426-19008	S-14	CITY OF E PROVIDENCE
0015	000	2	IVY	ST	1905	Overhead	Distribution	Luminaire	LUM HPS RWY 50W	Active	50	65485-54003	S-14	CITY OF E PROVIDENCE
0017	000	2	IVY	ST	1905	Overhead	Distribution	Luminaire	LUM HPS RWY 50W	Active	50	65485-54003	S-14	CITY OF E PROVIDENCE
0018	000	2	IVY	ST	1905	Overhead	Distribution	Luminaire	LUM HPS RWY 50W	Active	50	65485-54003	S-14	CITY OF E PROVIDENCE
0002	000	2	JACKSON	AVE	1910	Overhead	Distribution	Luminaire	LUM HPS RWY 50W	Active	50	65485-54003	S-14	CITY OF E PROVIDENCE
0004	000	2	JACKSON	AVE	1910	Overhead	Distribution	Luminaire	LUM HPS RWY 50W	Active	50	65485-54003	S-14	CITY OF E PROVIDENCE
0006	000	2	JACKSON	AVE	1910	Overhead	Distribution	Luminaire	LUM HPS RWY 50W	Active	50	65485-54003	S-14	CITY OF E PROVIDENCE
0009	000	2	JACKSON	AVE	1910	Overhead	Distribution	Luminaire	LUM HPS RWY 50W	Active	50	65485-54003	S-14	CITY OF E PROVIDENCE
0000	050	2	JAMES	ST	1915	Overhead	Distribution	Luminaire	LUM HPS RWY 50W TT	Temp Turn Off	50	65485-54003	S-14	CITY OF E PROVIDENCE
0001	000	2	JAMES	ST	1915	Overhead	Distribution	Luminaire	LUM HPS RWY 50W	Active	50	65485-54003	S-14	CITY OF E PROVIDENCE
0002	000	2	JAMES	ST	1915	Overhead	Distribution	Luminaire	LUM HPS RWY 50W TT	Temp Turn Off	50	65485-54003	S-14	CITY OF E PROVIDENCE
0003	000	2	JAMES	ST	1915	Overhead	Distribution	Luminaire	LUM HPS RWY 50W	Active	50	65485-54003	S-14	CITY OF E PROVIDENCE
0004	000	2	JAMES	ST	1915	Overhead	Distribution	Luminaire	LUM HPS RWY 50W TT	Temp Turn Off	50	65485-54003	S-14	CITY OF E PROVIDENCE
0005	000	2	JAMES	ST	1915	Overhead	Distribution	Luminaire	LUM HPS RWY 50W	Active	50	65485-54003	S-14	CITY OF E PROVIDENCE
0006	000	2	JAMES	ST	1915	Overhead	Distribution	Luminaire	LUM HPS RWY 50W	Active	50	65485-54003	S-14	CITY OF E PROVIDENCE
0007	000	2	JAMES	ST	1915	Overhead	Distribution	Luminaire	LUM HPS RWY 50W	Active	50	65485-54003	S-14	CITY OF E PROVIDENCE
0008	000	2	JAMES	ST	1915	Overhead	Distribution	Luminaire	LUM HPS RWY 50W	Active	50	65485-54003	S-14	CITY OF E PROVIDENCE
0009	000	2	JAMES	ST	1915	Overhead	Distribution	Luminaire	LUM HPS RWY 50W	Active	50	65485-54003	S-14	CITY OF E PROVIDENCE
0010	000	2	JAMES	ST	1915	Overhead	Distribution	Luminaire	LUM HPS RWY 50W TT	Temp Turn Off	50	65485-54003	S-14	CITY OF E PROVIDENCE
0011	000	2	JAMES	ST	1915	Overhead	Distribution	Luminaire	LUM HPS RWY 50W	Active	50	65485-54003	S-14	CITY OF E PROVIDENCE
0012	000	2	JAMES	ST	1915	Overhead	Distribution	Luminaire	LUM HPS RWY 50W TT	Temp Turn Off	50	65485-54003	S-14	CITY OF E PROVIDENCE
0013	000	2	JAMES	ST	1915	Overhead	Distribution	Luminaire	LUM HPS RWY 50W	Active	50	65485-54003	S-14	CITY OF E PROVIDENCE
0018	000	2	JAMES	ST	1915	Overhead	Distribution	Luminaire	LUM HPS RWY 50W	Active	50	65485-54003	S-14	CITY OF E PROVIDENCE
0020	000	2	JAMES	ST	1915	Overhead	Distribution	Luminaire	LUM HPS RWY 50W	Active	50	65485-54003	S-14	CITY OF E PROVIDENCE
0022	000	2	JAMES	ST	1915	Overhead	Distribution	Luminaire	LUM HPS RWY 50W	Active	50	65485-54003	S-14	CITY OF E PROVIDENCE
0001	000	2	JAY	ST	1920	Overhead	Distribution	Luminaire	LUM HPS RWY 50W	Active	50	65485-54003	S-14	CITY OF E PROVIDENCE
0002	000	2	JAY	ST	1920	Overhead	Distribution	Luminaire	LUM HPS RWY 50W TT	Temp Turn Off	50	65485-54003	S-14	CITY OF E PROVIDENCE
0004	000	2	JAY	ST	1920	Overhead	Distribution	Luminaire	LUM HPS RWY 50W	Active	50	65485-54003	S-14	CITY OF E PROVIDENCE
0006	000	2	JAY	ST	1920	Overhead	Distribution	Luminaire	LUM HPS RWY 50W	Active	50	65485-54003	S-14	CITY OF E PROVIDENCE
0007	000	2	JAY	ST	1920	Overhead	Distribution	Luminaire	LUM HPS RWY 50W TT	Temp Turn Off	50	65485-54003	S-14	CITY OF E PROVIDENCE
0008	000	2	JAY	ST	1920	Overhead	Distribution	Luminaire	LUM HPS RWY 50W	Active	50	65485-54003	S-14	CITY OF E PROVIDENCE
0009	000	2	JAY	ST	1920	Overhead	Distribution	Luminaire	LUM HPS RWY 50W	Active	50	65485-54003	S-14	CITY OF E PROVIDENCE
0002	000	2	JEFFERSON	AVE	1925	Overhead	Distribution	Luminaire	LUM HPS RWY 50W	Active	50	65485-54003	S-14	CITY OF E PROVIDENCE
0003	000	2	JEFFERSON	AVE	1925	Overhead	Distribution	Luminaire	LUM HPS RWY 50W	Active	50	65485-54003	S-14	CITY OF E PROVIDENCE
0002	000	2	JENKS	ST	1930	Overhead	Distribution	Luminaire	LUM HPS RWY 50W	Active	50	65485-54003	S-14	CITY OF E PROVIDENCE
0004	000	2	JENKS	ST	1930	Overhead	Distribution	Luminaire	LUM HPS RWY 50W	Active	50	65485-54003	S-14	CITY OF E PROVIDENCE
0006	000	2	JENKS	ST	1930	Overhead	Distribution	Luminaire	LUM HPS RWY 50W	Active	50	65485-54003	S-14	CITY OF E PROVIDENCE
0008	000	2	JENKS	ST	1930	Overhead	Distribution	Luminaire	LUM HPS RWY 50W	Active	50	65485-54003	S-14	CITY OF E PROVIDENCE
0003	000	2	JILL	CT	1932	Overhead	Distribution	Luminaire	LUM HPS RWY 50W	Active	50	90426-19008	S-14	CITY OF E PROVIDENCE
0002	000	2	JOHN	ST	1935	Overhead	Distribution	Luminaire	LUM HPS RWY 50W	Active	50	65485-54003	S-14	CITY OF E PROVIDENCE
0005	000	2	JOHN	ST	1935	Overhead	Distribution	Luminaire	LUM HPS RWY 50W	Active	50	65485-54003	S-14	CITY OF E PROVIDENCE
0007	000	2	JOHN	ST	1935	Overhead	Distribution	Luminaire	LUM HPS RWY 50W	Active	50	65485-54003	S-14	CITY OF E PROVIDENCE
0009	000	2	JOHN	ST	1935	Overhead	Distribution	Luminaire	LUM HPS RWY 250W TT	Temp Turn Off	250	65485-54003	S-14	CITY OF E PROVIDENCE
0011	000	1	JOHN	ST	1935	Overhead	Distribution	Luminaire	LUM HPS RWY 100W	Active	100	65485-54003	S-14	CITY OF E PROVIDENCE
0012	000	2	JOHN	ST	1935	Overhead	Distribution	Luminaire	LUM HPS RWY 250W TT	Temp Turn Off	250	65485-54003	S-14	CITY OF E PROVIDENCE
0013	000	2	JOHN	ST	1935	Overhead	Distribution	Luminaire	LUM HPS RWY 250W	Active	250	65485-54003	S-14	CITY OF E PROVIDENCE
0013	035	2	JOHN	ST	1935	Overhead	Distribution	Luminaire	LUM HPS RWY 50W	Active	50	65485-54003	S-14	CITY OF E PROVIDENCE
0014	000	2	JOHN	ST	1935	Overhead	Distribution	Luminaire	LUM HPS RWY 50W	Active	50	65485-54003	S-14	CITY OF E PROVIDENCE
0001	000	0	JORDAN	ST	1936	Underground	Street Lighting	Pole	POLE METAL W/BASE	Inactive	0	65485-54003	S-14	CITY OF E PROVIDENCE
0001	000	2	JORDAN	ST	1936	Underground	Street Lighting	Luminaire	LUM HPS RWY 250W	Red Cap Perm	250	65485-54003	S-14	CITY OF E PROVIDENCE
0002	000	0	JORDAN	ST	1936	Underground	Street Lighting	Pole	POLE METAL W/BASE	Active	0	65485-54003	S-14	CITY OF E PROVIDENCE
0002	000	1	JORDAN	ST	1936	Underground	Street Lighting	Luminaire	LUM HPS RWY 50W	Active	50	65485-54003	S-14	CITY OF E PROVIDENCE
0002	000	2	JOSEPHINE	AVE	1945	Overhead	Distribution	Luminaire	LUM HPS RWY 50W	Active	50	65485-54003	S-14	CITY OF E PROVIDENCE
0004	000	2	JOSEPHINE	AVE	1945	Overhead	Distribution	Luminaire	LUM HPS RWY 50W	Active	50	65485-54003	S-14	CITY OF E PROVIDENCE
0005	000	2	JOSEPHINE	AVE	1945	Overhead	Distribution	Luminaire	LUM HPS RWY 50W	Active	50	65485-54003	S-14	CITY OF E PROVIDENCE

Pole No	Pole Suffix	Light Sequ No	Street Name	Street Suffix	Ngrid Line No	Source Type	Pole Use	Component Type	Bill Print and Tariff Description	Billing Status	Lamp Wattage	Account No	Rate	Customer Name
0002	000	2	JUDKINS	ST	1950	Overhead	Distribution	Luminaire	LUM HPS RWY 50W	Active	50	65485-54003	S-14	CITY OF E PROVIDENCE
0003	000	2	JUDKINS	ST	1950	Overhead	Distribution	Luminaire	LUM HPS RWY 50W	Active	50	90426-19008	S-14	CITY OF E PROVIDENCE
0001	000	2	JULIE ANN	CIR	1956	Overhead	Distribution	Luminaire	LUM HPS RWY 50W	Active	50	65485-54003	S-14	CITY OF E PROVIDENCE
0003	000	2	JULIE ANN	CIR	1956	Overhead	Distribution	Luminaire	LUM HPS RWY 50W	Active	50	65485-54003	S-14	CITY OF E PROVIDENCE
0003	000	2	JULIEN	AVE	1955	Overhead	Distribution	Luminaire	LUM HPS RWY 50W	Active	50	65485-54003	S-14	CITY OF E PROVIDENCE
0005	000	2	JULIEN	AVE	1955	Overhead	Distribution	Luminaire	LUM HPS RWY 50W	Active	50	65485-54003	S-14	CITY OF E PROVIDENCE
0001	000	2	JUNIPER	ST	1960	Overhead	Distribution	Luminaire	LUM HPS RWY 50W TT	Temp Turn Off	50	65485-54003	S-14	CITY OF E PROVIDENCE
0002	000	2	JUNIPER	ST	1960	Overhead	Distribution	Luminaire	LUM HPS RWY 50W	Active	50	65485-54003	S-14	CITY OF E PROVIDENCE
0003	000	2	JUNIPER	ST	1960	Overhead	Distribution	Luminaire	LUM HPS RWY 50W TT	Temp Turn Off	50	65485-54003	S-14	CITY OF E PROVIDENCE
0006	000	2	JUNIPER	ST	1960	Overhead	Distribution	Luminaire	LUM HPS RWY 50W	Active	50	65485-54003	S-14	CITY OF E PROVIDENCE
0009	000	2	JUNIPER	ST	1960	Overhead	Distribution	Luminaire	LUM HPS RWY 50W	Active	50	65485-54003	S-14	CITY OF E PROVIDENCE
0011	000	2	JUNIPER	ST	1960	Overhead	Distribution	Luminaire	LUM HPS RWY 50W	Active	50	65485-54003	S-14	CITY OF E PROVIDENCE
0014	000	2	JUNIPER	ST	1960	Overhead	Distribution	Luminaire	LUM HPS RWY 50W	Active	50	65485-54003	S-14	CITY OF E PROVIDENCE
0015	000	1	JUNIPER	ST	1960	Overhead	Distribution	Luminaire	LUM HPS RWY 100W	Inactive	100	65485-54003	S-14	CITY OF E PROVIDENCE
0016	000	1	JUNIPER	ST	1960	Overhead	Distribution	Luminaire	LUM HPS RWY 100W	Active	100	65485-54003	S-14	CITY OF E PROVIDENCE
0018	000	2	JUNIPER	ST	1960	Overhead	Distribution	Luminaire	LUM HPS RWY 50W	Active	50	65485-54003	S-14	CITY OF E PROVIDENCE
0020	000	2	JUNIPER	ST	1960	Overhead	Distribution	Luminaire	LUM HPS RWY 50W	Active	50	65485-54003	S-14	CITY OF E PROVIDENCE
0022	000	2	JUNIPER	ST	1960	Overhead	Distribution	Luminaire	LUM HPS RWY 50W	Active	50	65485-54003	S-14	CITY OF E PROVIDENCE
0024	000	2	JUNIPER	ST	1960	Overhead	Distribution	Luminaire	LUM HPS RWY 50W	Active	50	65485-54003	S-14	CITY OF E PROVIDENCE
0027	000	2	JUNIPER	ST	1960	Overhead	Distribution	Luminaire	LUM HPS RWY 50W	Active	50	65485-54003	S-14	CITY OF E PROVIDENCE
0029	000	2	JUNIPER	ST	1960	Overhead	Distribution	Luminaire	LUM HPS RWY 50W	Active	50	65485-54003	S-14	CITY OF E PROVIDENCE
0031	000	2	JUNIPER	ST	1960	Overhead	Distribution	Luminaire	LUM HPS RWY 50W	Active	50	65485-54003	S-14	CITY OF E PROVIDENCE
0032	000	2	JUNIPER	ST	1960	Overhead	Distribution	Luminaire	LUM HPS RWY 50W	Active	50	65485-54003	S-14	CITY OF E PROVIDENCE
0033	000	2	JUNIPER	ST	1960	Overhead	Distribution	Luminaire	LUM HPS RWY 50W	Active	50	65485-54003	S-14	CITY OF E PROVIDENCE
0002	000	2	KELLY	AVE	1965	Overhead	Distribution	Luminaire	LUM HPS RWY 50W	Active	50	65485-54003	S-14	CITY OF E PROVIDENCE
0004	000	2	KELLY	AVE	1965	Overhead	Distribution	Luminaire	LUM HPS RWY 50W	Active	50	65485-54003	S-14	CITY OF E PROVIDENCE
0006	000	2	KELLY	AVE	1965	Overhead	Distribution	Luminaire	LUM HPS RWY 50W TT	Temp Turn Off	50	65485-54003	S-14	CITY OF E PROVIDENCE
0007	000	2	KELLY	AVE	1965	Overhead	Distribution	Luminaire	LUM HPS RWY 50W	Active	50	65485-54003	S-14	CITY OF E PROVIDENCE
0009	000	2	KELLY	AVE	1965	Overhead	Distribution	Luminaire	LUM HPS RWY 50W	Active	50	65485-54003	S-14	CITY OF E PROVIDENCE
0001	000	2	KENSINGTON	ST	1975	Overhead	Distribution	Luminaire	LUM HPS RWY 50W	Active	50	65485-54003	S-14	CITY OF E PROVIDENCE
0002	000	2	KENSINGTON	ST	1975	Overhead	Distribution	Luminaire	LUM HPS RWY 50W TT	Temp Turn Off	50	65485-54003	S-14	CITY OF E PROVIDENCE
0004	000	2	KENSINGTON	ST	1975	Overhead	Distribution	Luminaire	LUM HPS RWY 50W	Active	50	65485-54003	S-14	CITY OF E PROVIDENCE
0001	000	2	KENT	AVE	1980	Overhead	Distribution	Luminaire	LUM HPS RWY 50W	Active	50	65485-54003	S-14	CITY OF E PROVIDENCE
0002	000	2	KENT	AVE	1980	Overhead	Distribution	Luminaire	LUM HPS RWY 50W	Active	50	65485-54003	S-14	CITY OF E PROVIDENCE
0004	000	2	KENT	AVE	1980	Overhead	Distribution	Luminaire	LUM HPS RWY 50W	Active	50	65485-54003	S-14	CITY OF E PROVIDENCE
0006	000	2	KENT	AVE	1980	Overhead	Distribution	Luminaire	LUM HPS RWY 50W	Active	50	90426-19008	S-14	CITY OF E PROVIDENCE
0007	000	2	KENT	AVE	1980	Overhead	Distribution	Luminaire	LUM HPS RWY 50W	Active	50	65485-54003	S-14	CITY OF E PROVIDENCE
0002	000	2	KENTON	AVE	1990	Overhead	Distribution	Luminaire	LUM HPS RWY 50W	Active	50	65485-54003	S-14	CITY OF E PROVIDENCE
0005	000	2	KENTON	AVE	1990	Overhead	Distribution	Luminaire	LUM HPS RWY 50W	Active	50	65485-54003	S-14	CITY OF E PROVIDENCE
0007	000	1	KETTLE	PT	1995	Overhead	Distribution	Luminaire	LUM HPS RWY 50W	Active	50	90426-19008	S-14	CITY OF E PROVIDENCE
0010	000	2	KETTLE	PT	1995	Overhead	Distribution	Luminaire	LUM HPS RWY 250W	Active	250	90426-19008	S-14	CITY OF E PROVIDENCE
0002	000	2	KING PHILLIP	RD	4000	Overhead	Distribution	Luminaire	LUM HPS RWY 50W	Active	50	65485-54003	S-14	CITY OF E PROVIDENCE
0004	000	2	KING PHILLIP	RD	4000	Overhead	Distribution	Luminaire	LUM HPS RWY 50W	Active	50	65485-54003	S-14	CITY OF E PROVIDENCE
0006	000	2	KING PHILLIP	RD	4000	Overhead	Distribution	Luminaire	LUM HPS RWY 50W	Active	50	65485-54003	S-14	CITY OF E PROVIDENCE
0008	000	2	KING PHILLIP	RD	4000	Overhead	Distribution	Luminaire	LUM HPS RWY 50W	Active	50	65485-54003	S-14	CITY OF E PROVIDENCE
0010	000	2	KING PHILLIP	RD	4000	Overhead	Distribution	Luminaire	LUM HPS RWY 50W	Active	50	65485-54003	S-14	CITY OF E PROVIDENCE
0002	000	2	KINGSFORD	AVE	4005	Overhead	Distribution	Luminaire	LUM HPS RWY 50W	Active	50	65485-54003	S-14	CITY OF E PROVIDENCE
0004	000	2	KINGSFORD	AVE	4005	Overhead	Distribution	Luminaire	LUM HPS RWY 50W	Active	50	65485-54003	S-14	CITY OF E PROVIDENCE
0006	000	2	KINGSFORD	AVE	4005	Overhead	Distribution	Luminaire	LUM HPS RWY 50W	Active	50	65485-54003	S-14	CITY OF E PROVIDENCE
0007	000	2	KINGSFORD	AVE	4005	Overhead	Distribution	Luminaire	LUM HPS RWY 50W TT	Temp Turn Off	50	65485-54003	S-14	CITY OF E PROVIDENCE
0000	050	2	KNOWLTON	ST	4010	Overhead	Distribution	Luminaire	LUM HPS RWY 50W TT	Temp Turn Off	50	65485-54003	S-14	CITY OF E PROVIDENCE
0001	000	2	KNOWLTON	ST	4010	Overhead	Distribution	Luminaire	LUM HPS RWY 50W	Active	50	65485-54003	S-14	CITY OF E PROVIDENCE
0003	000	2	KNOWLTON	ST	4010	Overhead	Distribution	Luminaire	LUM HPS RWY 50W	Active	50	65485-54003	S-14	CITY OF E PROVIDENCE
0004	000	2	KNOWLTON	ST	4010	Overhead	Distribution	Luminaire	LUM HPS RWY 50W	Active	50	65485-54003	S-14	CITY OF E PROVIDENCE
0006	000	2	KNOWLTON	ST	4010	Overhead	Distribution	Luminaire	LUM HPS RWY 50W	Active	50	65485-54003	S-14	CITY OF E PROVIDENCE

Pole No	Pole Suffix	Light Sequ No	Street Name	Street Suffix	Ngrid Line No	Source Type	Pole Use	Component Type	Bill Print and Tariff Description	Billing Status	Lamp Wattage	Account No	Rate	Customer Name
0008	000	2	KNOWLTON	ST	4010	Overhead	Distribution	Luminaire	LUM HPS RWY 50W TT	Temp Turn Off	50	65485-54003	S-14	CITY OF E PROVIDENCE
0010	000	2	KNOWLTON	ST	4010	Overhead	Distribution	Luminaire	LUM HPS RWY 50W	Active	50	65485-54003	S-14	CITY OF E PROVIDENCE
0002	000	2	LAKESIDE	CIR	4019	Overhead	Distribution	Luminaire	LUM HPS RWY 50W	Active	50	65485-54003	S-14	CITY OF E PROVIDENCE
0000	050	2	LAKESIDE	ST	4020	Overhead	Distribution	Luminaire	LUM HPS RWY 50W	Active	50	65485-54003	S-14	CITY OF E PROVIDENCE
0003	000	2	LAKESIDE	ST	4020	Overhead	Distribution	Luminaire	LUM HPS RWY 50W	Active	50	65485-54003	S-14	CITY OF E PROVIDENCE
0005	000	2	LAKESIDE	ST	4020	Overhead	Distribution	Luminaire	LUM HPS RWY 50W	Active	50	65485-54003	S-14	CITY OF E PROVIDENCE
0007	000	2	LAKESIDE	ST	4020	Overhead	Distribution	Luminaire	LUM HPS RWY 50W	Active	50	65485-54003	S-14	CITY OF E PROVIDENCE
0001	000	2	LAMONT	ST	4025	Overhead	Distribution	Luminaire	LUM HPS RWY 50W TT	Temp Turn Off	50	65485-54003	S-14	CITY OF E PROVIDENCE
0002	000	2	LANTERN	LN	4030	Overhead	Distribution	Luminaire	LUM HPS RWY 50W TT	Temp Turn Off	50	65485-54003	S-14	CITY OF E PROVIDENCE
0001	000	2	LARCH	ST	4035	Overhead	Distribution	Luminaire	LUM HPS RWY 50W	Active	50	65485-54003	S-14	CITY OF E PROVIDENCE
0002	000	2	LARCH	ST	4035	Overhead	Distribution	Luminaire	LUM HPS RWY 50W	Active	50	65485-54003	S-14	CITY OF E PROVIDENCE
0004	000	2	LARCH	ST	4035	Overhead	Distribution	Luminaire	LUM HPS RWY 50W TT	Temp Turn Off	50	65485-54003	S-14	CITY OF E PROVIDENCE
0005	000	2	LARCH	ST	4035	Overhead	Distribution	Luminaire	LUM HPS RWY 50W	Active	50	65485-54003	S-14	CITY OF E PROVIDENCE
0006	000	2	LARCH	ST	4035	Overhead	Distribution	Luminaire	LUM HPS RWY 50W	Active	50	65485-54003	S-14	CITY OF E PROVIDENCE
0007	000	2	LARCH	ST	4035	Overhead	Distribution	Luminaire	LUM HPS RWY 50W	Active	50	65485-54003	S-14	CITY OF E PROVIDENCE
0002	000	2	LARCHMERE	DR	4040	Overhead	Distribution	Luminaire	LUM HPS RWY 50W	Active	50	65485-54003	S-14	CITY OF E PROVIDENCE
0004	000	2	LARCHMERE	DR	4040	Overhead	Distribution	Luminaire	LUM HPS RWY 50W	Active	50	65485-54003	S-14	CITY OF E PROVIDENCE
0006	000	2	LARCHMERE	DR	4040	Overhead	Distribution	Luminaire	LUM HPS RWY 50W	Active	50	65485-54003	S-14	CITY OF E PROVIDENCE
0008	000	2	LARCHMERE	DR	4040	Overhead	Distribution	Luminaire	LUM HPS RWY 50W	Active	50	65485-54003	S-14	CITY OF E PROVIDENCE
0001	000	2	LARCHWOOD	DR	4045	Overhead	Distribution	Luminaire	LUM HPS RWY 50W TT	Temp Turn Off	50	65485-54003	S-14	CITY OF E PROVIDENCE
0002	000	2	LARCHWOOD	DR	4045	Overhead	Distribution	Luminaire	LUM HPS RWY 50W	Active	50	65485-54003	S-14	CITY OF E PROVIDENCE
0003	000	2	LARCHWOOD	DR	4045	Overhead	Distribution	Luminaire	LUM HPS RWY 50W	Active	50	65485-54003	S-14	CITY OF E PROVIDENCE
0004	000	2	LARCHWOOD	DR	4045	Overhead	Distribution	Luminaire	LUM HPS RWY 50W TT	Temp Turn Off	50	65485-54003	S-14	CITY OF E PROVIDENCE
0005	000	2	LARCHWOOD	DR	4045	Overhead	Distribution	Luminaire	LUM HPS RWY 50W TT	Temp Turn Off	50	65485-54003	S-14	CITY OF E PROVIDENCE
0001	000	2	LAURA	ST	4055	Overhead	Distribution	Luminaire	LUM HPS RWY 50W	Active	50	65485-54003	S-14	CITY OF E PROVIDENCE
0002	000	2	LAURA	ST	4055	Overhead	Distribution	Luminaire	LUM HPS RWY 50W	Active	50	65485-54003	S-14	CITY OF E PROVIDENCE
0003	000	2	LAURA	ST	4055	Overhead	Distribution	Luminaire	LUM HPS RWY 50W TT	Temp Turn Off	50	65485-54003	S-14	CITY OF E PROVIDENCE
0008	000	2	LAURA	ST	4055	Overhead	Distribution	Luminaire	LUM HPS RWY 50W	Active	50	65485-54003	S-14	CITY OF E PROVIDENCE
0010	000	2	LAURA	ST	4055	Overhead	Distribution	Luminaire	LUM HPS RWY 50W	Active	50	65485-54003	S-14	CITY OF E PROVIDENCE
0001	000	2	LAWRENCE	DR	4060	Overhead	Distribution	Luminaire	LUM HPS RWY 50W	Active	50	65485-54003	S-14	CITY OF E PROVIDENCE
0002	000	2	LAWRENCE	DR	4060	Overhead	Distribution	Luminaire	LUM HPS RWY 50W	Active	50	65485-54003	S-14	CITY OF E PROVIDENCE
0004	000	2	LAWRENCE	DR	4060	Overhead	Distribution	Luminaire	LUM HPS RWY 50W	Active	50	65485-54003	S-14	CITY OF E PROVIDENCE
0006	000	2	LAWRENCE	DR	4060	Overhead	Distribution	Luminaire	LUM HPS RWY 50W	Active	50	65485-54003	S-14	CITY OF E PROVIDENCE
0007	000	2	LAWRENCE	DR	4060	Overhead	Distribution	Luminaire	LUM HPS RWY 50W	Active	50	65485-54003	S-14	CITY OF E PROVIDENCE
0000	050	2	LEAHY	ST	4065	Overhead	Distribution	Luminaire	LUM HPS RWY 50W	Active	50	65485-54003	S-14	CITY OF E PROVIDENCE
0002	000	2	LEAHY	ST	4065	Overhead	Distribution	Luminaire	LUM HPS RWY 50W	Active	50	65485-54003	S-14	CITY OF E PROVIDENCE
0004	000	2	LEAHY	ST	4065	Overhead	Distribution	Luminaire	LUM HPS RWY 50W	Active	50	65485-54003	S-14	CITY OF E PROVIDENCE
0001	000	0	LEE	RD	4068	Underground	Street Lighting	Pole	POLE METAL =>25FT	Active	0	90426-19008	S-14	CITY OF E PROVIDENCE
0001	000	2	LEE	RD	4068	Underground	Street Lighting	Luminaire	LUM HPS RWY 100W	Active	100	90426-19008	S-14	CITY OF E PROVIDENCE
0002	000	0	LEE	RD	4068	Underground	Street Lighting	Pole	POLE METAL =>25' TT	Temp Turn Off	0	90426-19008	S-14	CITY OF E PROVIDENCE
0002	000	2	LEE	RD	4068	Underground	Street Lighting	Luminaire	LUM HPS RWY 100W TT	Temp Turn Off	100	90426-19008	S-14	CITY OF E PROVIDENCE
0003	000	0	LEE	RD	4068	Underground	Street Lighting	Pole	POLE METAL =>25FT	Active	0	90426-19008	S-14	CITY OF E PROVIDENCE
0003	000	2	LEE	RD	4068	Underground	Street Lighting	Luminaire	LUM HPS RWY 100W	Active	100	90426-19008	S-14	CITY OF E PROVIDENCE
0004	000	0	LEE	RD	4068	Underground	Street Lighting	Pole	POLE METAL =>25FT	Active	0	90426-19008	S-14	CITY OF E PROVIDENCE
0004	000	2	LEE	RD	4068	Underground	Street Lighting	Luminaire	LUM HPS RWY 100W	Active	100	90426-19008	S-14	CITY OF E PROVIDENCE
0005	000	0	LEE	RD	4068	Underground	Street Lighting	Pole	POLE METAL =>25FT	Inactive	0	90426-19008	S-14	CITY OF E PROVIDENCE
0005	000	1	LEE	RD	4068	Underground	Street Lighting	Luminaire	LUM HPS RWY 100W	Inactive	100	90426-19008	S-14	CITY OF E PROVIDENCE
0002	000	2	LEGION	WAY	4070	Overhead	Distribution	Luminaire	LUM HPS RWY 50W	Active	50	65485-54003	S-14	CITY OF E PROVIDENCE
0003	000	2	LEGION	WAY	4070	Overhead	Distribution	Luminaire	LUM HPS RWY 50W	Active	50	65485-54003	S-14	CITY OF E PROVIDENCE
0005	000	2	LEGION	WAY	4070	Overhead	Distribution	Luminaire	LUM HPS RWY 50W	Active	50	65485-54003	S-14	CITY OF E PROVIDENCE
0006	000	2	LEGION	WAY	4070	Overhead	Distribution	Luminaire	LUM HPS RWY 50W	Active	50	65485-54003	S-14	CITY OF E PROVIDENCE
0007	000	2	LEGION	WAY	4070	Overhead	Distribution	Luminaire	LUM HPS RWY 50W	Active	50	65485-54003	S-14	CITY OF E PROVIDENCE
0008	000	2	LEGION	WAY	4070	Overhead	Distribution	Luminaire	LUM HPS RWY 50W	Active	50	65485-54003	S-14	CITY OF E PROVIDENCE
0010	000	1	LEGION	WAY	4070	Overhead	Distribution	Luminaire	LUM HPS RWY 50W	Active	50	65485-54003	S-14	CITY OF E PROVIDENCE
0011	000	1	LEGION	WAY	4070	Overhead	Distribution	Luminaire	LUM HPS RWY 50W	Active	50	65485-54003	S-14	CITY OF E PROVIDENCE

Pole No	Pole Suffix	Light Sequ No	Street Name	Street Suffix	Ngrid Line No	Source Type	Pole Use	Component Type	Bill Print and Tariff Description	Billing Status	Lamp Wattage	Account No	Rate	Customer Name
0012	000	1	LEGION	WAY	4070	Overhead	Distribution	Luminaire	LUM HPS RWY 50W	Active	50	65485-54003	S-14	CITY OF E PROVIDENCE
0012	001	2	LEGION	WAY	4070	Overhead	Distribution	Luminaire	LUM HPS FLD 400W	Active	400	90426-19008	S-14	CITY OF E PROVIDENCE
0013	000	2	LEGION	WAY	4070	Overhead	Distribution	Luminaire	LUM HPS RWY 50W	Active	50	65485-54003	S-14	CITY OF E PROVIDENCE
0014	000	2	LEGION	WAY	4070	Overhead	Distribution	Luminaire	LUM HPS RWY 50W	Active	50	65485-54003	S-14	CITY OF E PROVIDENCE
0015	000	2	LEGION	WAY	4070	Overhead	Distribution	Luminaire	LUM HPS RWY 50W	Active	50	65485-54003	S-14	CITY OF E PROVIDENCE
0001	000	2	LEIGH	LN	4073	Overhead	Distribution	Luminaire	LUM HPS RWY 50W	Active	50	90426-19008	S-14	CITY OF E PROVIDENCE
0004	000	2	LEIGH	LN	4073	Overhead	Distribution	Luminaire	LUM HPS RWY 50W	Active	50	90426-19008	S-14	CITY OF E PROVIDENCE
0005	000	2	LENA	ST	4075	Overhead	Distribution	Luminaire	LUM HPS RWY 50W TT	Temp Turn Off	50	65485-54003	S-14	CITY OF E PROVIDENCE
0006	000	2	LENA	ST	4075	Overhead	Distribution	Luminaire	LUM HPS RWY 50W	Active	50	65485-54003	S-14	CITY OF E PROVIDENCE
0007	000	2	LENA	ST	4075	Overhead	Distribution	Luminaire	LUM HPS RWY 50W TT	Temp Turn Off	50	65485-54003	S-14	CITY OF E PROVIDENCE
0009	000	2	LENA	ST	4075	Overhead	Distribution	Luminaire	LUM HPS RWY 50W TT	Temp Turn Off	50	65485-54003	S-14	CITY OF E PROVIDENCE
0011	000	2	LENA	ST	4075	Overhead	Distribution	Luminaire	LUM HPS RWY 50W	Active	50	65485-54003	S-14	CITY OF E PROVIDENCE
0012	000	2	LENA	ST	4075	Overhead	Distribution	Luminaire	LUM HPS RWY 50W TT	Temp Turn Off	50	65485-54003	S-14	CITY OF E PROVIDENCE
0013	000	2	LENA	ST	4075	Overhead	Distribution	Luminaire	LUM HPS RWY 50W	Active	50	65485-54003	S-14	CITY OF E PROVIDENCE
0002	000	1	LEONARD	AVE	4080	Overhead	Distribution	Luminaire	LUM HPS RWY 100W	Active	100	65485-54003	S-14	CITY OF E PROVIDENCE
0004	000	2	LEONARD	AVE	4080	Overhead	Distribution	Luminaire	LUM HPS RWY 50W	Active	50	65485-54003	S-14	CITY OF E PROVIDENCE
0006	000	2	LEONARD	AVE	4080	Overhead	Distribution	Luminaire	LUM HPS RWY 100W TT	Temp Turn Off	100	65485-54003	S-14	CITY OF E PROVIDENCE
0008	000	2	LEONARD	AVE	4080	Overhead	Distribution	Luminaire	LUM HPS RWY 50W	Active	50	65485-54003	S-14	CITY OF E PROVIDENCE
0009	000	2	LEONARD	AVE	4080	Overhead	Distribution	Luminaire	LUM HPS RWY 100W	Active	100	65485-54003	S-14	CITY OF E PROVIDENCE
0011	000	2	LEONARD	AVE	4080	Overhead	Distribution	Luminaire	LUM HPS RWY 50W	Active	50	65485-54003	S-14	CITY OF E PROVIDENCE
0012	000	2	LEONARD	AVE	4080	Overhead	Distribution	Luminaire	LUM HPS RWY 100W TT	Temp Turn Off	100	65485-54003	S-14	CITY OF E PROVIDENCE
0014	000	1	LEONARD	AVE	4080	Overhead	Distribution	Luminaire	LUM HPS RWY 100W	Active	100	65485-54003	S-14	CITY OF E PROVIDENCE
0016	000	2	LEONARD	AVE	4080	Overhead	Distribution	Luminaire	LUM HPS RWY 50W	Active	50	65485-54003	S-14	CITY OF E PROVIDENCE
0018	000	2	LEONARD	AVE	4080	Overhead	Distribution	Luminaire	LUM HPS RWY 50W	Active	50	65485-54003	S-14	CITY OF E PROVIDENCE
0020	000	1	LEONARD	AVE	4080	Overhead	Distribution	Luminaire	LUM HPS RWY 50W	Active	50	65485-54003	S-14	CITY OF E PROVIDENCE
0021	000	2	LEONARD	AVE	4080	Overhead	Distribution	Luminaire	LUM HPS RWY 50W TT	Temp Turn Off	50	65485-54003	S-14	CITY OF E PROVIDENCE
0002	000	2	LEROY	DR	4085	Overhead	Distribution	Luminaire	LUM HPS RWY 50W	Active	50	65485-54003	S-14	CITY OF E PROVIDENCE
0003	000	2	LEROY	DR	4085	Overhead	Distribution	Luminaire	LUM HPS RWY 50W	Active	50	65485-54003	S-14	CITY OF E PROVIDENCE
0005	000	2	LEROY	DR	4085	Overhead	Distribution	Luminaire	LUM HPS RWY 50W	Active	50	65485-54003	S-14	CITY OF E PROVIDENCE
0007	000	2	LEROY	DR	4085	Overhead	Distribution	Luminaire	LUM HPS RWY 50W	Active	50	65485-54003	S-14	CITY OF E PROVIDENCE
0009	000	2	LEROY	DR	4085	Overhead	Distribution	Luminaire	LUM HPS RWY 50W	Active	50	65485-54003	S-14	CITY OF E PROVIDENCE
0011	000	2	LEROY	DR	4085	Overhead	Distribution	Luminaire	LUM HPS RWY 50W	Active	50	65485-54003	S-14	CITY OF E PROVIDENCE
0013	000	2	LEROY	DR	4085	Overhead	Distribution	Luminaire	LUM HPS RWY 50W	Active	50	65485-54003	S-14	CITY OF E PROVIDENCE
0014	000	2	LEROY	DR	4085	Overhead	Distribution	Luminaire	LUM HPS RWY 50W	Active	50	65485-54003	S-14	CITY OF E PROVIDENCE
0015	000	2	LEROY	DR	4085	Overhead	Distribution	Luminaire	LUM HPS RWY 50W	Active	50	65485-54003	S-14	CITY OF E PROVIDENCE
0001	000	2	LESTER	ST	4090	Overhead	Distribution	Luminaire	LUM HPS RWY 50W	Active	50	65485-54003	S-14	CITY OF E PROVIDENCE
0003	000	2	LESTER	ST	4090	Overhead	Distribution	Luminaire	LUM HPS RWY 50W	Active	50	65485-54003	S-14	CITY OF E PROVIDENCE
0004	000	2	LESTER	ST	4090	Overhead	Distribution	Luminaire	LUM HPS RWY 50W	Active	50	65485-54003	S-14	CITY OF E PROVIDENCE
0005	000	2	LESTER	ST	4090	Overhead	Distribution	Luminaire	LUM HPS RWY 50W TT	Temp Turn Off	50	65485-54003	S-14	CITY OF E PROVIDENCE
0001	000	2	LEWIS	ST	4095	Overhead	Distribution	Luminaire	LUM HPS RWY 50W TT	Temp Turn Off	50	65485-54003	S-14	CITY OF E PROVIDENCE
0002	000	2	LEWIS	ST	4095	Overhead	Distribution	Luminaire	LUM HPS RWY 50W TT	Temp Turn Off	50	65485-54003	S-14	CITY OF E PROVIDENCE
0002	000	2	LILAC	ST	4105	Overhead	Distribution	Luminaire	LUM HPS RWY 50W	Active	50	65485-54003	S-14	CITY OF E PROVIDENCE
0001	000	2	LILLIAN	AVE	4110	Overhead	Distribution	Luminaire	LUM HPS RWY 50W	Active	50	65485-54003	S-14	CITY OF E PROVIDENCE
0003	000	2	LILLIAN	AVE	4110	Overhead	Distribution	Luminaire	LUM HPS RWY 50W	Active	50	65485-54003	S-14	CITY OF E PROVIDENCE
0004	000	2	LILLIAN	AVE	4110	Overhead	Distribution	Luminaire	LUM HPS RWY 50W TT	Temp Turn Off	50	65485-54003	S-14	CITY OF E PROVIDENCE
0005	000	2	LILLIAN	AVE	4110	Overhead	Distribution	Luminaire	LUM HPS RWY 50W	Active	50	65485-54003	S-14	CITY OF E PROVIDENCE
0001	000	1	LINCOLN	AVE	4115	Overhead	Distribution	Luminaire	LUM HPS RWY 50W	Active	50	65485-54003	S-14	CITY OF E PROVIDENCE
0003	000	2	LINCOLN	AVE	4115	Overhead	Distribution	Luminaire	LUM HPS RWY 100W TT	Temp Turn Off	100	65485-54003	S-14	CITY OF E PROVIDENCE
0005	000	1	LINCOLN	AVE	4115	Overhead	Distribution	Luminaire	LUM HPS RWY 50W	Active	50	65485-54003	S-14	CITY OF E PROVIDENCE
0008	000	2	LINCOLN	AVE	4115	Overhead	Distribution	Luminaire	LUM HPS RWY 50W	Active	50	65485-54003	S-14	CITY OF E PROVIDENCE
0010	000	2	LINCOLN	AVE	4115	Overhead	Distribution	Luminaire	LUM HPS RWY 50W TT	Temp Turn Off	50	65485-54003	S-14	CITY OF E PROVIDENCE
0011	000	2	LINCOLN	AVE	4115	Overhead	Distribution	Luminaire	LUM HPS RWY 50W	Active	50	65485-54003	S-14	CITY OF E PROVIDENCE
0012	000	2	LINCOLN	AVE	4115	Overhead	Distribution	Luminaire	LUM HPS RWY 50W	Active	50	65485-54003	S-14	CITY OF E PROVIDENCE
0001	000	2	LINDEN	AVE	4125	Overhead	Distribution	Luminaire	LUM HPS RWY 50W	Active	50	65485-54003	S-14	CITY OF E PROVIDENCE
0003	000	2	LINDEN	AVE	4125	Overhead	Distribution	Luminaire	LUM HPS RWY 50W TT	Temp Turn Off	50	65485-54003	S-14	CITY OF E PROVIDENCE

Pole No	Pole Suffix	Light Sequ No	Street Name	Street Suffix	Ngrid Line No	Source Type	Pole Use	Component Type	Bill Print and Tariff Description	Billing Status	Lamp Wattage	Account No	Rate	Customer Name
0004	000	2	LINDEN	AVE	4125	Overhead	Distribution	Luminaire	LUM HPS RWY 50W TT	Temp Turn Off	50	65485-54003	S-14	CITY OF E PROVIDENCE
0001	000	2	LINDY	AVE	4130	Overhead	Distribution	Luminaire	LUM HPS RWY 50W	Active	50	65485-54003	S-14	CITY OF E PROVIDENCE
0003	000	2	LINDY	AVE	4130	Overhead	Distribution	Luminaire	LUM HPS RWY 50W	Active	50	65485-54003	S-14	CITY OF E PROVIDENCE
0005	000	2	LINDY	AVE	4130	Overhead	Distribution	Luminaire	LUM HPS RWY 50W	Active	50	65485-54003	S-14	CITY OF E PROVIDENCE
0007	000	2	LINDY	AVE	4130	Overhead	Distribution	Luminaire	LUM HPS RWY 50W	Active	50	65485-54003	S-14	CITY OF E PROVIDENCE
0008	000	2	LINDY	AVE	4130	Overhead	Distribution	Luminaire	LUM HPS RWY 50W TT	Temp Turn Off	50	65485-54003	S-14	CITY OF E PROVIDENCE
0009	000	2	LINDY	AVE	4130	Overhead	Distribution	Luminaire	LUM HPS RWY 50W	Active	50	65485-54003	S-14	CITY OF E PROVIDENCE
0011	000	2	LINDY	AVE	4130	Overhead	Distribution	Luminaire	LUM HPS RWY 50W	Active	50	65485-54003	S-14	CITY OF E PROVIDENCE
0012	000	1	LINDY	AVE	4130	Overhead	Distribution	Luminaire	LUM HPS RWY 100W	Active	100	65485-54003	S-14	CITY OF E PROVIDENCE
0002	000	2	LITTLE	ST	4135	Overhead	Distribution	Luminaire	LUM HPS RWY 50W	Active	50	65485-54003	S-14	CITY OF E PROVIDENCE
0000	050	2	LOCUST	ST	4140	Overhead	Distribution	Luminaire	LUM HPS RWY 50W	Active	50	65485-54003	S-14	CITY OF E PROVIDENCE
0001	000	2	LOCUST	ST	4140	Overhead	Distribution	Luminaire	LUM HPS RWY 50W TT	Temp Turn Off	50	65485-54003	S-14	CITY OF E PROVIDENCE
0002	000	2	LOCUST	ST	4140	Overhead	Distribution	Luminaire	LUM HPS RWY 50W	Active	50	65485-54003	S-14	CITY OF E PROVIDENCE
0003	000	2	LOCUST	ST	4140	Overhead	Distribution	Luminaire	LUM HPS RWY 50W	Active	50	65485-54003	S-14	CITY OF E PROVIDENCE
0006	000	2	LOCUST	ST	4140	Overhead	Distribution	Luminaire	LUM HPS RWY 50W	Active	50	65485-54003	S-14	CITY OF E PROVIDENCE
0007	000	2	LOCUST	ST	4140	Overhead	Distribution	Luminaire	LUM HPS RWY 50W TT	Temp Turn Off	50	65485-54003	S-14	CITY OF E PROVIDENCE
0001	000	2	LOTTIE	DR	4145	Overhead	Distribution	Luminaire	LUM HPS RWY 50W	Active	50	65485-54003	S-14	CITY OF E PROVIDENCE
0005	000	2	LOTTIE	DR	4145	Overhead	Distribution	Luminaire	LUM HPS RWY 50W	Active	50	65485-54003	S-14	CITY OF E PROVIDENCE
0001	000	2	LOUISE	AVE	4150	Overhead	Distribution	Luminaire	LUM HPS RWY 50W TT	Temp Turn Off	50	65485-54003	S-14	CITY OF E PROVIDENCE
0001	000	2	LOWELL	DR	4160	Overhead	Distribution	Luminaire	LUM HPS RWY 50W	Active	50	65485-54003	S-14	CITY OF E PROVIDENCE
0002	000	2	LOWELL	DR	4160	Overhead	Distribution	Luminaire	LUM HPS RWY 50W	Active	50	90426-19008	S-14	CITY OF E PROVIDENCE
0001	000	2	LUNN	ST	4165	Overhead	Distribution	Luminaire	LUM HPS RWY 50W	Active	50	65485-54003	S-14	CITY OF E PROVIDENCE
0003	000	2	LUNN	ST	4165	Overhead	Distribution	Luminaire	LUM HPS RWY 50W	Active	50	65485-54003	S-14	CITY OF E PROVIDENCE
0004	000	2	LUNN	ST	4165	Overhead	Distribution	Luminaire	LUM HPS RWY 50W	Active	50	65485-54003	S-14	CITY OF E PROVIDENCE
0002	000	2	LURAY	ST	4170	Overhead	Distribution	Luminaire	LUM HPS RWY 50W	Active	50	65485-54003	S-14	CITY OF E PROVIDENCE
0004	000	2	LURAY	ST	4170	Overhead	Distribution	Luminaire	LUM HPS RWY 50W	Active	50	65485-54003	S-14	CITY OF E PROVIDENCE
0001	000	2	LUTHER	AVE	4175	Overhead	Distribution	Luminaire	LUM HPS RWY 50W TT	Temp Turn Off	50	65485-54003	S-14	CITY OF E PROVIDENCE
0002	000	2	LUTHER	AVE	4175	Overhead	Distribution	Luminaire	LUM HPS RWY 50W	Active	50	65485-54003	S-14	CITY OF E PROVIDENCE
0003	000	2	LYMAN	ST	4180	Overhead	Distribution	Luminaire	LUM HPS RWY 50W	Active	50	65485-54003	S-14	CITY OF E PROVIDENCE
0001	000	2	LYNN	AVE	4185	Overhead	Distribution	Luminaire	LUM HPS RWY 50W	Active	50	65485-54003	S-14	CITY OF E PROVIDENCE
0002	000	2	LYNN	AVE	4185	Overhead	Distribution	Luminaire	LUM HPS RWY 50W TT	Temp Turn Off	50	65485-54003	S-14	CITY OF E PROVIDENCE
0003	000	2	LYNN	AVE	4185	Overhead	Distribution	Luminaire	LUM HPS RWY 50W	Active	50	65485-54003	S-14	CITY OF E PROVIDENCE
0004	000	2	LYNN	AVE	4185	Overhead	Distribution	Luminaire	LUM HPS RWY 50W TT	Temp Turn Off	50	65485-54003	S-14	CITY OF E PROVIDENCE
0005	000	2	LYNN	AVE	4185	Overhead	Distribution	Luminaire	LUM HPS RWY 50W	Active	50	65485-54003	S-14	CITY OF E PROVIDENCE
0001	000	2	LYON	AVE	4190	Overhead	Distribution	Luminaire	LUM HPS RWY 50W TT	Temp Turn Off	50	65485-54003	S-14	CITY OF E PROVIDENCE
0002	000	2	LYON	AVE	4190	Overhead	Distribution	Luminaire	LUM HPS RWY 50W	Active	50	65485-54003	S-14	CITY OF E PROVIDENCE
0004	000	2	LYON	AVE	4190	Overhead	Distribution	Luminaire	LUM HPS RWY 50W	Active	50	65485-54003	S-14	CITY OF E PROVIDENCE
0006	000	2	LYON	AVE	4190	Overhead	Distribution	Luminaire	LUM HPS RWY 100W	Active	100	65485-54003	S-14	CITY OF E PROVIDENCE
0007	000	2	LYON	AVE	4190	Overhead	Distribution	Luminaire	LUM HPS RWY 50W TT	Temp Turn Off	50	65485-54003	S-14	CITY OF E PROVIDENCE
0007	054	1	LYON	AVE	4190	Overhead	Distribution	Luminaire	LUM HPS RWY 50W	Active	50	65485-54003	S-14	CITY OF E PROVIDENCE
0008	000	2	LYON	AVE	4190	Overhead	Distribution	Luminaire	LUM HPS RWY 100W	Active	100	65485-54003	S-14	CITY OF E PROVIDENCE
0010	000	2	LYON	AVE	4190	Overhead	Distribution	Luminaire	LUM HPS RWY 100W	Active	100	65485-54003	S-14	CITY OF E PROVIDENCE
0011	000	2	LYON	AVE	4190	Overhead	Distribution	Luminaire	LUM HPS RWY 100W TT	Temp Turn Off	100	65485-54003	S-14	CITY OF E PROVIDENCE
0012	000	2	LYON	AVE	4190	Overhead	Distribution	Luminaire	LUM HPS RWY 100W	Active	100	65485-54003	S-14	CITY OF E PROVIDENCE
0014	000	2	LYON	AVE	4190	Overhead	Distribution	Luminaire	LUM HPS RWY 100W	Active	100	65485-54003	S-14	CITY OF E PROVIDENCE
0016	000	2	LYON	AVE	4190	Overhead	Distribution	Luminaire	LUM HPS RWY 50W	Active	50	65485-54003	S-14	CITY OF E PROVIDENCE
0018	000	2	LYON	AVE	4190	Overhead	Distribution	Luminaire	LUM HPS RWY 100W TT	Temp Turn Off	100	65485-54003	S-14	CITY OF E PROVIDENCE
0019	000	1	LYON	AVE	4190	Overhead	Distribution	Luminaire	LUM HPS RWY 50W	Active	50	65485-54003	S-14	CITY OF E PROVIDENCE
0027	000	2	LYON	AVE	4190	Overhead	Distribution	Luminaire	LUM HPS RWY 100W	Active	100	65485-54003	S-14	CITY OF E PROVIDENCE
0028	000	2	LYON	AVE	4190	Overhead	Distribution	Luminaire	LUM HPS RWY 100W	Active	100	65485-54003	S-14	CITY OF E PROVIDENCE
0030	000	1	LYON	AVE	4190	Overhead	Distribution	Luminaire	LUM HPS RWY 50W	Active	50	65485-54003	S-14	CITY OF E PROVIDENCE
0032	000	2	LYON	AVE	4190	Overhead	Distribution	Luminaire	LUM HPS RWY 100W	Active	100	65485-54003	S-14	CITY OF E PROVIDENCE
0034	000	2	LYON	AVE	4190	Overhead	Distribution	Luminaire	LUM HPS RWY 100W	Active	100	65485-54003	S-14	CITY OF E PROVIDENCE
0036	000	2	LYON	AVE	4190	Overhead	Distribution	Luminaire	LUM HPS RWY 100W	Active	100	65485-54003	S-14	CITY OF E PROVIDENCE
0040	000	2	LYON	AVE	4190	Overhead	Distribution	Luminaire	LUM HPS RWY 100W	Active	100	65485-54003	S-14	CITY OF E PROVIDENCE

Pole No	Pole Suffix	Light Sequ No	Street Name	Street Suffix	Ngrid Line No	Source Type	Pole Use	Component Type	Bill Print and Tariff Description	Billing Status	Lamp Wattage	Account No	Rate	Customer Name
0042	000	2	LYON	AVE	4190	Overhead	Distribution	Luminaire	LUM HPS RWY 100W	Active	100	65485-54003	S-14	CITY OF E PROVIDENCE
0044	000	2	LYON	AVE	4190	Overhead	Distribution	Luminaire	LUM HPS RWY 100W TT	Temp Turn Off	100	65485-54003	S-14	CITY OF E PROVIDENCE
0045	000	2	LYON	AVE	4190	Overhead	Distribution	Luminaire	LUM HPS RWY 100W	Active	100	65485-54003	S-14	CITY OF E PROVIDENCE
0001	000	2	MADELINE	DR	4195	Overhead	Distribution	Luminaire	LUM HPS RWY 50W	Active	50	65485-54003	S-14	CITY OF E PROVIDENCE
0002	000	2	MADELINE	DR	4195	Overhead	Distribution	Luminaire	LUM HPS RWY 50W TT	Temp Turn Off	50	65485-54003	S-14	CITY OF E PROVIDENCE
0003	000	2	MADELINE	DR	4195	Overhead	Distribution	Luminaire	LUM HPS RWY 50W	Active	50	65485-54003	S-14	CITY OF E PROVIDENCE
0005	000	2	MADELINE	DR	4195	Overhead	Distribution	Luminaire	LUM HPS RWY 50W	Active	50	65485-54003	S-14	CITY OF E PROVIDENCE
0007	000	2	MADELINE	DR	4195	Overhead	Distribution	Luminaire	LUM HPS RWY 50W TT	Temp Turn Off	50	65485-54003	S-14	CITY OF E PROVIDENCE
0008	000	2	MADELINE	DR	4195	Overhead	Distribution	Luminaire	LUM HPS RWY 50W	Active	50	65485-54003	S-14	CITY OF E PROVIDENCE
0009	000	2	MADELINE	DR	4195	Overhead	Distribution	Luminaire	LUM HPS RWY 50W TT	Temp Turn Off	50	65485-54003	S-14	CITY OF E PROVIDENCE
0002	000	2	MAGNOLIA	ST	4205	Overhead	Distribution	Luminaire	LUM HPS RWY 50W	Active	50	65485-54003	S-14	CITY OF E PROVIDENCE
0003	000	2	MAGNOLIA	ST	4205	Overhead	Distribution	Luminaire	LUM HPS RWY 50W	Active	50	65485-54003	S-14	CITY OF E PROVIDENCE
0004	000	2	MAGNOLIA	ST	4205	Overhead	Distribution	Luminaire	LUM HPS RWY 50W	Active	50	65485-54003	S-14	CITY OF E PROVIDENCE
0006	000	2	MAGNOLIA	ST	4205	Overhead	Distribution	Luminaire	LUM HPS RWY 50W	Active	50	65485-54003	S-14	CITY OF E PROVIDENCE
0008	000	2	MAGNOLIA	ST	4205	Overhead	Distribution	Luminaire	LUM HPS RWY 50W	Active	50	65485-54003	S-14	CITY OF E PROVIDENCE
0009	000	2	MAGNOLIA	ST	4205	Overhead	Distribution	Luminaire	LUM HPS RWY 50W	Active	50	65485-54003	S-14	CITY OF E PROVIDENCE
0010	000	2	MAGNOLIA	ST	4205	Overhead	Distribution	Luminaire	LUM HPS RWY 50W	Active	50	65485-54003	S-14	CITY OF E PROVIDENCE
0001	000	2	MAIN	ST	4210	Overhead	Distribution	Luminaire	LUM HPS RWY 50W TT	Temp Turn Off	50	65485-54003	S-14	CITY OF E PROVIDENCE
0003	000	2	MAIN	ST	4210	Overhead	Distribution	Luminaire	LUM HPS RWY 50W	Active	50	65485-54003	S-14	CITY OF E PROVIDENCE
0005	000	2	MAIN	ST	4210	Overhead	Distribution	Luminaire	LUM HPS RWY 50W	Active	50	65485-54003	S-14	CITY OF E PROVIDENCE
0007	000	2	MAIN	ST	4210	Overhead	Distribution	Luminaire	LUM HPS RWY 50W	Active	50	65485-54003	S-14	CITY OF E PROVIDENCE
0009	000	2	MAIN	ST	4210	Overhead	Distribution	Luminaire	LUM HPS RWY 50W	Active	50	65485-54003	S-14	CITY OF E PROVIDENCE
0010	000	2	MAIN	ST	4210	Overhead	Distribution	Luminaire	LUM HPS RWY 50W	Active	50	65485-54003	S-14	CITY OF E PROVIDENCE
0011	000	2	MAIN	ST	4210	Overhead	Distribution	Luminaire	LUM HPS RWY 50W	Active	50	65485-54003	S-14	CITY OF E PROVIDENCE
0012	050	2	MAIN	ST	4210	Overhead	Distribution	Luminaire	LUM HPS RWY 250W	Active	250	65485-54003	S-14	CITY OF E PROVIDENCE
0001	000	2	MANNING	DR	4220	Overhead	Distribution	Luminaire	LUM HPS RWY 50W	Active	50	65485-54003	S-14	CITY OF E PROVIDENCE
0003	000	2	MANNING	DR	4220	Overhead	Distribution	Luminaire	LUM HPS RWY 50W	Active	50	65485-54003	S-14	CITY OF E PROVIDENCE
0005	000	2	MANNING	DR	4220	Overhead	Distribution	Luminaire	LUM HPS RWY 50W	Active	50	65485-54003	S-14	CITY OF E PROVIDENCE
0007	000	2	MANNING	DR	4220	Overhead	Distribution	Luminaire	LUM HPS RWY 50W	Active	50	65485-54003	S-14	CITY OF E PROVIDENCE
0001	000	2	MAPLE	AVE	4225	Overhead	Distribution	Luminaire	LUM HPS RWY 50W	Active	50	65485-54003	S-14	CITY OF E PROVIDENCE
0002	000	2	MAPLE	AVE	4225	Overhead	Distribution	Luminaire	LUM HPS RWY 50W	Active	50	65485-54003	S-14	CITY OF E PROVIDENCE
0004	000	2	MAPLE	AVE	4225	Overhead	Distribution	Luminaire	LUM HPS RWY 50W	Active	50	65485-54003	S-14	CITY OF E PROVIDENCE
0006	000	2	MAPLE	AVE	4225	Overhead	Distribution	Luminaire	LUM HPS RWY 50W	Active	50	65485-54003	S-14	CITY OF E PROVIDENCE
0008	000	2	MAPLE	AVE	4225	Overhead	Distribution	Luminaire	LUM HPS RWY 50W	Active	50	65485-54003	S-14	CITY OF E PROVIDENCE
0010	000	2	MAPLE	AVE	4225	Overhead	Distribution	Luminaire	LUM HPS RWY 50W	Active	50	65485-54003	S-14	CITY OF E PROVIDENCE
0011	000	2	MAPLE	AVE	4225	Overhead	Distribution	Luminaire	LUM HPS RWY 50W	Active	50	65485-54003	S-14	CITY OF E PROVIDENCE
0013	000	2	MAPLE	AVE	4225	Overhead	Distribution	Luminaire	LUM HPS RWY 50W TT	Temp Turn Off	50	65485-54003	S-14	CITY OF E PROVIDENCE
0015	000	2	MAPLE	AVE	4225	Overhead	Distribution	Luminaire	LUM HPS RWY 50W	Active	50	65485-54003	S-14	CITY OF E PROVIDENCE
0001	000	2	MAPLEWOOD	ST	4230	Overhead	Distribution	Luminaire	LUM HPS RWY 50W	Active	50	65485-54003	S-14	CITY OF E PROVIDENCE
0002	000	2	MAPLEWOOD	ST	4230	Overhead	Distribution	Luminaire	LUM HPS RWY 50W TT	Temp Turn Off	50	65485-54003	S-14	CITY OF E PROVIDENCE
0003	000	2	MAPLEWOOD	ST	4230	Overhead	Distribution	Luminaire	LUM HPS RWY 50W	Active	50	65485-54003	S-14	CITY OF E PROVIDENCE
0001	000	2	MARGARET	AVE	4235	Overhead	Distribution	Luminaire	LUM HPS RWY 50W	Active	50	65485-54003	S-14	CITY OF E PROVIDENCE
0001	000	2	MARIETTA	ST	4240	Overhead	Distribution	Luminaire	LUM HPS RWY 50W	Active	50	65485-54003	S-14	CITY OF E PROVIDENCE
0003	000	2	MARIETTA	ST	4240	Overhead	Distribution	Luminaire	LUM HPS RWY 50W	Active	50	65485-54003	S-14	CITY OF E PROVIDENCE
0005	000	2	MARIETTA	ST	4240	Overhead	Distribution	Luminaire	LUM HPS RWY 50W	Active	50	65485-54003	S-14	CITY OF E PROVIDENCE
0000	050	2	MARSH	ST	4250	Overhead	Distribution	Luminaire	LUM HPS RWY 50W	Active	50	65485-54003	S-14	CITY OF E PROVIDENCE
0001	000	2	MARSH	ST	4250	Overhead	Distribution	Luminaire	LUM HPS RWY 50W TT	Temp Turn Off	50	65485-54003	S-14	CITY OF E PROVIDENCE
0002	000	2	MARSH	ST	4250	Overhead	Distribution	Luminaire	LUM HPS RWY 50W	Active	50	65485-54003	S-14	CITY OF E PROVIDENCE
0003	000	2	MARSH	ST	4250	Overhead	Distribution	Luminaire	LUM HPS RWY 50W	Active	50	65485-54003	S-14	CITY OF E PROVIDENCE
0001	000	2	MARSHALL	WAY	4255	Overhead	Distribution	Luminaire	LUM HPS RWY 50W	Active	50	65485-54003	S-14	CITY OF E PROVIDENCE
0003	000	2	MARSHALL	WAY	4255	Overhead	Distribution	Luminaire	LUM HPS RWY 50W	Active	50	65485-54003	S-14	CITY OF E PROVIDENCE
0002	000	2	MARTELLO	ST	4260	Overhead	Distribution	Luminaire	LUM HPS RWY 50W	Active	50	65485-54003	S-14	CITY OF E PROVIDENCE
0004	000	2	MARTELLO	ST	4260	Overhead	Distribution	Luminaire	LUM HPS RWY 50W	Active	50	65485-54003	S-14	CITY OF E PROVIDENCE
0005	000	2	MARTELLO	ST	4260	Overhead	Distribution	Luminaire	LUM HPS RWY 50W TT	Temp Turn Off	50	65485-54003	S-14	CITY OF E PROVIDENCE
0006	000	2	MARTELLO	ST	4260	Overhead	Distribution	Luminaire	LUM HPS RWY 50W	Active	50	65485-54003	S-14	CITY OF E PROVIDENCE

Pole No	Pole Suffix	Light Sequ No	Street Name	Street Suffix	Ngrid Line No	Source Type	Pole Use	Component Type	Bill Print and Tariff Description	Billing Status	Lamp Wattage	Account No	Rate	Customer Name
0007	000	2	MARTELLO	ST	4260	Overhead	Distribution	Luminaire	LUM HPS RWY 50W	Active	50	65485-54003	S-14	CITY OF E PROVIDENCE
0001	000	2	MARTHA	RD	4265	Overhead	Distribution	Luminaire	LUM HPS RWY 50W	Active	50	65485-54003	S-14	CITY OF E PROVIDENCE
0003	000	2	MARTHA	RD	4265	Overhead	Distribution	Luminaire	LUM HPS RWY 50W	Active	50	65485-54003	S-14	CITY OF E PROVIDENCE
0005	000	2	MARTHA	RD	4265	Overhead	Distribution	Luminaire	LUM HPS RWY 50W	Active	50	65485-54003	S-14	CITY OF E PROVIDENCE
0007	000	2	MARTHA	RD	4265	Overhead	Distribution	Luminaire	LUM HPS RWY 50W	Active	50	65485-54003	S-14	CITY OF E PROVIDENCE
0001	000	2	MARTIN	ST	4270	Overhead	Distribution	Luminaire	LUM HPS RWY 100W	Active	100	65485-54003	S-14	CITY OF E PROVIDENCE
0002	000	2	MARTIN	ST	4270	Overhead	Distribution	Luminaire	LUM HPS RWY 100W TT	Temp Turn Off	100	65485-54003	S-14	CITY OF E PROVIDENCE
0004	000	1	MARTIN	ST	4270	Overhead	Distribution	Luminaire	LUM HPS RWY 50W	Active	50	65485-54003	S-14	CITY OF E PROVIDENCE
0006	000	2	MARTIN	ST	4270	Overhead	Distribution	Luminaire	LUM HPS RWY 100W TT	Temp Turn Off	100	65485-54003	S-14	CITY OF E PROVIDENCE
0007	000	1	MARTIN	ST	4270	Overhead	Distribution	Luminaire	LUM HPS RWY 50W	Active	50	65485-54003	S-14	CITY OF E PROVIDENCE
0008	000	1	MARTIN	ST	4270	Overhead	Distribution	Luminaire	LUM HPS RWY 50W	Active	50	65485-54003	S-14	CITY OF E PROVIDENCE
0010	000	1	MARTIN	ST	4270	Overhead	Distribution	Luminaire	LUM HPS RWY 50W	Active	50	65485-54003	S-14	CITY OF E PROVIDENCE
0012	000	1	MARTIN	ST	4270	Overhead	Distribution	Luminaire	LUM HPS RWY 50W	Active	50	65485-54003	S-14	CITY OF E PROVIDENCE
0014	000	1	MARTIN	ST	4270	Overhead	Distribution	Luminaire	LUM HPS RWY 50W	Active	50	65485-54003	S-14	CITY OF E PROVIDENCE
0016	000	1	MARTIN	ST	4270	Overhead	Distribution	Luminaire	LUM HPS RWY 50W	Active	50	65485-54003	S-14	CITY OF E PROVIDENCE
0018	000	1	MARTIN	ST	4270	Overhead	Distribution	Luminaire	LUM HPS RWY 50W	Active	50	65485-54003	S-14	CITY OF E PROVIDENCE
0020	000	1	MARTIN	ST	4270	Overhead	Distribution	Luminaire	LUM HPS RWY 50W	Active	50	65485-54003	S-14	CITY OF E PROVIDENCE
0022	000	1	MARTIN	ST	4270	Overhead	Distribution	Luminaire	LUM HPS RWY 50W	Active	50	65485-54003	S-14	CITY OF E PROVIDENCE
0024	000	2	MARTIN	ST	4270	Overhead	Distribution	Luminaire	LUM HPS RWY 100W	Active	100	65485-54003	S-14	CITY OF E PROVIDENCE
0026	000	1	MARTIN	ST	4270	Overhead	Distribution	Luminaire	LUM HPS RWY 50W	Active	50	65485-54003	S-14	CITY OF E PROVIDENCE
0028	000	1	MARTIN	ST	4270	Overhead	Distribution	Luminaire	LUM HPS RWY 50W	Active	50	65485-54003	S-14	CITY OF E PROVIDENCE
0030	000	2	MARTIN	ST	4270	Overhead	Distribution	Luminaire	LUM HPS RWY 100W TT	Temp Turn Off	100	65485-54003	S-14	CITY OF E PROVIDENCE
0002	000	2	MARY	AVE	4275	Overhead	Distribution	Luminaire	LUM HPS RWY 50W	Active	50	65485-54003	S-14	CITY OF E PROVIDENCE
0004	000	2	MARY	AVE	4275	Overhead	Distribution	Luminaire	LUM HPS RWY 50W	Active	50	65485-54003	S-14	CITY OF E PROVIDENCE
0005	050	2	MARY	AVE	4275	Overhead	Distribution	Luminaire	LUM HPS RWY 50W	Active	50	65485-54003	S-14	CITY OF E PROVIDENCE
0007	000	2	MARY	AVE	4275	Overhead	Distribution	Luminaire	LUM HPS RWY 50W	Active	50	65485-54003	S-14	CITY OF E PROVIDENCE
0009	000	2	MARY	AVE	4275	Overhead	Distribution	Luminaire	LUM HPS RWY 50W	Active	50	65485-54003	S-14	CITY OF E PROVIDENCE
0001	000	2	MASON	ST	4280	Overhead	Distribution	Luminaire	LUM HPS RWY 50W	Active	50	65485-54003	S-14	CITY OF E PROVIDENCE
0002	000	2	MASON	ST	4280	Overhead	Distribution	Luminaire	LUM HPS RWY 50W	Active	50	65485-54003	S-14	CITY OF E PROVIDENCE
0003	000	2	MASON	ST	4280	Overhead	Distribution	Luminaire	LUM HPS RWY 50W	Active	50	65485-54003	S-14	CITY OF E PROVIDENCE
0004	000	2	MASON	ST	4280	Overhead	Distribution	Luminaire	LUM HPS RWY 50W	Active	50	65485-54003	S-14	CITY OF E PROVIDENCE
0001	000	1	MASSASOIT	AVE	4285	Overhead	Distribution	Luminaire	LUM HPS RWY 100W	Active	100	65485-54003	S-14	CITY OF E PROVIDENCE
0002	050	1	MASSASOIT	AVE	4285	Overhead	Distribution	Luminaire	LUM HPS RWY 100W	Active	100	65485-54003	S-14	CITY OF E PROVIDENCE
0004	000	1	MASSASOIT	AVE	4285	Overhead	Distribution	Luminaire	LUM HPS RWY 100W	Active	100	65485-54003	S-14	CITY OF E PROVIDENCE
0006	084	1	MASSASOIT	AVE	4285	Overhead	Distribution	Luminaire	LUM HPS RWY 100W	Active	100	65485-54003	S-14	CITY OF E PROVIDENCE
0007	000	2	MASSASOIT	AVE	4285	Overhead	Distribution	Luminaire	LUM HPS RWY 250W TT	Temp Turn Off	250	65485-54003	S-14	CITY OF E PROVIDENCE
0009	084	1	MASSASOIT	AVE	4285	Overhead	Distribution	Luminaire	LUM HPS RWY 100W	Active	100	65485-54003	S-14	CITY OF E PROVIDENCE
0010	000	1	MASSASOIT	AVE	4285	Overhead	Distribution	Luminaire	LUM HPS RWY 100W	Active	100	65485-54003	S-14	CITY OF E PROVIDENCE
0011	000	1	MASSASOIT	AVE	4285	Overhead	Distribution	Luminaire	LUM HPS RWY 100W	Active	100	65485-54003	S-14	CITY OF E PROVIDENCE
0013	000	2	MASSASOIT	AVE	4285	Overhead	Distribution	Luminaire	LUM HPS RWY 250W TT	Temp Turn Off	250	65485-54003	S-14	CITY OF E PROVIDENCE
0014	000	1	MASSASOIT	AVE	4285	Overhead	Distribution	Luminaire	LUM HPS RWY 100W	Active	100	65485-54003	S-14	CITY OF E PROVIDENCE
0015	000	1	MASSASOIT	AVE	4285	Overhead	Distribution	Luminaire	LUM HPS RWY 100W	Active	100	65485-54003	S-14	CITY OF E PROVIDENCE
0020	000	1	MASSASOIT	AVE	4285	Overhead	Distribution	Luminaire	LUM HPS RWY 100W	Active	100	65485-54003	S-14	CITY OF E PROVIDENCE
0023	000	1	MASSASOIT	AVE	4285	Overhead	Distribution	Luminaire	LUM HPS RWY 100W	Active	100	65485-54003	S-14	CITY OF E PROVIDENCE
0023	000	3	MASSASOIT	AVE	4285	Overhead	Distribution	Luminaire	LUM HPS FLD 250W	Active	250	77944-73007	S-10	CITY OF E PROVIDENCE
0024	000	1	MASSASOIT	AVE	4285	Overhead	Distribution	Luminaire	LUM HPS RWY 100W	Active	100	65485-54003	S-14	CITY OF E PROVIDENCE
0027	000	1	MASSASOIT	AVE	4285	Overhead	Distribution	Luminaire	LUM HPS RWY 100W	Active	100	65485-54003	S-14	CITY OF E PROVIDENCE
0028	000	1	MASSASOIT	AVE	4285	Overhead	Distribution	Luminaire	LUM HPS RWY 100W	Active	100	65485-54003	S-14	CITY OF E PROVIDENCE
0030	000	1	MASSASOIT	AVE	4285	Overhead	Distribution	Luminaire	LUM HPS RWY 100W	Active	100	65485-54003	S-14	CITY OF E PROVIDENCE
0031	050	1	MASSASOIT	AVE	4285	Overhead	Distribution	Luminaire	LUM HPS RWY 100W	Active	100	65485-54003	S-14	CITY OF E PROVIDENCE
0034	000	1	MASSASOIT	AVE	4285	Overhead	Distribution	Luminaire	LUM HPS RWY 100W	Active	100	65485-54003	S-14	CITY OF E PROVIDENCE
0035	050	1	MASSASOIT	AVE	4285	Overhead	Distribution	Luminaire	LUM HPS RWY 100W	Active	100	65485-54003	S-14	CITY OF E PROVIDENCE
0037	000	1	MASSASOIT	AVE	4285	Overhead	Distribution	Luminaire	LUM HPS RWY 100W	Active	100	65485-54003	S-14	CITY OF E PROVIDENCE
0038	050	1	MASSASOIT	AVE	4285	Overhead	Distribution	Luminaire	LUM HPS RWY 100W	Active	100	65485-54003	S-14	CITY OF E PROVIDENCE
0040	000	2	MASSASOIT	AVE	4285	Overhead	Distribution	Luminaire	LUM HPS RWY 250W TT	Temp Turn Off	250	65485-54003	S-14	CITY OF E PROVIDENCE

Pole No	Pole Suffix	Light Sequ No	Street Name	Street Suffix	Ngrid Line No	Source Type	Pole Use	Component Type	Bill Print and Tariff Description	Billing Status	Lamp Wattage	Account No	Rate	Customer Name
0041	050	1	MASSASOIT	AVE	4285	Overhead	Distribution	Luminaire	LUM HPS RWY 100W	Active	100	65485-54003	S-14	CITY OF E PROVIDENCE
0043	000	1	MASSASOIT	AVE	4285	Overhead	Distribution	Luminaire	LUM HPS RWY 100W	Active	100	65485-54003	S-14	CITY OF E PROVIDENCE
0044	050	1	MASSASOIT	AVE	4285	Overhead	Distribution	Luminaire	LUM HPS RWY 100W	Active	100	65485-54003	S-14	CITY OF E PROVIDENCE
0045	000	2	MASSASOIT	AVE	4285	Overhead	Distribution	Luminaire	LUM HPS RWY 250W	Active	250	65485-54003	S-14	CITY OF E PROVIDENCE
0047	000	1	MASSASOIT	AVE	4285	Overhead	Distribution	Luminaire	LUM HPS RWY 100W	Active	100	65485-54003	S-14	CITY OF E PROVIDENCE
0048	050	2	MASSASOIT	AVE	4285	Overhead	Distribution	Luminaire	LUM HPS RWY 250W TT	Temp Turn Off	250	65485-54003	S-14	CITY OF E PROVIDENCE
0049	000	1	MASSASOIT	AVE	4285	Overhead	Distribution	Luminaire	LUM HPS RWY 100W	Active	100	65485-54003	S-14	CITY OF E PROVIDENCE
0050	050	2	MASSASOIT	AVE	4285	Overhead	Distribution	Luminaire	LUM HPS RWY 250W TT	Temp Turn Off	250	65485-54003	S-14	CITY OF E PROVIDENCE
0051	000	2	MASSASOIT	AVE	4285	Overhead	Distribution	Luminaire	LUM HPS RWY 250W	Active	250	65485-54003	S-14	CITY OF E PROVIDENCE
0052	050	1	MASSASOIT	AVE	4285	Overhead	Distribution	Luminaire	LUM HPS RWY 100W	Active	100	65485-54003	S-14	CITY OF E PROVIDENCE
0002	000	2	MAURAN	AVE	4290	Overhead	Distribution	Luminaire	LUM HPS RWY 50W	Active	50	65485-54003	S-14	CITY OF E PROVIDENCE
0004	000	2	MAURAN	AVE	4290	Overhead	Distribution	Luminaire	LUM HPS RWY 50W	Active	50	65485-54003	S-14	CITY OF E PROVIDENCE
0006	000	2	MAURAN	AVE	4290	Overhead	Distribution	Luminaire	LUM HPS RWY 50W	Active	50	65485-54003	S-14	CITY OF E PROVIDENCE
0008	000	1	MAURAN	AVE	4290	Overhead	Distribution	Luminaire	LUM HPS RWY 50W	Active	50	65485-54003	S-14	CITY OF E PROVIDENCE
0012	000	1	MAURAN	AVE	4290	Overhead	Distribution	Luminaire	LUM HPS RWY 50W	Active	50	65485-54003	S-14	CITY OF E PROVIDENCE
0016	050	2	MAURAN	AVE	4290	Overhead	Distribution	Luminaire	LUM HPS RWY 50W	Active	50	65485-54003	S-14	CITY OF E PROVIDENCE
0027	000	2	MAURAN	AVE	4290	Overhead	Distribution	Luminaire	LUM HPS RWY 50W	Active	50	65485-54003	S-14	CITY OF E PROVIDENCE
0035	000	2	MAURAN	AVE	4290	Overhead	Distribution	Luminaire	LUM HPS RWY 50W	Active	50	65485-54003	S-14	CITY OF E PROVIDENCE
0037	000	2	MAURAN	AVE	4290	Overhead	Distribution	Luminaire	LUM HPS RWY 50W	Active	50	65485-54003	S-14	CITY OF E PROVIDENCE
0039	000	2	MAURAN	AVE	4290	Overhead	Distribution	Luminaire	LUM HPS RWY 50W TT	Temp Turn Off	50	65485-54003	S-14	CITY OF E PROVIDENCE
0042	000	1	MAURAN	AVE	4290	Overhead	Distribution	Luminaire	LUM HPS RWY 50W	Active	50	65485-54003	S-14	CITY OF E PROVIDENCE
0044	000	2	MAURAN	AVE	4290	Overhead	Distribution	Luminaire	LUM HPS RWY 50W	Active	50	65485-54003	S-14	CITY OF E PROVIDENCE
0046	000	2	MAURAN	AVE	4290	Overhead	Distribution	Luminaire	LUM HPS RWY 50W	Active	50	65485-54003	S-14	CITY OF E PROVIDENCE
9014	000	2	MAURAN	AVE	4290	Overhead	Distribution	Luminaire	LUM HPS RWY 50W	Active	50	65485-54003	S-14	CITY OF E PROVIDENCE
9015	000	2	MAURAN	AVE	4290	Overhead	Distribution	Luminaire	LUM HPS RWY 50W TT	Temp Turn Off	50	65485-54003	S-14	CITY OF E PROVIDENCE
9018	000	2	MAURAN	AVE	4290	Overhead	Distribution	Luminaire	LUM HPS RWY 50W TT	Temp Turn Off	50	65485-54003	S-14	CITY OF E PROVIDENCE
9019	000	2	MAURAN	AVE	4290	Overhead	Distribution	Luminaire	LUM HPS RWY 50W	Active	50	65485-54003	S-14	CITY OF E PROVIDENCE
9021	000	2	MAURAN	AVE	4290	Overhead	Distribution	Luminaire	LUM HPS RWY 50W	Active	50	65485-54003	S-14	CITY OF E PROVIDENCE
9022	000	2	MAURAN	AVE	4290	Overhead	Distribution	Luminaire	LUM HPS RWY 50W	Active	50	65485-54003	S-14	CITY OF E PROVIDENCE
9023	000	2	MAURAN	AVE	4290	Overhead	Distribution	Luminaire	LUM HPS RWY 50W TT	Temp Turn Off	50	65485-54003	S-14	CITY OF E PROVIDENCE
9024	000	2	MAURAN	AVE	4290	Overhead	Distribution	Luminaire	LUM HPS RWY 50W	Active	50	65485-54003	S-14	CITY OF E PROVIDENCE
9029	000	2	MAURAN	AVE	4290	Overhead	Distribution	Luminaire	LUM HPS RWY 50W	Active	50	65485-54003	S-14	CITY OF E PROVIDENCE
9031	000	2	MAURAN	AVE	4290	Overhead	Distribution	Luminaire	LUM HPS RWY 50W	Active	50	65485-54003	S-14	CITY OF E PROVIDENCE
9032	000	2	MAURAN	AVE	4290	Overhead	Distribution	Luminaire	LUM HPS RWY 50W	Active	50	65485-54003	S-14	CITY OF E PROVIDENCE
0002	000	2	MAXFIELD	AVE	4295	Overhead	Distribution	Luminaire	LUM HPS RWY 50W	Active	50	65485-54003	S-14	CITY OF E PROVIDENCE
0004	000	2	MAXFIELD	AVE	4295	Overhead	Distribution	Luminaire	LUM HPS RWY 50W	Active	50	65485-54003	S-14	CITY OF E PROVIDENCE
0005	000	2	MAXFIELD	AVE	4295	Overhead	Distribution	Luminaire	LUM HPS RWY 50W	Active	50	65485-54003	S-14	CITY OF E PROVIDENCE
0008	000	2	MAXFIELD	AVE	4295	Overhead	Distribution	Luminaire	LUM HPS RWY 50W TT	Temp Turn Off	50	65485-54003	S-14	CITY OF E PROVIDENCE
0001	000	2	MAYFAIR	DR	4300	Overhead	Distribution	Luminaire	LUM HPS RWY 50W	Active	50	65485-54003	S-14	CITY OF E PROVIDENCE
0003	000	2	MAYFAIR	DR	4300	Overhead	Distribution	Luminaire	LUM HPS RWY 50W	Active	50	65485-54003	S-14	CITY OF E PROVIDENCE
0005	000	2	MAYFAIR	DR	4300	Overhead	Distribution	Luminaire	LUM HPS RWY 50W	Active	50	65485-54003	S-14	CITY OF E PROVIDENCE
0007	000	2	MAYFAIR	DR	4300	Overhead	Distribution	Luminaire	LUM HPS RWY 50W	Active	50	65485-54003	S-14	CITY OF E PROVIDENCE
0001	000	2	MAYFLOWER	ST	4305	Overhead	Distribution	Luminaire	LUM HPS RWY 50W	Active	50	65485-54003	S-14	CITY OF E PROVIDENCE
0003	000	2	MAYFLOWER	ST	4305	Overhead	Distribution	Luminaire	LUM HPS RWY 50W TT	Temp Turn Off	50	65485-54003	S-14	CITY OF E PROVIDENCE
0004	000	2	MAYFLOWER	ST	4305	Overhead	Distribution	Luminaire	LUM HPS RWY 50W	Active	50	65485-54003	S-14	CITY OF E PROVIDENCE
0005	000	2	MAYFLOWER	ST	4305	Overhead	Distribution	Luminaire	LUM HPS RWY 50W	Active	50	65485-54003	S-14	CITY OF E PROVIDENCE
0007	000	2	MAYFLOWER	ST	4305	Overhead	Distribution	Luminaire	LUM HPS RWY 50W	Active	50	65485-54003	S-14	CITY OF E PROVIDENCE
0009	000	2	MAYFLOWER	ST	4305	Overhead	Distribution	Luminaire	LUM HPS RWY 50W	Active	50	65485-54003	S-14	CITY OF E PROVIDENCE
0011	000	2	MAYFLOWER	ST	4305	Overhead	Distribution	Luminaire	LUM HPS RWY 50W	Active	50	65485-54003	S-14	CITY OF E PROVIDENCE
0013	000	2	MAYFLOWER	ST	4305	Overhead	Distribution	Luminaire	LUM HPS RWY 50W	Active	50	65485-54003	S-14	CITY OF E PROVIDENCE
0015	000	2	MAYFLOWER	ST	4305	Overhead	Distribution	Luminaire	LUM HPS RWY 50W	Active	50	65485-54003	S-14	CITY OF E PROVIDENCE
0001	000	2	MCARTHUR	ST	4307	Overhead	Distribution	Luminaire	LUM HPS RWY 50W TT	Temp Turn Off	50	65485-54003	S-14	CITY OF E PROVIDENCE
0001	000	2	MCCAUSLAND	AVE	4310	Overhead	Distribution	Luminaire	LUM HPS RWY 50W	Active	50	65485-54003	S-14	CITY OF E PROVIDENCE
0003	000	2	MCCAUSLAND	AVE	4310	Overhead	Distribution	Luminaire	LUM HPS RWY 50W	Active	50	65485-54003	S-14	CITY OF E PROVIDENCE
0001	000	2	MCGARTLAND	ST	4315	Overhead	Distribution	Luminaire	LUM HPS RWY 50W	Active	50	65485-54003	S-14	CITY OF E PROVIDENCE

Pole No	Pole Suffix	Light Sequ No	Street Name	Street Suffix	Ngrid Line No	Source Type	Pole Use	Component Type	Bill Print and Tariff Description	Billing Status	Lamp Wattage	Account No	Rate	Customer Name
0002	000	2	MCGARTLAND	ST	4315	Overhead	Distribution	Luminaire	LUM HPS RWY 50W	Active	50	65485-54003	S-14	CITY OF E PROVIDENCE
0001	000	2	MEADOW	AVE	4325	Overhead	Distribution	Luminaire	LUM HPS RWY 50W TT	Temp Turn Off	50	65485-54003	S-14	CITY OF E PROVIDENCE
0001	000	2	MEADOWCREST	DR	4330	Overhead	Distribution	Luminaire	LUM HPS RWY 50W TT	Temp Turn Off	50	65485-54003	S-14	CITY OF E PROVIDENCE
0002	000	2	MEADOWCREST	DR	4330	Overhead	Distribution	Luminaire	LUM HPS RWY 50W	Active	50	65485-54003	S-14	CITY OF E PROVIDENCE
0004	000	2	MEADOWCREST	DR	4330	Overhead	Distribution	Luminaire	LUM HPS RWY 50W	Active	50	65485-54003	S-14	CITY OF E PROVIDENCE
0006	000	2	MEADOWCREST	DR	4330	Overhead	Distribution	Luminaire	LUM HPS RWY 50W	Active	50	65485-54003	S-14	CITY OF E PROVIDENCE
0007	000	2	MEADOWCREST	DR	4330	Overhead	Distribution	Luminaire	LUM HPS RWY 50W TT	Temp Turn Off	50	90426-19008	S-14	CITY OF E PROVIDENCE
0008	000	2	MEADOWCREST	DR	4330	Overhead	Distribution	Luminaire	LUM HPS RWY 50W	Active	50	65485-54003	S-14	CITY OF E PROVIDENCE
0010	000	2	MEADOWCREST	DR	4330	Overhead	Distribution	Luminaire	LUM HPS RWY 50W	Active	50	65485-54003	S-14	CITY OF E PROVIDENCE
0003	000	2	MEDBERRY	ST	4335	Overhead	Distribution	Luminaire	LUM HPS RWY 50W	Active	50	65485-54003	S-14	CITY OF E PROVIDENCE
0000	050	2	MERCER	ST	4345	Overhead	Distribution	Luminaire	LUM HPS RWY 50W	Active	50	65485-54003	S-14	CITY OF E PROVIDENCE
0001	000	2	MERCER	ST	4345	Overhead	Distribution	Luminaire	LUM HPS RWY 50W TT	Temp Turn Off	50	65485-54003	S-14	CITY OF E PROVIDENCE
0002	000	2	MERCER	ST	4345	Overhead	Distribution	Luminaire	LUM HPS RWY 50W TT	Temp Turn Off	50	65485-54003	S-14	CITY OF E PROVIDENCE
0002	050	2	MERCER	ST	4345	Overhead	Distribution	Luminaire	LUM HPS RWY 50W TT	Temp Turn Off	50	65485-54003	S-14	CITY OF E PROVIDENCE
0005	000	2	MERCER	ST	4345	Overhead	Distribution	Luminaire	LUM HPS RWY 50W	Active	50	65485-54003	S-14	CITY OF E PROVIDENCE
0007	000	2	MERCER	ST	4345	Overhead	Distribution	Luminaire	LUM HPS RWY 50W	Active	50	65485-54003	S-14	CITY OF E PROVIDENCE
0008	000	2	MERCER	ST	4345	Overhead	Distribution	Luminaire	LUM HPS RWY 50W	Active	50	65485-54003	S-14	CITY OF E PROVIDENCE
0010	000	1	MERCER	ST	4345	Overhead	Distribution	Luminaire	LUM HPS RWY 50W	Active	50	65485-54003	S-14	CITY OF E PROVIDENCE
0011	000	1	MERCER	ST	4345	Overhead	Distribution	Luminaire	LUM HPS RWY 50W	Active	50	65485-54003	S-14	CITY OF E PROVIDENCE
0013	000	1	MERCER	ST	4345	Overhead	Distribution	Luminaire	LUM HPS RWY 50W	Active	50	65485-54003	S-14	CITY OF E PROVIDENCE
0015	000	1	MERCER	ST	4345	Overhead	Distribution	Luminaire	LUM HPS RWY 50W	Active	50	65485-54003	S-14	CITY OF E PROVIDENCE
0001	000	2	MERCHANT	ST	4350	Overhead	Distribution	Luminaire	LUM HPS RWY 50W	Active	50	65485-54003	S-14	CITY OF E PROVIDENCE
0001	000	2	MERRICK	ST	4355	Overhead	Distribution	Luminaire	LUM HPS RWY 50W	Active	50	65485-54003	S-14	CITY OF E PROVIDENCE
0003	000	2	MERRICK	ST	4355	Overhead	Distribution	Luminaire	LUM HPS RWY 50W TT	Temp Turn Off	50	65485-54003	S-14	CITY OF E PROVIDENCE
0004	000	2	MERRICK	ST	4355	Overhead	Distribution	Luminaire	LUM HPS RWY 50W	Active	50	65485-54003	S-14	CITY OF E PROVIDENCE
0006	000	2	MERRICK	ST	4355	Overhead	Distribution	Luminaire	LUM HPS RWY 50W	Active	50	65485-54003	S-14	CITY OF E PROVIDENCE
0002	000	2	MERRILL	ST	4360	Overhead	Distribution	Luminaire	LUM HPS RWY 50W	Active	50	65485-54003	S-14	CITY OF E PROVIDENCE
0004	000	2	MERRILL	ST	4360	Overhead	Distribution	Luminaire	LUM HPS RWY 50W	Active	50	65485-54003	S-14	CITY OF E PROVIDENCE
0006	000	2	MERRILL	ST	4360	Overhead	Distribution	Luminaire	LUM HPS RWY 50W	Active	50	65485-54003	S-14	CITY OF E PROVIDENCE
0007	000	2	MERRILL	ST	4360	Overhead	Distribution	Luminaire	LUM HPS RWY 50W	Active	50	90426-19008	S-14	CITY OF E PROVIDENCE
0008	000	2	MERRILL	ST	4360	Overhead	Distribution	Luminaire	LUM HPS RWY 50W TT	Temp Turn Off	50	65485-54003	S-14	CITY OF E PROVIDENCE
0010	000	2	MERRILL	ST	4360	Overhead	Distribution	Luminaire	LUM HPS RWY 50W	Active	50	65485-54003	S-14	CITY OF E PROVIDENCE
0012	000	2	MERRILL	ST	4360	Overhead	Distribution	Luminaire	LUM HPS RWY 50W	Active	50	65485-54003	S-14	CITY OF E PROVIDENCE
0001	000	2	MERRITT	RD	4365	Overhead	Distribution	Luminaire	LUM HPS RWY 50W	Active	50	65485-54003	S-14	CITY OF E PROVIDENCE
0002	000	2	MERRITT	RD	4365	Overhead	Distribution	Luminaire	LUM HPS RWY 50W	Active	50	65485-54003	S-14	CITY OF E PROVIDENCE
0003	000	2	MERRITT	RD	4365	Overhead	Distribution	Luminaire	LUM HPS RWY 50W	Active	50	65485-54003	S-14	CITY OF E PROVIDENCE
0005	000	2	MERRITT	RD	4365	Overhead	Distribution	Luminaire	LUM HPS RWY 50W	Active	50	65485-54003	S-14	CITY OF E PROVIDENCE
0007	000	2	MERRITT	RD	4365	Overhead	Distribution	Luminaire	LUM HPS RWY 50W	Active	50	65485-54003	S-14	CITY OF E PROVIDENCE
0008	000	2	MERRITT	RD	4365	Overhead	Distribution	Luminaire	LUM HPS RWY 50W	Active	50	65485-54003	S-14	CITY OF E PROVIDENCE
0009	000	2	MERRITT	RD	4365	Overhead	Distribution	Luminaire	LUM HPS RWY 50W	Active	50	65485-54003	S-14	CITY OF E PROVIDENCE
0010	000	2	MERRITT	RD	4365	Overhead	Distribution	Luminaire	LUM HPS RWY 50W	Active	50	65485-54003	S-14	CITY OF E PROVIDENCE
0001	000	2	METACOMET	AVE	4370	Overhead	Distribution	Luminaire	LUM HPS RWY 50W	Active	50	65485-54003	S-14	CITY OF E PROVIDENCE
0003	000	2	METACOMET	AVE	4370	Overhead	Distribution	Luminaire	LUM HPS RWY 50W	Active	50	65485-54003	S-14	CITY OF E PROVIDENCE
0005	000	2	METACOMET	AVE	4370	Overhead	Distribution	Luminaire	LUM HPS RWY 50W	Active	50	65485-54003	S-14	CITY OF E PROVIDENCE
0006	000	2	METACOMET	AVE	4370	Overhead	Distribution	Luminaire	LUM HPS RWY 50W	Active	50	65485-54003	S-14	CITY OF E PROVIDENCE
0008	000	2	METACOMET	AVE	4370	Overhead	Distribution	Luminaire	LUM HPS RWY 50W	Active	50	65485-54003	S-14	CITY OF E PROVIDENCE
0010	000	2	METACOMET	AVE	4370	Overhead	Distribution	Luminaire	LUM HPS RWY 50W	Active	50	65485-54003	S-14	CITY OF E PROVIDENCE
0012	000	2	METACOMET	AVE	4370	Overhead	Distribution	Luminaire	LUM HPS RWY 50W	Active	50	65485-54003	S-14	CITY OF E PROVIDENCE
0014	000	2	METACOMET	AVE	4370	Overhead	Distribution	Luminaire	LUM HPS RWY 50W	Active	50	65485-54003	S-14	CITY OF E PROVIDENCE
0001	000	2	MIDDLE	ST	4380	Overhead	Distribution	Luminaire	LUM HPS RWY 50W TT	Temp Turn Off	50	65485-54003	S-14	CITY OF E PROVIDENCE
0003	000	2	MIDDLE	ST	4380	Overhead	Distribution	Luminaire	LUM HPS RWY 50W	Active	50	65485-54003	S-14	CITY OF E PROVIDENCE
0006	000	2	MIDDLE	ST	4380	Overhead	Distribution	Luminaire	LUM HPS RWY 50W	Active	50	90426-19008	S-14	CITY OF E PROVIDENCE
0007	000	2	MIDDLE	ST	4380	Overhead	Distribution	Luminaire	LUM HPS RWY 50W	Active	50	65485-54003	S-14	CITY OF E PROVIDENCE
0008	000	2	MIDDLE	ST	4380	Overhead	Distribution	Luminaire	LUM HPS RWY 50W	Active	50	65485-54003	S-14	CITY OF E PROVIDENCE
0009	000	2	MIDDLE	ST	4380	Overhead	Distribution	Luminaire	LUM HPS RWY 50W	Active	50	65485-54003	S-14	CITY OF E PROVIDENCE

Pole No	Pole Suffix	Light Sequ No	Street Name	Street Suffix	Ngrid Line No	Source Type	Pole Use	Component Type	Bill Print and Tariff Description	Billing Status	Lamp Wattage	Account No	Rate	Customer Name
0002	000	2	MILBURN	RD	4385	Overhead	Distribution	Luminaire	LUM HPS RWY 50W	Active	50	65485-54003	S-14	CITY OF E PROVIDENCE
0003	000	2	MILBURN	RD	4385	Overhead	Distribution	Luminaire	LUM HPS RWY 50W	Active	50	65485-54003	S-14	CITY OF E PROVIDENCE
0004	000	2	MILBURN	RD	4385	Overhead	Distribution	Luminaire	LUM HPS RWY 50W	Active	50	65485-54003	S-14	CITY OF E PROVIDENCE
0006	000	2	MILBURN	RD	4385	Overhead	Distribution	Luminaire	LUM HPS RWY 50W	Active	50	65485-54003	S-14	CITY OF E PROVIDENCE
0001	000	2	MILES	AVE	4395	Overhead	Distribution	Luminaire	LUM HPS RWY 50W	Active	50	65485-54003	S-14	CITY OF E PROVIDENCE
0003	000	2	MILES	AVE	4395	Overhead	Distribution	Luminaire	LUM HPS RWY 50W	Active	50	65485-54003	S-14	CITY OF E PROVIDENCE
0005	000	2	MILES	AVE	4395	Overhead	Distribution	Luminaire	LUM HPS RWY 50W	Active	50	65485-54003	S-14	CITY OF E PROVIDENCE
0007	000	2	MILES	AVE	4395	Overhead	Distribution	Luminaire	LUM HPS RWY 50W	Active	50	65485-54003	S-14	CITY OF E PROVIDENCE
0009	000	2	MILES	AVE	4395	Overhead	Distribution	Luminaire	LUM HPS RWY 50W	Active	50	65485-54003	S-14	CITY OF E PROVIDENCE
0001	000	2	MILLER	AVE	4400	Overhead	Distribution	Luminaire	LUM HPS RWY 50W	Active	50	65485-54003	S-14	CITY OF E PROVIDENCE
0003	000	2	MILLER	AVE	4400	Overhead	Distribution	Luminaire	LUM HPS RWY 50W	Active	50	65485-54003	S-14	CITY OF E PROVIDENCE
0005	000	2	MILLER	AVE	4400	Overhead	Distribution	Luminaire	LUM HPS RWY 50W TT	Temp Turn Off	50	65485-54003	S-14	CITY OF E PROVIDENCE
0007	000	2	MILLER	AVE	4400	Overhead	Distribution	Luminaire	LUM HPS RWY 50W	Active	50	65485-54003	S-14	CITY OF E PROVIDENCE
0009	000	2	MILLER	AVE	4400	Overhead	Distribution	Luminaire	LUM HPS RWY 50W	Active	50	65485-54003	S-14	CITY OF E PROVIDENCE
0012	000	2	MILLER	AVE	4400	Overhead	Distribution	Luminaire	LUM HPS RWY 50W	Active	50	65485-54003	S-14	CITY OF E PROVIDENCE
0014	000	2	MILLER	AVE	4400	Overhead	Distribution	Luminaire	LUM HPS RWY 50W	Active	50	65485-54003	S-14	CITY OF E PROVIDENCE
0016	000	2	MILLER	AVE	4400	Overhead	Distribution	Luminaire	LUM HPS RWY 50W	Active	50	65485-54003	S-14	CITY OF E PROVIDENCE
0002	000	2	MIRIAN	ST	4410	Overhead	Distribution	Luminaire	LUM HPS RWY 50W	Active	50	65485-54003	S-14	CITY OF E PROVIDENCE
0002	000	2	MOHAWK	DR	4415	Overhead	Distribution	Luminaire	LUM HPS RWY 50W	Active	50	65485-54003	S-14	CITY OF E PROVIDENCE
0003	000	2	MOHAWK	DR	4415	Overhead	Distribution	Luminaire	LUM HPS RWY 50W	Active	50	65485-54003	S-14	CITY OF E PROVIDENCE
0004	000	2	MOHAWK	DR	4415	Overhead	Distribution	Luminaire	LUM HPS RWY 50W	Active	50	65485-54003	S-14	CITY OF E PROVIDENCE
0001	000	2	MONMOUTH	DR	4420	Overhead	Distribution	Luminaire	LUM HPS RWY 50W	Active	50	65485-54003	S-14	CITY OF E PROVIDENCE
0003	000	2	MONMOUTH	DR	4420	Overhead	Distribution	Luminaire	LUM HPS RWY 50W	Active	50	65485-54003	S-14	CITY OF E PROVIDENCE
0005	000	2	MONMOUTH	DR	4420	Overhead	Distribution	Luminaire	LUM HPS RWY 50W	Active	50	65485-54003	S-14	CITY OF E PROVIDENCE
0006	000	2	MONMOUTH	DR	4420	Overhead	Distribution	Luminaire	LUM HPS RWY 50W	Active	50	65485-54003	S-14	CITY OF E PROVIDENCE
0008	000	2	MONMOUTH	DR	4420	Overhead	Distribution	Luminaire	LUM HPS RWY 50W	Active	50	65485-54003	S-14	CITY OF E PROVIDENCE
0010	000	2	MONMOUTH	DR	4420	Overhead	Distribution	Luminaire	LUM HPS RWY 50W	Active	50	65485-54003	S-14	CITY OF E PROVIDENCE
0000	050	1	MONROE	AVE	4421	Overhead	Distribution	Luminaire	LUM HPS RWY 50W	Active	50	65485-54003	S-14	CITY OF E PROVIDENCE
0001	000	2	MONROE	AVE	4421	Overhead	Distribution	Luminaire	LUM HPS RWY 100W TT	Temp Turn Off	100	65485-54003	S-14	CITY OF E PROVIDENCE
0003	000	2	MONROE	AVE	4421	Overhead	Distribution	Luminaire	LUM HPS RWY 100W	Active	100	65485-54003	S-14	CITY OF E PROVIDENCE
0001	000	2	MOORE	ST	4430	Overhead	Distribution	Luminaire	LUM HPS RWY 50W	Active	50	65485-54003	S-14	CITY OF E PROVIDENCE
0003	000	2	MOORE	ST	4430	Overhead	Distribution	Luminaire	LUM HPS RWY 50W	Active	50	65485-54003	S-14	CITY OF E PROVIDENCE
0004	000	2	MOORE	ST	4430	Overhead	Distribution	Luminaire	LUM HPS RWY 50W TT	Temp Turn Off	50	90426-19008	S-14	CITY OF E PROVIDENCE
0005	000	2	MOORE	ST	4430	Overhead	Distribution	Luminaire	LUM HPS RWY 50W	Active	50	65485-54003	S-14	CITY OF E PROVIDENCE
0006	000	2	MOORE	ST	4430	Overhead	Distribution	Luminaire	LUM HPS RWY 50W	Active	50	65485-54003	S-14	CITY OF E PROVIDENCE
0002	000	2	MOORLAND	AVE	4435	Overhead	Distribution	Luminaire	LUM HPS RWY 50W	Active	50	65485-54003	S-14	CITY OF E PROVIDENCE
0002	035	2	MOORLAND	AVE	4435	Overhead	Distribution	Luminaire	LUM HPS RWY 50W	Active	50	65485-54003	S-14	CITY OF E PROVIDENCE
0003	000	2	MOORLAND	AVE	4435	Overhead	Distribution	Luminaire	LUM HPS RWY 50W	Active	50	65485-54003	S-14	CITY OF E PROVIDENCE
0005	000	2	MOORLAND	AVE	4435	Overhead	Distribution	Luminaire	LUM HPS RWY 50W	Active	50	65485-54003	S-14	CITY OF E PROVIDENCE
0006	000	2	MOORLAND	AVE	4435	Overhead	Distribution	Luminaire	LUM HPS RWY 50W	Active	50	65485-54003	S-14	CITY OF E PROVIDENCE
0001	000	0	MORRA	WAY	4437	Underground	Street Lighting	Pole	POLE FIBER PT <25	Inactive	0	90426-19008	S-14	CITY OF E PROVIDENCE
0001	000	1	MORRA	WAY	4437	Underground	Street Lighting	Luminaire	LUM HPS POST 50W	Active	50	90426-19008	S-14	CITY OF E PROVIDENCE
0002	000	0	MORRA	WAY	4437	Underground	Street Lighting	Pole	POLE FIBER PT <25	Inactive	0	90426-19008	S-14	CITY OF E PROVIDENCE
0002	000	1	MORRA	WAY	4437	Underground	Street Lighting	Luminaire	LUM HPS POST 50W	Active	50	90426-19008	S-14	CITY OF E PROVIDENCE
0003	000	0	MORRA	WAY	4437	Underground	Street Lighting	Pole	POLE FIBER PT <25	Inactive	0	90426-19008	S-14	CITY OF E PROVIDENCE
0003	000	1	MORRA	WAY	4437	Underground	Street Lighting	Luminaire	LUM HPS POST 50W	Active	50	90426-19008	S-14	CITY OF E PROVIDENCE
0004	000	0	MORRA	WAY	4437	Underground	Street Lighting	Pole	POLE FIBER PT <25	Inactive	0	90426-19008	S-14	CITY OF E PROVIDENCE
0004	000	1	MORRA	WAY	4437	Underground	Street Lighting	Luminaire	LUM HPS POST 50W	Active	50	90426-19008	S-14	CITY OF E PROVIDENCE
0007	000	0	MORRA	WAY	4437	Underground	Street Lighting	Pole	POLE FIBER PT <25	Inactive	0	90426-19008	S-14	CITY OF E PROVIDENCE
0007	000	1	MORRA	WAY	4437	Underground	Street Lighting	Luminaire	LUM HPS POST 50W	Active	50	90426-19008	S-14	CITY OF E PROVIDENCE
0008	000	0	MORRA	WAY	4437	Underground	Street Lighting	Pole	POLE FIBER PT <25	Inactive	0	90426-19008	S-14	CITY OF E PROVIDENCE
0008	000	1	MORRA	WAY	4437	Underground	Street Lighting	Luminaire	LUM HPS POST 50W	Active	50	90426-19008	S-14	CITY OF E PROVIDENCE
0002	000	2	MORRIS	LN	4440	Overhead	Distribution	Luminaire	LUM HPS RWY 50W	Active	50	65485-54003	S-14	CITY OF E PROVIDENCE
0004	000	2	MORRIS	LN	4440	Overhead	Distribution	Luminaire	LUM HPS RWY 50W	Active	50	65485-54003	S-14	CITY OF E PROVIDENCE
0001	000	2	MOUNTAIN	AVE	4445	Overhead	Distribution	Luminaire	LUM HPS RWY 50W	Active	50	65485-54003	S-14	CITY OF E PROVIDENCE

Pole No	Pole Suffix	Light Sequ No	Street Name	Street Suffix	Ngrid Line No	Source Type	Pole Use	Component Type	Bill Print and Tariff Description	Billing Status	Lamp Wattage	Account No	Rate	Customer Name
0004	000	2	MOUNTAIN	AVE	4445	Overhead	Distribution	Luminaire	LUM HPS RWY 50W	Active	50	90426-19008	S-14	CITY OF E PROVIDENCE
0007	000	2	MOUNTAIN	AVE	4445	Overhead	Distribution	Luminaire	LUM HPS RWY 50W	Active	50	65485-54003	S-14	CITY OF E PROVIDENCE
0009	000	2	MOUNTAIN	AVE	4445	Overhead	Distribution	Luminaire	LUM HPS RWY 50W	Active	50	65485-54003	S-14	CITY OF E PROVIDENCE
0001	000	2	MOWRY	AVE	4450	Overhead	Distribution	Luminaire	LUM HPS RWY 50W	Active	50	65485-54003	S-14	CITY OF E PROVIDENCE
0003	000	2	MOWRY	AVE	4450	Overhead	Distribution	Luminaire	LUM HPS RWY 50W	Active	50	65485-54003	S-14	CITY OF E PROVIDENCE
0005	000	2	MOWRY	AVE	4450	Overhead	Distribution	Luminaire	LUM HPS RWY 50W	Active	50	65485-54003	S-14	CITY OF E PROVIDENCE
0007	000	2	MOWRY	AVE	4450	Overhead	Distribution	Luminaire	LUM HPS RWY 50W	Active	50	65485-54003	S-14	CITY OF E PROVIDENCE
0007	050	2	MOWRY	AVE	4450	Overhead	Distribution	Luminaire	LUM HPS RWY 50W	Active	50	90426-19008	S-14	CITY OF E PROVIDENCE
0001	000	2	MURIAL	ST	4455	Overhead	Distribution	Luminaire	LUM HPS RWY 50W	Active	50	65485-54003	S-14	CITY OF E PROVIDENCE
0001	000	2	MYRTLE	AVE	4470	Overhead	Distribution	Luminaire	LUM HPS RWY 50W	Active	50	90426-19008	S-14	CITY OF E PROVIDENCE
0002	000	2	MYRTLE	AVE	4470	Overhead	Distribution	Luminaire	LUM HPS RWY 50W	Active	50	90426-19008	S-14	CITY OF E PROVIDENCE
0004	000	2	MYRTLE	AVE	4470	Overhead	Distribution	Luminaire	LUM HPS RWY 50W	Active	50	90426-19008	S-14	CITY OF E PROVIDENCE
0001	000	0	N VILLAGE GREEN	ST	6632	Underground	Street Lighting	Pole	POLE METAL =>25FT	Inactive	0	65485-54003	S-14	CITY OF E PROVIDENCE
0001	000	1	N VILLAGE GREEN	ST	6632	Underground	Street Lighting	Luminaire	LUM HPS RWY 50W	Active	50	65485-54003	S-14	CITY OF E PROVIDENCE
0002	000	0	N VILLAGE GREEN	ST	6632	Underground	Street Lighting	Pole	POLE METAL W/BASE	Active	0	65485-54003	S-14	CITY OF E PROVIDENCE
0002	000	2	N VILLAGE GREEN	ST	6632	Underground	Street Lighting	Luminaire	LUM HPS RWY 50W	Active	50	65485-54003	S-14	CITY OF E PROVIDENCE
0003	000	0	N VILLAGE GREEN	ST	6632	Underground	Street Lighting	Pole	POLE METAL W/BASE	Active	0	65485-54003	S-14	CITY OF E PROVIDENCE
0003	000	2	N VILLAGE GREEN	ST	6632	Underground	Street Lighting	Luminaire	LUM HPS RWY 50W	Active	50	65485-54003	S-14	CITY OF E PROVIDENCE
0004	000	0	N VILLAGE GREEN	ST	6632	Underground	Street Lighting	Pole	POLE METAL =>25FT	Inactive	0	65485-54003	S-14	CITY OF E PROVIDENCE
0004	000	2	N VILLAGE GREEN	ST	6632	Underground	Street Lighting	Luminaire	LUM HPS RWY 50W	Active	50	65485-54003	S-14	CITY OF E PROVIDENCE
0005	000	0	N VILLAGE GREEN	ST	6632	Underground	Street Lighting	Pole	POLE METAL =>25FT	Inactive	0	65485-54003	S-14	CITY OF E PROVIDENCE
0005	000	2	N VILLAGE GREEN	ST	6632	Underground	Street Lighting	Luminaire	LUM HPS RWY 50W	Active	50	65485-54003	S-14	CITY OF E PROVIDENCE
0006	000	0	N VILLAGE GREEN	ST	6632	Underground	Street Lighting	Pole	POLE METAL W/BASE	Active	0	65485-54003	S-14	CITY OF E PROVIDENCE
0006	000	2	N VILLAGE GREEN	ST	6632	Underground	Street Lighting	Luminaire	LUM HPS RWY 50W	Active	50	65485-54003	S-14	CITY OF E PROVIDENCE
0007	000	0	N VILLAGE GREEN	ST	6632	Underground	Street Lighting	Pole	POLE METAL W/BASE	Inactive	0	65485-54003	S-14	CITY OF E PROVIDENCE
0007	000	2	N VILLAGE GREEN	ST	6632	Underground	Street Lighting	Luminaire	LUM HPS RWY 50W	Red Cap Perm	50	65485-54003	S-14	CITY OF E PROVIDENCE
0008	000	0	N VILLAGE GREEN	ST	6632	Underground	Street Lighting	Pole	POLE METAL =>25FT	Inactive	0	65485-54003	S-14	CITY OF E PROVIDENCE
0008	000	2	N VILLAGE GREEN	ST	6632	Underground	Street Lighting	Luminaire	LUM HPS RWY 50W	Active	50	65485-54003	S-14	CITY OF E PROVIDENCE
0009	000	0	N VILLAGE GREEN	ST	6632	Underground	Street Lighting	Pole	POLE METAL =>25FT	Inactive	0	65485-54003	S-14	CITY OF E PROVIDENCE
0009	000	2	N VILLAGE GREEN	ST	6632	Underground	Street Lighting	Luminaire	LUM HPS RWY 100W TT	Temp Turn Off	100	65485-54003	S-14	CITY OF E PROVIDENCE
0010	000	0	N VILLAGE GREEN	ST	6632	Underground	Street Lighting	Pole	POLE METAL W/BASE	Active	0	65485-54003	S-14	CITY OF E PROVIDENCE
0010	000	2	N VILLAGE GREEN	ST	6632	Underground	Street Lighting	Luminaire	LUM HPS RWY 100W	Active	100	65485-54003	S-14	CITY OF E PROVIDENCE
0001	000	2	NARRAGANSETT	AVE	4480	Overhead	Distribution	Luminaire	LUM HPS RWY 50W	Active	50	65485-54003	S-14	CITY OF E PROVIDENCE
0002	000	2	NARRAGANSETT	AVE	4480	Overhead	Distribution	Luminaire	LUM HPS RWY 50W TT	Temp Turn Off	50	65485-54003	S-14	CITY OF E PROVIDENCE
0004	000	2	NARRAGANSETT	AVE	4480	Overhead	Distribution	Luminaire	LUM HPS RWY 50W	Active	50	65485-54003	S-14	CITY OF E PROVIDENCE
0006	000	2	NARRAGANSETT	AVE	4480	Overhead	Distribution	Luminaire	LUM HPS RWY 50W	Active	50	65485-54003	S-14	CITY OF E PROVIDENCE
0008	000	2	NARRAGANSETT	AVE	4480	Overhead	Distribution	Luminaire	LUM HPS RWY 50W	Active	50	65485-54003	S-14	CITY OF E PROVIDENCE
0009	000	2	NARRAGANSETT	AVE	4480	Overhead	Distribution	Luminaire	LUM HPS RWY 50W	Active	50	65485-54003	S-14	CITY OF E PROVIDENCE
0010	000	2	NARRAGANSETT	AVE	4480	Overhead	Distribution	Luminaire	LUM HPS RWY 50W TT	Temp Turn Off	50	65485-54003	S-14	CITY OF E PROVIDENCE
0012	000	2	NARRAGANSETT	AVE	4480	Overhead	Distribution	Luminaire	LUM HPS RWY 50W	Active	50	65485-54003	S-14	CITY OF E PROVIDENCE
0014	000	2	NARRAGANSETT	AVE	4480	Overhead	Distribution	Luminaire	LUM HPS RWY 50W	Active	50	65485-54003	S-14	CITY OF E PROVIDENCE
0016	000	2	NARRAGANSETT	AVE	4480	Overhead	Distribution	Luminaire	LUM HPS RWY 50W	Active	50	65485-54003	S-14	CITY OF E PROVIDENCE
0018	000	2	NARRAGANSETT	AVE	4480	Overhead	Distribution	Luminaire	LUM HPS RWY 50W	Active	50	65485-54003	S-14	CITY OF E PROVIDENCE
0020	000	2	NARRAGANSETT	AVE	4480	Overhead	Distribution	Luminaire	LUM HPS RWY 50W	Active	50	65485-54003	S-14	CITY OF E PROVIDENCE
0021	000	2	NARRAGANSETT	AVE	4480	Overhead	Distribution	Luminaire	LUM HPS RWY 50W TT	Temp Turn Off	50	65485-54003	S-14	CITY OF E PROVIDENCE
0022	000	2	NARRAGANSETT	AVE	4480	Overhead	Distribution	Luminaire	LUM HPS RWY 50W	Active	50	65485-54003	S-14	CITY OF E PROVIDENCE
0023	000	2	NARRAGANSETT	AVE	4480	Overhead	Distribution	Luminaire	LUM HPS RWY 50W TT	Temp Turn Off	50	65485-54003	S-14	CITY OF E PROVIDENCE
0025	000	2	NARRAGANSETT	AVE	4480	Overhead	Distribution	Luminaire	LUM HPS RWY 50W TT	Temp Turn Off	50	65485-54003	S-14	CITY OF E PROVIDENCE
0026	000	2	NARRAGANSETT	AVE	4480	Overhead	Distribution	Luminaire	LUM HPS RWY 50W TT	Temp Turn Off	50	65485-54003	S-14	CITY OF E PROVIDENCE
0027	000	2	NARRAGANSETT	AVE	4480	Overhead	Distribution	Luminaire	LUM HPS RWY 50W TT	Temp Turn Off	50	65485-54003	S-14	CITY OF E PROVIDENCE
0028	000	2	NARRAGANSETT	AVE	4480	Overhead	Distribution	Luminaire	LUM HPS RWY 50W	Active	50	65485-54003	S-14	CITY OF E PROVIDENCE
0029	000	2	NARRAGANSETT	AVE	4480	Overhead	Distribution	Luminaire	LUM HPS RWY 50W	Active	50	65485-54003	S-14	CITY OF E PROVIDENCE
0001	000	1	NARRAGANSETT	DR	4486	Overhead	Distribution	Luminaire	LUM HPS RWY 100W	Active	100	65485-54003	S-14	CITY OF E PROVIDENCE
0003	084	1	NARRAGANSETT	DR	4486	Overhead	Distribution	Luminaire	LUM HPS RWY 100W	Active	100	65485-54003	S-14	CITY OF E PROVIDENCE
0005	000	2	NARRAGANSETT	DR	4486	Overhead	Distribution	Luminaire	LUM HPS RWY 250W	Active	250	65485-54003	S-14	CITY OF E PROVIDENCE

Pole No	Pole Suffix	Light Sequ No	Street Name	Street Suffix	Ngrid Line No	Source Type	Pole Use	Component Type	Bill Print and Tariff Description	Billing Status	Lamp Wattage	Account No	Rate	Customer Name
0006	050	2	NARRAGANSETT	DR	4486	Overhead	Distribution	Luminaire	LUM HPS RWY 250W	Active	250	65485-54003	S-14	CITY OF E PROVIDENCE
0008	000	1	NARRAGANSETT	DR	4486	Overhead	Distribution	Luminaire	LUM HPS RWY 100W	Active	100	65485-54003	S-14	CITY OF E PROVIDENCE
0009	000	2	NARRAGANSETT	DR	4486	Overhead	Distribution	Luminaire	LUM HPS RWY 100W	Active	100	65485-54003	S-14	CITY OF E PROVIDENCE
0010	000	2	NARRAGANSETT	DR	4486	Overhead	Distribution	Luminaire	LUM HPS RWY 100W TT	Temp Turn Off	100	65485-54003	S-14	CITY OF E PROVIDENCE
0014	000	2	NARRAGANSETT	DR	4486	Overhead	Distribution	Luminaire	LUM HPS RWY 100W	Active	100	65485-54003	S-14	CITY OF E PROVIDENCE
0015	000	2	NARRAGANSETT	DR	4486	Overhead	Distribution	Luminaire	LUM HPS RWY 100W TT	Temp Turn Off	100	65485-54003	S-14	CITY OF E PROVIDENCE
0023	000	2	NARRAGANSETT	DR	4486	Overhead	Distribution	Luminaire	LUM HPS RWY 100W TT	Temp Turn Off	100	65485-54003	S-14	CITY OF E PROVIDENCE
0024	000	2	NARRAGANSETT	DR	4486	Overhead	Distribution	Luminaire	LUM HPS RWY 100W	Active	100	65485-54003	S-14	CITY OF E PROVIDENCE
0025	000	2	NARRAGANSETT	DR	4486	Overhead	Distribution	Luminaire	LUM HPS RWY 100W TT	Temp Turn Off	100	65485-54003	S-14	CITY OF E PROVIDENCE
0026	000	2	NARRAGANSETT	DR	4486	Overhead	Distribution	Luminaire	LUM HPS RWY 100W TT	Temp Turn Off	100	65485-54003	S-14	CITY OF E PROVIDENCE
0027	000	2	NARRAGANSETT	DR	4486	Overhead	Distribution	Luminaire	LUM HPS RWY 100W TT	Temp Turn Off	100	65485-54003	S-14	CITY OF E PROVIDENCE
0028	000	2	NARRAGANSETT	DR	4486	Overhead	Distribution	Luminaire	LUM HPS RWY 100W	Active	100	65485-54003	S-14	CITY OF E PROVIDENCE
0029	000	2	NARRAGANSETT	DR	4486	Overhead	Distribution	Luminaire	LUM HPS RWY 100W	Active	100	65485-54003	S-14	CITY OF E PROVIDENCE
0031	000	2	NARRAGANSETT	DR	4486	Overhead	Distribution	Luminaire	LUM HPS RWY 100W TT	Temp Turn Off	100	65485-54003	S-14	CITY OF E PROVIDENCE
0032	000	2	NARRAGANSETT	DR	4486	Overhead	Distribution	Luminaire	LUM HPS RWY 100W	Active	100	65485-54003	S-14	CITY OF E PROVIDENCE
9016	000	2	NARRAGANSETT	DR	4486	Overhead	Distribution	Luminaire	LUM HPS RWY 100W	Active	100	65485-54003	S-14	CITY OF E PROVIDENCE
9017	000	2	NARRAGANSETT	DR	4486	Overhead	Distribution	Luminaire	LUM HPS RWY 100W TT	Temp Turn Off	100	65485-54003	S-14	CITY OF E PROVIDENCE
9018	000	2	NARRAGANSETT	DR	4486	Overhead	Distribution	Luminaire	LUM HPS RWY 100W	Active	100	65485-54003	S-14	CITY OF E PROVIDENCE
9019	000	2	NARRAGANSETT	DR	4486	Overhead	Distribution	Luminaire	LUM HPS RWY 100W TT	Temp Turn Off	100	65485-54003	S-14	CITY OF E PROVIDENCE
9020	000	2	NARRAGANSETT	DR	4486	Overhead	Distribution	Luminaire	LUM HPS RWY 100W	Active	100	65485-54003	S-14	CITY OF E PROVIDENCE
9021	000	2	NARRAGANSETT	DR	4486	Overhead	Distribution	Luminaire	LUM HPS RWY 100W TT	Temp Turn Off	100	65485-54003	S-14	CITY OF E PROVIDENCE
9022	000	2	NARRAGANSETT	DR	4486	Overhead	Distribution	Luminaire	LUM HPS RWY 100W	Active	100	65485-54003	S-14	CITY OF E PROVIDENCE
0012	000	2	NASSAU	ST	4490	Overhead	Distribution	Luminaire	LUM HPS RWY 50W	Active	50	65485-54003	S-14	CITY OF E PROVIDENCE
0001	000	2	NATHANIEL	ST	4495	Overhead	Distribution	Luminaire	LUM HPS RWY 50W TT	Temp Turn Off	50	65485-54003	S-14	CITY OF E PROVIDENCE
0002	000	2	NATHANIEL	ST	4495	Overhead	Distribution	Luminaire	LUM HPS RWY 50W	Active	50	65485-54003	S-14	CITY OF E PROVIDENCE
0001	000	2	NELSON	ST	4500	Overhead	Distribution	Luminaire	LUM HPS RWY 50W	Active	50	65485-54003	S-14	CITY OF E PROVIDENCE
0003	000	2	NELSON	ST	4500	Overhead	Distribution	Luminaire	LUM HPS RWY 50W	Active	50	65485-54003	S-14	CITY OF E PROVIDENCE
0002	000	2	NEVADA	AVE	4505	Overhead	Distribution	Luminaire	LUM HPS RWY 50W	Active	50	65485-54003	S-14	CITY OF E PROVIDENCE
0004	000	2	NEVADA	AVE	4505	Overhead	Distribution	Luminaire	LUM HPS RWY 50W	Active	50	65485-54003	S-14	CITY OF E PROVIDENCE
0005	000	2	NEVADA	AVE	4505	Overhead	Distribution	Luminaire	LUM HPS RWY 50W TT	Temp Turn Off	50	90426-19008	S-14	CITY OF E PROVIDENCE
0001	000	1	NEW	RD	4510	Overhead	Distribution	Luminaire	LUM HPS RWY 50W	Active	50	65485-54003	S-14	CITY OF E PROVIDENCE
0003	000	1	NEW	RD	4510	Overhead	Distribution	Luminaire	LUM HPS RWY 50W	Active	50	65485-54003	S-14	CITY OF E PROVIDENCE
0005	000	1	NEW	RD	4510	Overhead	Distribution	Luminaire	LUM HPS RWY 50W	Active	50	65485-54003	S-14	CITY OF E PROVIDENCE
0007	000	1	NEW	RD	4510	Overhead	Distribution	Luminaire	LUM HPS RWY 50W	Active	50	65485-54003	S-14	CITY OF E PROVIDENCE
0008	000	1	NEW	RD	4510	Overhead	Distribution	Luminaire	LUM HPS RWY 50W	Active	50	65485-54003	S-14	CITY OF E PROVIDENCE
0010	000	1	NEW	RD	4510	Overhead	Distribution	Luminaire	LUM HPS RWY 50W	Active	50	65485-54003	S-14	CITY OF E PROVIDENCE
0011	000	1	NEW	RD	4510	Overhead	Distribution	Luminaire	LUM HPS RWY 50W	Active	50	65485-54003	S-14	CITY OF E PROVIDENCE
0012	000	2	NEW	RD	4510	Overhead	Distribution	Luminaire	LUM HPS RWY 50W	Active	50	90426-19008	S-14	CITY OF E PROVIDENCE
0013	000	1	NEW	RD	4510	Overhead	Distribution	Luminaire	LUM HPS RWY 50W	Active	50	65485-54003	S-14	CITY OF E PROVIDENCE
0014	000	1	NEW	RD	4510	Overhead	Distribution	Luminaire	LUM HPS RWY 50W	Active	50	65485-54003	S-14	CITY OF E PROVIDENCE
0015	000	1	NEW	RD	4510	Overhead	Distribution	Luminaire	LUM HPS RWY 50W	Active	50	65485-54003	S-14	CITY OF E PROVIDENCE
0001	000	1	NEWMAN	AVE	4515	Overhead	Distribution	Luminaire	LUM HPS RWY 100W	Active	100	65485-54003	S-14	CITY OF E PROVIDENCE
0002	000	1	NEWMAN	AVE	4515	Overhead	Distribution	Luminaire	LUM HPS RWY 100W	Active	100	65485-54003	S-14	CITY OF E PROVIDENCE
0003	000	1	NEWMAN	AVE	4515	Overhead	Distribution	Luminaire	LUM HPS RWY 100W	Active	100	65485-54003	S-14	CITY OF E PROVIDENCE
0004	000	1	NEWMAN	AVE	4515	Overhead	Distribution	Luminaire	LUM HPS RWY 50W	Active	50	65485-54003	S-14	CITY OF E PROVIDENCE
0005	000	1	NEWMAN	AVE	4515	Overhead	Distribution	Luminaire	LUM HPS RWY 100W	Active	100	65485-54003	S-14	CITY OF E PROVIDENCE
0006	000	1	NEWMAN	AVE	4515	Overhead	Distribution	Luminaire	LUM HPS RWY 100W	Active	100	65485-54003	S-14	CITY OF E PROVIDENCE
0007	000	1	NEWMAN	AVE	4515	Overhead	Distribution	Luminaire	LUM HPS RWY 50W	Active	50	65485-54003	S-14	CITY OF E PROVIDENCE
0008	000	1	NEWMAN	AVE	4515	Overhead	Distribution	Luminaire	LUM HPS RWY 100W	Active	100	65485-54003	S-14	CITY OF E PROVIDENCE
0009	000	1	NEWMAN	AVE	4515	Overhead	Distribution	Luminaire	LUM HPS RWY 100W	Active	100	65485-54003	S-14	CITY OF E PROVIDENCE
0010	000	1	NEWMAN	AVE	4515	Overhead	Distribution	Luminaire	LUM HPS RWY 100W	Active	100	65485-54003	S-14	CITY OF E PROVIDENCE
0011	000	2	NEWMAN	AVE	4515	Overhead	Distribution	Luminaire	LUM HPS RWY 250W TT	Temp Turn Off	250	65485-54003	S-14	CITY OF E PROVIDENCE
0015	050	1	NEWMAN	AVE	4515	Overhead	Distribution	Luminaire	LUM HPS RWY 100W	Active	100	65485-54003	S-14	CITY OF E PROVIDENCE
0017	000	1	NEWMAN	AVE	4515	Overhead	Distribution	Luminaire	LUM HPS RWY 100W	Active	100	65485-54003	S-14	CITY OF E PROVIDENCE
0019	000	1	NEWMAN	AVE	4515	Overhead	Distribution	Luminaire	LUM HPS RWY 100W	Active	100	65485-54003	S-14	CITY OF E PROVIDENCE

Pole No	Pole Suffix	Light Sequ No	Street Name	Street Suffix	Ngrid Line No	Source Type	Pole Use	Component Type	Bill Print and Tariff Description	Billing Status	Lamp Wattage	Account No	Rate	Customer Name
0020	000	1	NEWMAN	AVE	4515	Overhead	Distribution	Luminaire	LUM HPS RWY 100W	Active	100	65485-54003	S-14	CITY OF E PROVIDENCE
0022	000	1	NEWMAN	AVE	4515	Overhead	Distribution	Luminaire	LUM HPS RWY 100W	Active	100	65485-54003	S-14	CITY OF E PROVIDENCE
0024	000	1	NEWMAN	AVE	4515	Overhead	Distribution	Luminaire	LUM HPS RWY 100W	Active	100	65485-54003	S-14	CITY OF E PROVIDENCE
0025	000	1	NEWMAN	AVE	4515	Overhead	Distribution	Luminaire	LUM HPS RWY 100W	Active	100	65485-54003	S-14	CITY OF E PROVIDENCE
0027	000	2	NEWMAN	AVE	4515	Overhead	Distribution	Luminaire	LUM HPS RWY 250W	Active	250	65485-54003	S-14	CITY OF E PROVIDENCE
0028	000	2	NEWMAN	AVE	4515	Overhead	Distribution	Luminaire	LUM HPS RWY 250W TT	Temp Turn Off	250	65485-54003	S-14	CITY OF E PROVIDENCE
0029	000	2	NEWMAN	AVE	4515	Overhead	Distribution	Luminaire	LUM HPS RWY 250W	Active	250	65485-54003	S-14	CITY OF E PROVIDENCE
0001	000	1	NEWPORT	AVE	4520	Overhead	Distribution	Luminaire	LUM HPS RWY 100W	Active	100	65485-54003	S-14	CITY OF E PROVIDENCE
0003	000	1	NEWPORT	AVE	4520	Overhead	Distribution	Luminaire	LUM HPS RWY 100W	Active	100	65485-54003	S-14	CITY OF E PROVIDENCE
0004	050	2	NEWPORT	AVE	4520	Overhead	Distribution	Luminaire	LUM HPS RWY 250W TT	Temp Turn Off	250	65485-54003	S-14	CITY OF E PROVIDENCE
0006	000	2	NEWPORT	AVE	4520	Overhead	Distribution	Luminaire	LUM HPS RWY 250W TT	Temp Turn Off	250	65485-54003	S-14	CITY OF E PROVIDENCE
0008	000	1	NEWPORT	AVE	4520	Overhead	Distribution	Luminaire	LUM HPS FLD 400W	Inactive	400	65485-54003	S-14	CITY OF E PROVIDENCE
0008	050	2	NEWPORT	AVE	4520	Overhead	Distribution	Luminaire	LUM HPS RWY 250W TT	Temp Turn Off	250	65485-54003	S-14	CITY OF E PROVIDENCE
0009	000	2	NEWPORT	AVE	4520	Overhead	Distribution	Luminaire	LUM HPS RWY 250W TT	Temp Turn Off	250	65485-54003	S-14	CITY OF E PROVIDENCE
0012	000	1	NEWPORT	AVE	4520	Overhead	Distribution	Luminaire	LUM HPS FLD 250W	Inactive	250	65485-54003	S-14	CITY OF E PROVIDENCE
0012	050	1	NEWPORT	AVE	4520	Overhead	Distribution	Luminaire	LUM HPS RWY 100W	Active	100	65485-54003	S-14	CITY OF E PROVIDENCE
0013	000	2	NEWPORT	AVE	4520	Overhead	Distribution	Luminaire	LUM HPS RWY 250W TT	Temp Turn Off	250	65485-54003	S-14	CITY OF E PROVIDENCE
0016	000	2	NEWPORT	AVE	4520	Overhead	Distribution	Luminaire	LUM HPS RWY 250W	Active	250	65485-54003	S-14	CITY OF E PROVIDENCE
0016	050	1	NEWPORT	AVE	4520	Overhead	Distribution	Luminaire	LUM HPS RWY 100W	Active	100	65485-54003	S-14	CITY OF E PROVIDENCE
0018	000	2	NEWPORT	AVE	4520	Overhead	Distribution	Luminaire	LUM HPS RWY 250W TT	Temp Turn Off	250	65485-54003	S-14	CITY OF E PROVIDENCE
0018	050	1	NEWPORT	AVE	4520	Overhead	Distribution	Luminaire	LUM HPS RWY 100W	Active	100	65485-54003	S-14	CITY OF E PROVIDENCE
0020	000	2	NEWPORT	AVE	4520	Overhead	Distribution	Luminaire	LUM HPS RWY 250W TT	Temp Turn Off	250	65485-54003	S-14	CITY OF E PROVIDENCE
0021	000	2	NEWPORT	AVE	4520	Overhead	Distribution	Luminaire	LUM HPS RWY 250W	Active	250	65485-54003	S-14	CITY OF E PROVIDENCE
0023	050	2	NEWPORT	AVE	4520	Overhead	Distribution	Luminaire	LUM HPS RWY 100W	Active	100	65485-54003	S-14	CITY OF E PROVIDENCE
0025	000	1	NEWPORT	AVE	4520	Overhead	Distribution	Luminaire	LUM HPS RWY 100W	Active	100	65485-54003	S-14	CITY OF E PROVIDENCE
0026	084	1	NEWPORT	AVE	4520	Overhead	Distribution	Luminaire	LUM HPS RWY 100W	Active	100	65485-54003	S-14	CITY OF E PROVIDENCE
0027	000	2	NEWPORT	AVE	4520	Overhead	Distribution	Luminaire	LUM HPS RWY 250W	Active	250	65485-54003	S-14	CITY OF E PROVIDENCE
0028	000	2	NEWPORT	AVE	4520	Overhead	Distribution	Luminaire	LUM HPS RWY 250W TT	Temp Turn Off	250	65485-54003	S-14	CITY OF E PROVIDENCE
0031	000	2	NEWPORT	AVE	4520	Overhead	Distribution	Luminaire	LUM HPS RWY 250W	Active	250	65485-54003	S-14	CITY OF E PROVIDENCE
0032	000	2	NEWPORT	AVE	4520	Overhead	Distribution	Luminaire	LUM HPS RWY 250W TT	Temp Turn Off	250	65485-54003	S-14	CITY OF E PROVIDENCE
0032	050	1	NEWPORT	AVE	4520	Overhead	Distribution	Luminaire	LUM HPS RWY 100W	Active	100	65485-54003	S-14	CITY OF E PROVIDENCE
0034	000	1	NEWPORT	AVE	4520	Overhead	Distribution	Luminaire	LUM HPS RWY 100W	Inactive	100	65485-54003	S-14	CITY OF E PROVIDENCE
0037	000	1	NEWPORT	AVE	4520	Overhead	Distribution	Luminaire	LUM HPS RWY 100W	Inactive	100	65485-54003	S-14	CITY OF E PROVIDENCE
0038	050	1	NEWPORT	AVE	4520	Overhead	Distribution	Luminaire	LUM HPS RWY 100W	Inactive	100	65485-54003	S-14	CITY OF E PROVIDENCE
0001	000	2	NIMITZ	RD	4525	Overhead	Distribution	Luminaire	LUM HPS RWY 50W	Active	50	65485-54003	S-14	CITY OF E PROVIDENCE
0003	000	2	NIMITZ	RD	4525	Overhead	Distribution	Luminaire	LUM HPS RWY 50W	Active	50	65485-54003	S-14	CITY OF E PROVIDENCE
0005	000	2	NIMITZ	RD	4525	Overhead	Distribution	Luminaire	LUM HPS RWY 50W	Active	50	65485-54003	S-14	CITY OF E PROVIDENCE
0007	000	2	NIMITZ	RD	4525	Overhead	Distribution	Luminaire	LUM HPS RWY 50W	Active	50	65485-54003	S-14	CITY OF E PROVIDENCE
0009	000	2	NIMITZ	RD	4525	Overhead	Distribution	Luminaire	LUM HPS RWY 50W	Active	50	65485-54003	S-14	CITY OF E PROVIDENCE
0010	000	2	NIMITZ	RD	4525	Overhead	Distribution	Luminaire	LUM HPS RWY 50W	Active	50	65485-54003	S-14	CITY OF E PROVIDENCE
0011	000	2	NIMITZ	RD	4525	Overhead	Distribution	Luminaire	LUM HPS RWY 50W	Active	50	65485-54003	S-14	CITY OF E PROVIDENCE
0002	000	2	NINTH	ST	4530	Overhead	Distribution	Luminaire	LUM HPS RWY 50W	Active	50	65485-54003	S-14	CITY OF E PROVIDENCE
0004	000	2	NINTH	ST	4530	Overhead	Distribution	Luminaire	LUM HPS RWY 50W	Active	50	65485-54003	S-14	CITY OF E PROVIDENCE
0006	000	2	NINTH	ST	4530	Overhead	Distribution	Luminaire	LUM HPS RWY 50W	Active	50	65485-54003	S-14	CITY OF E PROVIDENCE
0008	000	2	NINTH	ST	4530	Overhead	Distribution	Luminaire	LUM HPS RWY 50W	Active	50	65485-54003	S-14	CITY OF E PROVIDENCE
0010	000	2	NINTH	ST	4530	Overhead	Distribution	Luminaire	LUM HPS RWY 50W	Active	50	65485-54003	S-14	CITY OF E PROVIDENCE
0001	000	2	NORTH	ST	4535	Overhead	Distribution	Luminaire	LUM HPS RWY 50W	Active	50	65485-54003	S-14	CITY OF E PROVIDENCE
0003	000	2	NORTH	ST	4535	Overhead	Distribution	Luminaire	LUM HPS RWY 50W	Active	50	65485-54003	S-14	CITY OF E PROVIDENCE
0004	000	2	NORTH	ST	4535	Overhead	Distribution	Luminaire	LUM HPS RWY 50W TT	Temp Turn Off	50	65485-54003	S-14	CITY OF E PROVIDENCE
0005	000	2	NORTH	ST	4535	Overhead	Distribution	Luminaire	LUM HPS RWY 50W	Active	50	65485-54003	S-14	CITY OF E PROVIDENCE
0007	000	2	NORTH	ST	4535	Overhead	Distribution	Luminaire	LUM HPS RWY 50W TT	Temp Turn Off	50	65485-54003	S-14	CITY OF E PROVIDENCE
0008	000	2	NORTH	ST	4535	Overhead	Distribution	Luminaire	LUM HPS RWY 50W	Active	50	65485-54003	S-14	CITY OF E PROVIDENCE
0009	000	2	NORTH	ST	4535	Overhead	Distribution	Luminaire	LUM HPS RWY 50W TT	Temp Turn Off	50	65485-54003	S-14	CITY OF E PROVIDENCE
0001	000	2	NORTH BLOSSOM	ST	4540	Overhead	Distribution	Luminaire	LUM HPS RWY 50W	Active	50	90426-19008	S-14	CITY OF E PROVIDENCE
0002	000	2	NORTH BLOSSOM	ST	4540	Overhead	Distribution	Luminaire	LUM HPS RWY 50W	Active	50	65485-54003	S-14	CITY OF E PROVIDENCE

Pole No	Pole Suffix	Light Sequ No	Street Name	Street Suffix	Ngrid Line No	Source Type	Pole Use	Component Type	Bill Print and Tariff Description	Billing Status	Lamp Wattage	Account No	Rate	Customer Name
0001	000	2	NORTH BROADWAY	ST	4545	Overhead	Distribution	Luminaire	LUM HPS RWY 250W	Active	250	90426-19008	S-14	CITY OF E PROVIDENCE
0036	000	2	NORTH BROADWAY	ST	4545	Overhead	Distribution	Luminaire	LUM HPS RWY 250W	Active	250	90426-19008	S-14	CITY OF E PROVIDENCE
0052	000	2	NORTH BROADWAY	ST	4545	Overhead	Distribution	Luminaire	LUM HPS RWY 250W TT	Temp Turn Off	250	65485-54003	S-14	CITY OF E PROVIDENCE
0058	000	1	NORTH BROADWAY	ST	4545	Overhead	Distribution	Luminaire	LUM HPS RWY 50W	Active	50	65485-54003	S-14	CITY OF E PROVIDENCE
0059	000	1	NORTH BROADWAY	ST	4545	Overhead	Distribution	Luminaire	LUM HPS RWY 50W	Active	50	65485-54003	S-14	CITY OF E PROVIDENCE
0061	000	1	NORTH BROADWAY	ST	4545	Overhead	Distribution	Luminaire	LUM HPS RWY 100W	Active	100	65485-54003	S-14	CITY OF E PROVIDENCE
0062	000	2	NORTH BROADWAY	ST	4545	Overhead	Distribution	Luminaire	LUM HPS RWY 100W	Active	100	65485-54003	S-14	CITY OF E PROVIDENCE
0064	000	1	NORTH BROADWAY	ST	4545	Overhead	Distribution	Luminaire	LUM HPS RWY 100W	Active	100	65485-54003	S-14	CITY OF E PROVIDENCE
0068	000	2	NORTH BROADWAY	ST	4545	Overhead	Distribution	Luminaire	LUM HPS RWY 250W TT	Temp Turn Off	250	65485-54003	S-14	CITY OF E PROVIDENCE
0070	000	1	NORTH BROADWAY	ST	4545	Overhead	Distribution	Luminaire	LUM HPS RWY 100W	Active	100	65485-54003	S-14	CITY OF E PROVIDENCE
0072	000	2	NORTH BROADWAY	ST	4545	Overhead	Distribution	Luminaire	LUM HPS RWY 250W TT	Temp Turn Off	250	90426-19008	S-14	CITY OF E PROVIDENCE
0074	000	1	NORTH BROADWAY	ST	4545	Overhead	Distribution	Luminaire	LUM HPS RWY 100W	Active	100	65485-54003	S-14	CITY OF E PROVIDENCE
0076	000	1	NORTH BROADWAY	ST	4545	Overhead	Distribution	Luminaire	LUM HPS RWY 100W	Active	100	65485-54003	S-14	CITY OF E PROVIDENCE
0078	000	2	NORTH BROADWAY	ST	4545	Overhead	Distribution	Luminaire	LUM HPS RWY 250W	Active	250	65485-54003	S-14	CITY OF E PROVIDENCE
0082	000	1	NORTH BROADWAY	ST	4545	Overhead	Distribution	Luminaire	LUM HPS RWY 100W	Active	100	65485-54003	S-14	CITY OF E PROVIDENCE
0084	050	2	NORTH BROADWAY	ST	4545	Overhead	Distribution	Luminaire	LUM HPS RWY 250W TT	Temp Turn Off	250	90426-19008	S-14	CITY OF E PROVIDENCE
0086	000	1	NORTH BROADWAY	ST	4545	Overhead	Distribution	Luminaire	LUM HPS RWY 100W	Active	100	65485-54003	S-14	CITY OF E PROVIDENCE
0090	000	2	NORTH BROADWAY	ST	4545	Overhead	Distribution	Luminaire	LUM HPS RWY 250W TT	Temp Turn Off	250	90426-19008	S-14	CITY OF E PROVIDENCE
0096	000	2	NORTH BROADWAY	ST	4545	Overhead	Distribution	Luminaire	LUM HPS RWY 250W TT	Temp Turn Off	250	65485-54003	S-14	CITY OF E PROVIDENCE
0098	000	1	NORTH BROADWAY	ST	4545	Overhead	Distribution	Luminaire	LUM HPS RWY 100W	Active	100	65485-54003	S-14	CITY OF E PROVIDENCE
0112	000	2	NORTH BROADWAY	ST	4545	Overhead	Distribution	Luminaire	LUM HPS RWY 250W TT	Temp Turn Off	250	65485-54003	S-14	CITY OF E PROVIDENCE
0116	000	1	NORTH BROADWAY	ST	4545	Overhead	Distribution	Luminaire	LUM HPS RWY 100W	Active	100	65485-54003	S-14	CITY OF E PROVIDENCE
0120	000	1	NORTH BROADWAY	ST	4545	Overhead	Distribution	Luminaire	LUM HPS RWY 100W	Active	100	65485-54003	S-14	CITY OF E PROVIDENCE
0122	000	1	NORTH BROADWAY	ST	4545	Overhead	Distribution	Luminaire	LUM HPS RWY 100W	Active	100	65485-54003	S-14	CITY OF E PROVIDENCE
0124	000	1	NORTH BROADWAY	ST	4545	Overhead	Distribution	Luminaire	LUM HPS RWY 100W	Active	100	65485-54003	S-14	CITY OF E PROVIDENCE
0126	000	1	NORTH BROADWAY	ST	4545	Overhead	Distribution	Luminaire	LUM HPS RWY 100W	Active	100	65485-54003	S-14	CITY OF E PROVIDENCE
0130	000	1	NORTH BROADWAY	ST	4545	Overhead	Distribution	Luminaire	LUM HPS RWY 100W	Active	100	65485-54003	S-14	CITY OF E PROVIDENCE
0131	000	2	NORTH BROADWAY	ST	4545	Overhead	Distribution	Luminaire	LUM HPS RWY 250W TT	Temp Turn Off	250	90426-19008	S-14	CITY OF E PROVIDENCE
0132	000	1	NORTH BROADWAY	ST	4545	Overhead	Distribution	Luminaire	LUM HPS RWY 100W	Active	100	65485-54003	S-14	CITY OF E PROVIDENCE
0134	000	1	NORTH BROADWAY	ST	4545	Overhead	Distribution	Luminaire	LUM HPS RWY 100W	Active	100	65485-54003	S-14	CITY OF E PROVIDENCE
0138	000	2	NORTH BROADWAY	ST	4545	Overhead	Distribution	Luminaire	LUM HPS RWY 250W TT	Temp Turn Off	250	90426-19008	S-14	CITY OF E PROVIDENCE
0139	035	2	NORTH BROADWAY	ST	4545	Overhead	Distribution	Luminaire	LUM HPS RWY 250W	Active	250	65485-54003	S-14	CITY OF E PROVIDENCE
0140	000	1	NORTH BROADWAY	ST	4545	Overhead	Distribution	Luminaire	LUM HPS RWY 100W	Active	100	65485-54003	S-14	CITY OF E PROVIDENCE
0144	000	2	NORTH BROADWAY	ST	4545	Overhead	Distribution	Luminaire	LUM HPS RWY 250W TT	Temp Turn Off	250	90426-19008	S-14	CITY OF E PROVIDENCE
0148	000	1	NORTH BROADWAY	ST	4545	Overhead	Distribution	Luminaire	LUM HPS RWY 100W	Active	100	65485-54003	S-14	CITY OF E PROVIDENCE
0152	000	2	NORTH BROADWAY	ST	4545	Overhead	Distribution	Luminaire	LUM HPS RWY 250W	Active	250	65485-54003	S-14	CITY OF E PROVIDENCE
0154	000	2	NORTH BROADWAY	ST	4545	Overhead	Distribution	Luminaire	LUM HPS RWY 250W TT	Temp Turn Off	250	90426-19008	S-14	CITY OF E PROVIDENCE
0156	000	1	NORTH BROADWAY	ST	4545	Overhead	Distribution	Luminaire	LUM HPS RWY 100W	Active	100	65485-54003	S-14	CITY OF E PROVIDENCE
0158	000	1	NORTH BROADWAY	ST	4545	Overhead	Distribution	Luminaire	LUM HPS RWY 100W	Active	100	65485-54003	S-14	CITY OF E PROVIDENCE
0160	000	2	NORTH BROADWAY	ST	4545	Overhead	Distribution	Luminaire	LUM HPS RWY 250W TT	Temp Turn Off	250	65485-54003	S-14	CITY OF E PROVIDENCE
0162	000	1	NORTH BROADWAY	ST	4545	Overhead	Distribution	Luminaire	LUM HPS RWY 100W	Active	100	65485-54003	S-14	CITY OF E PROVIDENCE
0164	000	1	NORTH BROADWAY	ST	4545	Overhead	Distribution	Luminaire	LUM HPS RWY 100W	Active	100	65485-54003	S-14	CITY OF E PROVIDENCE
0167	000	1	NORTH BROADWAY	ST	4545	Overhead	Distribution	Luminaire	LUM HPS RWY 100W	Active	100	65485-54003	S-14	CITY OF E PROVIDENCE
0169	000	1	NORTH BROADWAY	ST	4545	Overhead	Distribution	Luminaire	LUM HPS RWY 100W	Active	100	65485-54003	S-14	CITY OF E PROVIDENCE
0173	000	1	NORTH BROADWAY	ST	4545	Overhead	Distribution	Luminaire	LUM HPS RWY 100W	Active	100	65485-54003	S-14	CITY OF E PROVIDENCE
0175	000	2	NORTH BROADWAY	ST	4545	Overhead	Distribution	Luminaire	LUM HPS RWY 250W TT	Temp Turn Off	250	65485-54003	S-14	CITY OF E PROVIDENCE
0180	000	1	NORTH BROADWAY	ST	4545	Overhead	Distribution	Luminaire	LUM HPS RWY 100W	Active	100	65485-54003	S-14	CITY OF E PROVIDENCE
0182	000	2	NORTH BROADWAY	ST	4545	Overhead	Distribution	Luminaire	LUM HPS RWY 50W TT	Temp Turn Off	50	65485-54003	S-14	CITY OF E PROVIDENCE
0183	000	1	NORTH BROADWAY	ST	4545	Overhead	Distribution	Luminaire	LUM HPS RWY 100W	Active	100	65485-54003	S-14	CITY OF E PROVIDENCE
0186	000	2	NORTH BROADWAY	ST	4545	Overhead	Distribution	Luminaire	LUM HPS RWY 250W	Active	250	65485-54003	S-14	CITY OF E PROVIDENCE
0188	000	1	NORTH BROADWAY	ST	4545	Overhead	Distribution	Luminaire	LUM HPS RWY 100W	Active	100	65485-54003	S-14	CITY OF E PROVIDENCE
0190	000	1	NORTH BROADWAY	ST	4545	Overhead	Distribution	Luminaire	LUM HPS RWY 100W	Active	100	65485-54003	S-14	CITY OF E PROVIDENCE
0192	000	1	NORTH BROADWAY	ST	4545	Overhead	Distribution	Luminaire	LUM HPS RWY 100W	Active	100	65485-54003	S-14	CITY OF E PROVIDENCE
0194	000	1	NORTH BROADWAY	ST	4545	Overhead	Distribution	Luminaire	LUM HPS RWY 100W	Active	100	65485-54003	S-14	CITY OF E PROVIDENCE
0196	000	1	NORTH BROADWAY	ST	4545	Overhead	Distribution	Luminaire	LUM HPS RWY 100W	Active	100	65485-54003	S-14	CITY OF E PROVIDENCE

Pole No	Pole Suffix	Light Sequ No	Street Name	Street Suffix	Ngrid Line No	Source Type	Pole Use	Component Type	Bill Print and Tariff Description	Billing Status	Lamp Wattage	Account No	Rate	Customer Name
0198	000	1	NORTH BROADWAY	ST	4545	Overhead	Distribution	Luminaire	LUM HPS RWY 100W	Active	100	65485-54003	S-14	CITY OF E PROVIDENCE
0199	050	1	NORTH BROADWAY	ST	4545	Overhead	Distribution	Luminaire	LUM HPS RWY 100W	Active	100	65485-54003	S-14	CITY OF E PROVIDENCE
9000	050	1	NORTH BROW	ST	4546	Overhead	Distribution	Luminaire	LUM HPS RWY 250W	Inactive	250	65485-54003	S-14	CITY OF E PROVIDENCE
9001	000	2	NORTH BROW	ST	4546	Overhead	Distribution	Luminaire	LUM HPS RWY 50W	Active	50	65485-54003	S-14	CITY OF E PROVIDENCE
9003	000	1	NORTH BROW	ST	4546	Overhead	Distribution	Luminaire	LUM HPS RWY 50W	Inactive	50	65485-54003	S-14	CITY OF E PROVIDENCE
9004	000	2	NORTH BROW	ST	4546	Overhead	Distribution	Luminaire	LUM HPS RWY 50W TT	Temp Turn Off	50	65485-54003	S-14	CITY OF E PROVIDENCE
9005	000	1	NORTH BROW	ST	4546	Overhead	Distribution	Luminaire	LUM HPS RWY 50W	Inactive	50	65485-54003	S-14	CITY OF E PROVIDENCE
9006	000	2	NORTH BROW	ST	4546	Overhead	Distribution	Luminaire	LUM HPS RWY 50W TT	Temp Turn Off	50	65485-54003	S-14	CITY OF E PROVIDENCE
9007	000	1	NORTH BROW	ST	4546	Overhead	Distribution	Luminaire	LUM HPS RWY 50W	Active	50	65485-54003	S-14	CITY OF E PROVIDENCE
9009	000	2	NORTH BROW	ST	4546	Overhead	Distribution	Luminaire	LUM HPS RWY 50W	Active	50	90426-19008	S-14	CITY OF E PROVIDENCE
9011	000	1	NORTH BROW	ST	4546	Overhead	Distribution	Luminaire	LUM HPS RWY 50W	Inactive	50	65485-54003	S-14	CITY OF E PROVIDENCE
0005	000	2	NORTH CARPENTER	ST	675	Overhead	Distribution	Luminaire	LUM HPS RWY 50W	Active	50	65485-54003	S-14	CITY OF E PROVIDENCE
0006	000	2	NORTH CARPENTER	ST	675	Overhead	Distribution	Luminaire	LUM HPS RWY 50W	Active	50	65485-54003	S-14	CITY OF E PROVIDENCE
0007	000	2	NORTH CARPENTER	ST	675	Overhead	Distribution	Luminaire	LUM HPS RWY 50W TT	Temp Turn Off	50	65485-54003	S-14	CITY OF E PROVIDENCE
0008	000	2	NORTH CARPENTER	ST	675	Overhead	Distribution	Luminaire	LUM HPS RWY 50W	Active	50	65485-54003	S-14	CITY OF E PROVIDENCE
0009	000	1	NORTH CARPENTER	ST	675	Overhead	Distribution	Luminaire	LUM HPS RWY 50W	Active	50	65485-54003	S-14	CITY OF E PROVIDENCE
0010	000	2	NORTH CARPENTER	ST	675	Overhead	Distribution	Luminaire	LUM HPS RWY 50W TT	Temp Turn Off	50	65485-54003	S-14	CITY OF E PROVIDENCE
0011	000	2	NORTH CARPENTER	ST	675	Overhead	Distribution	Luminaire	LUM HPS RWY 50W	Active	50	65485-54003	S-14	CITY OF E PROVIDENCE
0001	000	2	NORTH COUNTY	ST	4549	Overhead	Distribution	Luminaire	LUM HPS RWY 50W TT	Temp Turn Off	50	65485-54003	S-14	CITY OF E PROVIDENCE
0003	000	2	NORTH COUNTY	ST	4549	Overhead	Distribution	Luminaire	LUM HPS RWY 50W	Active	50	65485-54003	S-14	CITY OF E PROVIDENCE
0005	000	2	NORTH COUNTY	ST	4549	Overhead	Distribution	Luminaire	LUM HPS RWY 50W	Active	50	65485-54003	S-14	CITY OF E PROVIDENCE
0007	000	2	NORTH COUNTY	ST	4549	Overhead	Distribution	Luminaire	LUM HPS RWY 50W TT	Temp Turn Off	50	65485-54003	S-14	CITY OF E PROVIDENCE
0008	000	2	NORTH COUNTY	ST	4549	Overhead	Distribution	Luminaire	LUM HPS RWY 50W	Active	50	65485-54003	S-14	CITY OF E PROVIDENCE
0010	000	2	NORTH COUNTY	ST	4549	Overhead	Distribution	Luminaire	LUM HPS RWY 50W	Active	50	65485-54003	S-14	CITY OF E PROVIDENCE
0011	000	2	NORTH COUNTY	ST	4549	Overhead	Distribution	Luminaire	LUM HPS RWY 50W TT	Temp Turn Off	50	65485-54003	S-14	CITY OF E PROVIDENCE
0012	000	2	NORTH COUNTY	ST	4549	Overhead	Distribution	Luminaire	LUM HPS RWY 50W	Active	50	65485-54003	S-14	CITY OF E PROVIDENCE
0014	000	1	NORTH COUNTY	ST	4549	Overhead	Distribution	Luminaire	LUM HPS RWY 50W	Active	50	65485-54003	S-14	CITY OF E PROVIDENCE
0016	000	1	NORTH COUNTY	ST	4549	Overhead	Distribution	Luminaire	LUM HPS RWY 50W	Active	50	65485-54003	S-14	CITY OF E PROVIDENCE
0018	000	2	NORTH COUNTY	ST	4549	Overhead	Distribution	Luminaire	LUM HPS RWY 100W	Active	100	65485-54003	S-14	CITY OF E PROVIDENCE
0020	000	1	NORTH COUNTY	ST	4549	Overhead	Distribution	Luminaire	LUM HPS RWY 50W	Active	50	65485-54003	S-14	CITY OF E PROVIDENCE
0021	000	1	NORTH COUNTY	ST	4549	Overhead	Distribution	Luminaire	LUM HPS RWY 50W	Active	50	65485-54003	S-14	CITY OF E PROVIDENCE
0022	000	1	NORTH COUNTY	ST	4549	Overhead	Distribution	Luminaire	LUM HPS RWY 50W	Active	50	65485-54003	S-14	CITY OF E PROVIDENCE
0023	000	2	NORTH COUNTY	ST	4549	Overhead	Distribution	Luminaire	LUM HPS RWY 50W	Active	50	65485-54003	S-14	CITY OF E PROVIDENCE
0024	000	2	NORTH COUNTY	ST	4549	Overhead	Distribution	Luminaire	LUM HPS RWY 50W	Active	50	65485-54003	S-14	CITY OF E PROVIDENCE
0025	000	2	NORTH COUNTY	ST	4549	Overhead	Distribution	Luminaire	LUM HPS RWY 50W	Active	50	65485-54003	S-14	CITY OF E PROVIDENCE
0001	000	2	NORTH HULL	ST	4550	Overhead	Distribution	Luminaire	LUM HPS RWY 50W	Active	50	65485-54003	S-14	CITY OF E PROVIDENCE
0003	000	2	NORTH HULL	ST	4550	Overhead	Distribution	Luminaire	LUM HPS RWY 50W	Active	50	65485-54003	S-14	CITY OF E PROVIDENCE
0005	000	2	NORTH HULL	ST	4550	Overhead	Distribution	Luminaire	LUM HPS RWY 50W	Active	50	65485-54003	S-14	CITY OF E PROVIDENCE
0007	000	1	NORTH HULL	ST	4550	Overhead	Distribution	Luminaire	LUM HPS RWY 50W	Active	50	65485-54003	S-14	CITY OF E PROVIDENCE
0007	050	2	NORTH HULL	ST	4550	Overhead	Distribution	Luminaire	LUM HPS RWY 50W	Active	50	65485-54003	S-14	CITY OF E PROVIDENCE
0008	000	2	NORTH HULL	ST	4550	Overhead	Distribution	Luminaire	LUM HPS RWY 50W TT	Temp Turn Off	50	65485-54003	S-14	CITY OF E PROVIDENCE
0009	000	2	NORTH HULL	ST	4550	Overhead	Distribution	Luminaire	LUM HPS RWY 50W	Active	50	65485-54003	S-14	CITY OF E PROVIDENCE
0010	000	2	NORTH HULL	ST	4550	Overhead	Distribution	Luminaire	LUM HPS RWY 50W TT	Temp Turn Off	50	65485-54003	S-14	CITY OF E PROVIDENCE
0011	000	2	NORTH HULL	ST	4550	Overhead	Distribution	Luminaire	LUM HPS RWY 50W	Active	50	65485-54003	S-14	CITY OF E PROVIDENCE
0012	000	2	NORTH HULL	ST	4550	Overhead	Distribution	Luminaire	LUM HPS RWY 50W TT	Temp Turn Off	50	65485-54003	S-14	CITY OF E PROVIDENCE
0013	000	2	NORTH HULL	ST	4550	Overhead	Distribution	Luminaire	LUM HPS RWY 50W	Active	50	65485-54003	S-14	CITY OF E PROVIDENCE
0014	000	2	NORTH HULL	ST	4550	Overhead	Distribution	Luminaire	LUM HPS RWY 50W	Active	50	65485-54003	S-14	CITY OF E PROVIDENCE
0007	000	2	NORTH PHILLIP	ST	4760	Overhead	Distribution	Luminaire	LUM HPS RWY 50W	Active	50	65485-54003	S-14	CITY OF E PROVIDENCE
0008	000	2	NORTH PHILLIP	ST	4760	Overhead	Distribution	Luminaire	LUM HPS RWY 50W TT	Temp Turn Off	50	65485-54003	S-14	CITY OF E PROVIDENCE
0007	000	2	NORTH PROSPEC	ST	4930	Overhead	Distribution	Luminaire	LUM HPS RWY 50W	Active	50	65485-54003	S-14	CITY OF E PROVIDENCE
0008	000	2	NORTH PROSPEC	ST	4930	Overhead	Distribution	Luminaire	LUM HPS RWY 50W TT	Temp Turn Off	50	65485-54003	S-14	CITY OF E PROVIDENCE
0000	050	2	NORTH REVERE	ST	4557	Overhead	Distribution	Luminaire	LUM HPS RWY 50W	Active	50	65485-54003	S-14	CITY OF E PROVIDENCE
9011	000	2	NORTH ROSE	ST	4555	Overhead	Distribution	Luminaire	LUM HPS RWY 50W	Active	50	90426-19008	S-14	CITY OF E PROVIDENCE
9013	000	2	NORTH ROSE	ST	4555	Overhead	Distribution	Luminaire	LUM HPS RWY 50W TT	Temp Turn Off	50	65485-54003	S-14	CITY OF E PROVIDENCE
9014	000	2	NORTH ROSE	ST	4555	Overhead	Distribution	Luminaire	LUM HPS RWY 50W	Active	50	65485-54003	S-14	CITY OF E PROVIDENCE

Pole No	Pole Suffix	Light Sequ No	Street Name	Street Suffix	Ngrid Line No	Source Type	Pole Use	Component Type	Bill Print and Tariff Description	Billing Status	Lamp Wattage	Account No	Rate	Customer Name
0005	000	1	NORTH SHARON	ST	4548	Overhead	Distribution	Luminaire	LUM HPS RWY 50W	Active	50	90426-19008	S-14	CITY OF E PROVIDENCE
0002	000	2	NORTH SHORE	DR	4560	Overhead	Distribution	Luminaire	LUM HPS RWY 50W	Active	50	65485-54003	S-14	CITY OF E PROVIDENCE
0003	000	1	NORTH SPRUCE	ST	4565	Overhead	Distribution	Luminaire	LUM HPS RWY 50W	Inactive	50	65485-54003	S-14	CITY OF E PROVIDENCE
0004	000	1	NORTH SPRUCE	ST	4565	Overhead	Distribution	Luminaire	LUM HPS RWY 50W	Inactive	50	65485-54003	S-14	CITY OF E PROVIDENCE
0001	000	2	NORTON	ST	4570	Overhead	Distribution	Luminaire	LUM HPS RWY 50W	Active	50	90426-19008	S-14	CITY OF E PROVIDENCE
0002	000	2	NORTON	ST	4570	Overhead	Distribution	Luminaire	LUM HPS RWY 50W TT	Temp Turn Off	50	65485-54003	S-14	CITY OF E PROVIDENCE
0004	000	2	NORTON	ST	4570	Overhead	Distribution	Luminaire	LUM HPS RWY 50W	Active	50	65485-54003	S-14	CITY OF E PROVIDENCE
0006	000	2	NORTON	ST	4570	Overhead	Distribution	Luminaire	LUM HPS RWY 50W TT	Temp Turn Off	50	65485-54003	S-14	CITY OF E PROVIDENCE
0008	000	2	NORTON	ST	4570	Overhead	Distribution	Luminaire	LUM HPS RWY 50W	Active	50	65485-54003	S-14	CITY OF E PROVIDENCE
0010	000	2	NORTON	ST	4570	Overhead	Distribution	Luminaire	LUM HPS RWY 50W	Active	50	65485-54003	S-14	CITY OF E PROVIDENCE
0001	000	2	OAK	AVE	4585	Overhead	Distribution	Luminaire	LUM HPS RWY 50W	Active	50	65485-54003	S-14	CITY OF E PROVIDENCE
0002	000	2	OAK	AVE	4585	Overhead	Distribution	Luminaire	LUM HPS RWY 50W	Active	50	65485-54003	S-14	CITY OF E PROVIDENCE
0004	000	2	OAK	AVE	4585	Overhead	Distribution	Luminaire	LUM HPS RWY 50W	Active	50	65485-54003	S-14	CITY OF E PROVIDENCE
0006	000	2	OAK	AVE	4585	Overhead	Distribution	Luminaire	LUM HPS RWY 50W	Active	50	65485-54003	S-14	CITY OF E PROVIDENCE
0008	000	2	OAK	AVE	4585	Overhead	Distribution	Luminaire	LUM HPS RWY 50W	Active	50	65485-54003	S-14	CITY OF E PROVIDENCE
0010	000	2	OAK	AVE	4585	Overhead	Distribution	Luminaire	LUM HPS RWY 50W	Active	50	65485-54003	S-14	CITY OF E PROVIDENCE
0012	000	2	OAK	AVE	4585	Overhead	Distribution	Luminaire	LUM HPS RWY 50W	Active	50	65485-54003	S-14	CITY OF E PROVIDENCE
0001	000	2	OAK CREST	DR	4590	Overhead	Distribution	Luminaire	LUM HPS RWY 50W	Active	50	65485-54003	S-14	CITY OF E PROVIDENCE
0003	000	2	OAK CREST	DR	4590	Overhead	Distribution	Luminaire	LUM HPS RWY 50W	Active	50	65485-54003	S-14	CITY OF E PROVIDENCE
0006	000	2	OAK CREST	DR	4590	Overhead	Distribution	Luminaire	LUM HPS RWY 50W	Active	50	65485-54003	S-14	CITY OF E PROVIDENCE
0007	000	2	OAK CREST	DR	4590	Overhead	Distribution	Luminaire	LUM HPS RWY 50W TT	Temp Turn Off	50	65485-54003	S-14	CITY OF E PROVIDENCE
0009	000	2	OAK CREST	DR	4590	Overhead	Distribution	Luminaire	LUM HPS RWY 50W	Active	50	65485-54003	S-14	CITY OF E PROVIDENCE
0010	000	2	OAK CREST	DR	4590	Overhead	Distribution	Luminaire	LUM HPS RWY 50W	Active	50	65485-54003	S-14	CITY OF E PROVIDENCE
0011	000	2	OAK CREST	DR	4590	Overhead	Distribution	Luminaire	LUM HPS RWY 50W TT	Temp Turn Off	50	65485-54003	S-14	CITY OF E PROVIDENCE
0013	000	2	OAK CREST	DR	4590	Overhead	Distribution	Luminaire	LUM HPS RWY 50W	Active	50	65485-54003	S-14	CITY OF E PROVIDENCE
0003	000	2	OAKLEY	ST	4595	Overhead	Distribution	Luminaire	LUM HPS RWY 50W	Active	50	65485-54003	S-14	CITY OF E PROVIDENCE
0006	000	2	OAKLEY	ST	4595	Overhead	Distribution	Luminaire	LUM HPS RWY 50W	Active	50	90426-19008	S-14	CITY OF E PROVIDENCE
0009	000	2	OAKLEY	ST	4595	Overhead	Distribution	Luminaire	LUM HPS RWY 50W	Active	50	65485-54003	S-14	CITY OF E PROVIDENCE
0001	000	2	OAKWOOD	ST	4600	Overhead	Distribution	Luminaire	LUM HPS RWY 50W TT	Temp Turn Off	50	65485-54003	S-14	CITY OF E PROVIDENCE
0002	000	2	OAKWOOD	ST	4600	Overhead	Distribution	Luminaire	LUM HPS RWY 50W	Active	50	65485-54003	S-14	CITY OF E PROVIDENCE
0001	000	2	OCEAN	AVE	4605	Overhead	Distribution	Luminaire	LUM HPS RWY 50W	Active	50	90426-19008	S-14	CITY OF E PROVIDENCE
0016	000	2	OFFICE	PKWY	4607	Overhead	Distribution	Luminaire	LUM HPS RWY 50W	Active	50	90426-19008	S-14	CITY OF E PROVIDENCE
0018	000	2	OFFICE	PKWY	4607	Overhead	Distribution	Luminaire	LUM HPS RWY 50W	Active	50	90426-19008	S-14	CITY OF E PROVIDENCE
0019	000	2	OFFICE	PKWY	4607	Overhead	Distribution	Luminaire	LUM HPS RWY 50W	Active	50	90426-19008	S-14	CITY OF E PROVIDENCE
0020	000	2	OFFICE	PKWY	4607	Overhead	Distribution	Luminaire	LUM HPS RWY 50W	Active	50	90426-19008	S-14	CITY OF E PROVIDENCE
0022	000	2	OFFICE	PKWY	4607	Overhead	Distribution	Luminaire	LUM HPS RWY 50W	Active	50	90426-19008	S-14	CITY OF E PROVIDENCE
0000	050	2	OLD BARRINGTON	RD	4610	Overhead	Distribution	Luminaire	LUM INC RWY 105W TT	Temp Turn Off	105	65485-54003	S-14	CITY OF E PROVIDENCE
0118	000	2	OLD BARRINGTON	RD	4610	Overhead	Distribution	Luminaire	LUM HPS RWY 50W TT	Temp Turn Off	50	90426-19008	S-14	CITY OF E PROVIDENCE
0002	000	2	ORANGE	ST	4620	Overhead	Distribution	Luminaire	LUM HPS RWY 50W	Active	50	65485-54003	S-14	CITY OF E PROVIDENCE
0005	000	2	ORANGE	ST	4620	Overhead	Distribution	Luminaire	LUM HPS RWY 50W TT	Temp Turn Off	50	65485-54003	S-14	CITY OF E PROVIDENCE
0006	000	2	ORANGE	ST	4620	Overhead	Distribution	Luminaire	LUM HPS RWY 50W	Active	50	65485-54003	S-14	CITY OF E PROVIDENCE
0001	000	2	ORCHARD	ST	4625	Overhead	Distribution	Luminaire	LUM HPS RWY 100W	Active	100	65485-54003	S-14	CITY OF E PROVIDENCE
0003	000	2	ORCHARD	ST	4625	Overhead	Distribution	Luminaire	LUM HPS RWY 100W	Active	100	65485-54003	S-14	CITY OF E PROVIDENCE
0004	000	2	ORCHARD	ST	4625	Overhead	Distribution	Luminaire	LUM HPS RWY 100W TT	Temp Turn Off	100	65485-54003	S-14	CITY OF E PROVIDENCE
0007	000	2	ORCHARD	ST	4625	Overhead	Distribution	Luminaire	LUM HPS RWY 100W	Active	100	65485-54003	S-14	CITY OF E PROVIDENCE
0010	000	2	ORCHARD	ST	4625	Overhead	Distribution	Luminaire	LUM HPS RWY 100W	Active	100	65485-54003	S-14	CITY OF E PROVIDENCE
0012	000	2	ORCHARD	ST	4625	Overhead	Distribution	Luminaire	LUM HPS RWY 100W	Active	100	65485-54003	S-14	CITY OF E PROVIDENCE
0012	000	3	ORCHARD	ST	4625	Overhead	Distribution	Luminaire	LUM HPS FLD 250W	Active	250	53023-57003	S-10	CITY OF E PROVIDENCE
0012	000	4	ORCHARD	ST	4625	Overhead	Distribution	Luminaire	LUM HPS FLD 250W	Active	250	53023-57003	S-10	CITY OF E PROVIDENCE
0015	000	2	ORCHARD	ST	4625	Overhead	Distribution	Luminaire	LUM HPS RWY 100W	Active	100	65485-54003	S-14	CITY OF E PROVIDENCE
0017	000	2	ORCHARD	ST	4625	Overhead	Distribution	Luminaire	LUM HPS RWY 50W	Active	50	65485-54003	S-14	CITY OF E PROVIDENCE
0018	000	2	ORCHARD	ST	4625	Overhead	Distribution	Luminaire	LUM HPS RWY 50W	Active	50	65485-54003	S-14	CITY OF E PROVIDENCE
0018	050	2	ORCHARD	ST	4625	Overhead	Distribution	Luminaire	LUM HPS RWY 100W	Active	100	65485-54003	S-14	CITY OF E PROVIDENCE
0020	000	2	ORCHARD	ST	4625	Overhead	Distribution	Luminaire	LUM HPS RWY 50W	Active	50	65485-54003	S-14	CITY OF E PROVIDENCE
0021	000	2	ORCHARD	ST	4625	Overhead	Distribution	Luminaire	LUM HPS RWY 100W	Active	100	65485-54003	S-14	CITY OF E PROVIDENCE

Pole No	Pole Suffix	Light Sequ No	Street Name	Street Suffix	Ngrid Line No	Source Type	Pole Use	Component Type	Bill Print and Tariff Description	Billing Status	Lamp Wattage	Account No	Rate	Customer Name
0022	000	2	ORCHARD	ST	4625	Overhead	Distribution	Luminaire	LUM HPS RWY 100W	Active	100	65485-54003	S-14	CITY OF E PROVIDENCE
0024	000	2	ORCHARD	ST	4625	Overhead	Distribution	Luminaire	LUM HPS RWY 100W	Active	100	65485-54003	S-14	CITY OF E PROVIDENCE
0026	000	2	ORCHARD	ST	4625	Overhead	Distribution	Luminaire	LUM HPS RWY 100W	Active	100	65485-54003	S-14	CITY OF E PROVIDENCE
0001	000	2	ORIOLE	ST	4635	Overhead	Distribution	Luminaire	LUM HPS RWY 50W	Active	50	65485-54003	S-14	CITY OF E PROVIDENCE
0002	000	2	ORLO	AVE	4640	Overhead	Distribution	Luminaire	LUM HPS RWY 50W	Active	50	65485-54003	S-14	CITY OF E PROVIDENCE
0004	000	2	ORLO	AVE	4640	Overhead	Distribution	Luminaire	LUM HPS RWY 50W	Active	50	65485-54003	S-14	CITY OF E PROVIDENCE
0005	000	2	ORLO	AVE	4640	Overhead	Distribution	Luminaire	LUM HPS RWY 50W	Active	50	65485-54003	S-14	CITY OF E PROVIDENCE
0007	000	2	ORLO	AVE	4640	Overhead	Distribution	Luminaire	LUM HPS RWY 50W	Active	50	65485-54003	S-14	CITY OF E PROVIDENCE
0009	000	2	ORLO	AVE	4640	Overhead	Distribution	Luminaire	LUM HPS RWY 50W	Active	50	65485-54003	S-14	CITY OF E PROVIDENCE
0001	050	2	ORMOND	DR	4645	Overhead	Distribution	Luminaire	LUM HPS RWY 50W	Active	50	65485-54003	S-14	CITY OF E PROVIDENCE
0002	000	2	ORMOND	DR	4645	Overhead	Distribution	Luminaire	LUM HPS RWY 50W	Active	50	65485-54003	S-14	CITY OF E PROVIDENCE
0001	000	2	OUTLOOK	AVE	4650	Overhead	Distribution	Luminaire	LUM HPS RWY 50W	Active	50	65485-54003	S-14	CITY OF E PROVIDENCE
0002	000	2	OUTLOOK	AVE	4650	Overhead	Distribution	Luminaire	LUM HPS RWY 50W TT	Temp Turn Off	50	65485-54003	S-14	CITY OF E PROVIDENCE
0003	000	2	OUTLOOK	AVE	4650	Overhead	Distribution	Luminaire	LUM HPS RWY 50W	Active	50	65485-54003	S-14	CITY OF E PROVIDENCE
0005	000	2	OUTLOOK	AVE	4650	Overhead	Distribution	Luminaire	LUM HPS RWY 50W TT	Temp Turn Off	50	65485-54003	S-14	CITY OF E PROVIDENCE
0006	000	2	OUTLOOK	AVE	4650	Overhead	Distribution	Luminaire	LUM HPS RWY 50W	Active	50	65485-54003	S-14	CITY OF E PROVIDENCE
0001	000	2	OXFORD	ST	4655	Overhead	Distribution	Luminaire	LUM HPS RWY 50W TT	Temp Turn Off	50	65485-54003	S-14	CITY OF E PROVIDENCE
0002	000	2	OXFORD	ST	4655	Overhead	Distribution	Luminaire	LUM HPS RWY 50W	Active	50	65485-54003	S-14	CITY OF E PROVIDENCE
0004	000	2	OXFORD	ST	4655	Overhead	Distribution	Luminaire	LUM HPS RWY 100W	Active	100	65485-54003	S-14	CITY OF E PROVIDENCE
0006	000	2	OXFORD	ST	4655	Overhead	Distribution	Luminaire	LUM HPS RWY 50W	Active	50	65485-54003	S-14	CITY OF E PROVIDENCE
0008	000	2	OXFORD	ST	4655	Overhead	Distribution	Luminaire	LUM HPS RWY 100W	Active	100	65485-54003	S-14	CITY OF E PROVIDENCE
0001	000	2	PADELFORD	AVE	4665	Overhead	Distribution	Luminaire	LUM HPS RWY 50W	Active	50	65485-54003	S-14	CITY OF E PROVIDENCE
0002	000	2	PADELFORD	AVE	4665	Overhead	Distribution	Luminaire	LUM HPS RWY 50W	Active	50	65485-54003	S-14	CITY OF E PROVIDENCE
0005	000	2	PADELFORD	AVE	4665	Overhead	Distribution	Luminaire	LUM HPS RWY 50W	Active	50	65485-54003	S-14	CITY OF E PROVIDENCE
0006	000	2	PADELFORD	AVE	4665	Overhead	Distribution	Luminaire	LUM HPS RWY 50W	Active	50	65485-54003	S-14	CITY OF E PROVIDENCE
0007	000	2	PADELFORD	AVE	4665	Overhead	Distribution	Luminaire	LUM HPS RWY 50W TT	Temp Turn Off	50	65485-54003	S-14	CITY OF E PROVIDENCE
0008	000	2	PADELFORD	AVE	4665	Overhead	Distribution	Luminaire	LUM HPS RWY 50W	Active	50	65485-54003	S-14	CITY OF E PROVIDENCE
0002	000	2	PALMER	AVE	4670	Overhead	Distribution	Luminaire	LUM HPS RWY 50W	Active	50	65485-54003	S-14	CITY OF E PROVIDENCE
0003	000	2	PALMER	AVE	4670	Overhead	Distribution	Luminaire	LUM HPS RWY 50W	Active	50	65485-54003	S-14	CITY OF E PROVIDENCE
0006	000	2	PALMER	AVE	4670	Overhead	Distribution	Luminaire	LUM HPS RWY 50W	Active	50	65485-54003	S-14	CITY OF E PROVIDENCE
0009	000	2	PALMER	AVE	4670	Overhead	Distribution	Luminaire	LUM HPS RWY 50W	Active	50	65485-54003	S-14	CITY OF E PROVIDENCE
0011	000	2	PALMER	AVE	4670	Overhead	Distribution	Luminaire	LUM HPS RWY 50W	Active	50	65485-54003	S-14	CITY OF E PROVIDENCE
0012	000	2	PALMER	AVE	4670	Overhead	Distribution	Luminaire	LUM HPS RWY 50W TT	Temp Turn Off	50	65485-54003	S-14	CITY OF E PROVIDENCE
0013	000	2	PALMER	AVE	4670	Overhead	Distribution	Luminaire	LUM HPS RWY 50W	Active	50	65485-54003	S-14	CITY OF E PROVIDENCE
0001	000	2	PARK	DR	4675	Overhead	Distribution	Luminaire	LUM HPS RWY 50W	Active	50	65485-54003	S-14	CITY OF E PROVIDENCE
0002	000	2	PARK	DR	4675	Overhead	Distribution	Luminaire	LUM HPS RWY 50W TT	Temp Turn Off	50	65485-54003	S-14	CITY OF E PROVIDENCE
0003	000	2	PARK	DR	4675	Overhead	Distribution	Luminaire	LUM HPS RWY 50W	Active	50	65485-54003	S-14	CITY OF E PROVIDENCE
0004	000	2	PARK	DR	4675	Overhead	Distribution	Luminaire	LUM HPS RWY 50W	Active	50	65485-54003	S-14	CITY OF E PROVIDENCE
0005	000	2	PARK	DR	4675	Overhead	Distribution	Luminaire	LUM HPS RWY 50W TT	Temp Turn Off	50	65485-54003	S-14	CITY OF E PROVIDENCE
0006	000	2	PARK	DR	4675	Overhead	Distribution	Luminaire	LUM HPS RWY 50W	Active	50	65485-54003	S-14	CITY OF E PROVIDENCE
0008	000	2	PARK	DR	4675	Overhead	Distribution	Luminaire	LUM HPS RWY 50W	Active	50	65485-54003	S-14	CITY OF E PROVIDENCE
0010	000	2	PARK	DR	4675	Overhead	Distribution	Luminaire	LUM HPS RWY 50W	Active	50	65485-54003	S-14	CITY OF E PROVIDENCE
0013	000	2	PARK	DR	4675	Overhead	Distribution	Luminaire	LUM HPS RWY 50W	Active	50	65485-54003	S-14	CITY OF E PROVIDENCE
0015	000	2	PARK	DR	4675	Overhead	Distribution	Luminaire	LUM HPS RWY 50W	Active	50	65485-54003	S-14	CITY OF E PROVIDENCE
0001	000	2	PARK	RD	4680	Overhead	Distribution	Luminaire	LUM HPS RWY 50W	Active	50	65485-54003	S-14	CITY OF E PROVIDENCE
0003	000	2	PARK	RD	4680	Overhead	Distribution	Luminaire	LUM HPS RWY 50W	Active	50	65485-54003	S-14	CITY OF E PROVIDENCE
0004	000	2	PARK	RD	4680	Overhead	Distribution	Luminaire	LUM HPS RWY 50W	Active	50	65485-54003	S-14	CITY OF E PROVIDENCE
0001	000	2	PARK SQUARE	AVE	4685	Overhead	Distribution	Luminaire	LUM HPS RWY 50W	Active	50	65485-54003	S-14	CITY OF E PROVIDENCE
0003	000	2	PARK SQUARE	AVE	4685	Overhead	Distribution	Luminaire	LUM HPS RWY 50W	Active	50	65485-54003	S-14	CITY OF E PROVIDENCE
0001	000	2	PARKER	AVE	4690	Overhead	Distribution	Luminaire	LUM HPS RWY 50W	Active	50	65485-54003	S-14	CITY OF E PROVIDENCE
0002	000	2	PARKER	AVE	4690	Overhead	Distribution	Luminaire	LUM HPS RWY 50W	Active	50	65485-54003	S-14	CITY OF E PROVIDENCE
0002	000	2	PARSONS	AVE	4695	Overhead	Distribution	Luminaire	LUM HPS RWY 50W	Active	50	65485-54003	S-14	CITY OF E PROVIDENCE
0007	000	1	PARSONS	AVE	4695	Overhead	Distribution	Luminaire	LUM MV RWY 100W	Inactive	100	65485-54003	S-14	CITY OF E PROVIDENCE
0009	000	2	PATTON	RD	4700	Overhead	Distribution	Luminaire	LUM HPS RWY 50W	Active	50	90426-19008	S-14	CITY OF E PROVIDENCE
0012	000	2	PATTON	RD	4700	Overhead	Distribution	Luminaire	LUM HPS RWY 50W	Active	50	65485-54003	S-14	CITY OF E PROVIDENCE

Pole No	Pole Suffix	Light Sequ No	Street Name	Street Suffix	Ngrid Line No	Source Type	Pole Use	Component Type	Bill Print and Tariff Description	Billing Status	Lamp Wattage	Account No	Rate	Customer Name
0014	000	2	PATTON	RD	4700	Overhead	Distribution	Luminaire	LUM HPS RWY 50W	Active	50	65485-54003	S-14	CITY OF E PROVIDENCE
0017	000	2	PATTON	RD	4700	Overhead	Distribution	Luminaire	LUM HPS RWY 50W	Active	50	90426-19008	S-14	CITY OF E PROVIDENCE
0001	000	2	PAVILION	AVE	4705	Overhead	Distribution	Luminaire	LUM HPS RWY 50W	Active	50	65485-54003	S-14	CITY OF E PROVIDENCE
0003	000	2	PAVILION	AVE	4705	Overhead	Distribution	Luminaire	LUM HPS RWY 50W	Active	50	65485-54003	S-14	CITY OF E PROVIDENCE
0005	000	1	PAVILION	AVE	4705	Overhead	Distribution	Luminaire	LUM HPS RWY 50W	Active	50	65485-54003	S-14	CITY OF E PROVIDENCE
0008	000	2	PAVILION	AVE	4705	Overhead	Distribution	Luminaire	LUM HPS RWY 50W	Active	50	65485-54003	S-14	CITY OF E PROVIDENCE
0010	000	2	PAVILION	AVE	4705	Overhead	Distribution	Luminaire	LUM HPS RWY 50W	Active	50	65485-54003	S-14	CITY OF E PROVIDENCE
0014	000	2	PAVILION	AVE	4705	Overhead	Distribution	Luminaire	LUM HPS RWY 50W	Active	50	65485-54003	S-14	CITY OF E PROVIDENCE
0016	000	2	PAVILION	AVE	4705	Overhead	Distribution	Luminaire	LUM HPS RWY 50W TT	Temp Turn Off	50	65485-54003	S-14	CITY OF E PROVIDENCE
0017	000	2	PAVILION	AVE	4705	Overhead	Distribution	Luminaire	LUM HPS RWY 50W	Active	50	65485-54003	S-14	CITY OF E PROVIDENCE
0018	000	2	PAVILION	AVE	4705	Overhead	Distribution	Luminaire	LUM HPS RWY 50W TT	Temp Turn Off	50	65485-54003	S-14	CITY OF E PROVIDENCE
0019	000	2	PAVILION	AVE	4705	Overhead	Distribution	Luminaire	LUM HPS RWY 50W	Active	50	65485-54003	S-14	CITY OF E PROVIDENCE
0020	000	2	PAVILION	AVE	4705	Overhead	Distribution	Luminaire	LUM HPS RWY 50W TT	Temp Turn Off	50	65485-54003	S-14	CITY OF E PROVIDENCE
0022	000	2	PAVILION	AVE	4705	Overhead	Distribution	Luminaire	LUM HPS RWY 50W	Active	50	65485-54003	S-14	CITY OF E PROVIDENCE
0002	000	2	PAWTUCKET	AVE	4710	Overhead	Distribution	Luminaire	LUM HPS RWY 50W	Active	50	65485-54003	S-14	CITY OF E PROVIDENCE
0003	000	1	PAWTUCKET	AVE	4710	Overhead	Distribution	Luminaire	LUM HPS RWY 100W	Active	100	65485-54003	S-14	CITY OF E PROVIDENCE
0004	051	0	PAWTUCKET	AVE	4710	Overhead	Street Lighting	Pole	POLE - WOOD	Inactive	0	65485-54003	S-14	CITY OF E PROVIDENCE
0004	051	2	PAWTUCKET	AVE	4710	Overhead	Street Lighting	Luminaire	LUM HPS RWY 250W	Active	250	65485-54003	S-14	CITY OF E PROVIDENCE
0006	000	2	PAWTUCKET	AVE	4710	Overhead	Distribution	Luminaire	LUM HPS RWY 50W	Active	50	90426-19008	S-14	CITY OF E PROVIDENCE
0008	000	1	PAWTUCKET	AVE	4710	Overhead	Distribution	Luminaire	LUM HPS RWY 100W	Active	100	65485-54003	S-14	CITY OF E PROVIDENCE
0016	000	2	PAWTUCKET	AVE	4710	Overhead	Distribution	Luminaire	LUM HPS RWY 250W	Active	250	65485-54003	S-14	CITY OF E PROVIDENCE
0020	000	1	PAWTUCKET	AVE	4710	Overhead	Distribution	Luminaire	LUM HPS RWY 100W	Active	100	65485-54003	S-14	CITY OF E PROVIDENCE
0022	000	1	PAWTUCKET	AVE	4710	Overhead	Distribution	Luminaire	LUM HPS RWY 100W	Active	100	65485-54003	S-14	CITY OF E PROVIDENCE
0024	000	2	PAWTUCKET	AVE	4710	Overhead	Distribution	Luminaire	LUM HPS RWY 250W TT	Temp Turn Off	250	65485-54003	S-14	CITY OF E PROVIDENCE
0026	000	1	PAWTUCKET	AVE	4710	Overhead	Distribution	Luminaire	LUM HPS RWY 100W	Active	100	65485-54003	S-14	CITY OF E PROVIDENCE
0028	000	1	PAWTUCKET	AVE	4710	Overhead	Distribution	Luminaire	LUM HPS RWY 100W	Active	100	65485-54003	S-14	CITY OF E PROVIDENCE
0029	000	2	PAWTUCKET	AVE	4710	Overhead	Distribution	Luminaire	LUM HPS RWY 250W TT	Temp Turn Off	250	65485-54003	S-14	CITY OF E PROVIDENCE
0030	000	1	PAWTUCKET	AVE	4710	Overhead	Distribution	Luminaire	LUM HPS RWY 100W	Active	100	65485-54003	S-14	CITY OF E PROVIDENCE
0032	000	1	PAWTUCKET	AVE	4710	Overhead	Distribution	Luminaire	LUM HPS RWY 100W	Active	100	65485-54003	S-14	CITY OF E PROVIDENCE
0035	000	1	PAWTUCKET	AVE	4710	Overhead	Distribution	Luminaire	LUM HPS RWY 100W	Active	100	65485-54003	S-14	CITY OF E PROVIDENCE
0038	000	1	PAWTUCKET	AVE	4710	Overhead	Distribution	Luminaire	LUM HPS RWY 100W	Active	100	65485-54003	S-14	CITY OF E PROVIDENCE
0040	000	2	PAWTUCKET	AVE	4710	Overhead	Distribution	Luminaire	LUM HPS RWY 250W	Active	250	65485-54003	S-14	CITY OF E PROVIDENCE
0042	050	2	PAWTUCKET	AVE	4710	Overhead	Distribution	Luminaire	LUM HPS RWY 250W	Active	250	65485-54003	S-14	CITY OF E PROVIDENCE
0043	000	1	PAWTUCKET	AVE	4710	Overhead	Distribution	Luminaire	LUM HPS RWY 100W	Active	100	65485-54003	S-14	CITY OF E PROVIDENCE
0044	000	1	PAWTUCKET	AVE	4710	Overhead	Distribution	Luminaire	LUM HPS RWY 100W	Active	100	65485-54003	S-14	CITY OF E PROVIDENCE
0045	000	2	PAWTUCKET	AVE	4710	Overhead	Distribution	Luminaire	LUM HPS RWY 250W TT	Temp Turn Off	250	65485-54003	S-14	CITY OF E PROVIDENCE
0046	000	2	PAWTUCKET	AVE	4710	Overhead	Distribution	Luminaire	LUM HPS RWY 250W TT	Temp Turn Off	250	65485-54003	S-14	CITY OF E PROVIDENCE
0047	000	1	PAWTUCKET	AVE	4710	Overhead	Distribution	Luminaire	LUM HPS RWY 100W	Active	100	65485-54003	S-14	CITY OF E PROVIDENCE
0051	000	2	PAWTUCKET	AVE	4710	Overhead	Distribution	Luminaire	LUM HPS RWY 50W	Active	50	65485-54003	S-14	CITY OF E PROVIDENCE
0053	000	2	PAWTUCKET	AVE	4710	Overhead	Distribution	Luminaire	LUM HPS RWY 100W	Active	100	65485-54003	S-14	CITY OF E PROVIDENCE
0054	000	2	PAWTUCKET	AVE	4710	Overhead	Distribution	Luminaire	LUM HPS RWY 250W TT	Temp Turn Off	250	90426-19008	S-14	CITY OF E PROVIDENCE
0055	000	2	PAWTUCKET	AVE	4710	Overhead	Distribution	Luminaire	LUM HPS RWY 100W	Active	100	65485-54003	S-14	CITY OF E PROVIDENCE
0057	000	2	PAWTUCKET	AVE	4710	Overhead	Distribution	Luminaire	LUM HPS RWY 100W	Active	100	65485-54003	S-14	CITY OF E PROVIDENCE
0059	000	2	PAWTUCKET	AVE	4710	Overhead	Distribution	Luminaire	LUM HPS RWY 100W	Active	100	65485-54003	S-14	CITY OF E PROVIDENCE
0060	000	2	PAWTUCKET	AVE	4710	Overhead	Distribution	Luminaire	LUM HPS RWY 250W TT	Temp Turn Off	250	65485-54003	S-14	CITY OF E PROVIDENCE
0061	000	2	PAWTUCKET	AVE	4710	Overhead	Distribution	Luminaire	LUM HPS RWY 100W	Active	100	65485-54003	S-14	CITY OF E PROVIDENCE
0063	000	2	PAWTUCKET	AVE	4710	Overhead	Distribution	Luminaire	LUM HPS RWY 100W	Active	100	65485-54003	S-14	CITY OF E PROVIDENCE
0065	000	2	PAWTUCKET	AVE	4710	Overhead	Distribution	Luminaire	LUM HPS RWY 100W	Active	100	65485-54003	S-14	CITY OF E PROVIDENCE
0066	000	2	PAWTUCKET	AVE	4710	Overhead	Distribution	Luminaire	LUM HPS RWY 50W TT	Temp Turn Off	50	65485-54003	S-14	CITY OF E PROVIDENCE
0067	000	2	PAWTUCKET	AVE	4710	Overhead	Distribution	Luminaire	LUM HPS RWY 250W TT	Temp Turn Off	250	65485-54003	S-14	CITY OF E PROVIDENCE
0068	050	1	PAWTUCKET	AVE	4710	Overhead	Distribution	Luminaire	LUM HPS RWY 100W	Active	100	65485-54003	S-14	CITY OF E PROVIDENCE
0069	000	2	PAWTUCKET	AVE	4710	Overhead	Distribution	Luminaire	LUM HPS RWY 100W	Active	100	90426-19008	S-14	CITY OF E PROVIDENCE
0070	000	2	PAWTUCKET	AVE	4710	Overhead	Distribution	Luminaire	LUM HPS RWY 250W TT	Temp Turn Off	250	65485-54003	S-14	CITY OF E PROVIDENCE
0071	000	2	PAWTUCKET	AVE	4710	Overhead	Distribution	Luminaire	LUM HPS RWY 100W	Active	100	65485-54003	S-14	CITY OF E PROVIDENCE
0073	000	2	PAWTUCKET	AVE	4710	Overhead	Distribution	Luminaire	LUM HPS RWY 100W	Active	100	65485-54003	S-14	CITY OF E PROVIDENCE

Pole No	Pole Suffix	Light Sequ No	Street Name	Street Suffix	Ngrid Line No	Source Type	Pole Use	Component Type	Bill Print and Tariff Description	Billing Status	Lamp Wattage	Account No	Rate	Customer Name
0074	000	2	PAWTUCKET	AVE	4710	Overhead	Distribution	Luminaire	LUM HPS RWY 50W TT	Temp Turn Off	50	65485-54003	S-14	CITY OF E PROVIDENCE
0076	000	2	PAWTUCKET	AVE	4710	Overhead	Distribution	Luminaire	LUM HPS RWY 100W	Active	100	65485-54003	S-14	CITY OF E PROVIDENCE
0077	000	2	PAWTUCKET	AVE	4710	Overhead	Distribution	Luminaire	LUM HPS RWY 100W	Active	100	65485-54003	S-14	CITY OF E PROVIDENCE
0079	000	2	PAWTUCKET	AVE	4710	Overhead	Distribution	Luminaire	LUM HPS RWY 100W	Active	100	65485-54003	S-14	CITY OF E PROVIDENCE
0081	000	2	PAWTUCKET	AVE	4710	Overhead	Distribution	Luminaire	LUM HPS RWY 100W	Active	100	65485-54003	S-14	CITY OF E PROVIDENCE
0082	000	2	PAWTUCKET	AVE	4710	Overhead	Distribution	Luminaire	LUM HPS RWY 100W	Active	100	65485-54003	S-14	CITY OF E PROVIDENCE
0084	000	2	PAWTUCKET	AVE	4710	Overhead	Distribution	Luminaire	LUM HPS RWY 100W	Active	100	65485-54003	S-14	CITY OF E PROVIDENCE
0087	000	2	PAWTUCKET	AVE	4710	Overhead	Distribution	Luminaire	LUM HPS RWY 100W	Active	100	65485-54003	S-14	CITY OF E PROVIDENCE
0091	000	2	PAWTUCKET	AVE	4710	Overhead	Distribution	Luminaire	LUM HPS RWY 100W	Active	100	65485-54003	S-14	CITY OF E PROVIDENCE
0092	000	2	PAWTUCKET	AVE	4710	Overhead	Distribution	Luminaire	LUM HPS RWY 250W TT	Temp Turn Off	250	90426-19008	S-14	CITY OF E PROVIDENCE
0092	050	2	PAWTUCKET	AVE	4710	Overhead	Distribution	Luminaire	LUM HPS RWY 100W	Active	100	65485-54003	S-14	CITY OF E PROVIDENCE
0093	000	2	PAWTUCKET	AVE	4710	Overhead	Distribution	Luminaire	LUM HPS RWY 250W	Active	250	65485-54003	S-14	CITY OF E PROVIDENCE
0093	050	2	PAWTUCKET	AVE	4710	Overhead	Distribution	Luminaire	LUM HPS RWY 100W	Active	100	65485-54003	S-14	CITY OF E PROVIDENCE
0094	050	2	PAWTUCKET	AVE	4710	Overhead	Distribution	Luminaire	LUM HPS RWY 100W	Active	100	65485-54003	S-14	CITY OF E PROVIDENCE
0095	000	2	PAWTUCKET	AVE	4710	Overhead	Distribution	Luminaire	LUM HPS RWY 100W	Active	100	65485-54003	S-14	CITY OF E PROVIDENCE
0097	000	1	PAWTUCKET	AVE	4710	Overhead	Distribution	Luminaire	LUM HPS RWY 100W	Active	100	65485-54003	S-14	CITY OF E PROVIDENCE
0097	050	1	PAWTUCKET	AVE	4710	Overhead	Distribution	Luminaire	LUM HPS RWY 100W	Active	100	65485-54003	S-14	CITY OF E PROVIDENCE
0098	000	1	PAWTUCKET	AVE	4710	Overhead	Distribution	Luminaire	LUM HPS RWY 100W	Active	100	65485-54003	S-14	CITY OF E PROVIDENCE
0100	000	1	PAWTUCKET	AVE	4710	Overhead	Distribution	Luminaire	LUM HPS RWY 100W	Active	100	65485-54003	S-14	CITY OF E PROVIDENCE
0103	000	2	PAWTUCKET	AVE	4710	Overhead	Distribution	Luminaire	LUM HPS RWY 250W	Active	250	65485-54003	S-14	CITY OF E PROVIDENCE
0105	000	2	PAWTUCKET	AVE	4710	Overhead	Distribution	Luminaire	LUM HPS RWY 250W TT	Temp Turn Off	250	65485-54003	S-14	CITY OF E PROVIDENCE
0106	000	1	PAWTUCKET	AVE	4710	Overhead	Distribution	Luminaire	LUM HPS RWY 100W	Active	100	65485-54003	S-14	CITY OF E PROVIDENCE
0109	000	1	PAWTUCKET	AVE	4710	Overhead	Distribution	Luminaire	LUM HPS RWY 100W	Active	100	65485-54003	S-14	CITY OF E PROVIDENCE
0111	000	1	PAWTUCKET	AVE	4710	Overhead	Distribution	Luminaire	LUM HPS RWY 250W TT	Temp Turn Off	250	65485-54003	S-14	CITY OF E PROVIDENCE
0113	000	1	PAWTUCKET	AVE	4710	Overhead	Distribution	Luminaire	LUM HPS RWY 100W	Active	100	65485-54003	S-14	CITY OF E PROVIDENCE
0115	000	2	PAWTUCKET	AVE	4710	Overhead	Distribution	Luminaire	LUM HPS RWY 250W	Active	250	65485-54003	S-14	CITY OF E PROVIDENCE
0124	000	1	PAWTUCKET	AVE	4710	Overhead	Distribution	Luminaire	LUM HPS RWY 100W	Active	100	90426-19008	S-14	CITY OF E PROVIDENCE
0127	000	1	PAWTUCKET	AVE	4710	Overhead	Distribution	Luminaire	LUM HPS RWY 100W	Active	100	65485-54003	S-14	CITY OF E PROVIDENCE
0131	000	2	PAWTUCKET	AVE	4710	Overhead	Distribution	Luminaire	LUM HPS RWY 250W TT	Temp Turn Off	250	90426-19008	S-14	CITY OF E PROVIDENCE
0132	000	1	PAWTUCKET	AVE	4710	Overhead	Distribution	Luminaire	LUM HPS RWY 250W TT	Temp Turn Off	250	65485-54003	S-14	CITY OF E PROVIDENCE
0138	000	2	PAWTUCKET	AVE	4710	Overhead	Distribution	Luminaire	LUM HPS RWY 250W TT	Temp Turn Off	250	65485-54003	S-14	CITY OF E PROVIDENCE
0139	000	1	PAWTUCKET	AVE	4710	Overhead	Distribution	Luminaire	LUM HPS RWY 250W TT	Temp Turn Off	250	65485-54003	S-14	CITY OF E PROVIDENCE
0140	000	1	PAWTUCKET	AVE	4710	Overhead	Distribution	Luminaire	LUM HPS RWY 100W	Inactive	100	65485-54003	S-14	CITY OF E PROVIDENCE
0142	050	1	PAWTUCKET	AVE	4710	Overhead	Distribution	Luminaire	LUM HPS RWY 250W	Inactive	250	65485-54003	S-14	CITY OF E PROVIDENCE
0142	052	2	PAWTUCKET	AVE	4710	Overhead	Distribution	Luminaire	LUM HPS RWY 250W	Active	250	90426-19008	S-14	CITY OF E PROVIDENCE
0150	050	2	PAWTUCKET	AVE	4710	Overhead	Distribution	Luminaire	LUM HPS RWY 250W	Active	250	65485-54003	S-14	CITY OF E PROVIDENCE
0151	000	2	PAWTUCKET	AVE	4710	Overhead	Distribution	Luminaire	LUM HPS RWY 250W	Active	250	65485-54003	S-14	CITY OF E PROVIDENCE
0154	000	1	PAWTUCKET	AVE	4710	Overhead	Distribution	Luminaire	LUM HPS RWY 100W	Active	100	65485-54003	S-14	CITY OF E PROVIDENCE
0154	050	2	PAWTUCKET	AVE	4710	Overhead	Distribution	Luminaire	LUM HPS RWY 250W	Active	250	65485-54003	S-14	CITY OF E PROVIDENCE
0156	000	1	PAWTUCKET	AVE	4710	Overhead	Distribution	Luminaire	LUM HPS RWY 100W	Active	100	65485-54003	S-14	CITY OF E PROVIDENCE
0157	000	2	PAWTUCKET	AVE	4710	Overhead	Distribution	Luminaire	LUM HPS RWY 250W TT	Temp Turn Off	250	65485-54003	S-14	CITY OF E PROVIDENCE
0158	000	2	PAWTUCKET	AVE	4710	Overhead	Distribution	Luminaire	LUM HPS RWY 250W TT	Temp Turn Off	250	65485-54003	S-14	CITY OF E PROVIDENCE
0160	000	1	PAWTUCKET	AVE	4710	Overhead	Distribution	Luminaire	LUM HPS RWY 100W	Active	100	65485-54003	S-14	CITY OF E PROVIDENCE
0161	000	1	PAWTUCKET	AVE	4710	Overhead	Distribution	Luminaire	LUM HPS RWY 100W	Active	100	65485-54003	S-14	CITY OF E PROVIDENCE
0163	000	1	PAWTUCKET	AVE	4710	Overhead	Distribution	Luminaire	LUM HPS RWY 100W	Active	100	65485-54003	S-14	CITY OF E PROVIDENCE
0167	000	2	PAWTUCKET	AVE	4710	Overhead	Distribution	Luminaire	LUM HPS RWY 250W	Active	250	65485-54003	S-14	CITY OF E PROVIDENCE
0169	000	1	PAWTUCKET	AVE	4710	Overhead	Distribution	Luminaire	LUM HPS RWY 100W	Active	100	65485-54003	S-14	CITY OF E PROVIDENCE
0173	000	1	PAWTUCKET	AVE	4710	Overhead	Distribution	Luminaire	LUM HPS RWY 100W	Active	100	65485-54003	S-14	CITY OF E PROVIDENCE
0177	000	2	PAWTUCKET	AVE	4710	Overhead	Distribution	Luminaire	LUM HPS RWY 250W	Active	250	65485-54003	S-14	CITY OF E PROVIDENCE
0178	000	1	PAWTUCKET	AVE	4710	Overhead	Distribution	Luminaire	LUM HPS RWY 100W	Active	100	65485-54003	S-14	CITY OF E PROVIDENCE
0184	084	2	PAWTUCKET	AVE	4710	Overhead	Distribution	Luminaire	LUM HPS RWY 250W	Active	250	90426-19008	S-14	CITY OF E PROVIDENCE
0187	000	1	PAWTUCKET	AVE	4710	Overhead	Distribution	Luminaire	LUM HPS RWY 100W	Active	100	65485-54003	S-14	CITY OF E PROVIDENCE
0189	000	2	PAWTUCKET	AVE	4710	Overhead	Distribution	Luminaire	LUM HPS RWY 250W	Active	250	65485-54003	S-14	CITY OF E PROVIDENCE
0191	001	2	PAWTUCKET	AVE	4710	Overhead	Distribution	Luminaire	LUM HPS RWY 250W	Active	250	90426-19008	S-14	CITY OF E PROVIDENCE
0192	000	1	PAWTUCKET	AVE	4710	Overhead	Distribution	Luminaire	LUM HPS RWY 100W	Active	100	65485-54003	S-14	CITY OF E PROVIDENCE

Pole No	Pole Suffix	Light Sequ No	Street Name	Street Suffix	Ngrid Line No	Source Type	Pole Use	Component Type	Bill Print and Tariff Description	Billing Status	Lamp Wattage	Account No	Rate	Customer Name
0193	001	2	PAWTUCKET	AVE	4710	Overhead	Distribution	Luminaire	LUM HPS RWY 250W	Active	250	90426-19008	S-14	CITY OF E PROVIDENCE
0194	000	1	PAWTUCKET	AVE	4710	Overhead	Distribution	Luminaire	LUM HPS RWY 100W	Active	100	65485-54003	S-14	CITY OF E PROVIDENCE
0195	001	2	PAWTUCKET	AVE	4710	Overhead	Distribution	Luminaire	LUM HPS RWY 250W	Active	250	65485-54003	S-14	CITY OF E PROVIDENCE
0196	000	1	PAWTUCKET	AVE	4710	Overhead	Distribution	Luminaire	LUM HPS RWY 100W	Active	100	65485-54003	S-14	CITY OF E PROVIDENCE
0197	001	2	PAWTUCKET	AVE	4710	Overhead	Distribution	Luminaire	LUM HPS RWY 250W	Active	250	65485-54003	S-14	CITY OF E PROVIDENCE
0202	050	2	PAWTUCKET	AVE	4710	Overhead	Distribution	Luminaire	LUM HPS RWY 250W	Active	250	90426-19008	S-14	CITY OF E PROVIDENCE
0203	000	2	PAWTUCKET	AVE	4710	Overhead	Distribution	Luminaire	LUM HPS RWY 100W	Active	100	90426-19008	S-14	CITY OF E PROVIDENCE
0205	050	2	PAWTUCKET	AVE	4710	Overhead	Distribution	Luminaire	LUM HPS RWY 100W	Active	100	65485-54003	S-14	CITY OF E PROVIDENCE
0208	050	2	PAWTUCKET	AVE	4710	Overhead	Distribution	Luminaire	LUM HPS RWY 100W	Active	100	65485-54003	S-14	CITY OF E PROVIDENCE
0210	000	1	PAWTUCKET	AVE	4710	Overhead	Distribution	Luminaire	LUM HPS RWY 100W	Active	100	65485-54003	S-14	CITY OF E PROVIDENCE
0212	050	2	PAWTUCKET	AVE	4710	Overhead	Distribution	Luminaire	LUM HPS RWY 250W TT	Temp Turn Off	250	65485-54003	S-14	CITY OF E PROVIDENCE
0215	050	2	PAWTUCKET	AVE	4710	Overhead	Distribution	Luminaire	LUM HPS RWY 100W	Active	100	90426-19008	S-14	CITY OF E PROVIDENCE
0217	050	2	PAWTUCKET	AVE	4710	Overhead	Distribution	Luminaire	LUM HPS RWY 100W	Active	100	65485-54003	S-14	CITY OF E PROVIDENCE
0220	000	1	PAWTUCKET	AVE	4710	Overhead	Distribution	Luminaire	LUM HPS RWY 100W	Active	100	90426-19008	S-14	CITY OF E PROVIDENCE
0220	050	1	PAWTUCKET	AVE	4710	Overhead	Distribution	Luminaire	LUM HPS RWY 100W	Active	100	65485-54003	S-14	CITY OF E PROVIDENCE
0222	000	2	PAWTUCKET	AVE	4710	Overhead	Distribution	Luminaire	LUM HPS RWY 100W	Active	100	90426-19008	S-14	CITY OF E PROVIDENCE
0222	050	2	PAWTUCKET	AVE	4710	Overhead	Distribution	Luminaire	LUM HPS RWY 100W	Active	100	65485-54003	S-14	CITY OF E PROVIDENCE
0223	050	2	PAWTUCKET	AVE	4710	Overhead	Distribution	Luminaire	LUM HPS RWY 100W	Active	100	90426-19008	S-14	CITY OF E PROVIDENCE
0227	000	2	PAWTUCKET	AVE	4710	Overhead	Distribution	Luminaire	LUM HPS RWY 250W TT	Temp Turn Off	250	90426-19008	S-14	CITY OF E PROVIDENCE
0231	050	2	PAWTUCKET	AVE	4710	Overhead	Distribution	Luminaire	LUM HPS RWY 100W	Active	100	65485-54003	S-14	CITY OF E PROVIDENCE
0233	050	2	PAWTUCKET	AVE	4710	Overhead	Distribution	Luminaire	LUM HPS RWY 250W	Active	250	65485-54003	S-14	CITY OF E PROVIDENCE
0237	050	2	PAWTUCKET	AVE	4710	Overhead	Distribution	Luminaire	LUM HPS RWY 100W	Active	100	65485-54003	S-14	CITY OF E PROVIDENCE
0240	050	2	PAWTUCKET	AVE	4710	Overhead	Distribution	Luminaire	LUM HPS RWY 250W	Active	250	65485-54003	S-14	CITY OF E PROVIDENCE
0247	051	2	PAWTUCKET	AVE	4710	Overhead	Distribution	Luminaire	LUM HPS RWY 250W	Active	250	65485-54003	S-14	CITY OF E PROVIDENCE
0254	000	2	PAWTUCKET	AVE	4710	Overhead	Distribution	Luminaire	LUM HPS RWY 100W	Active	100	65485-54003	S-14	CITY OF E PROVIDENCE
0256	050	1	PAWTUCKET	AVE	4710	Overhead	Distribution	Luminaire	LUM HPS RWY 100W	Active	100	65485-54003	S-14	CITY OF E PROVIDENCE
0257	000	1	PAWTUCKET	AVE	4710	Overhead	Distribution	Luminaire	LUM HPS RWY 100W	Active	100	65485-54003	S-14	CITY OF E PROVIDENCE
0258	000	2	PAWTUCKET	AVE	4710	Overhead	Distribution	Luminaire	LUM HPS RWY 250W TT	Temp Turn Off	250	65485-54003	S-14	CITY OF E PROVIDENCE
0260	000	2	PAWTUCKET	AVE	4710	Overhead	Distribution	Luminaire	LUM HPS RWY 250W TT	Temp Turn Off	250	65485-54003	S-14	CITY OF E PROVIDENCE
0263	000	1	PAWTUCKET	AVE	4710	Overhead	Distribution	Luminaire	LUM HPS RWY 100W	Active	100	65485-54003	S-14	CITY OF E PROVIDENCE
0264	050	2	PAWTUCKET	AVE	4710	Overhead	Distribution	Luminaire	LUM HPS RWY 50W	Active	50	65485-54003	S-14	CITY OF E PROVIDENCE
0265	000	2	PAWTUCKET	AVE	4710	Overhead	Distribution	Luminaire	LUM HPS RWY 250W TT	Temp Turn Off	250	65485-54003	S-14	CITY OF E PROVIDENCE
0285	000	1	PAWTUCKET	AVE	4710	Overhead	Distribution	Luminaire	LUM HPS RWY 100W	Active	100	65485-54003	S-14	CITY OF E PROVIDENCE
0301	001	3	PAWTUCKET	AVE	4710	Overhead	Distribution	Luminaire	LUM MV RWY 400W	Red Cap Perm	400	0-	S-10	Inactive
0302	000	1	PAWTUCKET	AVE	4710	Overhead	Distribution	Luminaire	LUM HPS RWY 100W	Active	100	65485-54003	S-14	CITY OF E PROVIDENCE
0308	000	1	PAWTUCKET	AVE	4710	Overhead	Distribution	Luminaire	LUM HPS RWY 100W	Active	100	65485-54003	S-14	CITY OF E PROVIDENCE
9009	000	2	PAWTUCKET	AVE	4710	Overhead	Distribution	Luminaire	LUM HPS RWY 250W TT	Temp Turn Off	250	65485-54003	S-14	CITY OF E PROVIDENCE
9012	000	1	PAWTUCKET	AVE	4710	Overhead	Distribution	Luminaire	LUM HPS RWY 100W	Active	100	65485-54003	S-14	CITY OF E PROVIDENCE
9016	000	2	PAWTUCKET	AVE	4710	Overhead	Distribution	Luminaire	LUM HPS RWY 250W	Active	250	65485-54003	S-14	CITY OF E PROVIDENCE
9017	000	2	PAWTUCKET	AVE	4710	Overhead	Distribution	Luminaire	LUM HPS RWY 250W	Active	250	90426-19008	S-14	CITY OF E PROVIDENCE
9035	000	1	PAWTUCKET	AVE	4710	Overhead	Distribution	Luminaire	LUM HPS RWY 100W	Active	100	65485-54003	S-14	CITY OF E PROVIDENCE
9036	050	0	PAWTUCKET	AVE	4710	Overhead	Street Lighting	Pole	POLE - WOOD	Inactive	0	65485-54003	S-14	CITY OF E PROVIDENCE
9036	050	1	PAWTUCKET	AVE	4710	Overhead	Street Lighting	Luminaire	LUM HPS RWY 100W	Active	100	65485-54003	S-14	CITY OF E PROVIDENCE
9037	000	1	PAWTUCKET	AVE	4710	Overhead	Distribution	Luminaire	LUM HPS RWY 100W	Active	100	65485-54003	S-14	CITY OF E PROVIDENCE
9038	050	0	PAWTUCKET	AVE	4710	Overhead	Street Lighting	Pole	POLE - WOOD	Inactive	0	65485-54003	S-14	CITY OF E PROVIDENCE
9038	050	1	PAWTUCKET	AVE	4710	Overhead	Street Lighting	Luminaire	LUM HPS RWY 100W	Active	100	65485-54003	S-14	CITY OF E PROVIDENCE
9039	000	1	PAWTUCKET	AVE	4710	Overhead	Distribution	Luminaire	LUM HPS RWY 100W	Active	100	65485-54003	S-14	CITY OF E PROVIDENCE
9041	000	2	PAWTUCKET	AVE	4710	Overhead	Distribution	Luminaire	LUM HPS RWY 250W	Active	250	90426-19008	S-14	CITY OF E PROVIDENCE
9042	000	2	PAWTUCKET	AVE	4710	Overhead	Distribution	Luminaire	LUM HPS RWY 250W TT	Temp Turn Off	250	65485-54003	S-14	CITY OF E PROVIDENCE
9089	000	2	PAWTUCKET	AVE	4710	Overhead	Distribution	Luminaire	LUM HPS RWY 100W	Active	100	65485-54003	S-14	CITY OF E PROVIDENCE
9119	000	1	PAWTUCKET	AVE	4710	Overhead	Distribution	Luminaire	LUM HPS RWY 100W	Active	100	65485-54003	S-14	CITY OF E PROVIDENCE
9121	000	1	PAWTUCKET	AVE	4710	Overhead	Distribution	Luminaire	LUM HPS RWY 100W	Active	100	65485-54003	S-14	CITY OF E PROVIDENCE
9133	000	1	PAWTUCKET	AVE	4710	Overhead	Distribution	Luminaire	LUM HPS RWY 250W	Active	250	65485-54003	S-14	CITY OF E PROVIDENCE
9133	001	1	PAWTUCKET	AVE	4710	Overhead	Distribution	Luminaire	LUM HPS RWY 250W	Active	250	65485-54003	S-14	CITY OF E PROVIDENCE
9133	002	2	PAWTUCKET	AVE	4710	Overhead	Distribution	Luminaire	LUM HPS RWY 250W	Active	250	65485-54003	S-14	CITY OF E PROVIDENCE

Pole No	Pole Suffix	Light Sequ No	Street Name	Street Suffix	Ngrid Line No	Source Type	Pole Use	Component Type	Bill Print and Tariff Description	Billing Status	Lamp Wattage	Account No	Rate	Customer Name
9137	000	1	PAWTUCKET	AVE	4710	Overhead	Distribution	Luminaire	LUM HPS RWY 100W	Active	100	65485-54003	S-14	CITY OF E PROVIDENCE
9179	000	1	PAWTUCKET	AVE	4710	Overhead	Distribution	Luminaire	LUM HPS RWY 100W	Active	100	65485-54003	S-14	CITY OF E PROVIDENCE
9182	000	2	PAWTUCKET	AVE	4710	Overhead	Distribution	Luminaire	LUM HPS RWY 250W TT	Temp Turn Off	250	65485-54003	S-14	CITY OF E PROVIDENCE
9183	000	2	PAWTUCKET	AVE	4710	Overhead	Distribution	Luminaire	LUM HPS RWY 250W TT	Temp Turn Off	250	65485-54003	S-14	CITY OF E PROVIDENCE
9198	000	1	PAWTUCKET	AVE	4710	Overhead	Distribution	Luminaire	LUM HPS RWY 100W	Active	100	65485-54003	S-14	CITY OF E PROVIDENCE
9200	000	1	PAWTUCKET	AVE	4710	Overhead	Distribution	Luminaire	LUM HPS RWY 100W	Active	100	65485-54003	S-14	CITY OF E PROVIDENCE
9201	000	2	PAWTUCKET	AVE	4710	Overhead	Distribution	Luminaire	LUM HPS RWY 250W	Active	250	65485-54003	S-14	CITY OF E PROVIDENCE
9202	000	2	PAWTUCKET	AVE	4710	Overhead	Distribution	Luminaire	LUM HPS RWY 250W	Active	250	65485-54003	S-14	CITY OF E PROVIDENCE
9204	000	2	PAWTUCKET	AVE	4710	Overhead	Distribution	Luminaire	LUM HPS RWY 100W	Active	100	65485-54003	S-14	CITY OF E PROVIDENCE
9206	000	1	PAWTUCKET	AVE	4710	Overhead	Distribution	Luminaire	LUM HPS RWY 100W	Active	100	65485-54003	S-14	CITY OF E PROVIDENCE
9208	000	2	PAWTUCKET	AVE	4710	Overhead	Distribution	Luminaire	LUM HPS RWY 250W	Active	250	65485-54003	S-14	CITY OF E PROVIDENCE
9211	000	2	PAWTUCKET	AVE	4710	Overhead	Distribution	Luminaire	LUM HPS RWY 250W	Active	250	65485-54003	S-14	CITY OF E PROVIDENCE
9212	000	1	PAWTUCKET	AVE	4710	Overhead	Distribution	Luminaire	LUM HPS RWY 100W	Active	100	65485-54003	S-14	CITY OF E PROVIDENCE
9214	000	2	PAWTUCKET	AVE	4710	Overhead	Distribution	Luminaire	LUM HPS RWY 250W	Active	250	65485-54003	S-14	CITY OF E PROVIDENCE
9215	000	2	PAWTUCKET	AVE	4710	Overhead	Distribution	Luminaire	LUM HPS RWY 250W	Active	250	65485-54003	S-14	CITY OF E PROVIDENCE
9216	000	1	PAWTUCKET	AVE	4710	Overhead	Distribution	Luminaire	LUM HPS RWY 50W	Active	50	90426-19008	S-14	CITY OF E PROVIDENCE
9218	000	2	PAWTUCKET	AVE	4710	Overhead	Distribution	Luminaire	LUM HPS RWY 250W TT	Temp Turn Off	250	65485-54003	S-14	CITY OF E PROVIDENCE
9223	000	2	PAWTUCKET	AVE	4710	Overhead	Distribution	Luminaire	LUM HPS RWY 100W	Active	100	65485-54003	S-14	CITY OF E PROVIDENCE
9224	000	2	PAWTUCKET	AVE	4710	Overhead	Distribution	Luminaire	LUM HPS RWY 100W	Active	100	65485-54003	S-14	CITY OF E PROVIDENCE
9226	000	2	PAWTUCKET	AVE	4710	Overhead	Distribution	Luminaire	LUM HPS RWY 250W	Active	250	65485-54003	S-14	CITY OF E PROVIDENCE
9228	000	2	PAWTUCKET	AVE	4710	Overhead	Distribution	Luminaire	LUM HPS RWY 250W	Active	250	65485-54003	S-14	CITY OF E PROVIDENCE
9229	000	1	PAWTUCKET	AVE	4710	Overhead	Distribution	Luminaire	LUM HPS RWY 100W	Active	100	90426-19008	S-14	CITY OF E PROVIDENCE
9230	000	1	PAWTUCKET	AVE	4710	Overhead	Distribution	Luminaire	LUM HPS RWY 100W	Active	100	65485-54003	S-14	CITY OF E PROVIDENCE
9232	050	2	PAWTUCKET	AVE	4710	Overhead	Distribution	Luminaire	LUM HPS RWY 100W	Active	100	65485-54003	S-14	CITY OF E PROVIDENCE
9234	000	1	PAWTUCKET	AVE	4710	Overhead	Distribution	Luminaire	LUM HPS RWY 100W	Active	100	65485-54003	S-14	CITY OF E PROVIDENCE
9235	000	2	PAWTUCKET	AVE	4710	Overhead	Distribution	Luminaire	LUM HPS RWY 50W TT	Temp Turn Off	50	90426-19008	S-14	CITY OF E PROVIDENCE
9238	000	2	PAWTUCKET	AVE	4710	Overhead	Distribution	Luminaire	LUM HPS RWY 100W	Active	100	65485-54003	S-14	CITY OF E PROVIDENCE
9241	000	1	PAWTUCKET	AVE	4710	Overhead	Distribution	Luminaire	LUM HPS RWY 100W	Active	100	65485-54003	S-14	CITY OF E PROVIDENCE
9243	000	2	PAWTUCKET	AVE	4710	Overhead	Distribution	Luminaire	LUM HPS RWY 250W	Active	250	65485-54003	S-14	CITY OF E PROVIDENCE
9244	000	2	PAWTUCKET	AVE	4710	Overhead	Distribution	Luminaire	LUM HPS RWY 250W TT	Temp Turn Off	250	65485-54003	S-14	CITY OF E PROVIDENCE
9245	000	1	PAWTUCKET	AVE	4710	Overhead	Distribution	Luminaire	LUM HPS RWY 100W	Active	100	65485-54003	S-14	CITY OF E PROVIDENCE
9247	000	1	PAWTUCKET	AVE	4710	Overhead	Distribution	Luminaire	LUM HPS RWY 100W	Active	100	65485-54003	S-14	CITY OF E PROVIDENCE
9248	000	1	PAWTUCKET	AVE	4710	Overhead	Distribution	Luminaire	LUM HPS RWY 100W	Active	100	65485-54003	S-14	CITY OF E PROVIDENCE
9249	050	1	PAWTUCKET	AVE	4710	Overhead	Distribution	Luminaire	LUM HPS RWY 100W	Active	100	65485-54003	S-14	CITY OF E PROVIDENCE
9251	000	1	PAWTUCKET	AVE	4710	Overhead	Distribution	Luminaire	LUM HPS RWY 100W	Active	100	65485-54003	S-14	CITY OF E PROVIDENCE
9253	000	2	PAWTUCKET	AVE	4710	Overhead	Distribution	Luminaire	LUM HPS RWY 250W TT	Temp Turn Off	250	65485-54003	S-14	CITY OF E PROVIDENCE
9255	000	2	PAWTUCKET	AVE	4710	Overhead	Distribution	Luminaire	LUM HPS RWY 250W TT	Temp Turn Off	250	65485-54003	S-14	CITY OF E PROVIDENCE
9261	000	1	PAWTUCKET	AVE	4710	Overhead	Distribution	Luminaire	LUM HPS RWY 100W	Active	100	65485-54003	S-14	CITY OF E PROVIDENCE
9267	000	1	PAWTUCKET	AVE	4710	Overhead	Distribution	Luminaire	LUM HPS RWY 100W	Active	100	65485-54003	S-14	CITY OF E PROVIDENCE
9270	000	1	PAWTUCKET	AVE	4710	Overhead	Distribution	Luminaire	LUM HPS RWY 100W	Active	100	65485-54003	S-14	CITY OF E PROVIDENCE
9273	000	1	PAWTUCKET	AVE	4710	Overhead	Distribution	Luminaire	LUM HPS RWY 100W	Active	100	65485-54003	S-14	CITY OF E PROVIDENCE
9275	000	1	PAWTUCKET	AVE	4710	Overhead	Distribution	Luminaire	LUM HPS RWY 100W	Active	100	65485-54003	S-14	CITY OF E PROVIDENCE
9277	000	2	PAWTUCKET	AVE	4710	Overhead	Distribution	Luminaire	LUM HPS RWY 250W TT	Temp Turn Off	250	65485-54003	S-14	CITY OF E PROVIDENCE
9279	000	1	PAWTUCKET	AVE	4710	Overhead	Distribution	Luminaire	LUM HPS RWY 100W	Active	100	65485-54003	S-14	CITY OF E PROVIDENCE
9281	000	2	PAWTUCKET	AVE	4710	Overhead	Distribution	Luminaire	LUM HPS RWY 250W TT	Temp Turn Off	250	65485-54003	S-14	CITY OF E PROVIDENCE
9282	000	2	PAWTUCKET	AVE	4710	Overhead	Distribution	Luminaire	LUM HPS RWY 250W	Active	250	65485-54003	S-14	CITY OF E PROVIDENCE
9287	000	1	PAWTUCKET	AVE	4710	Overhead	Distribution	Luminaire	LUM HPS RWY 100W	Active	100	65485-54003	S-14	CITY OF E PROVIDENCE
9289	000	1	PAWTUCKET	AVE	4710	Overhead	Distribution	Luminaire	LUM HPS RWY 100W	Active	100	65485-54003	S-14	CITY OF E PROVIDENCE
9291	000	2	PAWTUCKET	AVE	4710	Overhead	Distribution	Luminaire	LUM HPS RWY 250W TT	Temp Turn Off	250	65485-54003	S-14	CITY OF E PROVIDENCE
9293	000	1	PAWTUCKET	AVE	4710	Overhead	Distribution	Luminaire	LUM HPS RWY 100W	Active	100	65485-54003	S-14	CITY OF E PROVIDENCE
9294	000	1	PAWTUCKET	AVE	4710	Overhead	Distribution	Luminaire	LUM HPS RWY 100W	Active	100	65485-54003	S-14	CITY OF E PROVIDENCE
9297	000	2	PAWTUCKET	AVE	4710	Overhead	Distribution	Luminaire	LUM HPS RWY 250W	Active	250	65485-54003	S-14	CITY OF E PROVIDENCE
9299	000	2	PAWTUCKET	AVE	4710	Overhead	Distribution	Luminaire	LUM HPS RWY 250W	Active	250	65485-54003	S-14	CITY OF E PROVIDENCE
9300	000	2	PAWTUCKET	AVE	4710	Overhead	Distribution	Luminaire	LUM HPS RWY 250W	Active	250	65485-54003	S-14	CITY OF E PROVIDENCE
9301	000	2	PAWTUCKET	AVE	4710	Overhead	Distribution	Luminaire	LUM HPS RWY 250W TT	Temp Turn Off	250	65485-54003	S-14	CITY OF E PROVIDENCE

Pole No	Pole Suffix	Light Sequ No	Street Name	Street Suffix	Ngrid Line No	Source Type	Pole Use	Component Type	Bill Print and Tariff Description	Billing Status	Lamp Wattage	Account No	Rate	Customer Name
9304	000	2	PAWTUCKET	AVE	4710	Overhead	Distribution	Luminaire	LUM HPS RWY 100W	Active	100	65485-54003	S-14	CITY OF E PROVIDENCE
9305	000	2	PAWTUCKET	AVE	4710	Overhead	Distribution	Luminaire	LUM HPS RWY 100W	Active	100	65485-54003	S-14	CITY OF E PROVIDENCE
9307	000	2	PAWTUCKET	AVE	4710	Overhead	Distribution	Luminaire	LUM HPS RWY 100W	Active	100	65485-54003	S-14	CITY OF E PROVIDENCE
9309	000	1	PAWTUCKET	AVE	4710	Overhead	Distribution	Luminaire	LUM HPS RWY 100W	Active	100	65485-54003	S-14	CITY OF E PROVIDENCE
9310	000	1	PAWTUCKET	AVE	4710	Overhead	Distribution	Luminaire	LUM HPS RWY 100W	Active	100	65485-54003	S-14	CITY OF E PROVIDENCE
9312	000	2	PAWTUCKET	AVE	4710	Overhead	Distribution	Luminaire	LUM HPS RWY 100W	Active	100	65485-54003	S-14	CITY OF E PROVIDENCE
9313	000	2	PAWTUCKET	AVE	4710	Overhead	Distribution	Luminaire	LUM HPS RWY 100W	Active	100	65485-54003	S-14	CITY OF E PROVIDENCE
9314	000	2	PAWTUCKET	AVE	4710	Overhead	Distribution	Luminaire	LUM HPS RWY 100W	Active	100	65485-54003	S-14	CITY OF E PROVIDENCE
9315	000	2	PAWTUCKET	AVE	4710	Overhead	Distribution	Luminaire	LUM HPS RWY 100W	Active	100	65485-54003	S-14	CITY OF E PROVIDENCE
9316	000	2	PAWTUCKET	AVE	4710	Overhead	Distribution	Luminaire	LUM HPS RWY 100W	Active	100	65485-54003	S-14	CITY OF E PROVIDENCE
9318	000	2	PAWTUCKET	AVE	4710	Overhead	Distribution	Luminaire	LUM HPS RWY 100W	Active	100	65485-54003	S-14	CITY OF E PROVIDENCE
9319	000	2	PAWTUCKET	AVE	4710	Overhead	Distribution	Luminaire	LUM HPS RWY 100W TT	Temp Turn Off	100	65485-54003	S-14	CITY OF E PROVIDENCE
9320	000	1	PAWTUCKET	AVE	4710	Overhead	Distribution	Luminaire	LUM HPS RWY 100W	Active	100	65485-54003	S-14	CITY OF E PROVIDENCE
9321	000	1	PAWTUCKET	AVE	4710	Overhead	Distribution	Luminaire	LUM HPS RWY 100W	Active	100	65485-54003	S-14	CITY OF E PROVIDENCE
9323	000	1	PAWTUCKET	AVE	4710	Overhead	Distribution	Luminaire	LUM HPS RWY 100W	Active	100	65485-54003	S-14	CITY OF E PROVIDENCE
9026	000	2	PAYETTE	ST	4715	Overhead	Distribution	Luminaire	LUM HPS RWY 50W	Active	50	65485-54003	S-14	CITY OF E PROVIDENCE
9028	000	2	PAYETTE	ST	4715	Overhead	Distribution	Luminaire	LUM HPS RWY 50W	Active	50	65485-54003	S-14	CITY OF E PROVIDENCE
9030	000	2	PAYETTE	ST	4715	Overhead	Distribution	Luminaire	LUM HPS RWY 50W	Active	50	65485-54003	S-14	CITY OF E PROVIDENCE
9032	000	2	PAYETTE	ST	4715	Overhead	Distribution	Luminaire	LUM HPS RWY 50W	Active	50	65485-54003	S-14	CITY OF E PROVIDENCE
9034	000	2	PAYETTE	ST	4715	Overhead	Distribution	Luminaire	LUM HPS RWY 50W	Active	50	65485-54003	S-14	CITY OF E PROVIDENCE
0002	000	2	PEACH ORCHARD	DR	4720	Overhead	Distribution	Luminaire	LUM HPS RWY 50W	Active	50	65485-54003	S-14	CITY OF E PROVIDENCE
0004	000	2	PEACH ORCHARD	DR	4720	Overhead	Distribution	Luminaire	LUM HPS RWY 50W	Active	50	65485-54003	S-14	CITY OF E PROVIDENCE
0006	000	2	PEACH ORCHARD	DR	4720	Overhead	Distribution	Luminaire	LUM HPS RWY 50W	Active	50	65485-54003	S-14	CITY OF E PROVIDENCE
0007	000	2	PEACH ORCHARD	DR	4720	Overhead	Distribution	Luminaire	LUM HPS RWY 50W	Active	50	65485-54003	S-14	CITY OF E PROVIDENCE
0009	000	2	PEACH ORCHARD	DR	4720	Overhead	Distribution	Luminaire	LUM HPS RWY 50W	Active	50	65485-54003	S-14	CITY OF E PROVIDENCE
0010	000	2	PEACH ORCHARD	DR	4720	Overhead	Distribution	Luminaire	LUM HPS RWY 50W	Active	50	65485-54003	S-14	CITY OF E PROVIDENCE
0012	000	2	PEACH ORCHARD	DR	4720	Overhead	Distribution	Luminaire	LUM HPS RWY 50W	Active	50	65485-54003	S-14	CITY OF E PROVIDENCE
0003	000	2	PEARCE	AVE	4725	Overhead	Distribution	Luminaire	LUM HPS RWY 50W	Active	50	65485-54003	S-14	CITY OF E PROVIDENCE
0002	000	2	PEARL	AVE	4730	Overhead	Distribution	Luminaire	LUM HPS RWY 50W	Active	50	65485-54003	S-14	CITY OF E PROVIDENCE
0004	000	2	PEARL	AVE	4730	Overhead	Distribution	Luminaire	LUM HPS RWY 50W	Active	50	65485-54003	S-14	CITY OF E PROVIDENCE
0006	000	2	PEARL	AVE	4730	Overhead	Distribution	Luminaire	LUM HPS RWY 50W	Active	50	65485-54003	S-14	CITY OF E PROVIDENCE
0008	000	2	PEARL	AVE	4730	Overhead	Distribution	Luminaire	LUM HPS RWY 50W	Active	50	65485-54003	S-14	CITY OF E PROVIDENCE
0002	000	2	PECK	AVE	4740	Overhead	Distribution	Luminaire	LUM HPS RWY 50W	Active	50	65485-54003	S-14	CITY OF E PROVIDENCE
0004	000	2	PECK	AVE	4740	Overhead	Distribution	Luminaire	LUM HPS RWY 50W	Active	50	65485-54003	S-14	CITY OF E PROVIDENCE
0006	000	2	PECK	AVE	4740	Overhead	Distribution	Luminaire	LUM HPS RWY 50W	Active	50	65485-54003	S-14	CITY OF E PROVIDENCE
0001	000	2	PENROD	AVE	4745	Overhead	Distribution	Luminaire	LUM HPS RWY 50W TT	Temp Turn Off	50	90426-19008	S-14	CITY OF E PROVIDENCE
0002	000	2	PENROD	AVE	4745	Overhead	Distribution	Luminaire	LUM HPS RWY 50W	Active	50	65485-54003	S-14	CITY OF E PROVIDENCE
0003	000	2	PERSHING	ST	4750	Overhead	Distribution	Luminaire	LUM HPS RWY 50W	Active	50	65485-54003	S-14	CITY OF E PROVIDENCE
0005	000	2	PERSHING	ST	4750	Overhead	Distribution	Luminaire	LUM HPS RWY 50W	Active	50	65485-54003	S-14	CITY OF E PROVIDENCE
0006	000	2	PERSHING	ST	4750	Overhead	Distribution	Luminaire	LUM HPS RWY 50W	Active	50	65485-54003	S-14	CITY OF E PROVIDENCE
0007	000	2	PERSHING	ST	4750	Overhead	Distribution	Luminaire	LUM HPS RWY 50W TT	Temp Turn Off	50	65485-54003	S-14	CITY OF E PROVIDENCE
0008	000	2	PERSHING	ST	4750	Overhead	Distribution	Luminaire	LUM HPS RWY 50W	Active	50	65485-54003	S-14	CITY OF E PROVIDENCE
0009	000	2	PERSHING	ST	4750	Overhead	Distribution	Luminaire	LUM HPS RWY 50W	Active	50	65485-54003	S-14	CITY OF E PROVIDENCE
0010	000	2	PERSHING	ST	4750	Overhead	Distribution	Luminaire	LUM HPS RWY 50W TT	Temp Turn Off	50	65485-54003	S-14	CITY OF E PROVIDENCE
0011	000	2	PERSHING	ST	4750	Overhead	Distribution	Luminaire	LUM HPS RWY 50W	Active	50	65485-54003	S-14	CITY OF E PROVIDENCE
0001	000	2	PETER POND	CT	4752	Overhead	Distribution	Luminaire	LUM HPS RWY 50W	Active	50	65485-54003	S-14	CITY OF E PROVIDENCE
0001	000	2	PICKETT	RD	4765	Overhead	Distribution	Luminaire	LUM HPS RWY 50W	Active	50	65485-54003	S-14	CITY OF E PROVIDENCE
0002	000	2	PICKETT	RD	4765	Overhead	Distribution	Luminaire	LUM HPS RWY 50W	Active	50	65485-54003	S-14	CITY OF E PROVIDENCE
0001	000	2	PIER	RD	4770	Overhead	Distribution	Luminaire	LUM HPS RWY 50W TT	Temp Turn Off	50	65485-54003	S-14	CITY OF E PROVIDENCE
0002	000	2	PIER	RD	4770	Overhead	Distribution	Luminaire	LUM HPS RWY 50W	Active	50	65485-54003	S-14	CITY OF E PROVIDENCE
0003	000	2	PIER	RD	4770	Overhead	Distribution	Luminaire	LUM HPS RWY 50W	Active	50	65485-54003	S-14	CITY OF E PROVIDENCE
0001	000	2	PILGRIM	AVE	4775	Overhead	Distribution	Luminaire	LUM HPS RWY 50W	Active	50	65485-54003	S-14	CITY OF E PROVIDENCE
0003	000	2	PILGRIM	AVE	4775	Overhead	Distribution	Luminaire	LUM HPS RWY 50W	Active	50	65485-54003	S-14	CITY OF E PROVIDENCE
0005	000	2	PILGRIM	AVE	4775	Overhead	Distribution	Luminaire	LUM HPS RWY 50W	Active	50	65485-54003	S-14	CITY OF E PROVIDENCE
0001	000	2	PINE	ST	4780	Overhead	Distribution	Luminaire	LUM HPS RWY 50W	Active	50	65485-54003	S-14	CITY OF E PROVIDENCE

Pole No	Pole Suffix	Light Sequ No	Street Name	Street Suffix	Ngrid Line No	Source Type	Pole Use	Component Type	Bill Print and Tariff Description	Billing Status	Lamp Wattage	Account No	Rate	Customer Name
0002	000	2	PINE	ST	4780	Overhead	Distribution	Luminaire	LUM HPS RWY 50W TT	Temp Turn Off	50	65485-54003	S-14	CITY OF E PROVIDENCE
0001	000	2	PINE CREST	DR	4785	Overhead	Distribution	Luminaire	LUM HPS RWY 50W	Active	50	65485-54003	S-14	CITY OF E PROVIDENCE
0003	000	2	PINE CREST	DR	4785	Overhead	Distribution	Luminaire	LUM HPS RWY 50W	Active	50	65485-54003	S-14	CITY OF E PROVIDENCE
0005	000	2	PINE CREST	DR	4785	Overhead	Distribution	Luminaire	LUM HPS RWY 50W	Active	50	65485-54003	S-14	CITY OF E PROVIDENCE
0007	000	2	PINE CREST	DR	4785	Overhead	Distribution	Luminaire	LUM HPS RWY 50W	Active	50	65485-54003	S-14	CITY OF E PROVIDENCE
0009	000	2	PINE CREST	DR	4785	Overhead	Distribution	Luminaire	LUM HPS RWY 50W	Active	50	65485-54003	S-14	CITY OF E PROVIDENCE
0011	000	2	PINE CREST	DR	4785	Overhead	Distribution	Luminaire	LUM HPS RWY 50W	Active	50	65485-54003	S-14	CITY OF E PROVIDENCE
0013	000	2	PINE CREST	DR	4785	Overhead	Distribution	Luminaire	LUM HPS RWY 50W	Active	50	65485-54003	S-14	CITY OF E PROVIDENCE
0015	000	2	PINE CREST	DR	4785	Overhead	Distribution	Luminaire	LUM HPS RWY 50W	Active	50	65485-54003	S-14	CITY OF E PROVIDENCE
0001	000	2	PINEGROVE	ST	4790	Overhead	Distribution	Luminaire	LUM HPS RWY 50W TT	Temp Turn Off	50	65485-54003	S-14	CITY OF E PROVIDENCE
0002	000	2	PINEGROVE	ST	4790	Overhead	Distribution	Luminaire	LUM HPS RWY 50W	Active	50	90426-19008	S-14	CITY OF E PROVIDENCE
0003	000	2	PINEGROVE	ST	4790	Overhead	Distribution	Luminaire	LUM HPS RWY 50W TT	Temp Turn Off	50	65485-54003	S-14	CITY OF E PROVIDENCE
0004	000	2	PINEGROVE	ST	4790	Overhead	Distribution	Luminaire	LUM HPS RWY 50W	Active	50	65485-54003	S-14	CITY OF E PROVIDENCE
0001	000	2	PINEHURST	RD	4795	Overhead	Distribution	Luminaire	LUM HPS RWY 50W	Active	50	65485-54003	S-14	CITY OF E PROVIDENCE
0003	000	2	PINEHURST	RD	4795	Overhead	Distribution	Luminaire	LUM HPS RWY 100W	Active	100	65485-54003	S-14	CITY OF E PROVIDENCE
0005	000	2	PINEHURST	RD	4795	Overhead	Distribution	Luminaire	LUM HPS RWY 50W TT	Temp Turn Off	50	65485-54003	S-14	CITY OF E PROVIDENCE
0002	000	2	PIONEER	AVE	4800	Overhead	Distribution	Luminaire	LUM HPS RWY 50W	Active	50	65485-54003	S-14	CITY OF E PROVIDENCE
0003	000	2	PIONEER	AVE	4800	Overhead	Distribution	Luminaire	LUM HPS RWY 50W	Active	50	65485-54003	S-14	CITY OF E PROVIDENCE
9096	000	2	PLAIN	ST	4805	Overhead	Distribution	Luminaire	LUM HPS RWY 50W	Active	50	65485-54003	S-14	CITY OF E PROVIDENCE
0002	000	2	PLANET	AVE	4810	Overhead	Distribution	Luminaire	LUM HPS RWY 50W	Active	50	65485-54003	S-14	CITY OF E PROVIDENCE
0004	000	2	PLANET	AVE	4810	Overhead	Distribution	Luminaire	LUM HPS RWY 50W	Active	50	65485-54003	S-14	CITY OF E PROVIDENCE
0006	000	2	PLANET	AVE	4810	Overhead	Distribution	Luminaire	LUM HPS RWY 50W	Active	50	65485-54003	S-14	CITY OF E PROVIDENCE
0008	000	2	PLANET	AVE	4810	Overhead	Distribution	Luminaire	LUM HPS RWY 50W	Active	50	65485-54003	S-14	CITY OF E PROVIDENCE
0009	000	2	PLANET	AVE	4810	Overhead	Distribution	Luminaire	LUM HPS RWY 50W	Active	50	65485-54003	S-14	CITY OF E PROVIDENCE
0010	000	2	PLANET	AVE	4810	Overhead	Distribution	Luminaire	LUM HPS RWY 50W	Active	50	65485-54003	S-14	CITY OF E PROVIDENCE
0011	000	2	PLANET	AVE	4810	Overhead	Distribution	Luminaire	LUM HPS RWY 50W	Active	50	90426-19008	S-14	CITY OF E PROVIDENCE
0002	000	2	PLAZA	DR	4815	Overhead	Distribution	Luminaire	LUM HPS RWY 50W	Active	50	65485-54003	S-14	CITY OF E PROVIDENCE
0003	000	2	PLAZA	DR	4815	Overhead	Distribution	Luminaire	LUM HPS RWY 50W	Active	50	65485-54003	S-14	CITY OF E PROVIDENCE
0002	000	2	PLEASANT	ST	4820	Overhead	Distribution	Luminaire	LUM HPS RWY 50W	Active	50	65485-54003	S-14	CITY OF E PROVIDENCE
0004	000	2	PLEASANT	ST	4820	Overhead	Distribution	Luminaire	LUM HPS RWY 50W	Active	50	65485-54003	S-14	CITY OF E PROVIDENCE
0006	000	2	PLEASANT	ST	4820	Overhead	Distribution	Luminaire	LUM HPS RWY 50W	Active	50	65485-54003	S-14	CITY OF E PROVIDENCE
0011	000	2	PLEASANT	ST	4820	Overhead	Distribution	Luminaire	LUM HPS RWY 50W	Active	50	65485-54003	S-14	CITY OF E PROVIDENCE
0011	050	2	PLEASANT	ST	4820	Overhead	Distribution	Luminaire	LUM HPS RWY 50W	Active	50	90426-19008	S-14	CITY OF E PROVIDENCE
0012	000	2	PLEASANT	ST	4820	Overhead	Distribution	Luminaire	LUM HPS RWY 50W	Active	50	65485-54003	S-14	CITY OF E PROVIDENCE
0012	050	2	PLEASANT	ST	4820	Overhead	Distribution	Luminaire	LUM HPS RWY 50W	Active	50	65485-54003	S-14	CITY OF E PROVIDENCE
0014	000	2	PLEASANT	ST	4820	Overhead	Distribution	Luminaire	LUM HPS RWY 50W	Active	50	65485-54003	S-14	CITY OF E PROVIDENCE
0016	000	2	PLEASANT	ST	4820	Overhead	Distribution	Luminaire	LUM HPS RWY 50W	Active	50	65485-54003	S-14	CITY OF E PROVIDENCE
0018	000	2	PLEASANT	ST	4820	Overhead	Distribution	Luminaire	LUM HPS RWY 50W	Active	50	65485-54003	S-14	CITY OF E PROVIDENCE
0020	000	2	PLEASANT	ST	4820	Overhead	Distribution	Luminaire	LUM HPS RWY 50W	Active	50	65485-54003	S-14	CITY OF E PROVIDENCE
0022	000	2	PLEASANT	ST	4820	Overhead	Distribution	Luminaire	LUM HPS RWY 50W	Active	50	65485-54003	S-14	CITY OF E PROVIDENCE
0023	000	2	PLEASANT	ST	4820	Overhead	Distribution	Luminaire	LUM HPS RWY 50W TT	Temp Turn Off	50	65485-54003	S-14	CITY OF E PROVIDENCE
0024	000	2	PLEASANT	ST	4820	Overhead	Distribution	Luminaire	LUM HPS RWY 50W	Active	50	65485-54003	S-14	CITY OF E PROVIDENCE
0026	000	2	PLEASANT	ST	4820	Overhead	Distribution	Luminaire	LUM HPS RWY 50W	Active	50	65485-54003	S-14	CITY OF E PROVIDENCE
0027	000	2	PLEASANT	ST	4820	Overhead	Distribution	Luminaire	LUM HPS RWY 250W	Active	250	65485-54003	S-14	CITY OF E PROVIDENCE
0028	050	1	PLEASANT	ST	4820	Overhead	Distribution	Luminaire	LUM HPS RWY 100W	Active	100	65485-54003	S-14	CITY OF E PROVIDENCE
0031	000	1	PLEASANT	ST	4820	Overhead	Distribution	Luminaire	LUM HPS RWY 50W	Active	50	65485-54003	S-14	CITY OF E PROVIDENCE
0033	000	1	PLEASANT	ST	4820	Overhead	Distribution	Luminaire	LUM HPS RWY 100W	Active	100	65485-54003	S-14	CITY OF E PROVIDENCE
0035	000	1	PLEASANT	ST	4820	Overhead	Distribution	Luminaire	LUM HPS RWY 100W	Active	100	65485-54003	S-14	CITY OF E PROVIDENCE
0038	000	1	PLEASANT	ST	4820	Overhead	Distribution	Luminaire	LUM HPS RWY 100W	Active	100	65485-54003	S-14	CITY OF E PROVIDENCE
0040	000	1	PLEASANT	ST	4820	Overhead	Distribution	Luminaire	LUM HPS RWY 100W	Active	100	65485-54003	S-14	CITY OF E PROVIDENCE
0042	000	1	PLEASANT	ST	4820	Overhead	Distribution	Luminaire	LUM HPS RWY 100W	Active	100	65485-54003	S-14	CITY OF E PROVIDENCE
0044	000	1	PLEASANT	ST	4820	Overhead	Distribution	Luminaire	LUM HPS RWY 100W	Active	100	65485-54003	S-14	CITY OF E PROVIDENCE
0046	000	1	PLEASANT	ST	4820	Overhead	Distribution	Luminaire	LUM HPS RWY 100W	Active	100	65485-54003	S-14	CITY OF E PROVIDENCE
0002	000	2	PLUM	RD	4830	Overhead	Distribution	Luminaire	LUM HPS RWY 50W	Active	50	65485-54003	S-14	CITY OF E PROVIDENCE
0004	000	2	PLUM	RD	4830	Overhead	Distribution	Luminaire	LUM HPS RWY 50W	Active	50	65485-54003	S-14	CITY OF E PROVIDENCE

Pole No	Pole Suffix	Light Sequ No	Street Name	Street Suffix	Ngrid Line No	Source Type	Pole Use	Component Type	Bill Print and Tariff Description	Billing Status	Lamp Wattage	Account No	Rate	Customer Name
0005	000	2	PLUM	RD	4830	Overhead	Distribution	Luminaire	LUM HPS RWY 50W TT	Temp Turn Off	50	65485-54003	S-14	CITY OF E PROVIDENCE
0007	000	1	PLUM	RD	4830	Overhead	Distribution	Luminaire	LUM HPS RWY 50W	Active	50	65485-54003	S-14	CITY OF E PROVIDENCE
0007	001	1	PLUM	RD	4830	Overhead	Distribution	Luminaire	LUM HPS RWY 50W	Active	50	65485-54003	S-14	CITY OF E PROVIDENCE
0007	002	1	PLUM	RD	4830	Overhead	Distribution	Luminaire	LUM HPS RWY 50W	Active	50	65485-54003	S-14	CITY OF E PROVIDENCE
0007	003	1	PLUM	RD	4830	Overhead	Distribution	Luminaire	LUM HPS RWY 50W	Active	50	65485-54003	S-14	CITY OF E PROVIDENCE
0007	004	1	PLUM	RD	4830	Overhead	Distribution	Luminaire	LUM HPS RWY 50W	Active	50	65485-54003	S-14	CITY OF E PROVIDENCE
0007	005	1	PLUM	RD	4830	Overhead	Distribution	Luminaire	LUM HPS RWY 50W	Active	50	65485-54003	S-14	CITY OF E PROVIDENCE
0008	000	2	PLUM	RD	4830	Overhead	Distribution	Luminaire	LUM HPS RWY 50W	Active	50	65485-54003	S-14	CITY OF E PROVIDENCE
0009	000	2	PLUM	RD	4830	Overhead	Distribution	Luminaire	LUM HPS RWY 50W TT	Temp Turn Off	50	65485-54003	S-14	CITY OF E PROVIDENCE
0011	000	2	PLUM	RD	4830	Overhead	Distribution	Luminaire	LUM HPS RWY 50W	Active	50	65485-54003	S-14	CITY OF E PROVIDENCE
0001	000	2	PLYMOUTH	RD	4835	Overhead	Distribution	Luminaire	LUM HPS RWY 50W	Active	50	65485-54003	S-14	CITY OF E PROVIDENCE
0003	000	2	PLYMOUTH	RD	4835	Overhead	Distribution	Luminaire	LUM HPS RWY 50W	Active	50	65485-54003	S-14	CITY OF E PROVIDENCE
0004	000	2	PLYMOUTH	RD	4835	Overhead	Distribution	Luminaire	LUM HPS RWY 50W	Active	50	65485-54003	S-14	CITY OF E PROVIDENCE
0005	000	2	PLYMOUTH	RD	4835	Overhead	Distribution	Luminaire	LUM HPS RWY 50W	Active	50	65485-54003	S-14	CITY OF E PROVIDENCE
0006	000	2	PLYMOUTH	RD	4835	Overhead	Distribution	Luminaire	LUM HPS RWY 50W	Active	50	65485-54003	S-14	CITY OF E PROVIDENCE
0007	000	2	PLYMOUTH	RD	4835	Overhead	Distribution	Luminaire	LUM HPS RWY 50W	Active	50	65485-54003	S-14	CITY OF E PROVIDENCE
0008	000	2	PLYMOUTH	RD	4835	Overhead	Distribution	Luminaire	LUM HPS RWY 50W	Active	50	65485-54003	S-14	CITY OF E PROVIDENCE
0009	000	2	PLYMOUTH	RD	4835	Overhead	Distribution	Luminaire	LUM HPS RWY 50W	Active	50	65485-54003	S-14	CITY OF E PROVIDENCE
0010	000	2	PLYMOUTH	RD	4835	Overhead	Distribution	Luminaire	LUM HPS RWY 50W	Active	50	65485-54003	S-14	CITY OF E PROVIDENCE
0011	000	2	PLYMOUTH	RD	4835	Overhead	Distribution	Luminaire	LUM HPS RWY 50W	Active	50	65485-54003	S-14	CITY OF E PROVIDENCE
0012	000	2	PLYMOUTH	RD	4835	Overhead	Distribution	Luminaire	LUM HPS RWY 50W	Active	50	65485-54003	S-14	CITY OF E PROVIDENCE
0013	000	2	PLYMOUTH	RD	4835	Overhead	Distribution	Luminaire	LUM HPS RWY 50W	Active	50	65485-54003	S-14	CITY OF E PROVIDENCE
0014	000	2	PLYMOUTH	RD	4835	Overhead	Distribution	Luminaire	LUM HPS RWY 50W TT	Temp Turn Off	50	65485-54003	S-14	CITY OF E PROVIDENCE
0002	000	2	POKANOKET	AVE	4850	Overhead	Distribution	Luminaire	LUM HPS RWY 50W	Active	50	65485-54003	S-14	CITY OF E PROVIDENCE
0002	000	2	POPLAR	AVE	4870	Overhead	Distribution	Luminaire	LUM HPS RWY 50W	Active	50	90426-19008	S-14	CITY OF E PROVIDENCE
0001	000	2	PORTLAND	ST	4875	Overhead	Distribution	Luminaire	LUM HPS RWY 50W	Active	50	65485-54003	S-14	CITY OF E PROVIDENCE
0006	000	2	PORTLAND	ST	4875	Overhead	Distribution	Luminaire	LUM HPS RWY 50W	Active	50	90426-19008	S-14	CITY OF E PROVIDENCE
0001	000	2	POTTER	ST	4880	Overhead	Distribution	Luminaire	LUM HPS RWY 50W	Active	50	65485-54003	S-14	CITY OF E PROVIDENCE
0003	000	1	POTTER	ST	4880	Overhead	Distribution	Luminaire	LUM HPS RWY 50W	Active	50	65485-54003	S-14	CITY OF E PROVIDENCE
0005	000	1	POTTER	ST	4880	Overhead	Distribution	Luminaire	LUM HPS RWY 50W	Active	50	90426-19008	S-14	CITY OF E PROVIDENCE
0006	000	2	POTTER	ST	4880	Overhead	Distribution	Luminaire	LUM HPS RWY 100W TT	Temp Turn Off	100	65485-54003	S-14	CITY OF E PROVIDENCE
0008	000	1	POTTER	ST	4880	Overhead	Distribution	Luminaire	LUM HPS RWY 50W	Active	50	65485-54003	S-14	CITY OF E PROVIDENCE
0009	000	1	POTTER	ST	4880	Overhead	Distribution	Luminaire	LUM HPS RWY 50W	Active	50	65485-54003	S-14	CITY OF E PROVIDENCE
0002	000	2	PRESCOTT	AVE	4890	Overhead	Distribution	Luminaire	LUM HPS RWY 50W	Active	50	65485-54003	S-14	CITY OF E PROVIDENCE
0004	000	2	PRESCOTT	AVE	4890	Overhead	Distribution	Luminaire	LUM HPS RWY 50W	Active	50	65485-54003	S-14	CITY OF E PROVIDENCE
0006	000	2	PRESCOTT	AVE	4890	Overhead	Distribution	Luminaire	LUM HPS RWY 50W	Active	50	65485-54003	S-14	CITY OF E PROVIDENCE
0007	000	2	PRESCOTT	AVE	4890	Overhead	Distribution	Luminaire	LUM HPS RWY 50W	Active	50	65485-54003	S-14	CITY OF E PROVIDENCE
0009	000	2	PRESCOTT	AVE	4890	Overhead	Distribution	Luminaire	LUM HPS RWY 50W	Active	50	65485-54003	S-14	CITY OF E PROVIDENCE
0011	000	2	PRESCOTT	AVE	4890	Overhead	Distribution	Luminaire	LUM HPS RWY 50W	Active	50	65485-54003	S-14	CITY OF E PROVIDENCE
0012	000	2	PRESCOTT	AVE	4890	Overhead	Distribution	Luminaire	LUM HPS RWY 50W	Active	50	65485-54003	S-14	CITY OF E PROVIDENCE
0014	000	2	PRESCOTT	AVE	4890	Overhead	Distribution	Luminaire	LUM HPS RWY 50W	Active	50	90426-19008	S-14	CITY OF E PROVIDENCE
0015	000	2	PRESCOTT	AVE	4890	Overhead	Distribution	Luminaire	LUM HPS RWY 50W	Active	50	90426-19008	S-14	CITY OF E PROVIDENCE
0000	050	1	PRESIDENT	AVE	4900	Overhead	Distribution	Luminaire	LUM HPS RWY 50W	Active	50	65485-54003	S-14	CITY OF E PROVIDENCE
0002	000	2	PRESIDENT	AVE	4900	Overhead	Distribution	Luminaire	LUM HPS RWY 50W	Active	50	65485-54003	S-14	CITY OF E PROVIDENCE
0003	000	2	PRESIDENT	AVE	4900	Overhead	Distribution	Luminaire	LUM HPS RWY 50W	Active	50	65485-54003	S-14	CITY OF E PROVIDENCE
0004	000	2	PRESIDENT	AVE	4900	Overhead	Distribution	Luminaire	LUM HPS RWY 50W	Active	50	65485-54003	S-14	CITY OF E PROVIDENCE
0002	000	2	PRIMROSE	DR	4905	Overhead	Distribution	Luminaire	LUM HPS RWY 50W	Active	50	65485-54003	S-14	CITY OF E PROVIDENCE
0004	000	2	PRIMROSE	DR	4905	Overhead	Distribution	Luminaire	LUM HPS RWY 50W	Active	50	65485-54003	S-14	CITY OF E PROVIDENCE
0005	000	2	PRIMROSE	DR	4905	Overhead	Distribution	Luminaire	LUM HPS RWY 50W	Active	50	65485-54003	S-14	CITY OF E PROVIDENCE
0002	000	1	PRISCILLA	AVE	4915	Overhead	Distribution	Luminaire	LUM HPS RWY 50W TT	Temp Turn Off	50	65485-54003	S-14	CITY OF E PROVIDENCE
0004	000	2	PRISCILLA	AVE	4915	Overhead	Distribution	Luminaire	LUM HPS RWY 50W	Active	50	65485-54003	S-14	CITY OF E PROVIDENCE
0001	000	1	PROGRESS	AVE	4920	Overhead	Distribution	Luminaire	LUM HPS RWY 50W	Active	50	65485-54003	S-14	CITY OF E PROVIDENCE
0002	000	1	PROGRESS	AVE	4920	Overhead	Distribution	Luminaire	LUM HPS RWY 50W	Active	50	65485-54003	S-14	CITY OF E PROVIDENCE
0004	000	1	PROGRESS	AVE	4920	Overhead	Distribution	Luminaire	LUM HPS RWY 50W	Active	50	65485-54003	S-14	CITY OF E PROVIDENCE
0001	000	2	PROMENADE	ST	4925	Overhead	Distribution	Luminaire	LUM HPS RWY 50W	Active	50	65485-54003	S-14	CITY OF E PROVIDENCE

Pole No	Pole Suffix	Light Sequ No	Street Name	Street Suffix	Ngrid Line No	Source Type	Pole Use	Component Type	Bill Print and Tariff Description	Billing Status	Lamp Wattage	Account No	Rate	Customer Name
0002	000	2	PROMENADE	ST	4925	Overhead	Distribution	Luminaire	LUM HPS RWY 50W	Active	50	65485-54003	S-14	CITY OF E PROVIDENCE
0003	000	2	PROMENADE	ST	4925	Overhead	Distribution	Luminaire	LUM HPS RWY 50W	Active	50	65485-54003	S-14	CITY OF E PROVIDENCE
0004	000	2	PROMENADE	ST	4925	Overhead	Distribution	Luminaire	LUM HPS RWY 50W	Active	50	65485-54003	S-14	CITY OF E PROVIDENCE
0006	000	2	PROMENADE	ST	4925	Overhead	Distribution	Luminaire	LUM HPS RWY 50W	Active	50	65485-54003	S-14	CITY OF E PROVIDENCE
0008	000	2	PROMENADE	ST	4925	Overhead	Distribution	Luminaire	LUM HPS RWY 50W	Active	50	65485-54003	S-14	CITY OF E PROVIDENCE
0009	000	2	PROMENADE	ST	4925	Overhead	Distribution	Luminaire	LUM HPS RWY 100W TT	Temp Turn Off	100	90426-19008	S-14	CITY OF E PROVIDENCE
0010	000	2	PROMENADE	ST	4925	Overhead	Distribution	Luminaire	LUM HPS RWY 50W	Active	50	65485-54003	S-14	CITY OF E PROVIDENCE
0000	050	2	PROVIDENCE	AVE	4940	Overhead	Distribution	Luminaire	LUM HPS RWY 50W	Active	50	65485-54003	S-14	CITY OF E PROVIDENCE
0002	000	2	PROVIDENCE	AVE	4940	Overhead	Distribution	Luminaire	LUM HPS RWY 50W	Active	50	65485-54003	S-14	CITY OF E PROVIDENCE
0004	000	2	PROVIDENCE	AVE	4940	Overhead	Distribution	Luminaire	LUM HPS RWY 50W	Active	50	65485-54003	S-14	CITY OF E PROVIDENCE
0005	000	2	PROVIDENCE	AVE	4940	Overhead	Distribution	Luminaire	LUM HPS RWY 50W	Active	50	65485-54003	S-14	CITY OF E PROVIDENCE
0006	000	2	PROVIDENCE	AVE	4940	Overhead	Distribution	Luminaire	LUM HPS RWY 50W TT	Temp Turn Off	50	65485-54003	S-14	CITY OF E PROVIDENCE
0007	000	2	PROVIDENCE	AVE	4940	Overhead	Distribution	Luminaire	LUM HPS RWY 50W	Active	50	65485-54003	S-14	CITY OF E PROVIDENCE
0009	000	2	PROVIDENCE	AVE	4940	Overhead	Distribution	Luminaire	LUM HPS RWY 50W	Active	50	65485-54003	S-14	CITY OF E PROVIDENCE
0012	000	2	PROVIDENCE	AVE	4940	Overhead	Distribution	Luminaire	LUM HPS RWY 50W	Active	50	65485-54003	S-14	CITY OF E PROVIDENCE
0014	000	2	PROVIDENCE	AVE	4940	Overhead	Distribution	Luminaire	LUM HPS RWY 50W TT	Temp Turn Off	50	65485-54003	S-14	CITY OF E PROVIDENCE
0015	000	2	PROVIDENCE	AVE	4940	Overhead	Distribution	Luminaire	LUM HPS RWY 50W	Active	50	65485-54003	S-14	CITY OF E PROVIDENCE
0016	000	2	PROVIDENCE	AVE	4940	Overhead	Distribution	Luminaire	LUM HPS RWY 50W	Active	50	65485-54003	S-14	CITY OF E PROVIDENCE
0018	000	2	PROVIDENCE	AVE	4940	Overhead	Distribution	Luminaire	LUM HPS RWY 50W	Active	50	65485-54003	S-14	CITY OF E PROVIDENCE
0019	000	2	PROVIDENCE	AVE	4940	Overhead	Distribution	Luminaire	LUM HPS RWY 50W	Active	50	65485-54003	S-14	CITY OF E PROVIDENCE
0020	000	2	PROVIDENCE	AVE	4940	Overhead	Distribution	Luminaire	LUM HPS RWY 50W TT	Temp Turn Off	50	65485-54003	S-14	CITY OF E PROVIDENCE
0021	000	2	PROVIDENCE	AVE	4940	Overhead	Distribution	Luminaire	LUM HPS RWY 50W	Active	50	65485-54003	S-14	CITY OF E PROVIDENCE
0002	000	2	PUBLIC	ST	4945	Overhead	Distribution	Luminaire	LUM HPS RWY 50W	Active	50	65485-54003	S-14	CITY OF E PROVIDENCE
0001	000	1	PURCHASE	ST	4950	Overhead	Distribution	Luminaire	LUM HPS RWY 50W	Active	50	65485-54003	S-14	CITY OF E PROVIDENCE
0003	000	1	PURCHASE	ST	4950	Overhead	Distribution	Luminaire	LUM HPS RWY 50W	Active	50	65485-54003	S-14	CITY OF E PROVIDENCE
0005	000	1	PURCHASE	ST	4950	Overhead	Distribution	Luminaire	LUM HPS RWY 50W	Active	50	65485-54003	S-14	CITY OF E PROVIDENCE
0007	000	1	PURCHASE	ST	4950	Overhead	Distribution	Luminaire	LUM HPS RWY 50W	Active	50	65485-54003	S-14	CITY OF E PROVIDENCE
0008	000	1	PURCHASE	ST	4950	Overhead	Distribution	Luminaire	LUM HPS RWY 50W	Active	50	65485-54003	S-14	CITY OF E PROVIDENCE
0011	000	1	PURCHASE	ST	4950	Overhead	Distribution	Luminaire	LUM HPS RWY 50W	Active	50	65485-54003	S-14	CITY OF E PROVIDENCE
0012	000	1	PURCHASE	ST	4950	Overhead	Distribution	Luminaire	LUM HPS RWY 50W	Active	50	65485-54003	S-14	CITY OF E PROVIDENCE
0002	000	2	PURITAN	AVE	4955	Overhead	Distribution	Luminaire	LUM HPS RWY 50W	Active	50	65485-54003	S-14	CITY OF E PROVIDENCE
0003	000	2	PURITAN	AVE	4955	Overhead	Distribution	Luminaire	LUM HPS RWY 50W TT	Temp Turn Off	50	65485-54003	S-14	CITY OF E PROVIDENCE
0004	000	2	PURITAN	AVE	4955	Overhead	Distribution	Luminaire	LUM HPS RWY 50W	Active	50	65485-54003	S-14	CITY OF E PROVIDENCE
0005	000	2	PURITAN	AVE	4955	Overhead	Distribution	Luminaire	LUM HPS RWY 50W TT	Temp Turn Off	50	65485-54003	S-14	CITY OF E PROVIDENCE
0002	000	2	PUTNAM	ST	4960	Overhead	Distribution	Luminaire	LUM HPS RWY 50W TT	Temp Turn Off	50	90426-19008	S-14	CITY OF E PROVIDENCE
0003	000	2	PUTNAM	ST	4960	Overhead	Distribution	Luminaire	LUM HPS RWY 50W	Active	50	65485-54003	S-14	CITY OF E PROVIDENCE
0005	000	2	PUTNAM	ST	4960	Overhead	Distribution	Luminaire	LUM HPS RWY 50W	Active	50	65485-54003	S-14	CITY OF E PROVIDENCE
0006	000	2	PUTNAM	ST	4960	Overhead	Distribution	Luminaire	LUM HPS RWY 50W	Active	50	65485-54003	S-14	CITY OF E PROVIDENCE
0006	000	2	QUARRY	ST	4965	Overhead	Distribution	Luminaire	LUM HPS RWY 50W	Active	50	65485-54003	S-14	CITY OF E PROVIDENCE
0008	050	2	QUARRY	ST	4965	Overhead	Distribution	Luminaire	LUM HPS RWY 50W	Active	50	65485-54003	S-14	CITY OF E PROVIDENCE
0012	000	2	QUARRY	ST	4965	Overhead	Distribution	Luminaire	LUM HPS RWY 50W	Active	50	65485-54003	S-14	CITY OF E PROVIDENCE
0014	000	2	QUARRY	ST	4965	Overhead	Distribution	Luminaire	LUM HPS RWY 50W	Active	50	65485-54003	S-14	CITY OF E PROVIDENCE
0015	000	2	QUARRY	ST	4965	Overhead	Distribution	Luminaire	LUM HPS RWY 50W TT	Temp Turn Off	50	65485-54003	S-14	CITY OF E PROVIDENCE
0001	000	2	RACHELLA	CT	4972	Overhead	Distribution	Luminaire	LUM HPS RWY 50W	Active	50	90426-19008	S-14	CITY OF E PROVIDENCE
0003	000	2	RACHELLA	CT	4972	Overhead	Distribution	Luminaire	LUM HPS RWY 50W	Active	50	90426-19008	S-14	CITY OF E PROVIDENCE
0005	000	2	RACHELLA	CT	4972	Overhead	Distribution	Luminaire	LUM HPS RWY 50W	Active	50	90426-19008	S-14	CITY OF E PROVIDENCE
0007	000	2	RACHELLA	CT	4972	Overhead	Distribution	Luminaire	LUM HPS RWY 50W	Active	50	90426-19008	S-14	CITY OF E PROVIDENCE
0009	000	2	RACHELLA	CT	4972	Overhead	Distribution	Luminaire	LUM HPS RWY 50W	Active	50	90426-19008	S-14	CITY OF E PROVIDENCE
0011	000	2	RACHELLA	CT	4972	Overhead	Distribution	Luminaire	LUM HPS RWY 50W	Active	50	90426-19008	S-14	CITY OF E PROVIDENCE
0014	000	2	RACHELLA	CT	4972	Overhead	Distribution	Luminaire	LUM HPS RWY 50W	Active	50	90426-19008	S-14	CITY OF E PROVIDENCE
0016	000	2	RACHELLA	CT	4972	Overhead	Distribution	Luminaire	LUM HPS RWY 50W	Active	50	90426-19008	S-14	CITY OF E PROVIDENCE
0002	000	2	RAMSEY	ST	4980	Overhead	Distribution	Luminaire	LUM HPS RWY 50W	Active	50	65485-54003	S-14	CITY OF E PROVIDENCE
0004	050	2	RAMSEY	ST	4980	Overhead	Distribution	Luminaire	LUM HPS RWY 50W	Active	50	65485-54003	S-14	CITY OF E PROVIDENCE
0005	000	2	RAMSEY	ST	4980	Overhead	Distribution	Luminaire	LUM HPS RWY 50W	Active	50	65485-54003	S-14	CITY OF E PROVIDENCE
0005	025	2	RAMSEY	ST	4980	Overhead	Distribution	Luminaire	LUM HPS RWY 50W TT	Temp Turn Off	50	65485-54003	S-14	CITY OF E PROVIDENCE

Pole No	Pole Suffix	Light Sequ No	Street Name	Street Suffix	Ngrid Line No	Source Type	Pole Use	Component Type	Bill Print and Tariff Description	Billing Status	Lamp Wattage	Account No	Rate	Customer Name
0001	000	2	RANDOLPH	ST	4985	Overhead	Distribution	Luminaire	LUM HPS RWY 50W	Active	50	65485-54003	S-14	CITY OF E PROVIDENCE
0003	000	2	RANDOLPH	ST	4985	Overhead	Distribution	Luminaire	LUM HPS RWY 50W	Active	50	65485-54003	S-14	CITY OF E PROVIDENCE
0001	000	2	RAVENA	AVE	4990	Overhead	Distribution	Luminaire	LUM HPS RWY 50W	Active	50	65485-54003	S-14	CITY OF E PROVIDENCE
0002	000	2	RAVENA	AVE	4990	Overhead	Distribution	Luminaire	LUM HPS RWY 50W	Active	50	65485-54003	S-14	CITY OF E PROVIDENCE
0002	000	2	RAY	ST	4995	Overhead	Distribution	Luminaire	LUM HPS RWY 50W TT	Temp Turn Off	50	65485-54003	S-14	CITY OF E PROVIDENCE
0003	000	2	RAY	ST	4995	Overhead	Distribution	Luminaire	LUM HPS RWY 50W TT	Temp Turn Off	50	90426-19008	S-14	CITY OF E PROVIDENCE
0002	000	2	RAYMOND	ST	6000	Overhead	Distribution	Luminaire	LUM HPS RWY 50W	Active	50	65485-54003	S-14	CITY OF E PROVIDENCE
0004	000	2	RAYMOND	ST	6000	Overhead	Distribution	Luminaire	LUM HPS RWY 50W	Active	50	65485-54003	S-14	CITY OF E PROVIDENCE
0006	000	2	RAYMOND	ST	6000	Overhead	Distribution	Luminaire	LUM HPS RWY 50W	Active	50	65485-54003	S-14	CITY OF E PROVIDENCE
0007	000	2	RAYMOND	ST	6000	Overhead	Distribution	Luminaire	LUM HPS RWY 50W	Active	50	65485-54003	S-14	CITY OF E PROVIDENCE
0001	000	2	READ	ST	6005	Overhead	Distribution	Luminaire	LUM HPS RWY 50W TT	Temp Turn Off	50	65485-54003	S-14	CITY OF E PROVIDENCE
0003	000	2	READ	ST	6005	Overhead	Distribution	Luminaire	LUM HPS RWY 50W	Active	50	65485-54003	S-14	CITY OF E PROVIDENCE
0004	000	2	READ	ST	6005	Overhead	Distribution	Luminaire	LUM HPS RWY 50W	Active	50	65485-54003	S-14	CITY OF E PROVIDENCE
0009	000	2	READ	ST	6005	Overhead	Distribution	Luminaire	LUM HPS RWY 50W	Active	50	65485-54003	S-14	CITY OF E PROVIDENCE
0011	000	2	READ	ST	6005	Overhead	Distribution	Luminaire	LUM HPS RWY 50W	Active	50	65485-54003	S-14	CITY OF E PROVIDENCE
0013	000	2	READ	ST	6005	Overhead	Distribution	Luminaire	LUM HPS RWY 50W	Active	50	65485-54003	S-14	CITY OF E PROVIDENCE
0002	000	2	REARDON	AVE	6010	Overhead	Distribution	Luminaire	LUM HPS RWY 50W	Active	50	65485-54003	S-14	CITY OF E PROVIDENCE
0004	000	2	REARDON	AVE	6010	Overhead	Distribution	Luminaire	LUM HPS RWY 50W	Active	50	65485-54003	S-14	CITY OF E PROVIDENCE
0006	000	2	REARDON	AVE	6010	Overhead	Distribution	Luminaire	LUM HPS RWY 50W	Active	50	90426-19008	S-14	CITY OF E PROVIDENCE
0001	000	2	RED FERN	ST	6015	Overhead	Distribution	Luminaire	LUM HPS RWY 50W TT	Temp Turn Off	50	65485-54003	S-14	CITY OF E PROVIDENCE
0002	000	2	RED FERN	ST	6015	Overhead	Distribution	Luminaire	LUM HPS RWY 50W	Active	50	65485-54003	S-14	CITY OF E PROVIDENCE
0004	000	2	RED FERN	ST	6015	Overhead	Distribution	Luminaire	LUM HPS RWY 50W	Active	50	65485-54003	S-14	CITY OF E PROVIDENCE
0001	000	2	REDLAND	AVE	6020	Overhead	Distribution	Luminaire	LUM HPS RWY 50W	Active	50	65485-54003	S-14	CITY OF E PROVIDENCE
0003	000	2	REDLAND	AVE	6020	Overhead	Distribution	Luminaire	LUM HPS RWY 50W TT	Temp Turn Off	50	65485-54003	S-14	CITY OF E PROVIDENCE
0005	000	2	REDLAND	AVE	6020	Overhead	Distribution	Luminaire	LUM HPS RWY 50W	Active	50	65485-54003	S-14	CITY OF E PROVIDENCE
0007	000	2	REDLAND	AVE	6020	Overhead	Distribution	Luminaire	LUM HPS RWY 50W TT	Temp Turn Off	50	65485-54003	S-14	CITY OF E PROVIDENCE
0008	000	2	REDLAND	AVE	6020	Overhead	Distribution	Luminaire	LUM HPS RWY 50W	Active	50	65485-54003	S-14	CITY OF E PROVIDENCE
0010	000	2	REDLAND	AVE	6020	Overhead	Distribution	Luminaire	LUM HPS RWY 50W	Active	50	65485-54003	S-14	CITY OF E PROVIDENCE
0012	000	2	REDLAND	AVE	6020	Overhead	Distribution	Luminaire	LUM HPS RWY 50W TT	Temp Turn Off	50	65485-54003	S-14	CITY OF E PROVIDENCE
0013	000	2	REDLAND	AVE	6020	Overhead	Distribution	Luminaire	LUM HPS RWY 50W	Active	50	65485-54003	S-14	CITY OF E PROVIDENCE
0016	000	2	REDLAND	AVE	6020	Overhead	Distribution	Luminaire	LUM HPS RWY 50W TT	Temp Turn Off	50	65485-54003	S-14	CITY OF E PROVIDENCE
0005	000	1	REDWAY	CIR	6025	Overhead	Distribution	Luminaire	LUM HPS RWY 50W	Inactive	50	65485-54003	S-14	CITY OF E PROVIDENCE
0006	000	1	REDWAY	CIR	6025	Overhead	Distribution	Luminaire	LUM HPS RWY 50W	Inactive	50	65485-54003	S-14	CITY OF E PROVIDENCE
0001	000	2	REGENT	DR	6030	Overhead	Distribution	Luminaire	LUM HPS RWY 50W	Active	50	65485-54003	S-14	CITY OF E PROVIDENCE
0002	000	2	RESERVOIR	AVE	6040	Overhead	Distribution	Luminaire	LUM HPS RWY 50W	Active	50	65485-54003	S-14	CITY OF E PROVIDENCE
0004	000	2	REYNOLDS	ST	6050	Overhead	Distribution	Luminaire	LUM HPS RWY 50W	Active	50	65485-54003	S-14	CITY OF E PROVIDENCE
0005	000	2	REYNOLDS	ST	6050	Overhead	Distribution	Luminaire	LUM HPS RWY 50W TT	Temp Turn Off	50	65485-54003	S-14	CITY OF E PROVIDENCE
0006	000	2	REYNOLDS	ST	6050	Overhead	Distribution	Luminaire	LUM HPS RWY 50W	Active	50	65485-54003	S-14	CITY OF E PROVIDENCE
0007	000	2	REYNOLDS	ST	6050	Overhead	Distribution	Luminaire	LUM HPS RWY 50W TT	Temp Turn Off	50	65485-54003	S-14	CITY OF E PROVIDENCE
0001	000	2	RHODES	AVE	6055	Overhead	Distribution	Luminaire	LUM HPS RWY 50W	Active	50	65485-54003	S-14	CITY OF E PROVIDENCE
0002	000	2	RHODES	AVE	6055	Overhead	Distribution	Luminaire	LUM HPS RWY 50W TT	Temp Turn Off	50	65485-54003	S-14	CITY OF E PROVIDENCE
0003	000	2	RHODES	AVE	6055	Overhead	Distribution	Luminaire	LUM HPS RWY 50W	Active	50	65485-54003	S-14	CITY OF E PROVIDENCE
0004	000	2	RHODES	AVE	6055	Overhead	Distribution	Luminaire	LUM HPS RWY 50W TT	Temp Turn Off	50	65485-54003	S-14	CITY OF E PROVIDENCE
0001	000	2	RICE	AVE	6060	Overhead	Distribution	Luminaire	LUM HPS RWY 50W	Active	50	65485-54003	S-14	CITY OF E PROVIDENCE
0002	000	2	RICE	AVE	6060	Overhead	Distribution	Luminaire	LUM HPS RWY 50W TT	Temp Turn Off	50	65485-54003	S-14	CITY OF E PROVIDENCE
0004	000	2	RICE	AVE	6060	Overhead	Distribution	Luminaire	LUM HPS RWY 50W	Active	50	65485-54003	S-14	CITY OF E PROVIDENCE
0005	000	2	RICE	AVE	6060	Overhead	Distribution	Luminaire	LUM HPS RWY 50W	Active	50	65485-54003	S-14	CITY OF E PROVIDENCE
0006	000	2	RICE	AVE	6060	Overhead	Distribution	Luminaire	LUM HPS RWY 50W	Active	50	65485-54003	S-14	CITY OF E PROVIDENCE
0007	000	1	RICE	AVE	6060	Overhead	Distribution	Luminaire	LUM HPS RWY 50W	Active	50	65485-54003	S-14	CITY OF E PROVIDENCE
0008	050	2	RICE	AVE	6060	Overhead	Distribution	Luminaire	LUM HPS RWY 100W	Active	100	65485-54003	S-14	CITY OF E PROVIDENCE
0009	000	2	RICE	AVE	6060	Overhead	Distribution	Luminaire	LUM HPS RWY 50W	Active	50	65485-54003	S-14	CITY OF E PROVIDENCE
0010	000	2	RICE	AVE	6060	Overhead	Distribution	Luminaire	LUM HPS RWY 50W	Active	50	65485-54003	S-14	CITY OF E PROVIDENCE
0011	000	2	RICE	AVE	6060	Overhead	Distribution	Luminaire	LUM HPS RWY 50W	Active	50	65485-54003	S-14	CITY OF E PROVIDENCE
0012	000	1	RICE	AVE	6060	Overhead	Distribution	Luminaire	LUM HPS RWY 50W	Active	50	65485-54003	S-14	CITY OF E PROVIDENCE
0013	000	2	RICE	AVE	6060	Overhead	Distribution	Luminaire	LUM HPS RWY 50W	Active	50	65485-54003	S-14	CITY OF E PROVIDENCE

Pole No	Pole Suffix	Light Sequ No	Street Name	Street Suffix	Ngrid Line No	Source Type	Pole Use	Component Type	Bill Print and Tariff Description	Billing Status	Lamp Wattage	Account No	Rate	Customer Name
0015	000	1	RICE	AVE	6060	Overhead	Distribution	Luminaire	LUM HPS RWY 50W	Active	50	65485-54003	S-14	CITY OF E PROVIDENCE
0017	000	1	RICE	AVE	6060	Overhead	Distribution	Luminaire	LUM HPS RWY 50W	Active	50	65485-54003	S-14	CITY OF E PROVIDENCE
0002	000	2	RICH	ST	6065	Overhead	Distribution	Luminaire	LUM HPS RWY 50W	Active	50	65485-54003	S-14	CITY OF E PROVIDENCE
0001	000	2	RICHFIELD	AVE	6070	Overhead	Distribution	Luminaire	LUM HPS RWY 50W TT	Temp Turn Off	50	65485-54003	S-14	CITY OF E PROVIDENCE
0003	000	2	RICHFIELD	AVE	6070	Overhead	Distribution	Luminaire	LUM HPS RWY 50W	Active	50	65485-54003	S-14	CITY OF E PROVIDENCE
0004	000	2	RICHFIELD	AVE	6070	Overhead	Distribution	Luminaire	LUM HPS RWY 50W TT	Temp Turn Off	50	65485-54003	S-14	CITY OF E PROVIDENCE
0005	000	1	RICHFIELD	AVE	6070	Overhead	Distribution	Luminaire	LUM HPS RWY 50W	Active	50	65485-54003	S-14	CITY OF E PROVIDENCE
0006	000	2	RICHFIELD	AVE	6070	Overhead	Distribution	Luminaire	LUM HPS RWY 50W TT	Temp Turn Off	50	65485-54003	S-14	CITY OF E PROVIDENCE
0008	000	2	RICHFIELD	AVE	6070	Overhead	Distribution	Luminaire	LUM HPS RWY 50W	Active	50	65485-54003	S-14	CITY OF E PROVIDENCE
0010	000	2	RICHFIELD	AVE	6070	Overhead	Distribution	Luminaire	LUM HPS RWY 50W	Active	50	65485-54003	S-14	CITY OF E PROVIDENCE
0011	000	2	RICHFIELD	AVE	6070	Overhead	Distribution	Luminaire	LUM HPS RWY 50W	Active	50	90426-19008	S-14	CITY OF E PROVIDENCE
0012	000	2	RICHFIELD	AVE	6070	Overhead	Distribution	Luminaire	LUM HPS RWY 50W	Active	50	65485-54003	S-14	CITY OF E PROVIDENCE
0014	000	1	RICHFIELD	AVE	6070	Overhead	Distribution	Luminaire	LUM HPS RWY 50W	Active	50	65485-54003	S-14	CITY OF E PROVIDENCE
0001	000	2	RIDGE	RD	6080	Overhead	Distribution	Luminaire	LUM HPS RWY 50W	Active	50	65485-54003	S-14	CITY OF E PROVIDENCE
0002	000	2	RIDGE	RD	6080	Overhead	Distribution	Luminaire	LUM HPS RWY 50W TT	Temp Turn Off	50	65485-54003	S-14	CITY OF E PROVIDENCE
0003	000	2	RIDGE	RD	6080	Overhead	Distribution	Luminaire	LUM HPS RWY 50W	Active	50	65485-54003	S-14	CITY OF E PROVIDENCE
0005	000	2	RIDGE	RD	6080	Overhead	Distribution	Luminaire	LUM HPS RWY 50W	Active	50	65485-54003	S-14	CITY OF E PROVIDENCE
0001	000	2	RIDGEWOOD	DR	6085	Overhead	Distribution	Luminaire	LUM HPS RWY 50W TT	Temp Turn Off	50	65485-54003	S-14	CITY OF E PROVIDENCE
0002	000	2	RIDGEWOOD	DR	6085	Overhead	Distribution	Luminaire	LUM HPS RWY 50W	Active	50	65485-54003	S-14	CITY OF E PROVIDENCE
0003	000	2	RIDGEWOOD	DR	6085	Overhead	Distribution	Luminaire	LUM HPS RWY 50W	Active	50	65485-54003	S-14	CITY OF E PROVIDENCE
0001	000	2	RILEY	DR	6090	Overhead	Distribution	Luminaire	LUM HPS RWY 50W	Active	50	90426-19008	S-14	CITY OF E PROVIDENCE
0003	000	2	RILEY	DR	6090	Overhead	Distribution	Luminaire	LUM HPS RWY 50W	Active	50	65485-54003	S-14	CITY OF E PROVIDENCE
0004	000	2	RILEY	DR	6090	Overhead	Distribution	Luminaire	LUM HPS RWY 50W	Active	50	65485-54003	S-14	CITY OF E PROVIDENCE
0006	000	2	RILEY	DR	6090	Overhead	Distribution	Luminaire	LUM HPS RWY 50W	Active	50	65485-54003	S-14	CITY OF E PROVIDENCE
0001	000	2	RIVER	ST	6095	Overhead	Distribution	Luminaire	LUM HPS RWY 50W	Active	50	65485-54003	S-14	CITY OF E PROVIDENCE
0004	000	2	RIVER	ST	6095	Overhead	Distribution	Luminaire	LUM HPS RWY 50W	Active	50	65485-54003	S-14	CITY OF E PROVIDENCE
0005	000	2	RIVER	ST	6095	Overhead	Distribution	Luminaire	LUM HPS RWY 50W TT	Temp Turn Off	50	65485-54003	S-14	CITY OF E PROVIDENCE
0006	000	2	RIVER	ST	6095	Overhead	Distribution	Luminaire	LUM HPS RWY 50W	Active	50	65485-54003	S-14	CITY OF E PROVIDENCE
0008	000	2	RIVER	ST	6095	Overhead	Distribution	Luminaire	LUM HPS RWY 50W TT	Temp Turn Off	50	65485-54003	S-14	CITY OF E PROVIDENCE
0009	000	2	RIVER	ST	6095	Overhead	Distribution	Luminaire	LUM HPS RWY 50W	Active	50	65485-54003	S-14	CITY OF E PROVIDENCE
0012	000	2	RIVER	ST	6095	Overhead	Distribution	Luminaire	LUM HPS RWY 50W	Active	50	65485-54003	S-14	CITY OF E PROVIDENCE
0014	000	2	RIVER	ST	6095	Overhead	Distribution	Luminaire	LUM HPS RWY 50W	Active	50	65485-54003	S-14	CITY OF E PROVIDENCE
0015	000	2	RIVER	ST	6095	Overhead	Distribution	Luminaire	LUM HPS RWY 50W	Active	50	90426-19008	S-14	CITY OF E PROVIDENCE
0017	000	2	RIVER	ST	6095	Overhead	Distribution	Luminaire	LUM HPS RWY 50W	Active	50	65485-54003	S-14	CITY OF E PROVIDENCE
0001	000	2	RIVERSIDE	DR	6100	Overhead	Distribution	Luminaire	LUM HPS RWY 50W	Active	50	90426-19008	S-14	CITY OF E PROVIDENCE
0003	000	2	RIVERSIDE	DR	6100	Overhead	Distribution	Luminaire	LUM HPS RWY 50W	Active	50	90426-19008	S-14	CITY OF E PROVIDENCE
0005	000	2	RIVERSIDE	DR	6100	Overhead	Distribution	Luminaire	LUM HPS RWY 50W	Active	50	90426-19008	S-14	CITY OF E PROVIDENCE
0007	000	2	RIVERSIDE	DR	6100	Overhead	Distribution	Luminaire	LUM HPS RWY 50W	Active	50	90426-19008	S-14	CITY OF E PROVIDENCE
0009	000	2	RIVERSIDE	DR	6100	Overhead	Distribution	Luminaire	LUM HPS RWY 50W	Active	50	90426-19008	S-14	CITY OF E PROVIDENCE
0011	000	2	RIVERSIDE	DR	6100	Overhead	Distribution	Luminaire	LUM HPS RWY 50W	Active	50	90426-19008	S-14	CITY OF E PROVIDENCE
0012	000	2	RIVERSIDE	DR	6100	Overhead	Distribution	Luminaire	LUM HPS RWY 50W	Active	50	90426-19008	S-14	CITY OF E PROVIDENCE
0013	000	2	RIVERSIDE	DR	6100	Overhead	Distribution	Luminaire	LUM HPS RWY 50W	Active	50	90426-19008	S-14	CITY OF E PROVIDENCE
0015	000	2	RIVERSIDE	DR	6100	Overhead	Distribution	Luminaire	LUM HPS RWY 50W	Active	50	90426-19008	S-14	CITY OF E PROVIDENCE
0016	000	2	RIVERSIDE	DR	6100	Overhead	Distribution	Luminaire	LUM HPS RWY 50W TT	Temp Turn Off	50	90426-19008	S-14	CITY OF E PROVIDENCE
0017	000	2	RIVERSIDE	DR	6100	Overhead	Distribution	Luminaire	LUM HPS RWY 50W	Active	50	90426-19008	S-14	CITY OF E PROVIDENCE
0018	000	2	RIVERSIDE	DR	6100	Overhead	Distribution	Luminaire	LUM HPS RWY 50W TT	Temp Turn Off	50	90426-19008	S-14	CITY OF E PROVIDENCE
0019	000	2	RIVERSIDE	DR	6100	Overhead	Distribution	Luminaire	LUM HPS RWY 50W	Active	50	90426-19008	S-14	CITY OF E PROVIDENCE
0021	000	2	RIVERSIDE	DR	6100	Overhead	Distribution	Luminaire	LUM HPS RWY 50W	Active	50	90426-19008	S-14	CITY OF E PROVIDENCE
0022	000	2	RIVERSIDE	DR	6100	Overhead	Distribution	Luminaire	LUM HPS RWY 100W TT	Temp Turn Off	100	90426-19008	S-14	CITY OF E PROVIDENCE
0023	000	2	RIVERSIDE	DR	6100	Overhead	Distribution	Luminaire	LUM HPS RWY 50W	Active	50	90426-19008	S-14	CITY OF E PROVIDENCE
0024	000	2	RIVERSIDE	DR	6100	Overhead	Distribution	Luminaire	LUM HPS RWY 50W TT	Temp Turn Off	50	90426-19008	S-14	CITY OF E PROVIDENCE
0025	000	2	RIVERSIDE	DR	6100	Overhead	Distribution	Luminaire	LUM HPS RWY 50W	Active	50	90426-19008	S-14	CITY OF E PROVIDENCE
0027	000	2	RIVERSIDE	DR	6100	Overhead	Distribution	Luminaire	LUM HPS RWY 50W TT	Temp Turn Off	50	90426-19008	S-14	CITY OF E PROVIDENCE
0001	000	0	RIVERWOODS	CT	3053	Underground	Street Lighting	Pole	POLE FIBER PT <25	Inactive	0	65485-54003	S-14	CITY OF E PROVIDENCE
0001	000	2	RIVERWOODS	CT	3053	Underground	Street Lighting	Luminaire	LUM HPS POST 100W	Inactive	100	65485-54003	S-14	CITY OF E PROVIDENCE

Pole No	Pole Suffix	Light Sequ No	Street Name	Street Suffix	Ngrid Line No	Source Type	Pole Use	Component Type	Bill Print and Tariff Description	Billing Status	Lamp Wattage	Account No	Rate	Customer Name
0002	000	0	RIVERWOODS	CT	3053	Underground	Street Lighting	Pole	POLE FIBER PT <25	Inactive	0	65485-54003	S-14	CITY OF E PROVIDENCE
0002	000	2	RIVERWOODS	CT	3053	Underground	Street Lighting	Luminaire	LUM HPS POST 100W	Inactive	100	65485-54003	S-14	CITY OF E PROVIDENCE
0003	000	0	RIVERWOODS	CT	3053	Underground	Street Lighting	Pole	POLE FIBER PT <25	Inactive	0	65485-54003	S-14	CITY OF E PROVIDENCE
0003	000	2	RIVERWOODS	CT	3053	Underground	Street Lighting	Luminaire	LUM HPS POST 100W	Inactive	100	65485-54003	S-14	CITY OF E PROVIDENCE
0004	000	0	RIVERWOODS	CT	3053	Underground	Street Lighting	Pole	POLE FIBER PT <25	Inactive	0	65485-54003	S-14	CITY OF E PROVIDENCE
0004	000	2	RIVERWOODS	CT	3053	Underground	Street Lighting	Luminaire	LUM HPS POST 100W	Inactive	100	65485-54003	S-14	CITY OF E PROVIDENCE
0002	000	2	ROBIN HOOD	DR	6105	Overhead	Distribution	Luminaire	LUM HPS RWY 50W	Active	50	65485-54003	S-14	CITY OF E PROVIDENCE
0003	000	2	ROBIN HOOD	DR	6105	Overhead	Distribution	Luminaire	LUM HPS RWY 50W TT	Temp Turn Off	50	65485-54003	S-14	CITY OF E PROVIDENCE
0004	000	2	ROBIN HOOD	DR	6105	Overhead	Distribution	Luminaire	LUM HPS RWY 50W	Active	50	65485-54003	S-14	CITY OF E PROVIDENCE
0006	000	2	ROBIN HOOD	DR	6105	Overhead	Distribution	Luminaire	LUM HPS RWY 50W	Active	50	65485-54003	S-14	CITY OF E PROVIDENCE
0007	000	2	ROBIN HOOD	DR	6105	Overhead	Distribution	Luminaire	LUM HPS RWY 50W TT	Temp Turn Off	50	65485-54003	S-14	CITY OF E PROVIDENCE
0008	000	2	ROBIN HOOD	DR	6105	Overhead	Distribution	Luminaire	LUM HPS RWY 50W	Active	50	65485-54003	S-14	CITY OF E PROVIDENCE
0002	000	2	ROBINSON	ST	6110	Overhead	Distribution	Luminaire	LUM HPS RWY 50W	Active	50	65485-54003	S-14	CITY OF E PROVIDENCE
0005	000	2	ROBINSON	ST	6110	Overhead	Distribution	Luminaire	LUM HPS RWY 50W TT	Temp Turn Off	50	65485-54003	S-14	CITY OF E PROVIDENCE
0006	000	2	ROBINSON	ST	6110	Overhead	Distribution	Luminaire	LUM HPS RWY 50W	Active	50	65485-54003	S-14	CITY OF E PROVIDENCE
0008	000	2	ROBINSON	ST	6110	Overhead	Distribution	Luminaire	LUM HPS RWY 50W	Active	50	65485-54003	S-14	CITY OF E PROVIDENCE
0010	000	1	ROBINSON	ST	6110	Overhead	Distribution	Luminaire	LUM HPS RWY 50W	Active	50	65485-54003	S-14	CITY OF E PROVIDENCE
0002	000	2	ROCKWAY	AVE	6115	Overhead	Distribution	Luminaire	LUM HPS RWY 50W	Active	50	65485-54003	S-14	CITY OF E PROVIDENCE
0004	000	1	ROCKWAY	AVE	6115	Overhead	Distribution	Luminaire	LUM HPS RWY 100W	Active	100	65485-54003	S-14	CITY OF E PROVIDENCE
0001	000	1	ROGER WILLIAM	AVE	6120	Overhead	Distribution	Luminaire	LUM HPS RWY 100W	Active	100	90426-19008	S-14	CITY OF E PROVIDENCE
0002	000	1	ROGER WILLIAM	AVE	6120	Overhead	Distribution	Luminaire	LUM HPS RWY 100W	Active	100	90426-19008	S-14	CITY OF E PROVIDENCE
0003	000	1	ROGER WILLIAM	AVE	6120	Overhead	Distribution	Luminaire	LUM HPS RWY 100W	Active	100	90426-19008	S-14	CITY OF E PROVIDENCE
0004	000	1	ROGER WILLIAM	AVE	6120	Overhead	Distribution	Luminaire	LUM HPS RWY 100W	Active	100	90426-19008	S-14	CITY OF E PROVIDENCE
0006	000	1	ROGER WILLIAM	AVE	6120	Overhead	Distribution	Luminaire	LUM HPS RWY 100W	Active	100	90426-19008	S-14	CITY OF E PROVIDENCE
0008	000	1	ROGER WILLIAM	AVE	6120	Overhead	Distribution	Luminaire	LUM HPS RWY 100W	Active	100	90426-19008	S-14	CITY OF E PROVIDENCE
0009	000	1	ROGER WILLIAM	AVE	6120	Overhead	Distribution	Luminaire	LUM HPS RWY 100W	Active	100	90426-19008	S-14	CITY OF E PROVIDENCE
0186	000	2	ROGER WILLIAM	AVE	6120	Overhead	Distribution	Luminaire	LUM HPS RWY 100W	Active	100	65485-54003	S-14	CITY OF E PROVIDENCE
0191	000	2	ROGER WILLIAM	AVE	6120	Overhead	Distribution	Luminaire	LUM HPS RWY 100W	Active	100	65485-54003	S-14	CITY OF E PROVIDENCE
0195	000	2	ROGER WILLIAM	AVE	6120	Overhead	Distribution	Luminaire	LUM HPS RWY 100W	Active	100	65485-54003	S-14	CITY OF E PROVIDENCE
0197	000	2	ROGER WILLIAM	AVE	6120	Overhead	Distribution	Luminaire	LUM HPS RWY 100W	Active	100	65485-54003	S-14	CITY OF E PROVIDENCE
0199	000	2	ROGER WILLIAM	AVE	6120	Overhead	Distribution	Luminaire	LUM HPS RWY 100W	Active	100	65485-54003	S-14	CITY OF E PROVIDENCE
0203	000	2	ROGER WILLIAM	AVE	6120	Overhead	Distribution	Luminaire	LUM HPS RWY 100W	Active	100	65485-54003	S-14	CITY OF E PROVIDENCE
0207	000	2	ROGER WILLIAM	AVE	6120	Overhead	Distribution	Luminaire	LUM HPS RWY 100W	Active	100	65485-54003	S-14	CITY OF E PROVIDENCE
0211	000	1	ROGER WILLIAM	AVE	6120	Overhead	Distribution	Luminaire	LUM HPS RWY 50W	Active	50	65485-54003	S-14	CITY OF E PROVIDENCE
0217	000	1	ROGER WILLIAM	AVE	6120	Overhead	Distribution	Luminaire	LUM HPS RWY 50W	Active	50	65485-54003	S-14	CITY OF E PROVIDENCE
0221	000	1	ROGER WILLIAM	AVE	6120	Overhead	Distribution	Luminaire	LUM HPS RWY 50W	Active	50	65485-54003	S-14	CITY OF E PROVIDENCE
0225	000	1	ROGER WILLIAM	AVE	6120	Overhead	Distribution	Luminaire	LUM HPS RWY 50W	Active	50	65485-54003	S-14	CITY OF E PROVIDENCE
0229	000	1	ROGER WILLIAM	AVE	6120	Overhead	Distribution	Luminaire	LUM HPS RWY 50W	Active	50	65485-54003	S-14	CITY OF E PROVIDENCE
0233	000	1	ROGER WILLIAM	AVE	6120	Overhead	Distribution	Luminaire	LUM HPS RWY 50W	Active	50	65485-54003	S-14	CITY OF E PROVIDENCE
0235	000	1	ROGER WILLIAM	AVE	6120	Overhead	Distribution	Luminaire	LUM HPS RWY 50W	Active	50	65485-54003	S-14	CITY OF E PROVIDENCE
0239	000	1	ROGER WILLIAM	AVE	6120	Overhead	Distribution	Luminaire	LUM HPS RWY 50W	Active	50	65485-54003	S-14	CITY OF E PROVIDENCE
0245	000	1	ROGER WILLIAM	AVE	6120	Overhead	Distribution	Luminaire	LUM HPS RWY 50W	Active	50	65485-54003	S-14	CITY OF E PROVIDENCE
0247	000	1	ROGER WILLIAM	AVE	6120	Overhead	Distribution	Luminaire	LUM HPS RWY 50W	Active	50	65485-54003	S-14	CITY OF E PROVIDENCE
0249	000	1	ROGER WILLIAM	AVE	6120	Overhead	Distribution	Luminaire	LUM HPS RWY 50W	Active	50	65485-54003	S-14	CITY OF E PROVIDENCE
0253	000	1	ROGER WILLIAM	AVE	6120	Overhead	Distribution	Luminaire	LUM HPS RWY 50W	Active	50	65485-54003	S-14	CITY OF E PROVIDENCE
0257	000	1	ROGER WILLIAM	AVE	6120	Overhead	Distribution	Luminaire	LUM HPS RWY 50W	Active	50	65485-54003	S-14	CITY OF E PROVIDENCE
0259	000	1	ROGER WILLIAM	AVE	6120	Overhead	Distribution	Luminaire	LUM HPS RWY 50W	Active	50	65485-54003	S-14	CITY OF E PROVIDENCE
0261	000	1	ROGER WILLIAM	AVE	6120	Overhead	Distribution	Luminaire	LUM HPS RWY 50W	Active	50	65485-54003	S-14	CITY OF E PROVIDENCE
9001	000	1	ROGER WILLIAM	AVE	6120	Overhead	Distribution	Luminaire	LUM HPS RWY 50W	Active	50	65485-54003	S-14	CITY OF E PROVIDENCE
9003	000	1	ROGER WILLIAM	AVE	6120	Overhead	Distribution	Luminaire	LUM HPS RWY 50W	Active	50	65485-54003	S-14	CITY OF E PROVIDENCE
9005	000	1	ROGER WILLIAM	AVE	6120	Overhead	Distribution	Luminaire	LUM HPS RWY 50W	Active	50	65485-54003	S-14	CITY OF E PROVIDENCE
9007	000	1	ROGER WILLIAM	AVE	6120	Overhead	Distribution	Luminaire	LUM HPS RWY 50W	Active	50	65485-54003	S-14	CITY OF E PROVIDENCE
9010	000	1	ROGER WILLIAM	AVE	6120	Overhead	Distribution	Luminaire	LUM HPS RWY 50W	Active	50	65485-54003	S-14	CITY OF E PROVIDENCE
9012	000	1	ROGER WILLIAM	AVE	6120	Overhead	Distribution	Luminaire	LUM HPS RWY 50W	Active	50	65485-54003	S-14	CITY OF E PROVIDENCE
9014	000	1	ROGER WILLIAM	AVE	6120	Overhead	Distribution	Luminaire	LUM HPS RWY 50W	Active	50	65485-54003	S-14	CITY OF E PROVIDENCE

Pole No	Pole Suffix	Light Sequ No	Street Name	Street Suffix	Ngrid Line No	Source Type	Pole Use	Component Type	Bill Print and Tariff Description	Billing Status	Lamp Wattage	Account No	Rate	Customer Name
9016	000	1	ROGER WILLIAM	AVE	6120	Overhead	Distribution	Luminaire	LUM HPS RWY 50W	Active	50	65485-54003	S-14	CITY OF E PROVIDENCE
9018	000	1	ROGER WILLIAM	AVE	6120	Overhead	Distribution	Luminaire	LUM HPS RWY 50W	Active	50	65485-54003	S-14	CITY OF E PROVIDENCE
9021	000	1	ROGER WILLIAM	AVE	6120	Overhead	Distribution	Luminaire	LUM HPS RWY 50W	Active	50	65485-54003	S-14	CITY OF E PROVIDENCE
9023	000	1	ROGER WILLIAM	AVE	6120	Overhead	Distribution	Luminaire	LUM HPS RWY 50W	Active	50	65485-54003	S-14	CITY OF E PROVIDENCE
9025	000	1	ROGER WILLIAM	AVE	6120	Overhead	Distribution	Luminaire	LUM HPS RWY 50W	Active	50	65485-54003	S-14	CITY OF E PROVIDENCE
9027	000	1	ROGER WILLIAM	AVE	6120	Overhead	Distribution	Luminaire	LUM HPS RWY 50W	Active	50	65485-54003	S-14	CITY OF E PROVIDENCE
9028	000	1	ROGER WILLIAM	AVE	6120	Overhead	Distribution	Luminaire	LUM HPS RWY 50W	Active	50	65485-54003	S-14	CITY OF E PROVIDENCE
9031	000	1	ROGER WILLIAM	AVE	6120	Overhead	Distribution	Luminaire	LUM HPS RWY 50W	Active	50	65485-54003	S-14	CITY OF E PROVIDENCE
9033	000	1	ROGER WILLIAM	AVE	6120	Overhead	Distribution	Luminaire	LUM HPS RWY 50W	Active	50	65485-54003	S-14	CITY OF E PROVIDENCE
9035	000	1	ROGER WILLIAM	AVE	6120	Overhead	Distribution	Luminaire	LUM HPS RWY 50W	Active	50	65485-54003	S-14	CITY OF E PROVIDENCE
9038	000	1	ROGER WILLIAM	AVE	6120	Overhead	Distribution	Luminaire	LUM HPS RWY 50W	Active	50	65485-54003	S-14	CITY OF E PROVIDENCE
9040	000	1	ROGER WILLIAM	AVE	6120	Overhead	Distribution	Luminaire	LUM HPS RWY 50W	Active	50	65485-54003	S-14	CITY OF E PROVIDENCE
9042	000	1	ROGER WILLIAM	AVE	6120	Overhead	Distribution	Luminaire	LUM HPS RWY 50W	Active	50	65485-54003	S-14	CITY OF E PROVIDENCE
9044	000	1	ROGER WILLIAM	AVE	6120	Overhead	Distribution	Luminaire	LUM HPS RWY 50W	Active	50	65485-54003	S-14	CITY OF E PROVIDENCE
9046	000	1	ROGER WILLIAM	AVE	6120	Overhead	Distribution	Luminaire	LUM HPS RWY 50W	Active	50	65485-54003	S-14	CITY OF E PROVIDENCE
9048	000	1	ROGER WILLIAM	AVE	6120	Overhead	Distribution	Luminaire	LUM HPS RWY 50W	Active	50	65485-54003	S-14	CITY OF E PROVIDENCE
9050	000	1	ROGER WILLIAM	AVE	6120	Overhead	Distribution	Luminaire	LUM HPS RWY 50W	Active	50	65485-54003	S-14	CITY OF E PROVIDENCE
9052	000	1	ROGER WILLIAM	AVE	6120	Overhead	Distribution	Luminaire	LUM HPS RWY 50W	Active	50	65485-54003	S-14	CITY OF E PROVIDENCE
9054	000	1	ROGER WILLIAM	AVE	6120	Overhead	Distribution	Luminaire	LUM HPS RWY 50W	Active	50	65485-54003	S-14	CITY OF E PROVIDENCE
9056	000	1	ROGER WILLIAM	AVE	6120	Overhead	Distribution	Luminaire	LUM HPS RWY 100W	Active	100	65485-54003	S-14	CITY OF E PROVIDENCE
0005	000	2	ROGERS	ST	6125	Overhead	Distribution	Luminaire	LUM HPS RWY 50W	Active	50	65485-54003	S-14	CITY OF E PROVIDENCE
0007	000	2	ROGERS	ST	6125	Overhead	Distribution	Luminaire	LUM HPS RWY 50W	Active	50	65485-54003	S-14	CITY OF E PROVIDENCE
0009	000	2	ROGERS	ST	6125	Overhead	Distribution	Luminaire	LUM HPS RWY 50W	Active	50	65485-54003	S-14	CITY OF E PROVIDENCE
0011	000	2	ROGERS	ST	6125	Overhead	Distribution	Luminaire	LUM HPS RWY 50W	Active	50	65485-54003	S-14	CITY OF E PROVIDENCE
0001	000	2	ROLAND	ST	6130	Overhead	Distribution	Luminaire	LUM HPS RWY 50W	Active	50	65485-54003	S-14	CITY OF E PROVIDENCE
0001	000	2	ROMA	ST	6140	Overhead	Distribution	Luminaire	LUM HPS RWY 50W TT	Temp Turn Off	50	65485-54003	S-14	CITY OF E PROVIDENCE
0002	000	2	ROMA	ST	6140	Overhead	Distribution	Luminaire	LUM HPS RWY 50W	Active	50	65485-54003	S-14	CITY OF E PROVIDENCE
0004	000	2	ROMA	ST	6140	Overhead	Distribution	Luminaire	LUM HPS RWY 50W	Active	50	65485-54003	S-14	CITY OF E PROVIDENCE
0006	000	2	ROMA	ST	6140	Overhead	Distribution	Luminaire	LUM HPS RWY 50W	Active	50	65485-54003	S-14	CITY OF E PROVIDENCE
0007	000	1	ROMA	ST	6140	Overhead	Distribution	Luminaire	LUM HPS RWY 50W	Active	50	65485-54003	S-14	CITY OF E PROVIDENCE
0008	000	2	ROMA	ST	6140	Overhead	Distribution	Luminaire	LUM HPS RWY 50W TT	Temp Turn Off	50	65485-54003	S-14	CITY OF E PROVIDENCE
0009	000	2	ROMA	ST	6140	Overhead	Distribution	Luminaire	LUM HPS RWY 50W	Active	50	65485-54003	S-14	CITY OF E PROVIDENCE
0010	000	2	ROMA	ST	6140	Overhead	Distribution	Luminaire	LUM HPS RWY 50W TT	Temp Turn Off	50	65485-54003	S-14	CITY OF E PROVIDENCE
0015	000	2	ROMA	ST	6140	Overhead	Distribution	Luminaire	LUM HPS RWY 50W	Active	50	65485-54003	S-14	CITY OF E PROVIDENCE
0016	000	2	ROMA	ST	6140	Overhead	Distribution	Luminaire	LUM HPS RWY 50W	Active	50	65485-54003	S-14	CITY OF E PROVIDENCE
0002	000	2	ROSANNA	ST	6145	Overhead	Distribution	Luminaire	LUM HPS RWY 50W	Active	50	65485-54003	S-14	CITY OF E PROVIDENCE
0002	000	2	ROSELAND	CT	6155	Overhead	Distribution	Luminaire	LUM HPS RWY 50W	Active	50	65485-54003	S-14	CITY OF E PROVIDENCE
0001	000	2	ROSEMERE	DR	6160	Overhead	Distribution	Luminaire	LUM HPS RWY 50W	Active	50	65485-54003	S-14	CITY OF E PROVIDENCE
0002	000	2	ROSEMERE	DR	6160	Overhead	Distribution	Luminaire	LUM HPS RWY 50W	Active	50	65485-54003	S-14	CITY OF E PROVIDENCE
0003	000	2	ROSEMERE	DR	6160	Overhead	Distribution	Luminaire	LUM HPS RWY 50W	Active	50	65485-54003	S-14	CITY OF E PROVIDENCE
0005	000	2	ROSEMERE	DR	6160	Overhead	Distribution	Luminaire	LUM HPS RWY 50W	Active	50	65485-54003	S-14	CITY OF E PROVIDENCE
0006	000	2	ROSEMERE	DR	6160	Overhead	Distribution	Luminaire	LUM HPS RWY 50W TT	Temp Turn Off	50	65485-54003	S-14	CITY OF E PROVIDENCE
0007	000	2	ROSEMERE	DR	6160	Overhead	Distribution	Luminaire	LUM HPS RWY 50W	Active	50	65485-54003	S-14	CITY OF E PROVIDENCE
0002	000	2	ROSLYN	AVE	6165	Overhead	Distribution	Luminaire	LUM HPS RWY 50W	Active	50	90426-19008	S-14	CITY OF E PROVIDENCE
0003	000	2	ROSLYN	AVE	6165	Overhead	Distribution	Luminaire	LUM HPS RWY 50W TT	Temp Turn Off	50	90426-19008	S-14	CITY OF E PROVIDENCE
0033	000	2	ROSLYN	AVE	6165	Overhead	Distribution	Luminaire	LUM HPS RWY 50W	Active	50	90426-19008	S-14	CITY OF E PROVIDENCE
9034	000	2	ROSLYN	AVE	6165	Overhead	Distribution	Luminaire	LUM HPS RWY 50W	Active	50	65485-54003	S-14	CITY OF E PROVIDENCE
0002	000	1	ROUNDS	AVE	6170	Overhead	Distribution	Luminaire	LUM HPS RWY 50W	Active	50	65485-54003	S-14	CITY OF E PROVIDENCE
0004	000	2	ROUNDS	AVE	6170	Overhead	Distribution	Luminaire	LUM HPS RWY 50W	Active	50	65485-54003	S-14	CITY OF E PROVIDENCE
0006	000	2	ROUNDS	AVE	6170	Overhead	Distribution	Luminaire	LUM HPS RWY 50W	Active	50	65485-54003	S-14	CITY OF E PROVIDENCE
0008	000	2	ROUNDS	AVE	6170	Overhead	Distribution	Luminaire	LUM HPS RWY 50W	Active	50	65485-54003	S-14	CITY OF E PROVIDENCE
0010	000	2	ROUNDS	AVE	6170	Overhead	Distribution	Luminaire	LUM HPS RWY 50W	Active	50	65485-54003	S-14	CITY OF E PROVIDENCE
0012	000	2	ROUNDS	AVE	6170	Overhead	Distribution	Luminaire	LUM HPS RWY 50W	Active	50	65485-54003	S-14	CITY OF E PROVIDENCE
0014	000	2	ROUNDS	AVE	6170	Overhead	Distribution	Luminaire	LUM HPS RWY 50W	Active	50	65485-54003	S-14	CITY OF E PROVIDENCE
0015	000	2	ROUNDS	AVE	6170	Overhead	Distribution	Luminaire	LUM HPS RWY 50W TT	Temp Turn Off	50	65485-54003	S-14	CITY OF E PROVIDENCE

Pole No	Pole Suffix	Light Sequ No	Street Name	Street Suffix	Ngrid Line No	Source Type	Pole Use	Component Type	Bill Print and Tariff Description	Billing Status	Lamp Wattage	Account No	Rate	Customer Name
0017	000	2	ROUNDS	AVE	6170	Overhead	Distribution	Luminaire	LUM HPS RWY 50W	Active	50	65485-54003	S-14	CITY OF E PROVIDENCE
0019	000	2	ROUNDS	AVE	6170	Overhead	Distribution	Luminaire	LUM HPS RWY 50W TT	Temp Turn Off	50	65485-54003	S-14	CITY OF E PROVIDENCE
0020	000	2	ROUNDS	AVE	6170	Overhead	Distribution	Luminaire	LUM HPS RWY 50W	Active	50	65485-54003	S-14	CITY OF E PROVIDENCE
0021	000	2	ROUNDS	AVE	6170	Overhead	Distribution	Luminaire	LUM HPS RWY 50W TT	Temp Turn Off	50	65485-54003	S-14	CITY OF E PROVIDENCE
0022	000	2	ROUNDS	AVE	6170	Overhead	Distribution	Luminaire	LUM HPS RWY 50W	Active	50	65485-54003	S-14	CITY OF E PROVIDENCE
0024	000	2	ROUNDS	AVE	6170	Overhead	Distribution	Luminaire	LUM HPS RWY 50W TT	Temp Turn Off	50	65485-54003	S-14	CITY OF E PROVIDENCE
0001	000	2	ROWENA	DR	6175	Overhead	Distribution	Luminaire	LUM HPS RWY 50W	Active	50	65485-54003	S-14	CITY OF E PROVIDENCE
0002	000	2	ROWENA	DR	6175	Overhead	Distribution	Luminaire	LUM HPS RWY 50W	Active	50	65485-54003	S-14	CITY OF E PROVIDENCE
0001	000	2	ROWLEY	ST	6180	Overhead	Distribution	Luminaire	LUM HPS RWY 50W	Active	50	65485-54003	S-14	CITY OF E PROVIDENCE
0002	000	2	ROWLEY	ST	6180	Overhead	Distribution	Luminaire	LUM HPS RWY 50W TT	Temp Turn Off	50	65485-54003	S-14	CITY OF E PROVIDENCE
0003	000	2	ROWLEY	ST	6180	Overhead	Distribution	Luminaire	LUM HPS RWY 50W	Active	50	65485-54003	S-14	CITY OF E PROVIDENCE
0004	000	2	ROWLEY	ST	6180	Overhead	Distribution	Luminaire	LUM HPS RWY 50W	Active	50	65485-54003	S-14	CITY OF E PROVIDENCE
0005	000	2	ROWLEY	ST	6180	Overhead	Distribution	Luminaire	LUM HPS RWY 50W	Active	50	65485-54003	S-14	CITY OF E PROVIDENCE
0001	000	2	ROYAL	AVE	6185	Overhead	Distribution	Luminaire	LUM HPS RWY 50W	Active	50	90426-19008	S-14	CITY OF E PROVIDENCE
0002	000	2	RUSSELL	AVE	6190	Overhead	Distribution	Luminaire	LUM HPS RWY 50W	Active	50	65485-54003	S-14	CITY OF E PROVIDENCE
0004	000	2	RUSSELL	AVE	6190	Overhead	Distribution	Luminaire	LUM HPS RWY 50W	Active	50	65485-54003	S-14	CITY OF E PROVIDENCE
0005	000	2	RUSSELL	AVE	6190	Overhead	Distribution	Luminaire	LUM HPS RWY 50W TT	Temp Turn Off	50	65485-54003	S-14	CITY OF E PROVIDENCE
0006	000	2	RUSSELL	AVE	6190	Overhead	Distribution	Luminaire	LUM HPS RWY 50W	Active	50	65485-54003	S-14	CITY OF E PROVIDENCE
0007	000	2	RUSSELL	AVE	6190	Overhead	Distribution	Luminaire	LUM HPS RWY 50W TT	Temp Turn Off	50	65485-54003	S-14	CITY OF E PROVIDENCE
0008	000	2	RUSSELL	AVE	6190	Overhead	Distribution	Luminaire	LUM HPS RWY 50W	Active	50	65485-54003	S-14	CITY OF E PROVIDENCE
0010	000	2	RUSSELL	AVE	6190	Overhead	Distribution	Luminaire	LUM HPS RWY 50W TT	Temp Turn Off	50	65485-54003	S-14	CITY OF E PROVIDENCE
0011	000	2	RUSSELL	AVE	6190	Overhead	Distribution	Luminaire	LUM HPS RWY 50W TT	Temp Turn Off	50	65485-54003	S-14	CITY OF E PROVIDENCE
0012	000	2	RUSSELL	AVE	6190	Overhead	Distribution	Luminaire	LUM HPS RWY 50W	Active	50	65485-54003	S-14	CITY OF E PROVIDENCE
0013	000	2	RUSSELL	AVE	6190	Overhead	Distribution	Luminaire	LUM HPS RWY 50W	Active	50	65485-54003	S-14	CITY OF E PROVIDENCE
0002	000	2	RUTH	AVE	6195	Overhead	Distribution	Luminaire	LUM HPS RWY 50W	Active	50	65485-54003	S-14	CITY OF E PROVIDENCE
0003	000	2	RUTH	AVE	6195	Overhead	Distribution	Luminaire	LUM HPS RWY 50W TT	Temp Turn Off	50	65485-54003	S-14	CITY OF E PROVIDENCE
0004	000	2	RUTH	AVE	6195	Overhead	Distribution	Luminaire	LUM HPS RWY 50W	Active	50	65485-54003	S-14	CITY OF E PROVIDENCE
0006	000	2	RUTH	AVE	6195	Overhead	Distribution	Luminaire	LUM HPS RWY 50W	Active	50	65485-54003	S-14	CITY OF E PROVIDENCE
0008	000	2	RUTH	AVE	6195	Overhead	Distribution	Luminaire	LUM HPS RWY 50W	Active	50	65485-54003	S-14	CITY OF E PROVIDENCE
0010	000	2	RUTH	AVE	6195	Overhead	Distribution	Luminaire	LUM HPS RWY 50W	Active	50	65485-54003	S-14	CITY OF E PROVIDENCE
0012	000	2	RUTH	AVE	6195	Overhead	Distribution	Luminaire	LUM HPS RWY 50W	Active	50	65485-54003	S-14	CITY OF E PROVIDENCE
0013	000	2	RUTH	AVE	6195	Overhead	Distribution	Luminaire	LUM HPS RWY 50W	Active	50	65485-54003	S-14	CITY OF E PROVIDENCE
0014	000	2	RUTH	AVE	6195	Overhead	Distribution	Luminaire	LUM HPS RWY 50W	Active	50	65485-54003	S-14	CITY OF E PROVIDENCE
0016	000	2	RUTH	AVE	6195	Overhead	Distribution	Luminaire	LUM HPS RWY 50W	Active	50	65485-54003	S-14	CITY OF E PROVIDENCE
0002	000	2	RUTLAND	ST	6200	Overhead	Distribution	Luminaire	LUM HPS RWY 50W	Active	50	65485-54003	S-14	CITY OF E PROVIDENCE
0004	000	2	RUTLAND	ST	6200	Overhead	Distribution	Luminaire	LUM HPS RWY 50W	Active	50	90426-19008	S-14	CITY OF E PROVIDENCE
0001	000	0	S VILLAGE GREEN	ST	6633	Underground	Street Lighting	Pole	POLE METAL =>25FT	Inactive	0	65485-54003	S-14	CITY OF E PROVIDENCE
0001	000	1	S VILLAGE GREEN	ST	6633	Underground	Street Lighting	Luminaire	LUM HPS RWY 50W	Active	50	65485-54003	S-14	CITY OF E PROVIDENCE
0002	000	0	S VILLAGE GREEN	ST	6633	Underground	Street Lighting	Pole	POLE METAL W/BASE	Active	0	65485-54003	S-14	CITY OF E PROVIDENCE
0002	000	1	S VILLAGE GREEN	ST	6633	Underground	Street Lighting	Luminaire	LUM HPS RWY 50W	Active	50	65485-54003	S-14	CITY OF E PROVIDENCE
0003	000	0	S VILLAGE GREEN	ST	6633	Underground	Street Lighting	Pole	POLE METAL W/BASE	Active	0	65485-54003	S-14	CITY OF E PROVIDENCE
0003	000	1	S VILLAGE GREEN	ST	6633	Underground	Street Lighting	Luminaire	LUM HPS RWY 50W	Active	50	65485-54003	S-14	CITY OF E PROVIDENCE
0004	000	0	S VILLAGE GREEN	ST	6633	Underground	Street Lighting	Pole	POLE METAL W/BASE	Active	0	65485-54003	S-14	CITY OF E PROVIDENCE
0004	000	1	S VILLAGE GREEN	ST	6633	Underground	Street Lighting	Luminaire	LUM HPS RWY 50W	Active	50	65485-54003	S-14	CITY OF E PROVIDENCE
0005	000	0	S VILLAGE GREEN	ST	6633	Underground	Street Lighting	Pole	POLE METAL W/BASE	Active	0	65485-54003	S-14	CITY OF E PROVIDENCE
0005	000	1	S VILLAGE GREEN	ST	6633	Underground	Street Lighting	Luminaire	LUM HPS RWY 50W	Active	50	65485-54003	S-14	CITY OF E PROVIDENCE
0006	000	0	S VILLAGE GREEN	ST	6633	Underground	Street Lighting	Pole	POLE METAL W/BASE	Active	0	65485-54003	S-14	CITY OF E PROVIDENCE
0006	000	2	S VILLAGE GREEN	ST	6633	Underground	Street Lighting	Luminaire	LUM HPS RWY 50W	Active	50	65485-54003	S-14	CITY OF E PROVIDENCE
0007	000	0	S VILLAGE GREEN	ST	6633	Underground	Street Lighting	Pole	POLE METAL W/BASE	Active	0	65485-54003	S-14	CITY OF E PROVIDENCE
0007	000	2	S VILLAGE GREEN	ST	6633	Underground	Street Lighting	Luminaire	LUM HPS RWY 100W	Active	100	65485-54003	S-14	CITY OF E PROVIDENCE
0008	000	0	S VILLAGE GREEN	ST	6633	Underground	Street Lighting	Pole	POLE METAL =>25FT	Active	0	90426-19008	S-14	CITY OF E PROVIDENCE
0008	000	2	S VILLAGE GREEN	ST	6633	Underground	Street Lighting	Luminaire	LUM HPS RWY 250W	Active	250	90426-19008	S-14	CITY OF E PROVIDENCE
0009	000	0	S VILLAGE GREEN	ST	6633	Underground	Street Lighting	Pole	POLE METAL =>25FT	Inactive	0	65485-54003	S-14	CITY OF E PROVIDENCE
0009	000	1	S VILLAGE GREEN	ST	6633	Underground	Street Lighting	Luminaire	LUM HPS RWY 100W	Inactive	100	65485-54003	S-14	CITY OF E PROVIDENCE
0010	000	0	S VILLAGE GREEN	ST	6633	Underground	Street Lighting	Pole	POLE METAL =>25FT	Inactive	0	65485-54003	S-14	CITY OF E PROVIDENCE

Pole No	Pole Suffix	Light Sequ No	Street Name	Street Suffix	Ngrid Line No	Source Type	Pole Use	Component Type	Bill Print and Tariff Description	Billing Status	Lamp Wattage	Account No	Rate	Customer Name
0010	000	1	S VILLAGE GREEN	ST	6633	Underground	Street Lighting	Luminaire	LUM HPS RWY 250W	Inactive	250	65485-54003	S-14	CITY OF E PROVIDENCE
0011	000	0	S VILLAGE GREEN	ST	6633	Underground	Street Lighting	Pole	POLE METAL =>25FT	Inactive	0	65485-54003	S-14	CITY OF E PROVIDENCE
0011	000	1	S VILLAGE GREEN	ST	6633	Underground	Street Lighting	Luminaire	LUM HPS RWY 250W	Inactive	250	65485-54003	S-14	CITY OF E PROVIDENCE
0012	000	0	S VILLAGE GREEN	ST	6633	Underground	Street Lighting	Pole	POLE METAL =>25FT	Inactive	0	65485-54003	S-14	CITY OF E PROVIDENCE
0012	000	1	S VILLAGE GREEN	ST	6633	Underground	Street Lighting	Luminaire	LUM HPS RWY 100W	Inactive	100	65485-54003	S-14	CITY OF E PROVIDENCE
0001	000	2	SABIN	ST	6205	Overhead	Distribution	Luminaire	LUM HPS RWY 50W	Active	50	65485-54003	S-14	CITY OF E PROVIDENCE
0001	000	2	SACHEM	RD	6210	Overhead	Distribution	Luminaire	LUM HPS RWY 50W	Active	50	65485-54003	S-14	CITY OF E PROVIDENCE
0004	000	2	SACHEM	RD	6210	Overhead	Distribution	Luminaire	LUM HPS RWY 50W	Active	50	65485-54003	S-14	CITY OF E PROVIDENCE
0009	000	2	SACHEM	RD	6210	Overhead	Distribution	Luminaire	LUM HPS RWY 50W	Active	50	65485-54003	S-14	CITY OF E PROVIDENCE
0011	000	2	SACHEM	RD	6210	Overhead	Distribution	Luminaire	LUM HPS RWY 50W	Active	50	65485-54003	S-14	CITY OF E PROVIDENCE
0012	000	2	SACHEM	RD	6210	Overhead	Distribution	Luminaire	LUM HPS RWY 50W	Active	50	65485-54003	S-14	CITY OF E PROVIDENCE
0001	000	2	SAINT MICHAEL	CT	6215	Overhead	Distribution	Luminaire	LUM HPS RWY 100W TT	Temp Turn Off	100	65485-54003	S-14	CITY OF E PROVIDENCE
0002	000	2	SAINT MICHAEL	CT	6215	Overhead	Distribution	Luminaire	LUM HPS RWY 100W	Active	100	65485-54003	S-14	CITY OF E PROVIDENCE
0003	000	2	SAINT MICHAEL	CT	6215	Overhead	Distribution	Luminaire	LUM HPS RWY 100W	Active	100	65485-54003	S-14	CITY OF E PROVIDENCE
0004	000	2	SAINT MICHAEL	CT	6215	Overhead	Distribution	Luminaire	LUM HPS RWY 100W	Active	100	65485-54003	S-14	CITY OF E PROVIDENCE
0005	000	2	SAINT MICHAEL	CT	6215	Overhead	Distribution	Luminaire	LUM HPS RWY 100W	Active	100	65485-54003	S-14	CITY OF E PROVIDENCE
0001	000	2	SANDRA	CT	6220	Overhead	Distribution	Luminaire	LUM HPS RWY 50W	Active	50	65485-54003	S-14	CITY OF E PROVIDENCE
0003	000	2	SANDRA	CT	6220	Overhead	Distribution	Luminaire	LUM HPS RWY 50W	Active	50	65485-54003	S-14	CITY OF E PROVIDENCE
0004	000	2	SANFORD	ST	6225	Overhead	Distribution	Luminaire	LUM HPS RWY 50W	Active	50	65485-54003	S-14	CITY OF E PROVIDENCE
0005	000	2	SANFORD	ST	6225	Overhead	Distribution	Luminaire	LUM HPS RWY 50W TT	Temp Turn Off	50	65485-54003	S-14	CITY OF E PROVIDENCE
0007	000	2	SANFORD	ST	6225	Overhead	Distribution	Luminaire	LUM HPS RWY 50W	Active	50	65485-54003	S-14	CITY OF E PROVIDENCE
0009	000	2	SCHOOL	ST	6230	Overhead	Distribution	Luminaire	LUM HPS RWY 50W	Active	50	65485-54003	S-14	CITY OF E PROVIDENCE
0011	000	2	SCHOOL	ST	6230	Overhead	Distribution	Luminaire	LUM HPS RWY 50W	Active	50	65485-54003	S-14	CITY OF E PROVIDENCE
0012	000	2	SCHOOL	ST	6230	Overhead	Distribution	Luminaire	LUM HPS RWY 50W	Active	50	65485-54003	S-14	CITY OF E PROVIDENCE
0016	000	2	SCHOOL	ST	6230	Overhead	Distribution	Luminaire	LUM HPS RWY 50W	Active	50	65485-54003	S-14	CITY OF E PROVIDENCE
0017	000	2	SCHOOL	ST	6230	Overhead	Distribution	Luminaire	LUM HPS RWY 50W	Active	50	65485-54003	S-14	CITY OF E PROVIDENCE
0001	000	2	SCHUYLER	ST	6235	Overhead	Distribution	Luminaire	LUM HPS RWY 50W TT	Temp Turn Off	50	65485-54003	S-14	CITY OF E PROVIDENCE
0004	000	2	SCHUYLER	ST	6235	Overhead	Distribution	Luminaire	LUM HPS RWY 50W	Active	50	65485-54003	S-14	CITY OF E PROVIDENCE
0005	000	2	SCHUYLER	ST	6235	Overhead	Distribution	Luminaire	LUM HPS RWY 50W TT	Temp Turn Off	50	65485-54003	S-14	CITY OF E PROVIDENCE
0006	000	2	SCHUYLER	ST	6235	Overhead	Distribution	Luminaire	LUM HPS RWY 50W	Active	50	65485-54003	S-14	CITY OF E PROVIDENCE
0007	000	1	SCHUYLER	ST	6235	Overhead	Distribution	Luminaire	LUM HPS RWY 50W	Active	50	65485-54003	S-14	CITY OF E PROVIDENCE
0002	000	2	SCOTT	DR	6236	Overhead	Distribution	Luminaire	LUM HPS RWY 50W	Active	50	65485-54003	S-14	CITY OF E PROVIDENCE
0004	000	2	SCOTT	DR	6236	Overhead	Distribution	Luminaire	LUM HPS RWY 50W	Active	50	65485-54003	S-14	CITY OF E PROVIDENCE
0006	000	2	SCOTT	DR	6236	Overhead	Distribution	Luminaire	LUM HPS RWY 50W	Active	50	65485-54003	S-14	CITY OF E PROVIDENCE
0008	000	2	SCOTT	DR	6236	Overhead	Distribution	Luminaire	LUM HPS RWY 50W	Active	50	65485-54003	S-14	CITY OF E PROVIDENCE
0010	000	2	SCOTT	DR	6236	Overhead	Distribution	Luminaire	LUM HPS RWY 50W	Active	50	65485-54003	S-14	CITY OF E PROVIDENCE
0126	000	2	SEA VIEW	AVE	6240	Overhead	Distribution	Luminaire	LUM HPS RWY 50W	Active	50	90426-19008	S-14	CITY OF E PROVIDENCE
0128	000	2	SEA VIEW	AVE	6240	Overhead	Distribution	Luminaire	LUM HPS RWY 50W	Active	50	90426-19008	S-14	CITY OF E PROVIDENCE
0130	000	2	SEA VIEW	AVE	6240	Overhead	Distribution	Luminaire	LUM HPS RWY 50W	Active	50	90426-19008	S-14	CITY OF E PROVIDENCE
0001	000	2	SEABROOK	DR	6237	Overhead	Distribution	Luminaire	LUM HPS RWY 50W	Active	50	65485-54003	S-14	CITY OF E PROVIDENCE
0002	000	2	SEABROOK	DR	6237	Overhead	Distribution	Luminaire	LUM HPS RWY 50W	Active	50	65485-54003	S-14	CITY OF E PROVIDENCE
0004	000	2	SEABROOK	DR	6237	Overhead	Distribution	Luminaire	LUM HPS RWY 50W	Active	50	65485-54003	S-14	CITY OF E PROVIDENCE
0006	000	2	SEABROOK	DR	6237	Overhead	Distribution	Luminaire	LUM HPS RWY 50W	Active	50	65485-54003	S-14	CITY OF E PROVIDENCE
0001	000	2	SECOND	ST	6245	Overhead	Distribution	Luminaire	LUM HPS RWY 50W	Active	50	65485-54003	S-14	CITY OF E PROVIDENCE
0003	000	2	SECOND	ST	6245	Overhead	Distribution	Luminaire	LUM HPS RWY 50W	Active	50	65485-54003	S-14	CITY OF E PROVIDENCE
0006	000	1	SECOND	ST	6245	Overhead	Distribution	Luminaire	LUM HPS RWY 100W	Active	100	65485-54003	S-14	CITY OF E PROVIDENCE
0007	000	2	SECOND	ST	6245	Overhead	Distribution	Luminaire	LUM HPS RWY 50W TT	Temp Turn Off	50	65485-54003	S-14	CITY OF E PROVIDENCE
0008	000	2	SECOND	ST	6245	Overhead	Distribution	Luminaire	LUM HPS RWY 50W	Active	50	65485-54003	S-14	CITY OF E PROVIDENCE
0009	000	2	SECOND	ST	6245	Overhead	Distribution	Luminaire	LUM HPS RWY 50W TT	Temp Turn Off	50	65485-54003	S-14	CITY OF E PROVIDENCE
0011	000	2	SECOND	ST	6245	Overhead	Distribution	Luminaire	LUM HPS RWY 50W	Active	50	65485-54003	S-14	CITY OF E PROVIDENCE
0014	000	2	SECOND	ST	6245	Overhead	Distribution	Luminaire	LUM HPS RWY 50W	Active	50	65485-54003	S-14	CITY OF E PROVIDENCE
0016	000	2	SECOND	ST	6245	Overhead	Distribution	Luminaire	LUM HPS RWY 50W TT	Temp Turn Off	50	65485-54003	S-14	CITY OF E PROVIDENCE
0017	000	2	SECOND	ST	6245	Overhead	Distribution	Luminaire	LUM HPS RWY 50W	Active	50	65485-54003	S-14	CITY OF E PROVIDENCE
0018	000	2	SECOND	ST	6245	Overhead	Distribution	Luminaire	LUM HPS RWY 50W TT	Temp Turn Off	50	65485-54003	S-14	CITY OF E PROVIDENCE
0019	000	2	SECOND	ST	6245	Overhead	Distribution	Luminaire	LUM HPS RWY 50W	Active	50	65485-54003	S-14	CITY OF E PROVIDENCE

Pole No	Pole Suffix	Light Sequ No	Street Name	Street Suffix	Ngrid Line No	Source Type	Pole Use	Component Type	Bill Print and Tariff Description	Billing Status	Lamp Wattage	Account No	Rate	Customer Name
0021	000	2	SECOND	ST	6245	Overhead	Distribution	Luminaire	LUM HPS RWY 50W	Active	50	65485-54003	S-14	CITY OF E PROVIDENCE
0001	000	2	SETH	ST	6260	Overhead	Distribution	Luminaire	LUM HPS RWY 50W TT	Temp Turn Off	50	65485-54003	S-14	CITY OF E PROVIDENCE
0002	000	2	SEVENTH	ST	6265	Overhead	Distribution	Luminaire	LUM HPS RWY 50W	Active	50	65485-54003	S-14	CITY OF E PROVIDENCE
0004	000	2	SEVENTH	ST	6265	Overhead	Distribution	Luminaire	LUM HPS RWY 50W	Active	50	65485-54003	S-14	CITY OF E PROVIDENCE
0007	000	2	SEVENTH	ST	6265	Overhead	Distribution	Luminaire	LUM HPS RWY 50W	Active	50	65485-54003	S-14	CITY OF E PROVIDENCE
0009	000	2	SEVENTH	ST	6265	Overhead	Distribution	Luminaire	LUM HPS RWY 50W	Active	50	65485-54003	S-14	CITY OF E PROVIDENCE
0011	000	2	SEVENTH	ST	6265	Overhead	Distribution	Luminaire	LUM HPS RWY 50W	Active	50	65485-54003	S-14	CITY OF E PROVIDENCE
0013	000	2	SEVENTH	ST	6265	Overhead	Distribution	Luminaire	LUM HPS RWY 50W	Active	50	65485-54003	S-14	CITY OF E PROVIDENCE
0001	000	2	SHADY	LN	6270	Overhead	Distribution	Luminaire	LUM HPS RWY 50W TT	Temp Turn Off	50	65485-54003	S-14	CITY OF E PROVIDENCE
0002	000	2	SHADY	LN	6270	Overhead	Distribution	Luminaire	LUM HPS RWY 50W	Active	50	65485-54003	S-14	CITY OF E PROVIDENCE
0003	000	2	SHADY	LN	6270	Overhead	Distribution	Luminaire	LUM HPS RWY 50W	Active	50	65485-54003	S-14	CITY OF E PROVIDENCE
0003	000	2	SHERIDAN	AVE	6290	Overhead	Distribution	Luminaire	LUM HPS RWY 50W	Active	50	65485-54003	S-14	CITY OF E PROVIDENCE
0005	000	2	SHERIDAN	AVE	6290	Overhead	Distribution	Luminaire	LUM HPS RWY 50W	Active	50	65485-54003	S-14	CITY OF E PROVIDENCE
0001	000	2	SHERMAN	ST	6295	Overhead	Distribution	Luminaire	LUM HPS RWY 50W	Active	50	65485-54003	S-14	CITY OF E PROVIDENCE
0002	000	2	SHERMAN	ST	6295	Overhead	Distribution	Luminaire	LUM HPS RWY 50W	Active	50	65485-54003	S-14	CITY OF E PROVIDENCE
0005	000	2	SHERMAN	ST	6295	Overhead	Distribution	Luminaire	LUM HPS RWY 50W	Active	50	65485-54003	S-14	CITY OF E PROVIDENCE
0007	000	2	SHERMAN	ST	6295	Overhead	Distribution	Luminaire	LUM HPS RWY 50W	Active	50	65485-54003	S-14	CITY OF E PROVIDENCE
0009	000	2	SHERMAN	ST	6295	Overhead	Distribution	Luminaire	LUM HPS RWY 50W	Active	50	65485-54003	S-14	CITY OF E PROVIDENCE
0013	000	2	SHERMAN	ST	6295	Overhead	Distribution	Luminaire	LUM HPS RWY 50W	Active	50	65485-54003	S-14	CITY OF E PROVIDENCE
0015	000	2	SHERMAN	ST	6295	Overhead	Distribution	Luminaire	LUM HPS RWY 50W	Active	50	65485-54003	S-14	CITY OF E PROVIDENCE
0002	000	1	SHORE	RD	6300	Overhead	Distribution	Luminaire	LUM HPS RWY 50W	Active	50	65485-54003	S-14	CITY OF E PROVIDENCE
0004	000	2	SHORE	RD	6300	Overhead	Distribution	Luminaire	LUM HPS RWY 50W	Active	50	65485-54003	S-14	CITY OF E PROVIDENCE
0005	000	2	SHORE	RD	6300	Overhead	Distribution	Luminaire	LUM HPS RWY 50W	Active	50	65485-54003	S-14	CITY OF E PROVIDENCE
0005	050	2	SHORE	RD	6300	Overhead	Distribution	Luminaire	LUM HPS RWY 50W TT	Temp Turn Off	50	65485-54003	S-14	CITY OF E PROVIDENCE
0007	000	2	SHORE	RD	6300	Overhead	Distribution	Luminaire	LUM HPS RWY 50W TT	Temp Turn Off	50	65485-54003	S-14	CITY OF E PROVIDENCE
0009	000	2	SHORE	RD	6300	Overhead	Distribution	Luminaire	LUM HPS RWY 50W	Active	50	65485-54003	S-14	CITY OF E PROVIDENCE
0011	000	2	SHORE	RD	6300	Overhead	Distribution	Luminaire	LUM HPS RWY 50W	Active	50	65485-54003	S-14	CITY OF E PROVIDENCE
0012	000	2	SHORE	RD	6300	Overhead	Distribution	Luminaire	LUM HPS RWY 50W TT	Temp Turn Off	50	65485-54003	S-14	CITY OF E PROVIDENCE
0013	000	2	SHORE	RD	6300	Overhead	Distribution	Luminaire	LUM HPS RWY 50W TT	Temp Turn Off	50	65485-54003	S-14	CITY OF E PROVIDENCE
0014	000	2	SHORE	RD	6300	Overhead	Distribution	Luminaire	LUM HPS RWY 50W TT	Temp Turn Off	50	90426-19008	S-14	CITY OF E PROVIDENCE
0015	000	2	SHORE	RD	6300	Overhead	Distribution	Luminaire	LUM HPS RWY 50W	Active	50	65485-54003	S-14	CITY OF E PROVIDENCE
0017	000	2	SHORE	RD	6300	Overhead	Distribution	Luminaire	LUM HPS RWY 50W	Active	50	65485-54003	S-14	CITY OF E PROVIDENCE
0018	000	1	SHORE	RD	6300	Overhead	Distribution	Luminaire	LUM HPS RWY 50W	Active	50	65485-54003	S-14	CITY OF E PROVIDENCE
0018	001	1	SHORE	RD	6300	Overhead	Distribution	Luminaire	LUM HPS RWY 50W	Active	50	65485-54003	S-14	CITY OF E PROVIDENCE
0019	000	1	SHORE	RD	6300	Overhead	Distribution	Luminaire	LUM HPS RWY 50W	Active	50	65485-54003	S-14	CITY OF E PROVIDENCE
0020	000	1	SHORE	RD	6300	Overhead	Distribution	Luminaire	LUM HPS RWY 50W	Active	50	65485-54003	S-14	CITY OF E PROVIDENCE
0020	001	1	SHORE	RD	6300	Overhead	Distribution	Luminaire	LUM HPS RWY 50W	Active	50	65485-54003	S-14	CITY OF E PROVIDENCE
0020	002	2	SHORE	RD	6300	Overhead	Distribution	Luminaire	LUM HPS FLD 400W	Active	400	65485-54003	S-14	CITY OF E PROVIDENCE
0001	000	2	SHORT	ST	6305	Overhead	Distribution	Luminaire	LUM HPS RWY 50W	Active	50	65485-54003	S-14	CITY OF E PROVIDENCE
0003	000	2	SHORT	ST	6305	Overhead	Distribution	Luminaire	LUM HPS RWY 50W	Active	50	65485-54003	S-14	CITY OF E PROVIDENCE
0002	000	2	SIDNEY	ST	6310	Overhead	Distribution	Luminaire	LUM HPS RWY 50W	Active	50	65485-54003	S-14	CITY OF E PROVIDENCE
0004	000	2	SIDNEY	ST	6310	Overhead	Distribution	Luminaire	LUM HPS RWY 50W	Active	50	65485-54003	S-14	CITY OF E PROVIDENCE
0006	000	2	SIDNEY	ST	6310	Overhead	Distribution	Luminaire	LUM HPS RWY 50W	Active	50	65485-54003	S-14	CITY OF E PROVIDENCE
0007	000	2	SIDNEY	ST	6310	Overhead	Distribution	Luminaire	LUM HPS RWY 50W TT	Temp Turn Off	50	65485-54003	S-14	CITY OF E PROVIDENCE
0002	000	2	SILVER	ST	6315	Overhead	Distribution	Luminaire	LUM HPS RWY 50W	Active	50	65485-54003	S-14	CITY OF E PROVIDENCE
0002	000	2	SILVER SPRING	AVE	6320	Overhead	Distribution	Luminaire	LUM HPS RWY 50W	Active	50	65485-54003	S-14	CITY OF E PROVIDENCE
0004	000	2	SILVER SPRING	AVE	6320	Overhead	Distribution	Luminaire	LUM HPS RWY 50W	Active	50	65485-54003	S-14	CITY OF E PROVIDENCE
0006	000	2	SILVER SPRING	AVE	6320	Overhead	Distribution	Luminaire	LUM HPS RWY 50W TT	Temp Turn Off	50	65485-54003	S-14	CITY OF E PROVIDENCE
0007	000	2	SILVER SPRING	AVE	6320	Overhead	Distribution	Luminaire	LUM HPS RWY 50W	Active	50	65485-54003	S-14	CITY OF E PROVIDENCE
0008	000	2	SILVER SPRING	AVE	6320	Overhead	Distribution	Luminaire	LUM HPS RWY 50W	Active	50	65485-54003	S-14	CITY OF E PROVIDENCE
0010	000	2	SILVER SPRING	AVE	6320	Overhead	Distribution	Luminaire	LUM HPS RWY 50W TT	Temp Turn Off	50	65485-54003	S-14	CITY OF E PROVIDENCE
0011	050	2	SILVER SPRING	AVE	6320	Overhead	Distribution	Luminaire	LUM HPS RWY 100W	Active	100	65485-54003	S-14	CITY OF E PROVIDENCE
0012	000	2	SILVER SPRING	AVE	6320	Overhead	Distribution	Luminaire	LUM HPS RWY 100W	Active	100	65485-54003	S-14	CITY OF E PROVIDENCE
0014	000	2	SILVER SPRING	AVE	6320	Overhead	Distribution	Luminaire	LUM HPS RWY 100W	Active	100	65485-54003	S-14	CITY OF E PROVIDENCE
0001	000	2	SIXTH	ST	6325	Overhead	Distribution	Luminaire	LUM HPS RWY 50W	Active	50	65485-54003	S-14	CITY OF E PROVIDENCE

Pole No	Pole Suffix	Light Sequ No	Street Name	Street Suffix	Ngrid Line No	Source Type	Pole Use	Component Type	Bill Print and Tariff Description	Billing Status	Lamp Wattage	Account No	Rate	Customer Name
0002	000	2	SIXTH	ST	6325	Overhead	Distribution	Luminaire	LUM HPS RWY 100W TT	Temp Turn Off	100	65485-54003	S-14	CITY OF E PROVIDENCE
0004	000	2	SIXTH	ST	6325	Overhead	Distribution	Luminaire	LUM HPS RWY 50W	Active	50	65485-54003	S-14	CITY OF E PROVIDENCE
0005	000	2	SIXTH	ST	6325	Overhead	Distribution	Luminaire	LUM HPS RWY 50W	Active	50	65485-54003	S-14	CITY OF E PROVIDENCE
0008	000	2	SIXTH	ST	6325	Overhead	Distribution	Luminaire	LUM HPS RWY 50W	Active	50	65485-54003	S-14	CITY OF E PROVIDENCE
0010	000	2	SIXTH	ST	6325	Overhead	Distribution	Luminaire	LUM HPS RWY 50W	Active	50	65485-54003	S-14	CITY OF E PROVIDENCE
0012	000	1	SIXTH	ST	6325	Overhead	Distribution	Luminaire	LUM HPS RWY 50W	Active	50	65485-54003	S-14	CITY OF E PROVIDENCE
0001	000	1	SKYCREST	AVE	6330	Overhead	Distribution	Luminaire	LUM HPS RWY 50W	Active	50	65485-54003	S-14	CITY OF E PROVIDENCE
0002	000	2	SKYCREST	AVE	6330	Overhead	Distribution	Luminaire	LUM HPS RWY 50W	Active	50	65485-54003	S-14	CITY OF E PROVIDENCE
0003	000	2	SKYCREST	AVE	6330	Overhead	Distribution	Luminaire	LUM HPS RWY 50W	Active	50	65485-54003	S-14	CITY OF E PROVIDENCE
0004	000	2	SKYCREST	AVE	6330	Overhead	Distribution	Luminaire	LUM HPS RWY 50W TT	Temp Turn Off	50	65485-54003	S-14	CITY OF E PROVIDENCE
0005	000	2	SKYCREST	AVE	6330	Overhead	Distribution	Luminaire	LUM HPS RWY 50W	Active	50	65485-54003	S-14	CITY OF E PROVIDENCE
0006	000	2	SKYCREST	AVE	6330	Overhead	Distribution	Luminaire	LUM HPS RWY 50W TT	Temp Turn Off	50	90426-19008	S-14	CITY OF E PROVIDENCE
0001	000	2	SLOCUM	ST	6335	Overhead	Distribution	Luminaire	LUM HPS RWY 50W TT	Temp Turn Off	50	65485-54003	S-14	CITY OF E PROVIDENCE
0002	000	2	SLOCUM	ST	6335	Overhead	Distribution	Luminaire	LUM HPS RWY 50W	Active	50	65485-54003	S-14	CITY OF E PROVIDENCE
0001	000	2	SMITH	ST	6345	Overhead	Distribution	Luminaire	LUM HPS RWY 50W	Active	50	65485-54003	S-14	CITY OF E PROVIDENCE
0002	000	2	SMITH	ST	6345	Overhead	Distribution	Luminaire	LUM HPS RWY 50W TT	Temp Turn Off	50	65485-54003	S-14	CITY OF E PROVIDENCE
0004	000	2	SMITH	ST	6345	Overhead	Distribution	Luminaire	LUM HPS RWY 50W	Active	50	65485-54003	S-14	CITY OF E PROVIDENCE
0005	000	2	SMITH	ST	6345	Overhead	Distribution	Luminaire	LUM HPS RWY 50W	Active	50	65485-54003	S-14	CITY OF E PROVIDENCE
0007	000	2	SMITH	ST	6345	Overhead	Distribution	Luminaire	LUM HPS RWY 50W	Active	50	65485-54003	S-14	CITY OF E PROVIDENCE
0008	000	2	SMITH	ST	6345	Overhead	Distribution	Luminaire	LUM HPS RWY 50W	Active	50	65485-54003	S-14	CITY OF E PROVIDENCE
0009	000	2	SMITH	ST	6345	Overhead	Distribution	Luminaire	LUM HPS RWY 50W TT	Temp Turn Off	50	65485-54003	S-14	CITY OF E PROVIDENCE
0010	000	2	SMITH	ST	6345	Overhead	Distribution	Luminaire	LUM HPS RWY 100W	Active	100	65485-54003	S-14	CITY OF E PROVIDENCE
0011	000	2	SMITH	ST	6345	Overhead	Distribution	Luminaire	LUM HPS RWY 100W	Active	100	65485-54003	S-14	CITY OF E PROVIDENCE
0012	000	2	SMITH	ST	6345	Overhead	Distribution	Luminaire	LUM HPS RWY 50W	Active	50	65485-54003	S-14	CITY OF E PROVIDENCE
0013	000	2	SMITH	ST	6345	Overhead	Distribution	Luminaire	LUM HPS RWY 100W TT	Temp Turn Off	100	65485-54003	S-14	CITY OF E PROVIDENCE
0014	000	2	SMITH	ST	6345	Overhead	Distribution	Luminaire	LUM HPS RWY 50W	Active	50	65485-54003	S-14	CITY OF E PROVIDENCE
0015	000	2	SMITH	ST	6345	Overhead	Distribution	Luminaire	LUM HPS RWY 50W TT	Temp Turn Off	50	65485-54003	S-14	CITY OF E PROVIDENCE
0018	000	2	SMITH	ST	6345	Overhead	Distribution	Luminaire	LUM HPS RWY 50W	Active	50	65485-54003	S-14	CITY OF E PROVIDENCE
0019	050	2	SMITH	ST	6345	Overhead	Distribution	Luminaire	LUM HPS RWY 50W TT	Temp Turn Off	50	65485-54003	S-14	CITY OF E PROVIDENCE
0020	000	2	SMITH	ST	6345	Overhead	Distribution	Luminaire	LUM HPS RWY 50W	Active	50	65485-54003	S-14	CITY OF E PROVIDENCE
0002	000	2	SOMMERSET	AVE	6350	Overhead	Distribution	Luminaire	LUM HPS RWY 50W	Active	50	65485-54003	S-14	CITY OF E PROVIDENCE
0003	000	2	SOMMERSET	AVE	6350	Overhead	Distribution	Luminaire	LUM HPS RWY 50W TT	Temp Turn Off	50	65485-54003	S-14	CITY OF E PROVIDENCE
0004	000	2	SOMMERSET	AVE	6350	Overhead	Distribution	Luminaire	LUM HPS RWY 50W	Active	50	65485-54003	S-14	CITY OF E PROVIDENCE
0005	000	2	SOMMERSET	AVE	6350	Overhead	Distribution	Luminaire	LUM HPS RWY 50W TT	Temp Turn Off	50	65485-54003	S-14	CITY OF E PROVIDENCE
0006	000	2	SOMMERSET	AVE	6350	Overhead	Distribution	Luminaire	LUM HPS RWY 50W	Active	50	65485-54003	S-14	CITY OF E PROVIDENCE
0007	000	1	SOMMERSET	AVE	6350	Overhead	Distribution	Luminaire	LUM HPS RWY 100W	Active	100	65485-54003	S-14	CITY OF E PROVIDENCE
0008	000	1	SOMMERSET	AVE	6350	Overhead	Distribution	Luminaire	LUM HPS RWY 100W	Active	100	65485-54003	S-14	CITY OF E PROVIDENCE
0009	000	1	SOMMERSET	AVE	6350	Overhead	Distribution	Luminaire	LUM HPS RWY 100W	Active	100	65485-54003	S-14	CITY OF E PROVIDENCE
0000	050	2	SOUTH BLOSSOM	ST	450	Overhead	Distribution	Luminaire	LUM HPS RWY 50W	Active	50	65485-54003	S-14	CITY OF E PROVIDENCE
0001	000	2	SOUTH BLOSSOM	ST	450	Overhead	Distribution	Luminaire	LUM HPS RWY 50W	Active	50	65485-54003	S-14	CITY OF E PROVIDENCE
0003	000	2	SOUTH BLOSSOM	ST	450	Overhead	Distribution	Luminaire	LUM HPS RWY 50W	Active	50	65485-54003	S-14	CITY OF E PROVIDENCE
0005	000	2	SOUTH BLOSSOM	ST	450	Overhead	Distribution	Luminaire	LUM HPS RWY 50W	Active	50	65485-54003	S-14	CITY OF E PROVIDENCE
0001	000	1	SOUTH BROADWAY	ST	6355	Overhead	Distribution	Luminaire	LUM HPS RWY 100W	Active	100	65485-54003	S-14	CITY OF E PROVIDENCE
0003	000	2	SOUTH BROADWAY	ST	6355	Overhead	Distribution	Luminaire	LUM HPS RWY 250W TT	Temp Turn Off	250	65485-54003	S-14	CITY OF E PROVIDENCE
0004	000	1	SOUTH BROADWAY	ST	6355	Overhead	Distribution	Luminaire	LUM HPS RWY 100W	Active	100	65485-54003	S-14	CITY OF E PROVIDENCE
0005	000	2	SOUTH BROADWAY	ST	6355	Overhead	Distribution	Luminaire	LUM HPS RWY 250W TT	Temp Turn Off	250	65485-54003	S-14	CITY OF E PROVIDENCE
0006	000	2	SOUTH BROADWAY	ST	6355	Overhead	Distribution	Luminaire	LUM HPS RWY 250W TT	Temp Turn Off	250	65485-54003	S-14	CITY OF E PROVIDENCE
0007	000	1	SOUTH BROADWAY	ST	6355	Overhead	Distribution	Luminaire	LUM HPS RWY 100W	Active	100	65485-54003	S-14	CITY OF E PROVIDENCE
0008	000	2	SOUTH BROADWAY	ST	6355	Overhead	Distribution	Luminaire	LUM HPS RWY 250W TT	Temp Turn Off	250	65485-54003	S-14	CITY OF E PROVIDENCE
0009	000	1	SOUTH BROADWAY	ST	6355	Overhead	Distribution	Luminaire	LUM HPS RWY 100W	Active	100	65485-54003	S-14	CITY OF E PROVIDENCE
0010	000	2	SOUTH BROADWAY	ST	6355	Overhead	Distribution	Luminaire	LUM HPS RWY 250W	Active	250	65485-54003	S-14	CITY OF E PROVIDENCE
0011	000	1	SOUTH BROADWAY	ST	6355	Overhead	Distribution	Luminaire	LUM HPS RWY 100W	Active	100	65485-54003	S-14	CITY OF E PROVIDENCE
0012	000	2	SOUTH BROADWAY	ST	6355	Overhead	Distribution	Luminaire	LUM HPS RWY 250W TT	Temp Turn Off	250	65485-54003	S-14	CITY OF E PROVIDENCE
0014	000	1	SOUTH BROADWAY	ST	6355	Overhead	Distribution	Luminaire	LUM HPS RWY 100W	Active	100	65485-54003	S-14	CITY OF E PROVIDENCE
0016	000	1	SOUTH BROADWAY	ST	6355	Overhead	Distribution	Luminaire	LUM HPS RWY 100W	Active	100	65485-54003	S-14	CITY OF E PROVIDENCE

Pole No	Pole Suffix	Light Sequ No	Street Name	Street Suffix	Ngrid Line No	Source Type	Pole Use	Component Type	Bill Print and Tariff Description	Billing Status	Lamp Wattage	Account No	Rate	Customer Name
0017	000	1	SOUTH BROADWAY	ST	6355	Overhead	Distribution	Luminaire	LUM HPS RWY 100W	Active	100	65485-54003	S-14	CITY OF E PROVIDENCE
0018	000	1	SOUTH BROADWAY	ST	6355	Overhead	Distribution	Luminaire	LUM HPS RWY 100W	Active	100	65485-54003	S-14	CITY OF E PROVIDENCE
0020	000	1	SOUTH BROADWAY	ST	6355	Overhead	Distribution	Luminaire	LUM HPS RWY 100W	Active	100	65485-54003	S-14	CITY OF E PROVIDENCE
0021	000	2	SOUTH BROADWAY	ST	6355	Overhead	Distribution	Luminaire	LUM HPS RWY 250W TT	Temp Turn Off	250	65485-54003	S-14	CITY OF E PROVIDENCE
0023	000	1	SOUTH BROADWAY	ST	6355	Overhead	Distribution	Luminaire	LUM HPS RWY 100W	Active	100	65485-54003	S-14	CITY OF E PROVIDENCE
0024	000	1	SOUTH BROADWAY	ST	6355	Overhead	Distribution	Luminaire	LUM HPS RWY 100W	Active	100	65485-54003	S-14	CITY OF E PROVIDENCE
0025	000	2	SOUTH BROADWAY	ST	6355	Overhead	Distribution	Luminaire	LUM HPS RWY 250W TT	Temp Turn Off	250	65485-54003	S-14	CITY OF E PROVIDENCE
0028	000	1	SOUTH BROADWAY	ST	6355	Overhead	Distribution	Luminaire	LUM HPS RWY 100W	Active	100	65485-54003	S-14	CITY OF E PROVIDENCE
0030	000	1	SOUTH BROADWAY	ST	6355	Overhead	Distribution	Luminaire	LUM HPS RWY 100W	Active	100	65485-54003	S-14	CITY OF E PROVIDENCE
0033	000	1	SOUTH BROADWAY	ST	6355	Overhead	Distribution	Luminaire	LUM HPS RWY 100W	Active	100	65485-54003	S-14	CITY OF E PROVIDENCE
0034	000	1	SOUTH BROADWAY	ST	6355	Overhead	Distribution	Luminaire	LUM HPS RWY 100W	Active	100	65485-54003	S-14	CITY OF E PROVIDENCE
0035	000	2	SOUTH BROADWAY	ST	6355	Overhead	Distribution	Luminaire	LUM HPS RWY 250W	Active	250	65485-54003	S-14	CITY OF E PROVIDENCE
0037	000	1	SOUTH BROADWAY	ST	6355	Overhead	Distribution	Luminaire	LUM HPS RWY 100W	Active	100	65485-54003	S-14	CITY OF E PROVIDENCE
0039	000	1	SOUTH BROADWAY	ST	6355	Overhead	Distribution	Luminaire	LUM HPS RWY 100W	Active	100	65485-54003	S-14	CITY OF E PROVIDENCE
0042	000	1	SOUTH BROADWAY	ST	6355	Overhead	Distribution	Luminaire	LUM HPS RWY 100W	Active	100	65485-54003	S-14	CITY OF E PROVIDENCE
0044	000	1	SOUTH BROADWAY	ST	6355	Overhead	Distribution	Luminaire	LUM HPS RWY 100W	Active	100	65485-54003	S-14	CITY OF E PROVIDENCE
0046	000	1	SOUTH BROADWAY	ST	6355	Overhead	Distribution	Luminaire	LUM HPS RWY 100W	Active	100	65485-54003	S-14	CITY OF E PROVIDENCE
0048	000	1	SOUTH BROADWAY	ST	6355	Overhead	Distribution	Luminaire	LUM HPS RWY 100W TT	Temp Turn Off	100	65485-54003	S-14	CITY OF E PROVIDENCE
0049	000	1	SOUTH BROADWAY	ST	6355	Overhead	Distribution	Luminaire	LUM HPS RWY 100W	Active	100	65485-54003	S-14	CITY OF E PROVIDENCE
0005	000	0	SOUTH BROW	ST	585	Underground	Street Lighting	Pole	POLE METAL =>25FT	Inactive	0	65485-54003	S-14	CITY OF E PROVIDENCE
0005	000	1	SOUTH BROW	ST	585	Underground	Street Lighting	Luminaire	LUM HPS RWY 250W	Inactive	250	65485-54003	S-14	CITY OF E PROVIDENCE
9013	050	2	SOUTH BROW	ST	585	Overhead	Distribution	Luminaire	LUM HPS RWY 50W	Active	50	65485-54003	S-14	CITY OF E PROVIDENCE
9015	000	2	SOUTH BROW	ST	585	Overhead	Distribution	Luminaire	LUM HPS RWY 50W	Active	50	65485-54003	S-14	CITY OF E PROVIDENCE
0001	000	2	SOUTH CARPENTER	ST	6357	Overhead	Distribution	Luminaire	LUM HPS RWY 50W	Active	50	65485-54003	S-14	CITY OF E PROVIDENCE
0003	000	2	SOUTH CARPENTER	ST	6357	Overhead	Distribution	Luminaire	LUM HPS RWY 50W	Active	50	90426-19008	S-14	CITY OF E PROVIDENCE
0028	000	2	SOUTH COUNTY	ST	895	Overhead	Distribution	Luminaire	LUM HPS RWY 50W	Active	50	65485-54003	S-14	CITY OF E PROVIDENCE
0022	000	2	SOUTH HULL	ST	1830	Overhead	Distribution	Luminaire	LUM HPS RWY 50W	Active	50	65485-54003	S-14	CITY OF E PROVIDENCE
0002	000	2	SOUTH PHILLIP	ST	4755	Overhead	Distribution	Luminaire	LUM HPS RWY 50W	Active	50	65485-54003	S-14	CITY OF E PROVIDENCE
0002	000	1	SOUTH PROSPECT	ST	4935	Overhead	Distribution	Luminaire	LUM HPS RWY 50W	Active	50	65485-54003	S-14	CITY OF E PROVIDENCE
0000	050	2	SOUTH ROSE	ST	6150	Overhead	Distribution	Luminaire	LUM HPS RWY 50W	Active	50	65485-54003	S-14	CITY OF E PROVIDENCE
0001	000	2	SOUTH ROSE	ST	6150	Overhead	Distribution	Luminaire	LUM HPS RWY 50W	Active	50	65485-54003	S-14	CITY OF E PROVIDENCE
0002	050	2	SOUTH ROSE	ST	6150	Overhead	Distribution	Luminaire	LUM HPS RWY 50W	Active	50	65485-54003	S-14	CITY OF E PROVIDENCE
0004	000	2	SOUTH ROSE	ST	6150	Overhead	Distribution	Luminaire	LUM HPS RWY 50W	Active	50	65485-54003	S-14	CITY OF E PROVIDENCE
0006	000	2	SOUTH ROSE	ST	6150	Overhead	Distribution	Luminaire	LUM HPS RWY 50W	Active	50	65485-54003	S-14	CITY OF E PROVIDENCE
9007	000	2	SOUTH ROSE	ST	6150	Overhead	Distribution	Luminaire	LUM HPS RWY 50W	Active	50	65485-54003	S-14	CITY OF E PROVIDENCE
0009	000	2	SOUTH SPRUCE	ST	6360	Overhead	Distribution	Luminaire	LUM HPS RWY 50W	Active	50	65485-54003	S-14	CITY OF E PROVIDENCE
0011	000	2	SOUTH SPRUCE	ST	6360	Overhead	Distribution	Luminaire	LUM HPS RWY 50W	Active	50	65485-54003	S-14	CITY OF E PROVIDENCE
0013	000	2	SOUTH SPRUCE	ST	6360	Overhead	Distribution	Luminaire	LUM HPS RWY 50W	Active	50	65485-54003	S-14	CITY OF E PROVIDENCE
0013	050	2	SOUTH SPRUCE	ST	6360	Overhead	Distribution	Luminaire	LUM HPS RWY 50W	Active	50	65485-54003	S-14	CITY OF E PROVIDENCE
0015	000	2	SOUTH SPRUCE	ST	6360	Overhead	Distribution	Luminaire	LUM HPS RWY 50W	Active	50	65485-54003	S-14	CITY OF E PROVIDENCE
0017	000	2	SOUTH SPRUCE	ST	6360	Overhead	Distribution	Luminaire	LUM HPS RWY 50W TT	Temp Turn Off	50	65485-54003	S-14	CITY OF E PROVIDENCE
0018	000	2	SOUTH SPRUCE	ST	6360	Overhead	Distribution	Luminaire	LUM HPS RWY 50W	Active	50	65485-54003	S-14	CITY OF E PROVIDENCE
0020	000	2	SOUTH SPRUCE	ST	6360	Overhead	Distribution	Luminaire	LUM HPS RWY 50W	Active	50	65485-54003	S-14	CITY OF E PROVIDENCE
0001	000	0	SPINNAKER	DR	8761	Underground	Street Lighting	Pole	POLE FIBER RWY=>25	Inactive	0	65485-54003	S-14	CITY OF E PROVIDENCE
0001	000	1	SPINNAKER	DR	8761	Underground	Street Lighting	Luminaire	LUM HPS RWY 100W	Active	100	65485-54003	S-14	CITY OF E PROVIDENCE
0002	000	0	SPINNAKER	DR	8761	Underground	Street Lighting	Pole	POLE FIBER RWY=>25	Inactive	0	65485-54003	S-14	CITY OF E PROVIDENCE
0002	000	1	SPINNAKER	DR	8761	Underground	Street Lighting	Luminaire	LUM HPS RWY 100W	Active	100	65485-54003	S-14	CITY OF E PROVIDENCE
0001	000	2	SPRAGUE	AVE	6370	Overhead	Distribution	Luminaire	LUM HPS RWY 50W	Active	50	65485-54003	S-14	CITY OF E PROVIDENCE
0003	000	2	SPRAGUE	AVE	6370	Overhead	Distribution	Luminaire	LUM HPS RWY 50W	Active	50	65485-54003	S-14	CITY OF E PROVIDENCE
0005	000	2	SPRAGUE	AVE	6370	Overhead	Distribution	Luminaire	LUM HPS RWY 50W	Active	50	65485-54003	S-14	CITY OF E PROVIDENCE
0006	000	2	SPRAGUE	AVE	6370	Overhead	Distribution	Luminaire	LUM HPS RWY 50W	Active	50	65485-54003	S-14	CITY OF E PROVIDENCE
0007	000	2	SPRAGUE	AVE	6370	Overhead	Distribution	Luminaire	LUM HPS RWY 50W TT	Temp Turn Off	50	65485-54003	S-14	CITY OF E PROVIDENCE
0009	000	2	SPRAGUE	AVE	6370	Overhead	Distribution	Luminaire	LUM HPS RWY 50W	Active	50	65485-54003	S-14	CITY OF E PROVIDENCE
0011	000	2	SPRAGUE	AVE	6370	Overhead	Distribution	Luminaire	LUM HPS RWY 50W	Active	50	65485-54003	S-14	CITY OF E PROVIDENCE
0001	000	2	SPRING	ST	6375	Overhead	Distribution	Luminaire	LUM HPS RWY 50W TT	Temp Turn Off	50	65485-54003	S-14	CITY OF E PROVIDENCE

Pole No	Pole Suffix	Light Sequ No	Street Name	Street Suffix	Ngrid Line No	Source Type	Pole Use	Component Type	Bill Print and Tariff Description	Billing Status	Lamp Wattage	Account No	Rate	Customer Name
0003	000	2	SPRING	ST	6375	Overhead	Distribution	Luminaire	LUM HPS RWY 50W	Active	50	65485-54003	S-14	CITY OF E PROVIDENCE
0005	000	2	SPRING	ST	6375	Overhead	Distribution	Luminaire	LUM HPS RWY 50W TT	Temp Turn Off	50	65485-54003	S-14	CITY OF E PROVIDENCE
0007	000	2	SPRING	ST	6375	Overhead	Distribution	Luminaire	LUM HPS RWY 50W	Active	50	65485-54003	S-14	CITY OF E PROVIDENCE
0009	000	2	SPRING	ST	6375	Overhead	Distribution	Luminaire	LUM HPS RWY 50W	Active	50	65485-54003	S-14	CITY OF E PROVIDENCE
0012	000	1	SQUANTUM	RD	6385	Overhead	Distribution	Luminaire	LUM HPS RWY 50W	Active	50	65485-54003	S-14	CITY OF E PROVIDENCE
0001	000	0	SQUIRE	LN	6386	Underground	Street Lighting	Pole	POLE METAL =>25FT	Inactive	0	65485-54003	S-14	CITY OF E PROVIDENCE
0001	000	2	SQUIRE	LN	6386	Underground	Street Lighting	Luminaire	LUM HPS RWY 100W TT	Temp Turn Off	100	65485-54003	S-14	CITY OF E PROVIDENCE
0002	000	0	SQUIRE	LN	6386	Underground	Street Lighting	Pole	POLE METAL W/BASE	Active	0	65485-54003	S-14	CITY OF E PROVIDENCE
0002	000	1	SQUIRE	LN	6386	Underground	Street Lighting	Luminaire	LUM HPS RWY 100W	Active	100	65485-54003	S-14	CITY OF E PROVIDENCE
0001	000	1	STANDISH	AVE	6390	Overhead	Distribution	Luminaire	LUM HPS RWY 50W	Inactive	50	65485-54003	S-14	CITY OF E PROVIDENCE
0002	000	1	STANDISH	AVE	6390	Overhead	Distribution	Luminaire	LUM HPS RWY 100W	Active	100	90426-19008	S-14	CITY OF E PROVIDENCE
0001	000	2	STANTON	AVE	6395	Overhead	Distribution	Luminaire	LUM HPS RWY 50W	Active	50	65485-54003	S-14	CITY OF E PROVIDENCE
0001	050	2	STANTON	AVE	6395	Overhead	Distribution	Luminaire	LUM HPS RWY 50W	Active	50	65485-54003	S-14	CITY OF E PROVIDENCE
0002	050	2	STANTON	AVE	6395	Overhead	Distribution	Luminaire	LUM HPS RWY 50W	Active	50	65485-54003	S-14	CITY OF E PROVIDENCE
0004	000	2	STANTON	AVE	6395	Overhead	Distribution	Luminaire	LUM HPS RWY 50W TT	Temp Turn Off	50	65485-54003	S-14	CITY OF E PROVIDENCE
0007	000	2	STANTON	AVE	6395	Overhead	Distribution	Luminaire	LUM HPS RWY 50W TT	Temp Turn Off	50	65485-54003	S-14	CITY OF E PROVIDENCE
0009	000	2	STANTON	AVE	6395	Overhead	Distribution	Luminaire	LUM HPS RWY 50W	Active	50	65485-54003	S-14	CITY OF E PROVIDENCE
0001	000	2	STAR	AVE	6400	Overhead	Distribution	Luminaire	LUM HPS RWY 50W	Active	50	65485-54003	S-14	CITY OF E PROVIDENCE
0002	000	2	STAR	AVE	6400	Overhead	Distribution	Luminaire	LUM HPS RWY 50W TT	Temp Turn Off	50	65485-54003	S-14	CITY OF E PROVIDENCE
0005	000	2	STAR	AVE	6400	Overhead	Distribution	Luminaire	LUM HPS RWY 50W	Active	50	65485-54003	S-14	CITY OF E PROVIDENCE
0007	000	2	STAR	AVE	6400	Overhead	Distribution	Luminaire	LUM HPS RWY 50W	Active	50	65485-54003	S-14	CITY OF E PROVIDENCE
0001	000	2	STATE	ST	6405	Overhead	Distribution	Luminaire	LUM HPS RWY 50W TT	Temp Turn Off	50	65485-54003	S-14	CITY OF E PROVIDENCE
0003	000	2	STATE	ST	6405	Overhead	Distribution	Luminaire	LUM HPS RWY 50W	Active	50	65485-54003	S-14	CITY OF E PROVIDENCE
0005	000	2	STATE	ST	6405	Overhead	Distribution	Luminaire	LUM HPS RWY 50W	Active	50	65485-54003	S-14	CITY OF E PROVIDENCE
0001	000	2	STEPHEN	ST	6410	Overhead	Distribution	Luminaire	LUM HPS RWY 50W	Active	50	65485-54003	S-14	CITY OF E PROVIDENCE
0002	000	2	STEPHEN	ST	6410	Overhead	Distribution	Luminaire	LUM HPS RWY 50W	Active	50	65485-54003	S-14	CITY OF E PROVIDENCE
0004	000	2	STEPHEN	ST	6410	Overhead	Distribution	Luminaire	LUM HPS RWY 50W	Active	50	65485-54003	S-14	CITY OF E PROVIDENCE
0002	000	2	STERLING	ST	6415	Overhead	Distribution	Luminaire	LUM HPS RWY 50W	Active	50	65485-54003	S-14	CITY OF E PROVIDENCE
0003	000	2	STERLING	ST	6415	Overhead	Distribution	Luminaire	LUM HPS RWY 50W TT	Temp Turn Off	50	65485-54003	S-14	CITY OF E PROVIDENCE
0005	000	2	STERLING	ST	6415	Overhead	Distribution	Luminaire	LUM HPS RWY 50W	Active	50	65485-54003	S-14	CITY OF E PROVIDENCE
0008	000	2	STERLING	ST	6415	Overhead	Distribution	Luminaire	LUM HPS RWY 50W	Active	50	65485-54003	S-14	CITY OF E PROVIDENCE
0001	000	2	STONEHAM	DR	6425	Overhead	Distribution	Luminaire	LUM HPS RWY 50W	Active	50	65485-54003	S-14	CITY OF E PROVIDENCE
0002	000	2	STONEHAM	DR	6425	Overhead	Distribution	Luminaire	LUM HPS RWY 50W TT	Temp Turn Off	50	65485-54003	S-14	CITY OF E PROVIDENCE
0003	000	2	STONEHAM	DR	6425	Overhead	Distribution	Luminaire	LUM HPS RWY 50W	Active	50	65485-54003	S-14	CITY OF E PROVIDENCE
0001	000	2	STOWE	AVE	6430	Overhead	Distribution	Luminaire	LUM HPS RWY 50W	Active	50	65485-54003	S-14	CITY OF E PROVIDENCE
0006	000	2	STOWE	AVE	6430	Overhead	Distribution	Luminaire	LUM HPS RWY 50W	Active	50	90426-19008	S-14	CITY OF E PROVIDENCE
0007	000	2	STOWE	AVE	6430	Overhead	Distribution	Luminaire	LUM HPS RWY 50W	Active	50	90426-19008	S-14	CITY OF E PROVIDENCE
0008	000	2	STOWE	AVE	6430	Overhead	Distribution	Luminaire	LUM HPS RWY 50W	Active	50	90426-19008	S-14	CITY OF E PROVIDENCE
0002	000	2	SUMACH	AVE	6440	Overhead	Distribution	Luminaire	LUM HPS RWY 50W	Active	50	65485-54003	S-14	CITY OF E PROVIDENCE
0003	000	2	SUMACH	AVE	6440	Overhead	Distribution	Luminaire	LUM HPS RWY 50W TT	Temp Turn Off	50	65485-54003	S-14	CITY OF E PROVIDENCE
0004	000	2	SUMACH	AVE	6440	Overhead	Distribution	Luminaire	LUM HPS RWY 50W	Active	50	65485-54003	S-14	CITY OF E PROVIDENCE
0005	050	2	SUMACH	AVE	6440	Overhead	Distribution	Luminaire	LUM HPS RWY 50W	Active	50	65485-54003	S-14	CITY OF E PROVIDENCE
0007	000	2	SUMACH	AVE	6440	Overhead	Distribution	Luminaire	LUM HPS RWY 50W	Active	50	65485-54003	S-14	CITY OF E PROVIDENCE
0002	000	2	SUMMIT	ST	6445	Overhead	Distribution	Luminaire	LUM HPS RWY 50W	Active	50	65485-54003	S-14	CITY OF E PROVIDENCE
0004	000	2	SUMMIT	ST	6445	Overhead	Distribution	Luminaire	LUM HPS RWY 50W	Active	50	65485-54003	S-14	CITY OF E PROVIDENCE
0005	050	2	SUMMIT	ST	6445	Overhead	Distribution	Luminaire	LUM HPS RWY 50W	Active	50	65485-54003	S-14	CITY OF E PROVIDENCE
0006	000	2	SUMMIT	ST	6445	Overhead	Distribution	Luminaire	LUM HPS RWY 50W TT	Temp Turn Off	50	65485-54003	S-14	CITY OF E PROVIDENCE
0007	000	2	SUMMIT	ST	6445	Overhead	Distribution	Luminaire	LUM HPS RWY 50W	Active	50	65485-54003	S-14	CITY OF E PROVIDENCE
0008	000	2	SUMMIT	ST	6445	Overhead	Distribution	Luminaire	LUM HPS RWY 50W TT	Temp Turn Off	50	65485-54003	S-14	CITY OF E PROVIDENCE
0009	000	2	SUMMIT	ST	6445	Overhead	Distribution	Luminaire	LUM HPS RWY 50W	Active	50	65485-54003	S-14	CITY OF E PROVIDENCE
0010	000	2	SUMMIT	ST	6445	Overhead	Distribution	Luminaire	LUM HPS RWY 50W TT	Temp Turn Off	50	65485-54003	S-14	CITY OF E PROVIDENCE
0011	000	2	SUMMIT	ST	6445	Overhead	Distribution	Luminaire	LUM HPS RWY 50W	Active	50	65485-54003	S-14	CITY OF E PROVIDENCE
0012	000	2	SUMMIT	ST	6445	Overhead	Distribution	Luminaire	LUM HPS RWY 50W TT	Temp Turn Off	50	65485-54003	S-14	CITY OF E PROVIDENCE
0013	000	2	SUMMIT	ST	6445	Overhead	Distribution	Luminaire	LUM HPS RWY 50W	Active	50	65485-54003	S-14	CITY OF E PROVIDENCE
0014	000	2	SUMMIT	ST	6445	Overhead	Distribution	Luminaire	LUM HPS RWY 50W	Active	50	65485-54003	S-14	CITY OF E PROVIDENCE

Pole No	Pole Suffix	Light Sequ No	Street Name	Street Suffix	Ngrid Line No	Source Type	Pole Use	Component Type	Bill Print and Tariff Description	Billing Status	Lamp Wattage	Account No	Rate	Customer Name
0015	000	2	SUMMIT	ST	6445	Overhead	Distribution	Luminaire	LUM HPS RWY 50W	Active	50	65485-54003	S-14	CITY OF E PROVIDENCE
0016	000	2	SUMMIT	ST	6445	Overhead	Distribution	Luminaire	LUM HPS RWY 50W TT	Temp Turn Off	50	65485-54003	S-14	CITY OF E PROVIDENCE
0017	000	2	SUMMIT	ST	6445	Overhead	Distribution	Luminaire	LUM HPS RWY 50W	Active	50	65485-54003	S-14	CITY OF E PROVIDENCE
0018	000	2	SUMMIT	ST	6445	Overhead	Distribution	Luminaire	LUM HPS RWY 50W TT	Temp Turn Off	50	65485-54003	S-14	CITY OF E PROVIDENCE
0019	000	2	SUMMIT	ST	6445	Overhead	Distribution	Luminaire	LUM HPS RWY 50W	Active	50	65485-54003	S-14	CITY OF E PROVIDENCE
0020	000	2	SUMMIT	ST	6445	Overhead	Distribution	Luminaire	LUM HPS RWY 50W	Active	50	65485-54003	S-14	CITY OF E PROVIDENCE
0021	000	2	SUMMIT	ST	6445	Overhead	Distribution	Luminaire	LUM HPS RWY 50W	Active	50	65485-54003	S-14	CITY OF E PROVIDENCE
0022	000	2	SUMMIT	ST	6445	Overhead	Distribution	Luminaire	LUM HPS RWY 50W TT	Temp Turn Off	50	65485-54003	S-14	CITY OF E PROVIDENCE
0023	000	2	SUMMIT	ST	6445	Overhead	Distribution	Luminaire	LUM HPS RWY 50W	Active	50	65485-54003	S-14	CITY OF E PROVIDENCE
0015	000	2	SUNNYSIDE	AVE	6450	Overhead	Distribution	Luminaire	LUM HPS RWY 50W	Active	50	65485-54003	S-14	CITY OF E PROVIDENCE
0016	000	2	SUNNYSIDE	AVE	6450	Overhead	Distribution	Luminaire	LUM HPS RWY 50W	Active	50	65485-54003	S-14	CITY OF E PROVIDENCE
0018	000	2	SUNNYSIDE	AVE	6450	Overhead	Distribution	Luminaire	LUM HPS RWY 50W	Active	50	65485-54003	S-14	CITY OF E PROVIDENCE
0002	000	2	SUNSET	AVE	6455	Overhead	Distribution	Luminaire	LUM HPS RWY 50W TT	Temp Turn Off	50	65485-54003	S-14	CITY OF E PROVIDENCE
0004	000	2	SUNSET	AVE	6455	Overhead	Distribution	Luminaire	LUM HPS RWY 50W	Active	50	65485-54003	S-14	CITY OF E PROVIDENCE
0010	000	2	SUTCLIFE	CIR	6460	Overhead	Distribution	Luminaire	LUM HPS RWY 50W	Active	50	65485-54003	S-14	CITY OF E PROVIDENCE
0001	000	2	SUTTON	AVE	6465	Overhead	Distribution	Luminaire	LUM HPS RWY 50W	Active	50	65485-54003	S-14	CITY OF E PROVIDENCE
0002	000	2	SUTTON	AVE	6465	Overhead	Distribution	Luminaire	LUM HPS RWY 50W	Active	50	65485-54003	S-14	CITY OF E PROVIDENCE
0003	000	2	SUTTON	AVE	6465	Overhead	Distribution	Luminaire	LUM HPS RWY 50W	Active	50	65485-54003	S-14	CITY OF E PROVIDENCE
0003	050	2	SUTTON	AVE	6465	Overhead	Distribution	Luminaire	LUM HPS RWY 50W	Active	50	65485-54003	S-14	CITY OF E PROVIDENCE
0005	000	2	SUTTON	AVE	6465	Overhead	Distribution	Luminaire	LUM HPS RWY 50W	Active	50	65485-54003	S-14	CITY OF E PROVIDENCE
0007	000	2	SUTTON	AVE	6465	Overhead	Distribution	Luminaire	LUM HPS RWY 50W	Active	50	65485-54003	S-14	CITY OF E PROVIDENCE
0008	000	2	SUTTON	AVE	6465	Overhead	Distribution	Luminaire	LUM HPS RWY 50W	Active	50	65485-54003	S-14	CITY OF E PROVIDENCE
0010	000	2	SUTTON	AVE	6465	Overhead	Distribution	Luminaire	LUM HPS RWY 50W	Active	50	65485-54003	S-14	CITY OF E PROVIDENCE
0011	000	2	SUTTON	AVE	6465	Overhead	Distribution	Luminaire	LUM HPS RWY 50W	Active	50	65485-54003	S-14	CITY OF E PROVIDENCE
0012	000	2	SUTTON	AVE	6465	Overhead	Distribution	Luminaire	LUM HPS RWY 50W	Active	50	65485-54003	S-14	CITY OF E PROVIDENCE
0014	000	2	SUTTON	AVE	6465	Overhead	Distribution	Luminaire	LUM HPS RWY 50W	Active	50	65485-54003	S-14	CITY OF E PROVIDENCE
0016	000	2	SUTTON	AVE	6465	Overhead	Distribution	Luminaire	LUM HPS RWY 50W	Active	50	65485-54003	S-14	CITY OF E PROVIDENCE
0018	000	2	SUTTON	AVE	6465	Overhead	Distribution	Luminaire	LUM HPS RWY 50W	Active	50	65485-54003	S-14	CITY OF E PROVIDENCE
0020	000	2	SUTTON	AVE	6465	Overhead	Distribution	Luminaire	LUM HPS RWY 50W	Active	50	65485-54003	S-14	CITY OF E PROVIDENCE
0022	000	2	SUTTON	AVE	6465	Overhead	Distribution	Luminaire	LUM HPS RWY 50W	Active	50	65485-54003	S-14	CITY OF E PROVIDENCE
0025	000	2	SUTTON	AVE	6465	Overhead	Distribution	Luminaire	LUM HPS RWY 50W	Active	50	65485-54003	S-14	CITY OF E PROVIDENCE
0027	000	2	SUTTON	AVE	6465	Overhead	Distribution	Luminaire	LUM HPS RWY 50W	Active	50	65485-54003	S-14	CITY OF E PROVIDENCE
0029	000	2	SUTTON	AVE	6465	Overhead	Distribution	Luminaire	LUM HPS RWY 50W	Active	50	65485-54003	S-14	CITY OF E PROVIDENCE
0031	000	2	SUTTON	AVE	6465	Overhead	Distribution	Luminaire	LUM HPS RWY 50W	Active	50	65485-54003	S-14	CITY OF E PROVIDENCE
0033	000	2	SUTTON	AVE	6465	Overhead	Distribution	Luminaire	LUM HPS RWY 50W	Active	50	65485-54003	S-14	CITY OF E PROVIDENCE
0035	000	2	SUTTON	AVE	6465	Overhead	Distribution	Luminaire	LUM HPS RWY 50W	Active	50	65485-54003	S-14	CITY OF E PROVIDENCE
0036	000	2	SUTTON	AVE	6465	Overhead	Distribution	Luminaire	LUM HPS RWY 50W	Active	50	65485-54003	S-14	CITY OF E PROVIDENCE
0038	000	2	SUTTON	AVE	6465	Overhead	Distribution	Luminaire	LUM HPS RWY 50W	Active	50	65485-54003	S-14	CITY OF E PROVIDENCE
0001	000	2	SWAN	ST	6470	Overhead	Distribution	Luminaire	LUM HPS RWY 50W	Active	50	65485-54003	S-14	CITY OF E PROVIDENCE
0003	000	2	SWAN	ST	6470	Overhead	Distribution	Luminaire	LUM HPS RWY 50W	Active	50	65485-54003	S-14	CITY OF E PROVIDENCE
0005	000	2	SWAN	ST	6470	Overhead	Distribution	Luminaire	LUM HPS RWY 50W	Active	50	65485-54003	S-14	CITY OF E PROVIDENCE
0006	000	2	SWAN	ST	6470	Overhead	Distribution	Luminaire	LUM HPS RWY 50W TT	Temp Turn Off	50	65485-54003	S-14	CITY OF E PROVIDENCE
0007	000	2	SWAN	ST	6470	Overhead	Distribution	Luminaire	LUM HPS RWY 50W	Active	50	65485-54003	S-14	CITY OF E PROVIDENCE
0002	000	2	SWEET BRIAR	AVE	6475	Overhead	Distribution	Luminaire	LUM HPS RWY 50W	Active	50	65485-54003	S-14	CITY OF E PROVIDENCE
0004	000	2	SWEET BRIAR	AVE	6475	Overhead	Distribution	Luminaire	LUM HPS RWY 50W	Active	50	65485-54003	S-14	CITY OF E PROVIDENCE
0006	000	2	SWEET BRIAR	AVE	6475	Overhead	Distribution	Luminaire	LUM HPS RWY 50W TT	Temp Turn Off	50	65485-54003	S-14	CITY OF E PROVIDENCE
0007	000	2	SWEET BRIAR	AVE	6475	Overhead	Distribution	Luminaire	LUM HPS RWY 50W	Active	50	65485-54003	S-14	CITY OF E PROVIDENCE
0008	000	2	SWEET BRIAR	AVE	6475	Overhead	Distribution	Luminaire	LUM HPS RWY 50W	Active	50	65485-54003	S-14	CITY OF E PROVIDENCE
0010	000	2	SWEET BRIAR	AVE	6475	Overhead	Distribution	Luminaire	LUM HPS RWY 50W	Active	50	65485-54003	S-14	CITY OF E PROVIDENCE
0011	000	2	SWEET BRIAR	AVE	6475	Overhead	Distribution	Luminaire	LUM HPS RWY 50W	Active	50	65485-54003	S-14	CITY OF E PROVIDENCE
0012	000	2	SWEET BRIAR	AVE	6475	Overhead	Distribution	Luminaire	LUM HPS RWY 50W	Active	50	65485-54003	S-14	CITY OF E PROVIDENCE
0001	000	2	SYLVAN	RD	6480	Overhead	Distribution	Luminaire	LUM HPS RWY 50W TT	Temp Turn Off	50	65485-54003	S-14	CITY OF E PROVIDENCE
0002	000	2	SYLVAN	RD	6480	Overhead	Distribution	Luminaire	LUM HPS RWY 50W TT	Temp Turn Off	50	65485-54003	S-14	CITY OF E PROVIDENCE
0003	000	2	SYLVAN	RD	6480	Overhead	Distribution	Luminaire	LUM HPS RWY 50W	Active	50	65485-54003	S-14	CITY OF E PROVIDENCE
0004	000	2	SYLVAN	RD	6480	Overhead	Distribution	Luminaire	LUM HPS RWY 50W	Active	50	65485-54003	S-14	CITY OF E PROVIDENCE

Pole No	Pole Suffix	Light Sequ No	Street Name	Street Suffix	Ngrid Line No	Source Type	Pole Use	Component Type	Bill Print and Tariff Description	Billing Status	Lamp Wattage	Account No	Rate	Customer Name
0005	000	2	SYLVAN	RD	6480	Overhead	Distribution	Luminaire	LUM HPS RWY 50W TT	Temp Turn Off	50	65485-54003	S-14	CITY OF E PROVIDENCE
0001	000	2	TAB	AVE	6485	Overhead	Distribution	Luminaire	LUM HPS RWY 50W	Active	50	65485-54003	S-14	CITY OF E PROVIDENCE
0002	000	2	TAB	AVE	6485	Overhead	Distribution	Luminaire	LUM HPS RWY 50W	Active	50	65485-54003	S-14	CITY OF E PROVIDENCE
0004	000	2	TAB	AVE	6485	Overhead	Distribution	Luminaire	LUM HPS RWY 50W	Active	50	65485-54003	S-14	CITY OF E PROVIDENCE
0006	000	2	TAB	AVE	6485	Overhead	Distribution	Luminaire	LUM HPS RWY 50W	Active	50	65485-54003	S-14	CITY OF E PROVIDENCE
0001	000	2	TALLMAN	AVE	6490	Overhead	Distribution	Luminaire	LUM HPS RWY 50W	Active	50	65485-54003	S-14	CITY OF E PROVIDENCE
0003	000	2	TALLMAN	AVE	6490	Overhead	Distribution	Luminaire	LUM HPS RWY 50W	Active	50	65485-54003	S-14	CITY OF E PROVIDENCE
0004	000	2	TALLMAN	AVE	6490	Overhead	Distribution	Luminaire	LUM HPS RWY 50W TT	Temp Turn Off	50	65485-54003	S-14	CITY OF E PROVIDENCE
0005	000	2	TANGENT	ST	6495	Overhead	Distribution	Luminaire	LUM HPS RWY 50W	Active	50	65485-54003	S-14	CITY OF E PROVIDENCE
0007	000	1	TANGENT	ST	6495	Overhead	Distribution	Luminaire	LUM HPS RWY 50W	Active	50	65485-54003	S-14	CITY OF E PROVIDENCE
0003	000	2	TANGLEWOOD	DR	6496	Overhead	Distribution	Luminaire	LUM HPS RWY 50W	Active	50	65485-54003	S-14	CITY OF E PROVIDENCE
0004	000	2	TANGLEWOOD	DR	6496	Overhead	Distribution	Luminaire	LUM HPS RWY 50W TT	Temp Turn Off	50	65485-54003	S-14	CITY OF E PROVIDENCE
0005	000	2	TANGLEWOOD	DR	6496	Overhead	Distribution	Luminaire	LUM HPS RWY 50W	Active	50	65485-54003	S-14	CITY OF E PROVIDENCE
0006	000	2	TANGLEWOOD	DR	6496	Overhead	Distribution	Luminaire	LUM HPS RWY 50W TT	Temp Turn Off	50	65485-54003	S-14	CITY OF E PROVIDENCE
0007	000	2	TANGLEWOOD	DR	6496	Overhead	Distribution	Luminaire	LUM HPS RWY 50W	Active	50	65485-54003	S-14	CITY OF E PROVIDENCE
0008	000	2	TANGLEWOOD	DR	6496	Overhead	Distribution	Luminaire	LUM HPS RWY 50W TT	Temp Turn Off	50	65485-54003	S-14	CITY OF E PROVIDENCE
0009	000	2	TANGLEWOOD	DR	6496	Overhead	Distribution	Luminaire	LUM HPS RWY 50W	Active	50	65485-54003	S-14	CITY OF E PROVIDENCE
0010	000	2	TANGLEWOOD	DR	6496	Overhead	Distribution	Luminaire	LUM HPS RWY 50W	Active	50	65485-54003	S-14	CITY OF E PROVIDENCE
0023	000	2	TAUNTON	AVE	6500	Overhead	Distribution	Luminaire	LUM HPS RWY 250W TT	Temp Turn Off	250	65485-54003	S-14	CITY OF E PROVIDENCE
0025	050	1	TAUNTON	AVE	6500	Overhead	Distribution	Luminaire	LUM HPS RWY 100W	Active	100	65485-54003	S-14	CITY OF E PROVIDENCE
0026	000	2	TAUNTON	AVE	6500	Overhead	Distribution	Luminaire	LUM HPS RWY 250W	Active	250	65485-54003	S-14	CITY OF E PROVIDENCE
0028	000	1	TAUNTON	AVE	6500	Overhead	Distribution	Luminaire	LUM HPS RWY 100W	Active	100	65485-54003	S-14	CITY OF E PROVIDENCE
0030	000	1	TAUNTON	AVE	6500	Overhead	Distribution	Luminaire	LUM HPS RWY 100W	Active	100	65485-54003	S-14	CITY OF E PROVIDENCE
0032	050	1	TAUNTON	AVE	6500	Overhead	Distribution	Luminaire	LUM HPS RWY 100W	Active	100	65485-54003	S-14	CITY OF E PROVIDENCE
0033	000	1	TAUNTON	AVE	6500	Overhead	Distribution	Luminaire	LUM HPS RWY 100W	Active	100	65485-54003	S-14	CITY OF E PROVIDENCE
0037	000	2	TAUNTON	AVE	6500	Overhead	Distribution	Luminaire	LUM HPS RWY 250W TT	Temp Turn Off	250	65485-54003	S-14	CITY OF E PROVIDENCE
0038	000	2	TAUNTON	AVE	6500	Overhead	Distribution	Luminaire	LUM HPS RWY 250W TT	Temp Turn Off	250	65485-54003	S-14	CITY OF E PROVIDENCE
0038	050	1	TAUNTON	AVE	6500	Overhead	Distribution	Luminaire	LUM HPS RWY 100W	Active	100	65485-54003	S-14	CITY OF E PROVIDENCE
0040	050	1	TAUNTON	AVE	6500	Overhead	Distribution	Luminaire	LUM HPS RWY 100W	Active	100	65485-54003	S-14	CITY OF E PROVIDENCE
0042	000	2	TAUNTON	AVE	6500	Overhead	Distribution	Luminaire	LUM HPS RWY 250W	Active	250	65485-54003	S-14	CITY OF E PROVIDENCE
0044	000	1	TAUNTON	AVE	6500	Overhead	Distribution	Luminaire	LUM HPS RWY 100W	Active	100	65485-54003	S-14	CITY OF E PROVIDENCE
0047	000	1	TAUNTON	AVE	6500	Overhead	Distribution	Luminaire	LUM HPS RWY 100W	Active	100	90426-19008	S-14	CITY OF E PROVIDENCE
0048	000	1	TAUNTON	AVE	6500	Overhead	Distribution	Luminaire	LUM HPS RWY 100W	Active	100	90426-19008	S-14	CITY OF E PROVIDENCE
0049	000	1	TAUNTON	AVE	6500	Overhead	Distribution	Luminaire	LUM HPS RWY 100W	Active	100	90426-19008	S-14	CITY OF E PROVIDENCE
0051	000	1	TAUNTON	AVE	6500	Overhead	Distribution	Luminaire	LUM HPS RWY 100W	Active	100	90426-19008	S-14	CITY OF E PROVIDENCE
0052	000	1	TAUNTON	AVE	6500	Overhead	Distribution	Luminaire	LUM HPS RWY 100W	Active	100	65485-54003	S-14	CITY OF E PROVIDENCE
0054	000	1	TAUNTON	AVE	6500	Overhead	Distribution	Luminaire	LUM HPS RWY 100W	Active	100	65485-54003	S-14	CITY OF E PROVIDENCE
0055	000	2	TAUNTON	AVE	6500	Overhead	Distribution	Luminaire	LUM HPS RWY 250W TT	Temp Turn Off	250	65485-54003	S-14	CITY OF E PROVIDENCE
0057	000	1	TAUNTON	AVE	6500	Overhead	Distribution	Luminaire	LUM HPS RWY 100W	Active	100	65485-54003	S-14	CITY OF E PROVIDENCE
0059	000	2	TAUNTON	AVE	6500	Overhead	Distribution	Luminaire	LUM HPS RWY 250W TT	Temp Turn Off	250	65485-54003	S-14	CITY OF E PROVIDENCE
0061	000	2	TAUNTON	AVE	6500	Overhead	Distribution	Luminaire	LUM HPS RWY 100W	Active	100	65485-54003	S-14	CITY OF E PROVIDENCE
0065	000	1	TAUNTON	AVE	6500	Overhead	Distribution	Luminaire	LUM HPS RWY 100W	Active	100	65485-54003	S-14	CITY OF E PROVIDENCE
0067	000	2	TAUNTON	AVE	6500	Overhead	Distribution	Luminaire	LUM HPS RWY 250W TT	Temp Turn Off	250	65485-54003	S-14	CITY OF E PROVIDENCE
0068	050	1	TAUNTON	AVE	6500	Overhead	Distribution	Luminaire	LUM HPS RWY 100W	Active	100	65485-54003	S-14	CITY OF E PROVIDENCE
0069	000	1	TAUNTON	AVE	6500	Overhead	Distribution	Luminaire	LUM HPS RWY 100W	Active	100	65485-54003	S-14	CITY OF E PROVIDENCE
0071	000	2	TAUNTON	AVE	6500	Overhead	Distribution	Luminaire	LUM HPS RWY 250W TT	Temp Turn Off	250	65485-54003	S-14	CITY OF E PROVIDENCE
0072	050	1	TAUNTON	AVE	6500	Overhead	Distribution	Luminaire	LUM HPS RWY 100W	Active	100	65485-54003	S-14	CITY OF E PROVIDENCE
0078	000	1	TAUNTON	AVE	6500	Overhead	Distribution	Luminaire	LUM HPS RWY 100W	Active	100	65485-54003	S-14	CITY OF E PROVIDENCE
0080	050	2	TAUNTON	AVE	6500	Overhead	Distribution	Luminaire	LUM HPS RWY 400W TT	Temp Turn Off	400	65485-54003	S-14	CITY OF E PROVIDENCE
0082	000	2	TAUNTON	AVE	6500	Overhead	Distribution	Luminaire	LUM HPS RWY 400W TT	Temp Turn Off	400	65485-54003	S-14	CITY OF E PROVIDENCE
0082	050	1	TAUNTON	AVE	6500	Overhead	Distribution	Luminaire	LUM HPS RWY 100W	Active	100	65485-54003	S-14	CITY OF E PROVIDENCE
0083	000	2	TAUNTON	AVE	6500	Overhead	Distribution	Luminaire	LUM HPS RWY 250W TT	Temp Turn Off	250	65485-54003	S-14	CITY OF E PROVIDENCE
0084	000	0	TAUNTON	AVE	6500	Underground	Street Lighting	Pole	POLE METAL W/BASE	Active	0	65485-54003	S-14	CITY OF E PROVIDENCE
0084	000	1	TAUNTON	AVE	6500	Underground	Street Lighting	Luminaire	LUM HPS RWY 100W	Active	100	65485-54003	S-14	CITY OF E PROVIDENCE
0085	000	0	TAUNTON	AVE	6500	Underground	Street Lighting	Pole	POLE METAL W/BASE	Active	0	65485-54003	S-14	CITY OF E PROVIDENCE

Pole No	Pole Suffix	Light Sequ No	Street Name	Street Suffix	Ngrid Line No	Source Type	Pole Use	Component Type	Bill Print and Tariff Description	Billing Status	Lamp Wattage	Account No	Rate	Customer Name
0085	000	2	TAUNTON	AVE	6500	Underground	Street Lighting	Luminaire	LUM HPS RWY 250W	Active	250	65485-54003	S-14	CITY OF E PROVIDENCE
0087	000	1	TAUNTON	AVE	6500	Overhead	Distribution	Luminaire	LUM HPS RWY 250W	Inactive	250	65485-54003	S-14	CITY OF E PROVIDENCE
0090	000	1	TAUNTON	AVE	6500	Overhead	Distribution	Luminaire	LUM HPS RWY 100W	Active	100	65485-54003	S-14	CITY OF E PROVIDENCE
0091	000	1	TAUNTON	AVE	6500	Overhead	Distribution	Luminaire	LUM HPS RWY 100W	Active	100	65485-54003	S-14	CITY OF E PROVIDENCE
0094	000	2	TAUNTON	AVE	6500	Overhead	Distribution	Luminaire	LUM HPS RWY 100W	Active	100	65485-54003	S-14	CITY OF E PROVIDENCE
0095	000	2	TAUNTON	AVE	6500	Overhead	Distribution	Luminaire	LUM HPS RWY 250W TT	Temp Turn Off	250	65485-54003	S-14	CITY OF E PROVIDENCE
0098	000	1	TAUNTON	AVE	6500	Overhead	Distribution	Luminaire	LUM HPS RWY 100W	Active	100	65485-54003	S-14	CITY OF E PROVIDENCE
0099	050	1	TAUNTON	AVE	6500	Overhead	Distribution	Luminaire	LUM HPS RWY 100W	Active	100	65485-54003	S-14	CITY OF E PROVIDENCE
0102	000	1	TAUNTON	AVE	6500	Overhead	Distribution	Luminaire	LUM HPS RWY 250W	Inactive	250	65485-54003	S-14	CITY OF E PROVIDENCE
0103	000	2	TAUNTON	AVE	6500	Overhead	Distribution	Luminaire	LUM HPS RWY 250W TT	Temp Turn Off	250	65485-54003	S-14	CITY OF E PROVIDENCE
0107	000	1	TAUNTON	AVE	6500	Overhead	Distribution	Luminaire	LUM HPS RWY 100W	Active	100	65485-54003	S-14	CITY OF E PROVIDENCE
0110	000	1	TAUNTON	AVE	6500	Overhead	Distribution	Luminaire	LUM HPS RWY 100W	Inactive	100	65485-54003	S-14	CITY OF E PROVIDENCE
0111	000	1	TAUNTON	AVE	6500	Overhead	Distribution	Luminaire	LUM HPS RWY 100W	Active	100	65485-54003	S-14	CITY OF E PROVIDENCE
0114	000	1	TAUNTON	AVE	6500	Overhead	Distribution	Luminaire	LUM HPS RWY 100W	Active	100	65485-54003	S-14	CITY OF E PROVIDENCE
0115	000	2	TAUNTON	AVE	6500	Overhead	Distribution	Luminaire	LUM HPS RWY 100W	Active	100	65485-54003	S-14	CITY OF E PROVIDENCE
0116	000	1	TAUNTON	AVE	6500	Overhead	Distribution	Luminaire	LUM HPS RWY 100W	Active	100	65485-54003	S-14	CITY OF E PROVIDENCE
0119	000	2	TAUNTON	AVE	6500	Overhead	Distribution	Luminaire	LUM HPS RWY 250W TT	Temp Turn Off	250	65485-54003	S-14	CITY OF E PROVIDENCE
0120	000	1	TAUNTON	AVE	6500	Overhead	Distribution	Luminaire	LUM HPS RWY 100W	Active	100	65485-54003	S-14	CITY OF E PROVIDENCE
0121	000	2	TAUNTON	AVE	6500	Overhead	Distribution	Luminaire	LUM HPS RWY 250W TT	Temp Turn Off	250	65485-54003	S-14	CITY OF E PROVIDENCE
0123	000	1	TAUNTON	AVE	6500	Overhead	Distribution	Luminaire	LUM HPS RWY 100W	Active	100	65485-54003	S-14	CITY OF E PROVIDENCE
0129	000	2	TAUNTON	AVE	6500	Overhead	Distribution	Luminaire	LUM HPS RWY 250W TT	Temp Turn Off	250	65485-54003	S-14	CITY OF E PROVIDENCE
0129	084	1	TAUNTON	AVE	6500	Overhead	Distribution	Luminaire	LUM HPS RWY 100W	Active	100	65485-54003	S-14	CITY OF E PROVIDENCE
0131	000	1	TAUNTON	AVE	6500	Overhead	Distribution	Luminaire	LUM HPS RWY 100W	Active	100	65485-54003	S-14	CITY OF E PROVIDENCE
0132	000	1	TAUNTON	AVE	6500	Overhead	Distribution	Luminaire	LUM HPS RWY 100W	Active	100	65485-54003	S-14	CITY OF E PROVIDENCE
0135	000	2	TAUNTON	AVE	6500	Overhead	Distribution	Luminaire	LUM HPS RWY 250W TT	Temp Turn Off	250	65485-54003	S-14	CITY OF E PROVIDENCE
0137	000	1	TAUNTON	AVE	6500	Overhead	Distribution	Luminaire	LUM HPS RWY 100W	Active	100	65485-54003	S-14	CITY OF E PROVIDENCE
0139	050	2	TAUNTON	AVE	6500	Overhead	Distribution	Luminaire	LUM HPS RWY 250W TT	Temp Turn Off	250	65485-54003	S-14	CITY OF E PROVIDENCE
0141	000	1	TAUNTON	AVE	6500	Overhead	Distribution	Luminaire	LUM HPS RWY 100W	Active	100	65485-54003	S-14	CITY OF E PROVIDENCE
0143	000	1	TAUNTON	AVE	6500	Overhead	Distribution	Luminaire	LUM HPS RWY 100W	Active	100	65485-54003	S-14	CITY OF E PROVIDENCE
0146	000	2	TAUNTON	AVE	6500	Overhead	Distribution	Luminaire	LUM HPS RWY 250W TT	Temp Turn Off	250	65485-54003	S-14	CITY OF E PROVIDENCE
0151	000	1	TAUNTON	AVE	6500	Overhead	Distribution	Luminaire	LUM HPS RWY 100W	Active	100	65485-54003	S-14	CITY OF E PROVIDENCE
0156	000	1	TAUNTON	AVE	6500	Overhead	Distribution	Luminaire	LUM HPS RWY 100W	Active	100	65485-54003	S-14	CITY OF E PROVIDENCE
0157	000	2	TAUNTON	AVE	6500	Overhead	Distribution	Luminaire	LUM HPS RWY 250W TT	Temp Turn Off	250	65485-54003	S-14	CITY OF E PROVIDENCE
0158	000	1	TAUNTON	AVE	6500	Overhead	Distribution	Luminaire	LUM HPS RWY 100W	Active	100	65485-54003	S-14	CITY OF E PROVIDENCE
0161	000	2	TAUNTON	AVE	6500	Overhead	Distribution	Luminaire	LUM HPS RWY 250W TT	Temp Turn Off	250	65485-54003	S-14	CITY OF E PROVIDENCE
0161	001	1	TAUNTON	AVE	6500	Overhead	Distribution	Luminaire	LUM HPS RWY 250W	Inactive	250	65485-54003	S-14	CITY OF E PROVIDENCE
0163	000	2	TAUNTON	AVE	6500	Overhead	Distribution	Luminaire	LUM HPS RWY 250W TT	Temp Turn Off	250	65485-54003	S-14	CITY OF E PROVIDENCE
0165	000	1	TAUNTON	AVE	6500	Overhead	Distribution	Luminaire	LUM HPS RWY 100W	Active	100	65485-54003	S-14	CITY OF E PROVIDENCE
0169	000	1	TAUNTON	AVE	6500	Overhead	Distribution	Luminaire	LUM HPS RWY 100W	Active	100	65485-54003	S-14	CITY OF E PROVIDENCE
0173	000	1	TAUNTON	AVE	6500	Overhead	Distribution	Luminaire	LUM HPS RWY 100W	Active	100	65485-54003	S-14	CITY OF E PROVIDENCE
0177	000	1	TAUNTON	AVE	6500	Overhead	Distribution	Luminaire	LUM HPS RWY 100W	Active	100	65485-54003	S-14	CITY OF E PROVIDENCE
0181	000	1	TAUNTON	AVE	6500	Overhead	Distribution	Luminaire	LUM HPS RWY 100W	Active	100	65485-54003	S-14	CITY OF E PROVIDENCE
0189	000	1	TAUNTON	AVE	6500	Overhead	Distribution	Luminaire	LUM HPS RWY 100W	Active	100	65485-54003	S-14	CITY OF E PROVIDENCE
0001	000	2	TAYLOR	AVE	6507	Overhead	Distribution	Luminaire	LUM HPS RWY 50W	Active	50	65485-54003	S-14	CITY OF E PROVIDENCE
0003	000	2	TAYLOR	AVE	6507	Overhead	Distribution	Luminaire	LUM HPS RWY 50W	Active	50	65485-54003	S-14	CITY OF E PROVIDENCE
0005	000	2	TAYLOR	AVE	6507	Overhead	Distribution	Luminaire	LUM HPS RWY 50W	Active	50	65485-54003	S-14	CITY OF E PROVIDENCE
0001	000	2	TAYLOR	DR	6505	Overhead	Distribution	Luminaire	LUM HPS RWY 50W TT	Temp Turn Off	50	65485-54003	S-14	CITY OF E PROVIDENCE
0002	000	2	TAYLOR	DR	6505	Overhead	Distribution	Luminaire	LUM HPS RWY 50W TT	Temp Turn Off	50	65485-54003	S-14	CITY OF E PROVIDENCE
0003	000	2	TAYLOR	DR	6505	Overhead	Distribution	Luminaire	LUM HPS RWY 50W	Active	50	65485-54003	S-14	CITY OF E PROVIDENCE
0004	000	2	TAYLOR	DR	6505	Overhead	Distribution	Luminaire	LUM HPS RWY 50W TT	Temp Turn Off	50	65485-54003	S-14	CITY OF E PROVIDENCE
0005	000	2	TAYLOR	DR	6505	Overhead	Distribution	Luminaire	LUM HPS RWY 50W	Active	50	65485-54003	S-14	CITY OF E PROVIDENCE
0006	000	2	TAYLOR	DR	6505	Overhead	Distribution	Luminaire	LUM HPS RWY 50W TT	Temp Turn Off	50	65485-54003	S-14	CITY OF E PROVIDENCE
0007	000	2	TAYLOR	DR	6505	Overhead	Distribution	Luminaire	LUM HPS RWY 50W	Active	50	65485-54003	S-14	CITY OF E PROVIDENCE
0007	050	2	TAYLOR	DR	6505	Overhead	Distribution	Luminaire	LUM HPS RWY 50W TT	Temp Turn Off	50	65485-54003	S-14	CITY OF E PROVIDENCE
0008	000	2	TAYLOR	DR	6505	Overhead	Distribution	Luminaire	LUM HPS RWY 50W	Active	50	65485-54003	S-14	CITY OF E PROVIDENCE

Pole No	Pole Suffix	Light Sequ No	Street Name	Street Suffix	Ngrid Line No	Source Type	Pole Use	Component Type	Bill Print and Tariff Description	Billing Status	Lamp Wattage	Account No	Rate	Customer Name
0009	000	2	TAYLOR	DR	6505	Overhead	Distribution	Luminaire	LUM HPS RWY 50W TT	Temp Turn Off	50	65485-54003	S-14	CITY OF E PROVIDENCE
0010	000	2	TAYLOR	DR	6505	Overhead	Distribution	Luminaire	LUM HPS RWY 50W	Active	50	65485-54003	S-14	CITY OF E PROVIDENCE
0011	000	1	TAYLOR	DR	6505	Overhead	Distribution	Luminaire	LUM HPS RWY 50W	Active	50	65485-54003	S-14	CITY OF E PROVIDENCE
0001	000	2	TEMPLE	ST	6510	Overhead	Distribution	Luminaire	LUM HPS RWY 50W	Active	50	65485-54003	S-14	CITY OF E PROVIDENCE
0002	000	2	TEMPLE	ST	6510	Overhead	Distribution	Luminaire	LUM HPS RWY 50W TT	Temp Turn Off	50	65485-54003	S-14	CITY OF E PROVIDENCE
0003	000	2	TEMPLE	ST	6510	Overhead	Distribution	Luminaire	LUM HPS RWY 50W	Active	50	90426-19008	S-14	CITY OF E PROVIDENCE
9033	000	2	TENTH	ST	6515	Overhead	Distribution	Luminaire	LUM HPS RWY 50W TT	Temp Turn Off	50	65485-54003	S-14	CITY OF E PROVIDENCE
9035	000	2	TENTH	ST	6515	Overhead	Distribution	Luminaire	LUM HPS RWY 50W	Active	50	65485-54003	S-14	CITY OF E PROVIDENCE
9036	000	2	TENTH	ST	6515	Overhead	Distribution	Luminaire	LUM HPS RWY 50W TT	Temp Turn Off	50	65485-54003	S-14	CITY OF E PROVIDENCE
9038	000	2	TENTH	ST	6515	Overhead	Distribution	Luminaire	LUM HPS RWY 50W	Active	50	65485-54003	S-14	CITY OF E PROVIDENCE
0001	000	1	TEOFILO BRAGA	WAY	1230	Overhead	Distribution	Luminaire	LUM HPS RWY 50W	Active	50	65485-54003	S-14	CITY OF E PROVIDENCE
0017	000	2	TERRACE	AVE	6520	Overhead	Distribution	Luminaire	LUM HPS RWY 50W	Active	50	90426-19008	S-14	CITY OF E PROVIDENCE
0018	000	2	TERRACE	AVE	6520	Overhead	Distribution	Luminaire	LUM HPS RWY 50W	Active	50	90426-19008	S-14	CITY OF E PROVIDENCE
0019	000	2	TERRACE	AVE	6520	Overhead	Distribution	Luminaire	LUM HPS RWY 50W	Active	50	90426-19008	S-14	CITY OF E PROVIDENCE
0021	000	2	TERRACE	AVE	6520	Overhead	Distribution	Luminaire	LUM HPS RWY 50W	Active	50	90426-19008	S-14	CITY OF E PROVIDENCE
0022	000	2	TERRACE	AVE	6520	Overhead	Distribution	Luminaire	LUM HPS RWY 50W TT	Temp Turn Off	50	90426-19008	S-14	CITY OF E PROVIDENCE
0023	000	2	TERRACE	AVE	6520	Overhead	Distribution	Luminaire	LUM HPS RWY 50W	Active	50	65485-54003	S-14	CITY OF E PROVIDENCE
0024	000	2	TERRACE	AVE	6520	Overhead	Distribution	Luminaire	LUM HPS RWY 50W TT	Temp Turn Off	50	90426-19008	S-14	CITY OF E PROVIDENCE
0025	000	2	TERRACE	AVE	6520	Overhead	Distribution	Luminaire	LUM HPS RWY 50W	Active	50	90426-19008	S-14	CITY OF E PROVIDENCE
0101	000	2	TERRACE	AVE	6520	Overhead	Distribution	Luminaire	LUM HPS RWY 50W	Active	50	90426-19008	S-14	CITY OF E PROVIDENCE
0107	000	2	TERRACE	AVE	6520	Overhead	Distribution	Luminaire	LUM HPS RWY 50W	Active	50	90426-19008	S-14	CITY OF E PROVIDENCE
0108	000	2	TERRACE	AVE	6520	Overhead	Distribution	Luminaire	LUM HPS RWY 50W TT	Temp Turn Off	50	90426-19008	S-14	CITY OF E PROVIDENCE
0110	000	2	TERRACE	AVE	6520	Overhead	Distribution	Luminaire	LUM HPS RWY 50W	Active	50	90426-19008	S-14	CITY OF E PROVIDENCE
0111	000	2	TERRACE	AVE	6520	Overhead	Distribution	Luminaire	LUM HPS RWY 50W TT	Temp Turn Off	50	90426-19008	S-14	CITY OF E PROVIDENCE
0113	000	2	TERRACE	AVE	6520	Overhead	Distribution	Luminaire	LUM HPS RWY 50W	Active	50	90426-19008	S-14	CITY OF E PROVIDENCE
0114	000	2	TERRACE	AVE	6520	Overhead	Distribution	Luminaire	LUM HPS RWY 50W TT	Temp Turn Off	50	90426-19008	S-14	CITY OF E PROVIDENCE
0115	000	1	TERRACE	AVE	6520	Overhead	Distribution	Luminaire	LUM HPS RWY 100W	Active	100	90426-19008	S-14	CITY OF E PROVIDENCE
0116	000	2	TERRACE	AVE	6520	Overhead	Distribution	Luminaire	LUM HPS RWY 50W	Active	50	90426-19008	S-14	CITY OF E PROVIDENCE
0117	000	2	TERRACE	AVE	6520	Overhead	Distribution	Luminaire	LUM HPS RWY 50W TT	Temp Turn Off	50	90426-19008	S-14	CITY OF E PROVIDENCE
0118	000	2	TERRACE	AVE	6520	Overhead	Distribution	Luminaire	LUM HPS RWY 50W	Active	50	90426-19008	S-14	CITY OF E PROVIDENCE
0120	000	2	TERRACE	AVE	6520	Overhead	Distribution	Luminaire	LUM HPS RWY 50W	Active	50	90426-19008	S-14	CITY OF E PROVIDENCE
0121	000	2	TERRACE	AVE	6520	Overhead	Distribution	Luminaire	LUM HPS RWY 50W	Active	50	90426-19008	S-14	CITY OF E PROVIDENCE
0122	000	2	TERRACE	AVE	6520	Overhead	Distribution	Luminaire	LUM HPS RWY 50W	Active	50	90426-19008	S-14	CITY OF E PROVIDENCE
0124	000	2	TERRACE	AVE	6520	Overhead	Distribution	Luminaire	LUM HPS RWY 50W	Active	50	90426-19008	S-14	CITY OF E PROVIDENCE
0002	000	2	THATCHER	ST	6525	Overhead	Distribution	Luminaire	LUM HPS RWY 50W	Active	50	65485-54003	S-14	CITY OF E PROVIDENCE
0004	000	2	THATCHER	ST	6525	Overhead	Distribution	Luminaire	LUM HPS RWY 50W	Red Cap Perm	50	65485-54003	S-14	CITY OF E PROVIDENCE
0005	000	2	THATCHER	ST	6525	Overhead	Distribution	Luminaire	LUM HPS RWY 50W	Active	50	65485-54003	S-14	CITY OF E PROVIDENCE
0007	000	2	THATCHER	ST	6525	Overhead	Distribution	Luminaire	LUM HPS RWY 50W	Active	50	65485-54003	S-14	CITY OF E PROVIDENCE
0011	000	2	THATCHER	ST	6525	Overhead	Distribution	Luminaire	LUM HPS RWY 50W	Active	50	65485-54003	S-14	CITY OF E PROVIDENCE
0013	000	2	THATCHER	ST	6525	Overhead	Distribution	Luminaire	LUM HPS RWY 50W	Active	50	65485-54003	S-14	CITY OF E PROVIDENCE
0015	000	2	THATCHER	ST	6525	Overhead	Distribution	Luminaire	LUM HPS RWY 50W	Active	50	65485-54003	S-14	CITY OF E PROVIDENCE
0016	000	2	THATCHER	ST	6525	Overhead	Distribution	Luminaire	LUM HPS RWY 50W TT	Temp Turn Off	50	65485-54003	S-14	CITY OF E PROVIDENCE
0018	000	2	THATCHER	ST	6525	Overhead	Distribution	Luminaire	LUM HPS RWY 50W	Active	50	65485-54003	S-14	CITY OF E PROVIDENCE
0020	000	2	THATCHER	ST	6525	Overhead	Distribution	Luminaire	LUM HPS RWY 50W	Active	50	65485-54003	S-14	CITY OF E PROVIDENCE
0021	000	2	THATCHER	ST	6525	Overhead	Distribution	Luminaire	LUM HPS RWY 50W TT	Temp Turn Off	50	65485-54003	S-14	CITY OF E PROVIDENCE
0022	000	2	THATCHER	ST	6525	Overhead	Distribution	Luminaire	LUM HPS RWY 50W	Active	50	65485-54003	S-14	CITY OF E PROVIDENCE
0024	000	1	THATCHER	ST	6525	Overhead	Distribution	Luminaire	LUM HPS RWY 150W	Active	150	65485-54003	S-14	CITY OF E PROVIDENCE
0025	000	2	THATCHER	ST	6525	Overhead	Distribution	Luminaire	LUM HPS RWY 50W	Active	50	65485-54003	S-14	CITY OF E PROVIDENCE
0001	000	2	THERESA	ST	6530	Overhead	Distribution	Luminaire	LUM HPS RWY 50W	Active	50	65485-54003	S-14	CITY OF E PROVIDENCE
0002	000	2	THURSTON	ST	6535	Overhead	Distribution	Luminaire	LUM HPS RWY 50W TT	Temp Turn Off	50	65485-54003	S-14	CITY OF E PROVIDENCE
0003	000	2	THURSTON	ST	6535	Overhead	Distribution	Luminaire	LUM HPS RWY 50W	Active	50	65485-54003	S-14	CITY OF E PROVIDENCE
0004	000	2	THURSTON	ST	6535	Overhead	Distribution	Luminaire	LUM HPS RWY 50W	Active	50	65485-54003	S-14	CITY OF E PROVIDENCE
0006	000	2	THURSTON	ST	6535	Overhead	Distribution	Luminaire	LUM HPS RWY 50W	Active	50	65485-54003	S-14	CITY OF E PROVIDENCE
0008	000	2	THURSTON	ST	6535	Overhead	Distribution	Luminaire	LUM HPS RWY 50W	Active	50	65485-54003	S-14	CITY OF E PROVIDENCE
0010	000	2	THURSTON	ST	6535	Overhead	Distribution	Luminaire	LUM HPS RWY 50W TT	Temp Turn Off	50	65485-54003	S-14	CITY OF E PROVIDENCE

Pole No	Pole Suffix	Light Sequ No	Street Name	Street Suffix	Ngrid Line No	Source Type	Pole Use	Component Type	Bill Print and Tariff Description	Billing Status	Lamp Wattage	Account No	Rate	Customer Name
0011	000	1	THURSTON	ST	6535	Overhead	Distribution	Luminaire	LUM HPS RWY 100W	Inactive	100	65485-54003	S-14	CITY OF E PROVIDENCE
0012	000	2	THURSTON	ST	6535	Overhead	Distribution	Luminaire	LUM HPS RWY 50W TT	Temp Turn Off	50	65485-54003	S-14	CITY OF E PROVIDENCE
0013	000	2	THURSTON	ST	6535	Overhead	Distribution	Luminaire	LUM HPS RWY 50W TT	Temp Turn Off	50	65485-54003	S-14	CITY OF E PROVIDENCE
0014	000	2	THURSTON	ST	6535	Overhead	Distribution	Luminaire	LUM HPS RWY 50W	Active	50	65485-54003	S-14	CITY OF E PROVIDENCE
0015	000	2	THURSTON	ST	6535	Overhead	Distribution	Luminaire	LUM HPS RWY 50W TT	Temp Turn Off	50	65485-54003	S-14	CITY OF E PROVIDENCE
0016	000	2	THURSTON	ST	6535	Overhead	Distribution	Luminaire	LUM HPS RWY 50W	Active	50	65485-54003	S-14	CITY OF E PROVIDENCE
0017	000	2	THURSTON	ST	6535	Overhead	Distribution	Luminaire	LUM HPS RWY 50W TT	Temp Turn Off	50	65485-54003	S-14	CITY OF E PROVIDENCE
0018	000	2	THURSTON	ST	6535	Overhead	Distribution	Luminaire	LUM HPS RWY 50W	Active	50	65485-54003	S-14	CITY OF E PROVIDENCE
0002	000	2	TIMBERLAND	DR	6540	Overhead	Distribution	Luminaire	LUM HPS RWY 50W	Active	50	65485-54003	S-14	CITY OF E PROVIDENCE
0004	000	2	TIMBERLAND	DR	6540	Overhead	Distribution	Luminaire	LUM HPS RWY 50W	Active	50	65485-54003	S-14	CITY OF E PROVIDENCE
0005	000	2	TIMBERLAND	DR	6540	Overhead	Distribution	Luminaire	LUM HPS RWY 50W	Active	50	65485-54003	S-14	CITY OF E PROVIDENCE
0006	000	2	TIMBERLAND	DR	6540	Overhead	Distribution	Luminaire	LUM HPS RWY 50W	Active	50	65485-54003	S-14	CITY OF E PROVIDENCE
0007	000	2	TIMBERLAND	DR	6540	Overhead	Distribution	Luminaire	LUM HPS RWY 50W TT	Temp Turn Off	50	65485-54003	S-14	CITY OF E PROVIDENCE
0009	000	2	TIMBERLAND	DR	6540	Overhead	Distribution	Luminaire	LUM HPS RWY 50W	Active	50	65485-54003	S-14	CITY OF E PROVIDENCE
0005	000	2	TONER	ST	6550	Overhead	Distribution	Luminaire	LUM HPS RWY 50W TT	Temp Turn Off	50	65485-54003	S-14	CITY OF E PROVIDENCE
0006	000	2	TONER	ST	6550	Overhead	Distribution	Luminaire	LUM HPS RWY 50W	Active	50	65485-54003	S-14	CITY OF E PROVIDENCE
0002	000	2	TOWER	AVE	6555	Overhead	Distribution	Luminaire	LUM HPS RWY 50W	Active	50	65485-54003	S-14	CITY OF E PROVIDENCE
0004	000	2	TOWER	AVE	6555	Overhead	Distribution	Luminaire	LUM HPS RWY 50W	Active	50	65485-54003	S-14	CITY OF E PROVIDENCE
0006	000	2	TOWER	AVE	6555	Overhead	Distribution	Luminaire	LUM HPS RWY 50W	Active	50	65485-54003	S-14	CITY OF E PROVIDENCE
0008	000	2	TOWER	AVE	6555	Overhead	Distribution	Luminaire	LUM HPS RWY 50W	Active	50	65485-54003	S-14	CITY OF E PROVIDENCE
0002	000	2	TOWNHOUSE	RD	6557	Overhead	Distribution	Luminaire	LUM HPS RWY 50W TT	Temp Turn Off	50	90426-19008	S-14	CITY OF E PROVIDENCE
0005	000	2	TOWNHOUSE	RD	6557	Overhead	Distribution	Luminaire	LUM HPS RWY 50W	Active	50	90426-19008	S-14	CITY OF E PROVIDENCE
0001	000	2	TRIPPS	LN	6560	Overhead	Distribution	Luminaire	LUM HPS RWY 50W TT	Temp Turn Off	50	65485-54003	S-14	CITY OF E PROVIDENCE
0002	000	2	TRIPPS	LN	6560	Overhead	Distribution	Luminaire	LUM HPS RWY 50W	Active	50	65485-54003	S-14	CITY OF E PROVIDENCE
0003	000	2	TRIPPS	LN	6560	Overhead	Distribution	Luminaire	LUM HPS RWY 50W TT	Temp Turn Off	50	65485-54003	S-14	CITY OF E PROVIDENCE
0004	000	2	TRIPPS	LN	6560	Overhead	Distribution	Luminaire	LUM HPS RWY 50W	Active	50	65485-54003	S-14	CITY OF E PROVIDENCE
0005	000	2	TRIPPS	LN	6560	Overhead	Distribution	Luminaire	LUM HPS RWY 50W TT	Temp Turn Off	50	65485-54003	S-14	CITY OF E PROVIDENCE
0006	000	2	TRIPPS	LN	6560	Overhead	Distribution	Luminaire	LUM HPS RWY 50W	Active	50	65485-54003	S-14	CITY OF E PROVIDENCE
0007	000	2	TRIPPS	LN	6560	Overhead	Distribution	Luminaire	LUM HPS RWY 50W TT	Temp Turn Off	50	65485-54003	S-14	CITY OF E PROVIDENCE
0009	000	2	TRIPPS	LN	6560	Overhead	Distribution	Luminaire	LUM HPS RWY 50W	Active	50	65485-54003	S-14	CITY OF E PROVIDENCE
0010	000	2	TRIPPS	LN	6560	Overhead	Distribution	Luminaire	LUM HPS RWY 50W TT	Temp Turn Off	50	65485-54003	S-14	CITY OF E PROVIDENCE
0011	000	2	TRIPPS	LN	6560	Overhead	Distribution	Luminaire	LUM HPS RWY 50W	Active	50	65485-54003	S-14	CITY OF E PROVIDENCE
0012	000	2	TRIPPS	LN	6560	Overhead	Distribution	Luminaire	LUM HPS RWY 50W	Active	50	65485-54003	S-14	CITY OF E PROVIDENCE
0097	000	2	TROY	ST	8024	Overhead	Distribution	Luminaire	LUM HPS RWY 100W	Active	100	65485-54003	S-14	CITY OF E PROVIDENCE
0001	000	2	TRYON	AVE	6570	Overhead	Distribution	Luminaire	LUM HPS RWY 50W	Active	50	65485-54003	S-14	CITY OF E PROVIDENCE
0003	000	2	TRYON	AVE	6570	Overhead	Distribution	Luminaire	LUM HPS RWY 50W	Active	50	65485-54003	S-14	CITY OF E PROVIDENCE
0004	000	2	TRYON	AVE	6570	Overhead	Distribution	Luminaire	LUM HPS RWY 50W TT	Temp Turn Off	50	90426-19008	S-14	CITY OF E PROVIDENCE
0005	000	2	TRYON	AVE	6570	Overhead	Distribution	Luminaire	LUM HPS RWY 50W	Active	50	65485-54003	S-14	CITY OF E PROVIDENCE
0006	000	2	TRYON	AVE	6570	Overhead	Distribution	Luminaire	LUM HPS RWY 50W	Active	50	90426-19008	S-14	CITY OF E PROVIDENCE
0007	000	2	TRYON	AVE	6570	Overhead	Distribution	Luminaire	LUM HPS RWY 50W	Active	50	65485-54003	S-14	CITY OF E PROVIDENCE
0008	000	2	TRYON	AVE	6570	Overhead	Distribution	Luminaire	LUM HPS RWY 50W	Active	50	90426-19008	S-14	CITY OF E PROVIDENCE
0009	000	2	TRYON	AVE	6570	Overhead	Distribution	Luminaire	LUM HPS RWY 50W	Active	50	65485-54003	S-14	CITY OF E PROVIDENCE
0010	000	2	TRYON	AVE	6570	Overhead	Distribution	Luminaire	LUM HPS RWY 50W	Active	50	65485-54003	S-14	CITY OF E PROVIDENCE
0012	000	2	TRYON	AVE	6570	Overhead	Distribution	Luminaire	LUM HPS RWY 50W	Active	50	65485-54003	S-14	CITY OF E PROVIDENCE
0002	000	1	TURNER	AVE	6575	Overhead	Distribution	Luminaire	LUM HPS RWY 50W	Active	50	65485-54003	S-14	CITY OF E PROVIDENCE
0003	000	1	TURNER	AVE	6575	Overhead	Distribution	Luminaire	LUM HPS RWY 50W	Active	50	65485-54003	S-14	CITY OF E PROVIDENCE
0004	000	1	TURNER	AVE	6575	Overhead	Distribution	Luminaire	LUM HPS RWY 50W	Active	50	65485-54003	S-14	CITY OF E PROVIDENCE
0005	000	2	TURNER	AVE	6575	Overhead	Distribution	Luminaire	LUM HPS RWY 50W	Active	50	65485-54003	S-14	CITY OF E PROVIDENCE
0006	000	2	TURNER	AVE	6575	Overhead	Distribution	Luminaire	LUM HPS RWY 50W	Active	50	65485-54003	S-14	CITY OF E PROVIDENCE
0007	000	1	TURNER	AVE	6575	Overhead	Distribution	Luminaire	LUM HPS RWY 50W	Active	50	65485-54003	S-14	CITY OF E PROVIDENCE
0008	000	2	TURNER	AVE	6575	Overhead	Distribution	Luminaire	LUM HPS RWY 100W	Active	100	65485-54003	S-14	CITY OF E PROVIDENCE
0009	000	1	TURNER	AVE	6575	Overhead	Distribution	Luminaire	LUM HPS RWY 50W	Active	50	65485-54003	S-14	CITY OF E PROVIDENCE
0010	000	2	TURNER	AVE	6575	Overhead	Distribution	Luminaire	LUM HPS RWY 100W TT	Temp Turn Off	100	65485-54003	S-14	CITY OF E PROVIDENCE
0011	000	1	TURNER	AVE	6575	Overhead	Distribution	Luminaire	LUM HPS RWY 50W	Active	50	65485-54003	S-14	CITY OF E PROVIDENCE
0012	000	2	TURNER	AVE	6575	Overhead	Distribution	Luminaire	LUM HPS RWY 100W TT	Temp Turn Off	100	65485-54003	S-14	CITY OF E PROVIDENCE

Pole No	Pole Suffix	Light Sequ No	Street Name	Street Suffix	Ngrid Line No	Source Type	Pole Use	Component Type	Bill Print and Tariff Description	Billing Status	Lamp Wattage	Account No	Rate	Customer Name
0013	000	2	TURNER	AVE	6575	Overhead	Distribution	Luminaire	LUM HPS RWY 50W	Active	50	65485-54003	S-14	CITY OF E PROVIDENCE
0014	000	2	TURNER	AVE	6575	Overhead	Distribution	Luminaire	LUM HPS RWY 100W TT	Temp Turn Off	100	65485-54003	S-14	CITY OF E PROVIDENCE
0015	000	1	TURNER	AVE	6575	Overhead	Distribution	Luminaire	LUM HPS RWY 50W	Active	50	65485-54003	S-14	CITY OF E PROVIDENCE
0015	050	2	TURNER	AVE	6575	Overhead	Distribution	Luminaire	LUM HPS RWY 100W TT	Temp Turn Off	100	65485-54003	S-14	CITY OF E PROVIDENCE
0016	000	2	TURNER	AVE	6575	Overhead	Distribution	Luminaire	LUM HPS RWY 100W TT	Temp Turn Off	100	65485-54003	S-14	CITY OF E PROVIDENCE
0018	000	1	TURNER	AVE	6575	Overhead	Distribution	Luminaire	LUM HPS RWY 50W	Active	50	65485-54003	S-14	CITY OF E PROVIDENCE
0003	000	2	UNION	ST	6580	Overhead	Distribution	Luminaire	LUM HPS RWY 50W	Active	50	65485-54003	S-14	CITY OF E PROVIDENCE
0006	000	2	UNION	ST	6580	Overhead	Distribution	Luminaire	LUM HPS RWY 50W	Active	50	90426-19008	S-14	CITY OF E PROVIDENCE
0007	000	2	UNION	ST	6580	Overhead	Distribution	Luminaire	LUM HPS RWY 50W	Active	50	65485-54003	S-14	CITY OF E PROVIDENCE
0008	000	2	UNION	ST	6580	Overhead	Distribution	Luminaire	LUM HPS RWY 50W	Active	50	65485-54003	S-14	CITY OF E PROVIDENCE
0002	000	2	UNITY	AVE	6585	Overhead	Distribution	Luminaire	LUM HPS RWY 50W	Active	50	65485-54003	S-14	CITY OF E PROVIDENCE
0004	000	2	UNITY	AVE	6585	Overhead	Distribution	Luminaire	LUM HPS RWY 50W	Active	50	65485-54003	S-14	CITY OF E PROVIDENCE
0006	000	2	UNITY	AVE	6585	Overhead	Distribution	Luminaire	LUM HPS RWY 50W	Active	50	65485-54003	S-14	CITY OF E PROVIDENCE
0001	000	2	UPLAND	RD	6590	Overhead	Distribution	Luminaire	LUM HPS RWY 50W	Active	50	65485-54003	S-14	CITY OF E PROVIDENCE
0001	000	2	UPYONDA	WAY	6595	Overhead	Distribution	Luminaire	LUM HPS RWY 50W	Active	50	65485-54003	S-14	CITY OF E PROVIDENCE
0001	050	1	VALLEY	ST	6600	Overhead	Distribution	Luminaire	LUM HPS RWY 50W	Active	50	65485-54003	S-14	CITY OF E PROVIDENCE
0002	000	1	VALLEY	ST	6600	Overhead	Distribution	Luminaire	LUM HPS RWY 50W	Active	50	65485-54003	S-14	CITY OF E PROVIDENCE
0004	000	2	VALLEY	ST	6600	Overhead	Distribution	Luminaire	LUM HPS RWY 50W TT	Temp Turn Off	50	65485-54003	S-14	CITY OF E PROVIDENCE
0005	000	1	VALLEY	ST	6600	Overhead	Distribution	Luminaire	LUM HPS RWY 50W	Active	50	65485-54003	S-14	CITY OF E PROVIDENCE
0007	000	2	VALLEY	ST	6600	Overhead	Distribution	Luminaire	LUM HPS RWY 50W	Active	50	65485-54003	S-14	CITY OF E PROVIDENCE
0008	000	2	VALLEY	ST	6600	Overhead	Distribution	Luminaire	LUM HPS RWY 50W TT	Temp Turn Off	50	65485-54003	S-14	CITY OF E PROVIDENCE
0009	000	2	VALLEY	ST	6600	Overhead	Distribution	Luminaire	LUM HPS RWY 50W	Active	50	65485-54003	S-14	CITY OF E PROVIDENCE
0010	000	2	VALLEY	ST	6600	Overhead	Distribution	Luminaire	LUM HPS RWY 50W TT	Temp Turn Off	50	65485-54003	S-14	CITY OF E PROVIDENCE
0012	000	2	VALLEY	ST	6600	Overhead	Distribution	Luminaire	LUM HPS RWY 50W	Active	50	65485-54003	S-14	CITY OF E PROVIDENCE
0013	000	2	VALLEY	ST	6600	Overhead	Distribution	Luminaire	LUM HPS RWY 50W TT	Temp Turn Off	50	65485-54003	S-14	CITY OF E PROVIDENCE
0014	000	2	VALLEY	ST	6600	Overhead	Distribution	Luminaire	LUM HPS RWY 50W	Active	50	65485-54003	S-14	CITY OF E PROVIDENCE
0015	000	2	VALLEY	ST	6600	Overhead	Distribution	Luminaire	LUM HPS RWY 50W TT	Temp Turn Off	50	65485-54003	S-14	CITY OF E PROVIDENCE
0016	000	2	VALLEY	ST	6600	Overhead	Distribution	Luminaire	LUM HPS RWY 50W	Active	50	65485-54003	S-14	CITY OF E PROVIDENCE
0017	000	1	VALLEY	ST	6600	Overhead	Distribution	Luminaire	LUM HPS RWY 50W	Active	50	65485-54003	S-14	CITY OF E PROVIDENCE
9019	000	1	VALLEY	ST	6600	Overhead	Distribution	Luminaire	LUM HPS RWY 50W	Active	50	65485-54003	S-14	CITY OF E PROVIDENCE
0002	000	2	VALLEYBROOK	DR	6602	Overhead	Distribution	Luminaire	LUM HPS RWY 50W	Active	50	65485-54003	S-14	CITY OF E PROVIDENCE
0004	000	2	VALLEYBROOK	DR	6602	Overhead	Distribution	Luminaire	LUM HPS RWY 50W	Active	50	65485-54003	S-14	CITY OF E PROVIDENCE
0005	000	2	VALLEYBROOK	DR	6602	Overhead	Distribution	Luminaire	LUM HPS RWY 50W	Active	50	65485-54003	S-14	CITY OF E PROVIDENCE
0006	000	2	VALLEYBROOK	DR	6602	Overhead	Distribution	Luminaire	LUM HPS RWY 50W	Active	50	65485-54003	S-14	CITY OF E PROVIDENCE
0007	000	2	VALLEYBROOK	DR	6602	Overhead	Distribution	Luminaire	LUM HPS RWY 50W	Active	50	90426-19008	S-14	CITY OF E PROVIDENCE
0002	000	2	VANDERLAND	AVE	6605	Overhead	Distribution	Luminaire	LUM HPS RWY 50W	Active	50	65485-54003	S-14	CITY OF E PROVIDENCE
0004	000	2	VANDERLAND	AVE	6605	Overhead	Distribution	Luminaire	LUM HPS RWY 50W	Active	50	65485-54003	S-14	CITY OF E PROVIDENCE
0005	000	2	VANDERLAND	AVE	6605	Overhead	Distribution	Luminaire	LUM HPS RWY 50W	Active	50	65485-54003	S-14	CITY OF E PROVIDENCE
0008	000	2	VANDERLAND	AVE	6605	Overhead	Distribution	Luminaire	LUM HPS RWY 50W	Active	50	65485-54003	S-14	CITY OF E PROVIDENCE
0009	000	2	VANDERLAND	AVE	6605	Overhead	Distribution	Luminaire	LUM HPS RWY 50W	Active	50	65485-54003	S-14	CITY OF E PROVIDENCE
0011	000	1	VANDERLAND	AVE	6605	Overhead	Distribution	Luminaire	LUM HPS RWY 100W	Inactive	100	65485-54003	S-14	CITY OF E PROVIDENCE
0012	000	1	VANDERLAND	AVE	6605	Overhead	Distribution	Luminaire	LUM HPS RWY 50W	Inactive	50	65485-54003	S-14	CITY OF E PROVIDENCE
0003	000	2	VERMONT	AVE	6610	Overhead	Distribution	Luminaire	LUM HPS RWY 50W	Active	50	65485-54003	S-14	CITY OF E PROVIDENCE
0005	000	2	VERMONT	AVE	6610	Overhead	Distribution	Luminaire	LUM HPS RWY 50W	Active	50	65485-54003	S-14	CITY OF E PROVIDENCE
0007	000	2	VERMONT	AVE	6610	Overhead	Distribution	Luminaire	LUM HPS RWY 50W	Active	50	65485-54003	S-14	CITY OF E PROVIDENCE
0009	000	2	VERMONT	AVE	6610	Overhead	Distribution	Luminaire	LUM HPS RWY 50W	Active	50	65485-54003	S-14	CITY OF E PROVIDENCE
0002	000	2	VICTORIA	AVE	6625	Overhead	Distribution	Luminaire	LUM HPS RWY 50W	Active	50	65485-54003	S-14	CITY OF E PROVIDENCE
0003	000	2	VICTORIA	AVE	6625	Overhead	Distribution	Luminaire	LUM HPS RWY 50W TT	Temp Turn Off	50	65485-54003	S-14	CITY OF E PROVIDENCE
0004	000	2	VICTORIA	AVE	6625	Overhead	Distribution	Luminaire	LUM HPS RWY 50W	Active	50	65485-54003	S-14	CITY OF E PROVIDENCE
0006	000	1	VICTORIA	AVE	6625	Overhead	Distribution	Luminaire	LUM HPS RWY 50W	Inactive	50	65485-54003	S-14	CITY OF E PROVIDENCE
0001	000	2	VILLA	ST	6630	Overhead	Distribution	Luminaire	LUM HPS RWY 50W	Active	50	65485-54003	S-14	CITY OF E PROVIDENCE
0001	000	0	VILLAGE	DR	6631	Underground	Street Lighting	Pole	POLE METAL =>25FT	Inactive	0	65485-54003	S-14	CITY OF E PROVIDENCE
0001	000	2	VILLAGE	DR	6631	Underground	Street Lighting	Luminaire	LUM HPS RWY 100W	Active	100	65485-54003	S-14	CITY OF E PROVIDENCE
0002	000	0	VILLAGE	DR	6631	Underground	Street Lighting	Pole	POLE METAL =>25FT	Inactive	0	65485-54003	S-14	CITY OF E PROVIDENCE
0002	000	2	VILLAGE	DR	6631	Underground	Street Lighting	Luminaire	LUM HPS RWY 50W	Active	50	65485-54003	S-14	CITY OF E PROVIDENCE

Pole No	Pole Suffix	Light Sequ No	Street Name	Street Suffix	Ngrid Line No	Source Type	Pole Use	Component Type	Bill Print and Tariff Description	Billing Status	Lamp Wattage	Account No	Rate	Customer Name
0003	000	0	VILLAGE	DR	6631	Underground	Street Lighting	Pole	POLE METAL =>25FT	Inactive	0	65485-54003	S-14	CITY OF E PROVIDENCE
0003	000	2	VILLAGE	DR	6631	Underground	Street Lighting	Luminaire	LUM HPS RWY 50W	Active	50	65485-54003	S-14	CITY OF E PROVIDENCE
0004	000	0	VILLAGE	DR	6631	Underground	Street Lighting	Pole	POLE METAL =>25FT	Inactive	0	65485-54003	S-14	CITY OF E PROVIDENCE
0004	000	2	VILLAGE	DR	6631	Underground	Street Lighting	Luminaire	LUM HPS RWY 50W	Active	50	65485-54003	S-14	CITY OF E PROVIDENCE
0005	000	0	VILLAGE	DR	6631	Underground	Street Lighting	Pole	POLE METAL =>25FT	Inactive	0	65485-54003	S-14	CITY OF E PROVIDENCE
0005	000	2	VILLAGE	DR	6631	Underground	Street Lighting	Luminaire	LUM HPS RWY 50W	Active	50	65485-54003	S-14	CITY OF E PROVIDENCE
0002	000	2	VINCENT	AVE	6635	Overhead	Distribution	Luminaire	LUM HPS RWY 50W	Active	50	65485-54003	S-14	CITY OF E PROVIDENCE
0004	000	2	VINCENT	AVE	6635	Overhead	Distribution	Luminaire	LUM HPS RWY 50W	Active	50	65485-54003	S-14	CITY OF E PROVIDENCE
0006	000	2	VINCENT	AVE	6635	Overhead	Distribution	Luminaire	LUM HPS RWY 50W TT	Temp Turn Off	50	65485-54003	S-14	CITY OF E PROVIDENCE
0007	000	2	VINCENT	AVE	6635	Overhead	Distribution	Luminaire	LUM HPS RWY 50W	Active	50	65485-54003	S-14	CITY OF E PROVIDENCE
0008	000	2	VINCENT	AVE	6635	Overhead	Distribution	Luminaire	LUM HPS RWY 50W TT	Temp Turn Off	50	65485-54003	S-14	CITY OF E PROVIDENCE
0009	000	2	VINCENT	AVE	6635	Overhead	Distribution	Luminaire	LUM HPS RWY 50W TT	Temp Turn Off	50	65485-54003	S-14	CITY OF E PROVIDENCE
0010	000	2	VINCENT	AVE	6635	Overhead	Distribution	Luminaire	LUM HPS RWY 50W	Active	50	65485-54003	S-14	CITY OF E PROVIDENCE
0012	000	2	VINCENT	AVE	6635	Overhead	Distribution	Luminaire	LUM HPS RWY 50W	Active	50	65485-54003	S-14	CITY OF E PROVIDENCE
0013	000	2	VINCENT	AVE	6635	Overhead	Distribution	Luminaire	LUM HPS RWY 50W	Active	50	65485-54003	S-14	CITY OF E PROVIDENCE
0014	000	2	VINCENT	AVE	6635	Overhead	Distribution	Luminaire	LUM HPS RWY 50W	Active	50	65485-54003	S-14	CITY OF E PROVIDENCE
0015	000	2	VINCENT	AVE	6635	Overhead	Distribution	Luminaire	LUM HPS RWY 50W	Active	50	65485-54003	S-14	CITY OF E PROVIDENCE
0018	000	2	VINCENT	AVE	6635	Overhead	Distribution	Luminaire	LUM HPS RWY 50W	Active	50	65485-54003	S-14	CITY OF E PROVIDENCE
0020	000	2	VINCENT	AVE	6635	Overhead	Distribution	Luminaire	LUM HPS RWY 50W	Active	50	65485-54003	S-14	CITY OF E PROVIDENCE
0001	000	2	VINE	ST	6640	Overhead	Distribution	Luminaire	LUM HPS RWY 50W TT	Temp Turn Off	50	65485-54003	S-14	CITY OF E PROVIDENCE
0003	000	2	VINE	ST	6640	Overhead	Distribution	Luminaire	LUM HPS RWY 50W	Active	50	65485-54003	S-14	CITY OF E PROVIDENCE
0004	000	2	VINE	ST	6640	Overhead	Distribution	Luminaire	LUM HPS RWY 50W TT	Temp Turn Off	50	65485-54003	S-14	CITY OF E PROVIDENCE
0005	000	2	VINE	ST	6640	Overhead	Distribution	Luminaire	LUM HPS RWY 50W TT	Temp Turn Off	50	65485-54003	S-14	CITY OF E PROVIDENCE
0006	000	2	VINE	ST	6640	Overhead	Distribution	Luminaire	LUM HPS RWY 50W	Active	50	65485-54003	S-14	CITY OF E PROVIDENCE
0007	000	2	VINE	ST	6640	Overhead	Distribution	Luminaire	LUM HPS RWY 50W	Active	50	65485-54003	S-14	CITY OF E PROVIDENCE
0008	000	2	VINE	ST	6640	Overhead	Distribution	Luminaire	LUM HPS RWY 50W TT	Temp Turn Off	50	65485-54003	S-14	CITY OF E PROVIDENCE
0009	000	2	VINE	ST	6640	Overhead	Distribution	Luminaire	LUM HPS RWY 50W	Active	50	65485-54003	S-14	CITY OF E PROVIDENCE
0010	000	2	VINE	ST	6640	Overhead	Distribution	Luminaire	LUM HPS RWY 50W TT	Temp Turn Off	50	65485-54003	S-14	CITY OF E PROVIDENCE
0011	000	2	VINE	ST	6640	Overhead	Distribution	Luminaire	LUM HPS RWY 50W	Active	50	65485-54003	S-14	CITY OF E PROVIDENCE
0012	000	2	VINE	ST	6640	Overhead	Distribution	Luminaire	LUM HPS RWY 50W TT	Temp Turn Off	50	65485-54003	S-14	CITY OF E PROVIDENCE
0013	000	2	VINE	ST	6640	Overhead	Distribution	Luminaire	LUM HPS RWY 50W	Active	50	65485-54003	S-14	CITY OF E PROVIDENCE
0014	000	2	VINE	ST	6640	Overhead	Distribution	Luminaire	LUM HPS RWY 50W TT	Temp Turn Off	50	65485-54003	S-14	CITY OF E PROVIDENCE
0015	000	2	VINE	ST	6640	Overhead	Distribution	Luminaire	LUM HPS RWY 50W	Active	50	65485-54003	S-14	CITY OF E PROVIDENCE
0016	000	2	VINE	ST	6640	Overhead	Distribution	Luminaire	LUM HPS RWY 50W TT	Temp Turn Off	50	65485-54003	S-14	CITY OF E PROVIDENCE
0017	000	2	VINE	ST	6640	Overhead	Distribution	Luminaire	LUM HPS RWY 50W	Active	50	65485-54003	S-14	CITY OF E PROVIDENCE
0001	000	2	VINELAND	AVE	6645	Overhead	Distribution	Luminaire	LUM HPS RWY 50W TT	Temp Turn Off	50	65485-54003	S-14	CITY OF E PROVIDENCE
0001	050	2	VINELAND	AVE	6645	Overhead	Distribution	Luminaire	LUM HPS RWY 50W TT	Temp Turn Off	50	65485-54003	S-14	CITY OF E PROVIDENCE
0002	000	2	VINELAND	AVE	6645	Overhead	Distribution	Luminaire	LUM HPS RWY 50W	Active	50	65485-54003	S-14	CITY OF E PROVIDENCE
0005	000	2	VINELAND	AVE	6645	Overhead	Distribution	Luminaire	LUM HPS RWY 50W	Active	50	65485-54003	S-14	CITY OF E PROVIDENCE
0006	000	2	VINELAND	AVE	6645	Overhead	Distribution	Luminaire	LUM HPS RWY 50W	Active	50	65485-54003	S-14	CITY OF E PROVIDENCE
0001	000	2	VINEYARD	AVE	6650	Overhead	Distribution	Luminaire	LUM HPS RWY 50W	Active	50	65485-54003	S-14	CITY OF E PROVIDENCE
0002	000	2	VINEYARD	AVE	6650	Overhead	Distribution	Luminaire	LUM HPS RWY 50W	Active	50	65485-54003	S-14	CITY OF E PROVIDENCE
0004	000	2	VINEYARD	AVE	6650	Overhead	Distribution	Luminaire	LUM HPS RWY 50W	Active	50	65485-54003	S-14	CITY OF E PROVIDENCE
0006	000	2	VINEYARD	AVE	6650	Overhead	Distribution	Luminaire	LUM HPS RWY 50W TT	Temp Turn Off	50	65485-54003	S-14	CITY OF E PROVIDENCE
0007	000	2	VINEYARD	AVE	6650	Overhead	Distribution	Luminaire	LUM HPS RWY 50W	Active	50	65485-54003	S-14	CITY OF E PROVIDENCE
0001	000	2	VINTNER	AVE	6655	Overhead	Distribution	Luminaire	LUM HPS RWY 50W	Active	50	65485-54003	S-14	CITY OF E PROVIDENCE
0002	000	2	VINTNER	AVE	6655	Overhead	Distribution	Luminaire	LUM HPS RWY 50W	Active	50	65485-54003	S-14	CITY OF E PROVIDENCE
0003	000	2	VINTNER	AVE	6655	Overhead	Distribution	Luminaire	LUM HPS RWY 50W	Active	50	65485-54003	S-14	CITY OF E PROVIDENCE
0001	000	2	VIOLA	AVE	6660	Overhead	Distribution	Luminaire	LUM HPS RWY 50W	Active	50	65485-54003	S-14	CITY OF E PROVIDENCE
0002	000	2	VIOLA	AVE	6660	Overhead	Distribution	Luminaire	LUM HPS RWY 50W	Active	50	65485-54003	S-14	CITY OF E PROVIDENCE
0003	000	2	VIOLA	AVE	6660	Overhead	Distribution	Luminaire	LUM HPS RWY 50W TT	Temp Turn Off	50	65485-54003	S-14	CITY OF E PROVIDENCE
0005	000	2	VIOLA	AVE	6660	Overhead	Distribution	Luminaire	LUM HPS RWY 50W	Active	50	65485-54003	S-14	CITY OF E PROVIDENCE
0007	000	2	VIOLA	AVE	6660	Overhead	Distribution	Luminaire	LUM HPS RWY 50W TT	Temp Turn Off	50	65485-54003	S-14	CITY OF E PROVIDENCE
0001	000	2	VIRGINIA	LN	6665	Overhead	Distribution	Luminaire	LUM HPS RWY 50W	Active	50	65485-54003	S-14	CITY OF E PROVIDENCE
0002	000	2	VIRGINIA	LN	6665	Overhead	Distribution	Luminaire	LUM HPS RWY 50W	Active	50	65485-54003	S-14	CITY OF E PROVIDENCE

Pole No	Pole Suffix	Light Sequ No	Street Name	Street Suffix	Ngrid Line No	Source Type	Pole Use	Component Type	Bill Print and Tariff Description	Billing Status	Lamp Wattage	Account No	Rate	Customer Name
0001	000	2	VISTA	DR	6670	Overhead	Distribution	Luminaire	LUM HPS RWY 50W	Active	50	65485-54003	S-14	CITY OF E PROVIDENCE
0003	000	2	VISTA	DR	6670	Overhead	Distribution	Luminaire	LUM HPS RWY 50W	Active	50	65485-54003	S-14	CITY OF E PROVIDENCE
0004	000	2	VISTA	DR	6670	Overhead	Distribution	Luminaire	LUM HPS RWY 50W	Active	50	65485-54003	S-14	CITY OF E PROVIDENCE
0006	000	2	VISTA	DR	6670	Overhead	Distribution	Luminaire	LUM HPS RWY 50W	Active	50	65485-54003	S-14	CITY OF E PROVIDENCE
0007	000	2	VISTA	DR	6670	Overhead	Distribution	Luminaire	LUM HPS RWY 50W	Active	50	65485-54003	S-14	CITY OF E PROVIDENCE
0002	000	2	WALMER	AVE	6680	Overhead	Distribution	Luminaire	LUM HPS RWY 50W	Active	50	65485-54003	S-14	CITY OF E PROVIDENCE
0003	000	2	WALMER	AVE	6680	Overhead	Distribution	Luminaire	LUM HPS RWY 50W	Active	50	65485-54003	S-14	CITY OF E PROVIDENCE
0008	000	2	WALMER	AVE	6680	Overhead	Distribution	Luminaire	LUM HPS RWY 50W	Active	50	65485-54003	S-14	CITY OF E PROVIDENCE
0009	000	2	WALMER	AVE	6680	Overhead	Distribution	Luminaire	LUM HPS RWY 50W	Active	50	65485-54003	S-14	CITY OF E PROVIDENCE
0010	000	2	WALMER	AVE	6680	Overhead	Distribution	Luminaire	LUM HPS RWY 50W	Active	50	65485-54003	S-14	CITY OF E PROVIDENCE
0012	000	2	WALMER	AVE	6680	Overhead	Distribution	Luminaire	LUM HPS RWY 50W	Active	50	90426-19008	S-14	CITY OF E PROVIDENCE
0002	000	1	WALNUT	ST	6685	Overhead	Distribution	Luminaire	LUM HPS RWY 250W	Active	250	65485-54003	S-14	CITY OF E PROVIDENCE
0003	000	2	WALNUT	ST	6685	Overhead	Distribution	Luminaire	LUM HPS RWY 50W TT	Temp Turn Off	50	65485-54003	S-14	CITY OF E PROVIDENCE
0004	000	2	WALNUT	ST	6685	Overhead	Distribution	Luminaire	LUM HPS RWY 50W	Active	50	65485-54003	S-14	CITY OF E PROVIDENCE
0005	000	2	WALNUT	ST	6685	Overhead	Distribution	Luminaire	LUM HPS RWY 50W TT	Temp Turn Off	50	65485-54003	S-14	CITY OF E PROVIDENCE
0006	000	2	WALNUT	ST	6685	Overhead	Distribution	Luminaire	LUM HPS RWY 50W	Active	50	65485-54003	S-14	CITY OF E PROVIDENCE
0007	000	2	WALNUT	ST	6685	Overhead	Distribution	Luminaire	LUM HPS RWY 50W TT	Temp Turn Off	50	65485-54003	S-14	CITY OF E PROVIDENCE
0008	000	2	WALNUT	ST	6685	Overhead	Distribution	Luminaire	LUM HPS RWY 50W	Active	50	65485-54003	S-14	CITY OF E PROVIDENCE
0009	000	2	WALNUT	ST	6685	Overhead	Distribution	Luminaire	LUM HPS RWY 50W TT	Temp Turn Off	50	65485-54003	S-14	CITY OF E PROVIDENCE
0010	000	2	WALNUT	ST	6685	Overhead	Distribution	Luminaire	LUM HPS RWY 50W	Active	50	65485-54003	S-14	CITY OF E PROVIDENCE
0011	000	2	WALNUT	ST	6685	Overhead	Distribution	Luminaire	LUM HPS RWY 50W	Active	50	65485-54003	S-14	CITY OF E PROVIDENCE
0012	000	2	WALNUT	ST	6685	Overhead	Distribution	Luminaire	LUM HPS RWY 50W	Active	50	65485-54003	S-14	CITY OF E PROVIDENCE
0013	000	2	WALNUT	ST	6685	Overhead	Distribution	Luminaire	LUM HPS RWY 50W TT	Temp Turn Off	50	65485-54003	S-14	CITY OF E PROVIDENCE
0014	000	2	WALNUT	ST	6685	Overhead	Distribution	Luminaire	LUM HPS RWY 50W	Active	50	65485-54003	S-14	CITY OF E PROVIDENCE
0015	000	2	WALNUT	ST	6685	Overhead	Distribution	Luminaire	LUM HPS RWY 50W TT	Temp Turn Off	50	90426-19008	S-14	CITY OF E PROVIDENCE
0016	000	2	WALNUT	ST	6685	Overhead	Distribution	Luminaire	LUM HPS RWY 50W	Active	50	65485-54003	S-14	CITY OF E PROVIDENCE
0017	000	2	WALNUT	ST	6685	Overhead	Distribution	Luminaire	LUM HPS RWY 50W TT	Temp Turn Off	50	65485-54003	S-14	CITY OF E PROVIDENCE
0018	000	2	WALNUT	ST	6685	Overhead	Distribution	Luminaire	LUM HPS RWY 50W	Active	50	65485-54003	S-14	CITY OF E PROVIDENCE
0019	000	2	WALNUT	ST	6685	Overhead	Distribution	Luminaire	LUM HPS RWY 50W TT	Temp Turn Off	50	65485-54003	S-14	CITY OF E PROVIDENCE
0020	000	2	WALNUT	ST	6685	Overhead	Distribution	Luminaire	LUM HPS RWY 50W	Active	50	65485-54003	S-14	CITY OF E PROVIDENCE
0021	000	2	WALNUT	ST	6685	Overhead	Distribution	Luminaire	LUM HPS RWY 50W TT	Temp Turn Off	50	65485-54003	S-14	CITY OF E PROVIDENCE
0001	000	1	WAMPANOAG	TRL	6690	Overhead	Distribution	Luminaire	LUM HPS RWY 100W	Active	100	65485-54003	S-14	CITY OF E PROVIDENCE
0001	050	1	WAMPANOAG	TRL	6690	Overhead	Distribution	Luminaire	LUM HPS RWY 100W	Active	100	65485-54003	S-14	CITY OF E PROVIDENCE
0001	075	2	WAMPANOAG	TRL	6690	Overhead	Distribution	Luminaire	LUM HPS RWY 250W	Active	250	90426-19008	S-14	CITY OF E PROVIDENCE
0003	050	2	WAMPANOAG	TRL	6690	Overhead	Distribution	Luminaire	LUM HPS RWY 50W TT	Temp Turn Off	50	65485-54003	S-14	CITY OF E PROVIDENCE
0005	050	1	WAMPANOAG	TRL	6690	Overhead	Distribution	Luminaire	LUM HPS RWY 100W	Active	100	65485-54003	S-14	CITY OF E PROVIDENCE
0006	000	2	WAMPANOAG	TRL	6690	Overhead	Distribution	Luminaire	LUM HPS RWY 250W TT	Temp Turn Off	250	65485-54003	S-14	CITY OF E PROVIDENCE
0008	050	1	WAMPANOAG	TRL	6690	Overhead	Distribution	Luminaire	LUM HPS RWY 100W	Active	100	65485-54003	S-14	CITY OF E PROVIDENCE
0010	050	1	WAMPANOAG	TRL	6690	Overhead	Distribution	Luminaire	LUM HPS RWY 100W	Active	100	65485-54003	S-14	CITY OF E PROVIDENCE
0013	050	1	WAMPANOAG	TRL	6690	Overhead	Distribution	Luminaire	LUM HPS RWY 100W	Active	100	65485-54003	S-14	CITY OF E PROVIDENCE
0014	000	1	WAMPANOAG	TRL	6690	Overhead	Distribution	Luminaire	LUM HPS RWY 100W	Active	100	65485-54003	S-14	CITY OF E PROVIDENCE
0015	050	1	WAMPANOAG	TRL	6690	Overhead	Distribution	Luminaire	LUM HPS RWY 100W	Active	100	65485-54003	S-14	CITY OF E PROVIDENCE
0016	000	1	WAMPANOAG	TRL	6690	Overhead	Distribution	Luminaire	LUM HPS RWY 100W	Active	100	65485-54003	S-14	CITY OF E PROVIDENCE
0017	050	2	WAMPANOAG	TRL	6690	Overhead	Distribution	Luminaire	LUM HPS RWY 250W TT	Temp Turn Off	250	65485-54003	S-14	CITY OF E PROVIDENCE
0018	000	1	WAMPANOAG	TRL	6690	Overhead	Distribution	Luminaire	LUM HPS RWY 100W	Active	100	65485-54003	S-14	CITY OF E PROVIDENCE
0019	050	2	WAMPANOAG	TRL	6690	Overhead	Distribution	Luminaire	LUM HPS RWY 250W TT	Temp Turn Off	250	65485-54003	S-14	CITY OF E PROVIDENCE
0021	050	2	WAMPANOAG	TRL	6690	Overhead	Distribution	Luminaire	LUM HPS RWY 250W TT	Temp Turn Off	250	65485-54003	S-14	CITY OF E PROVIDENCE
0023	050	1	WAMPANOAG	TRL	6690	Overhead	Distribution	Luminaire	LUM HPS RWY 100W	Active	100	90426-19008	S-14	CITY OF E PROVIDENCE
0025	050	1	WAMPANOAG	TRL	6690	Overhead	Distribution	Luminaire	LUM HPS RWY 100W	Active	100	65485-54003	S-14	CITY OF E PROVIDENCE
0026	000	1	WAMPANOAG	TRL	6690	Overhead	Distribution	Luminaire	LUM HPS RWY 100W	Active	100	65485-54003	S-14	CITY OF E PROVIDENCE
0027	000	2	WAMPANOAG	TRL	6690	Overhead	Distribution	Luminaire	LUM HPS RWY 250W TT	Temp Turn Off	250	65485-54003	S-14	CITY OF E PROVIDENCE
0030	000	1	WAMPANOAG	TRL	6690	Overhead	Distribution	Luminaire	LUM HPS RWY 100W	Active	100	65485-54003	S-14	CITY OF E PROVIDENCE
0035	000	2	WAMPANOAG	TRL	6690	Overhead	Distribution	Luminaire	LUM HPS RWY 250W TT	Temp Turn Off	250	65485-54003	S-14	CITY OF E PROVIDENCE
0087	000	1	WAMPANOAG	TRL	6690	Overhead	Distribution	Luminaire	LUM HPS RWY 250W	Inactive	250	65485-54003	S-14	CITY OF E PROVIDENCE
0087	050	1	WAMPANOAG	TRL	6690	Overhead	Distribution	Luminaire	LUM HPS RWY 100W	Active	100	90426-19008	S-14	CITY OF E PROVIDENCE

Pole No	Pole Suffix	Light Sequ No	Street Name	Street Suffix	Ngrid Line No	Source Type	Pole Use	Component Type	Bill Print and Tariff Description	Billing Status	Lamp Wattage	Account No	Rate	Customer Name
0094	000	1	WAMPANOAG	TRL	6690	Overhead	Distribution	Luminaire	LUM HPS RWY 50W	Active	50	65485-54003	S-14	CITY OF E PROVIDENCE
0099	000	1	WAMPANOAG	TRL	6690	Overhead	Distribution	Luminaire	LUM HPS RWY 100W	Active	100	65485-54003	S-14	CITY OF E PROVIDENCE
0100	000	1	WAMPANOAG	TRL	6690	Overhead	Distribution	Luminaire	LUM HPS RWY 100W	Active	100	65485-54003	S-14	CITY OF E PROVIDENCE
0106	000	1	WAMPANOAG	TRL	6690	Overhead	Distribution	Luminaire	LUM HPS RWY 100W	Active	100	65485-54003	S-14	CITY OF E PROVIDENCE
0109	000	1	WAMPANOAG	TRL	6690	Overhead	Distribution	Luminaire	LUM HPS RWY 100W	Active	100	65485-54003	S-14	CITY OF E PROVIDENCE
0110	000	1	WAMPANOAG	TRL	6690	Overhead	Distribution	Luminaire	LUM HPS RWY 100W	Active	100	90426-19008	S-14	CITY OF E PROVIDENCE
0111	000	1	WAMPANOAG	TRL	6690	Overhead	Distribution	Luminaire	LUM HPS RWY 100W	Active	100	65485-54003	S-14	CITY OF E PROVIDENCE
0114	000	1	WAMPANOAG	TRL	6690	Overhead	Distribution	Luminaire	LUM HPS RWY 100W	Active	100	65485-54003	S-14	CITY OF E PROVIDENCE
0115	001	1	WAMPANOAG	TRL	6690	Overhead	Distribution	Luminaire	LUM HPS RWY 250W	Inactive	250	65485-54003	S-14	CITY OF E PROVIDENCE
0117	000	2	WAMPANOAG	TRL	6690	Overhead	Distribution	Luminaire	LUM HPS RWY 250W	Active	250	65485-54003	S-14	CITY OF E PROVIDENCE
0119	000	1	WAMPANOAG	TRL	6690	Overhead	Distribution	Luminaire	LUM HPS RWY 100W	Active	100	65485-54003	S-14	CITY OF E PROVIDENCE
0124	000	1	WAMPANOAG	TRL	6690	Overhead	Distribution	Luminaire	LUM HPS RWY 100W	Active	100	65485-54003	S-14	CITY OF E PROVIDENCE
0125	000	1	WAMPANOAG	TRL	6690	Overhead	Distribution	Luminaire	LUM HPS RWY 100W	Active	100	65485-54003	S-14	CITY OF E PROVIDENCE
9004	000	1	WAMPANOAG	TRL	6690	Overhead	Distribution	Luminaire	LUM HPS RWY 100W	Active	100	65485-54003	S-14	CITY OF E PROVIDENCE
9009	000	2	WAMPANOAG	TRL	6690	Overhead	Distribution	Luminaire	LUM HPS RWY 250W TT	Temp Turn Off	250	65485-54003	S-14	CITY OF E PROVIDENCE
9011	000	2	WAMPANOAG	TRL	6690	Overhead	Distribution	Luminaire	LUM HPS RWY 250W TT	Temp Turn Off	250	65485-54003	S-14	CITY OF E PROVIDENCE
9020	000	1	WAMPANOAG	TRL	6690	Overhead	Distribution	Luminaire	LUM HPS RWY 100W	Active	100	65485-54003	S-14	CITY OF E PROVIDENCE
9022	000	1	WAMPANOAG	TRL	6690	Overhead	Distribution	Luminaire	LUM HPS RWY 100W	Active	100	65485-54003	S-14	CITY OF E PROVIDENCE
9024	000	2	WAMPANOAG	TRL	6690	Overhead	Distribution	Luminaire	LUM HPS RWY 250W TT	Temp Turn Off	250	65485-54003	S-14	CITY OF E PROVIDENCE
9028	000	1	WAMPANOAG	TRL	6690	Overhead	Distribution	Luminaire	LUM HPS RWY 100W	Active	100	65485-54003	S-14	CITY OF E PROVIDENCE
9033	000	2	WAMPANOAG	TRL	6690	Overhead	Distribution	Luminaire	LUM HPS RWY 100W	Active	100	65485-54003	S-14	CITY OF E PROVIDENCE
9034	000	2	WAMPANOAG	TRL	6690	Overhead	Distribution	Luminaire	LUM HPS RWY 250W	Active	250	65485-54003	S-14	CITY OF E PROVIDENCE
9037	000	1	WAMPANOAG	TRL	6690	Overhead	Distribution	Luminaire	LUM HPS RWY 100W	Active	100	65485-54003	S-14	CITY OF E PROVIDENCE
9038	000	1	WAMPANOAG	TRL	6690	Overhead	Distribution	Luminaire	LUM HPS RWY 100W	Active	100	65485-54003	S-14	CITY OF E PROVIDENCE
9041	000	1	WAMPANOAG	TRL	6690	Overhead	Distribution	Luminaire	LUM HPS RWY 100W	Active	100	65485-54003	S-14	CITY OF E PROVIDENCE
9045	000	2	WAMPANOAG	TRL	6690	Overhead	Distribution	Luminaire	LUM HPS RWY 100W	Active	100	90426-19008	S-14	CITY OF E PROVIDENCE
9050	000	1	WAMPANOAG	TRL	6690	Overhead	Distribution	Luminaire	LUM HPS RWY 100W	Active	100	65485-54003	S-14	CITY OF E PROVIDENCE
9052	000	2	WAMPANOAG	TRL	6690	Overhead	Distribution	Luminaire	LUM HPS RWY 250W	Active	250	65485-54003	S-14	CITY OF E PROVIDENCE
9054	000	1	WAMPANOAG	TRL	6690	Overhead	Distribution	Luminaire	LUM HPS RWY 100W	Active	100	65485-54003	S-14	CITY OF E PROVIDENCE
9055	000	1	WAMPANOAG	TRL	6690	Overhead	Distribution	Luminaire	LUM HPS RWY 100W	Active	100	65485-54003	S-14	CITY OF E PROVIDENCE
0002	000	2	WAMSETTA	AVE	6695	Overhead	Distribution	Luminaire	LUM HPS RWY 50W	Active	50	65485-54003	S-14	CITY OF E PROVIDENCE
0002	000	2	WANNAMOISETT	RD	6700	Overhead	Distribution	Luminaire	LUM HPS RWY 50W	Active	50	65485-54003	S-14	CITY OF E PROVIDENCE
0004	000	2	WANNAMOISETT	RD	6700	Overhead	Distribution	Luminaire	LUM HPS RWY 50W	Active	50	65485-54003	S-14	CITY OF E PROVIDENCE
0006	000	2	WANNAMOISETT	RD	6700	Overhead	Distribution	Luminaire	LUM HPS RWY 50W	Active	50	65485-54003	S-14	CITY OF E PROVIDENCE
0008	000	2	WANNAMOISETT	RD	6700	Overhead	Distribution	Luminaire	LUM HPS RWY 50W	Active	50	65485-54003	S-14	CITY OF E PROVIDENCE
0010	000	2	WANNAMOISETT	RD	6700	Overhead	Distribution	Luminaire	LUM HPS RWY 50W	Active	50	65485-54003	S-14	CITY OF E PROVIDENCE
0011	000	2	WANNAMOISETT	RD	6700	Overhead	Distribution	Luminaire	LUM HPS RWY 50W	Active	50	65485-54003	S-14	CITY OF E PROVIDENCE
0012	000	2	WANNAMOISETT	RD	6700	Overhead	Distribution	Luminaire	LUM HPS RWY 50W	Active	50	65485-54003	S-14	CITY OF E PROVIDENCE
0013	000	2	WANNAMOISETT	RD	6700	Overhead	Distribution	Luminaire	LUM HPS RWY 50W	Active	50	65485-54003	S-14	CITY OF E PROVIDENCE
0015	000	2	WANNAMOISETT	RD	6700	Overhead	Distribution	Luminaire	LUM HPS RWY 50W	Active	50	65485-54003	S-14	CITY OF E PROVIDENCE
0017	000	2	WANNAMOISETT	RD	6700	Overhead	Distribution	Luminaire	LUM HPS RWY 50W	Active	50	65485-54003	S-14	CITY OF E PROVIDENCE
0002	000	2	WANNISETT	AVE	6705	Overhead	Distribution	Luminaire	LUM HPS RWY 50W	Active	50	65485-54003	S-14	CITY OF E PROVIDENCE
0004	000	1	WANNISETT	AVE	6705	Overhead	Distribution	Luminaire	LUM HPS RWY 50W	Active	50	65485-54003	S-14	CITY OF E PROVIDENCE
0006	000	2	WANNISETT	AVE	6705	Overhead	Distribution	Luminaire	LUM MV RWY 100W TT	Temp Turn Off	100	65485-54003	S-14	CITY OF E PROVIDENCE
0007	000	1	WANNISETT	AVE	6705	Overhead	Distribution	Luminaire	LUM HPS RWY 50W	Active	50	65485-54003	S-14	CITY OF E PROVIDENCE
0009	000	1	WANNISETT	AVE	6705	Overhead	Distribution	Luminaire	LUM HPS RWY 50W	Active	50	65485-54003	S-14	CITY OF E PROVIDENCE
0010	000	2	WANNISETT	AVE	6705	Overhead	Distribution	Luminaire	LUM HPS RWY 50W	Active	50	65485-54003	S-14	CITY OF E PROVIDENCE
0001	000	1	WARREN	AVE	6710	Overhead	Distribution	Luminaire	LUM HPS RWY 100W	Active	100	90426-19008	S-14	CITY OF E PROVIDENCE
0001	001	0	WARREN	AVE	63	Underground	Street Lighting	Pole	POLE FIBER PT <25	Inactive	0	90426-19008	S-14	CITY OF E PROVIDENCE
0001	001	1	WARREN	AVE	63	Underground	Street Lighting	Luminaire	LUM HPS POST 100W	Inactive	100	90426-19008	S-14	CITY OF E PROVIDENCE
0001	050	2	WARREN	AVE	6710	Overhead	Distribution	Luminaire	LUM HPS RWY 250W	Active	250	65485-54003	S-14	CITY OF E PROVIDENCE
0002	000	2	WARREN	AVE	6710	Overhead	Distribution	Luminaire	LUM HPS RWY 250W TT	Temp Turn Off	250	65485-54003	S-14	CITY OF E PROVIDENCE
0002	001	0	WARREN	AVE	63	Underground	Street Lighting	Pole	POLE FIBER PT <25	Active	0	90426-19008	S-14	CITY OF E PROVIDENCE
0002	001	1	WARREN	AVE	63	Underground	Street Lighting	Luminaire	LUM HPS POST 100W	Active	100	90426-19008	S-14	CITY OF E PROVIDENCE
0003	001	0	WARREN	AVE	63	Underground	Street Lighting	Pole	POLE FIBER RWY<25FT	Active	0	90426-19008	S-14	CITY OF E PROVIDENCE

Pole No	Pole Suffix	Light Sequ No	Street Name	Street Suffix	Ngrid Line No	Source Type	Pole Use	Component Type	Bill Print and Tariff Description	Billing Status	Lamp Wattage	Account No	Rate	Customer Name
0003	001	2	WARREN	AVE	63	Underground	Street Lighting	Luminaire	LUM HPS POST 100W	Active	100	90426-19008	S-14	CITY OF E PROVIDENCE
0004	001	0	WARREN	AVE	63	Underground	Street Lighting	Pole	POLE FIBER RWY<25FT	Active	0	90426-19008	S-14	CITY OF E PROVIDENCE
0004	001	2	WARREN	AVE	63	Underground	Street Lighting	Luminaire	LUM HPS POST 100W	Active	100	90426-19008	S-14	CITY OF E PROVIDENCE
0005	001	0	WARREN	AVE	63	Underground	Street Lighting	Pole	POLE FIBER RWY<25FT	Active	0	90426-19008	S-14	CITY OF E PROVIDENCE
0005	001	2	WARREN	AVE	63	Underground	Street Lighting	Luminaire	LUM HPS POST 100W	Active	100	90426-19008	S-14	CITY OF E PROVIDENCE
0006	001	0	WARREN	AVE	63	Underground	Street Lighting	Pole	POLE FIBER RWY<25FT	Active	0	90426-19008	S-14	CITY OF E PROVIDENCE
0006	001	2	WARREN	AVE	63	Underground	Street Lighting	Luminaire	LUM HPS POST 100W	Active	100	90426-19008	S-14	CITY OF E PROVIDENCE
0007	001	0	WARREN	AVE	63	Underground	Street Lighting	Pole	POLE FIBER RWY<25FT	Active	0	90426-19008	S-14	CITY OF E PROVIDENCE
0007	001	2	WARREN	AVE	63	Underground	Street Lighting	Luminaire	LUM HPS POST 100W	Active	100	90426-19008	S-14	CITY OF E PROVIDENCE
0008	001	0	WARREN	AVE	63	Underground	Street Lighting	Pole	POLE FIBER RWY<25FT	Active	0	90426-19008	S-14	CITY OF E PROVIDENCE
0008	001	2	WARREN	AVE	63	Underground	Street Lighting	Luminaire	LUM HPS POST 100W	Active	100	90426-19008	S-14	CITY OF E PROVIDENCE
0009	001	0	WARREN	AVE	63	Underground	Street Lighting	Pole	POLE FIBER RWY<25FT	Active	0	90426-19008	S-14	CITY OF E PROVIDENCE
0009	001	2	WARREN	AVE	63	Underground	Street Lighting	Luminaire	LUM HPS POST 100W	Active	100	90426-19008	S-14	CITY OF E PROVIDENCE
0010	000	1	WARREN	AVE	6710	Overhead	Distribution	Luminaire	LUM HPS RWY 100W	Active	100	90426-19008	S-14	CITY OF E PROVIDENCE
0010	001	0	WARREN	AVE	63	Underground	Street Lighting	Pole	POLE FIBER PT <25	Inactive	0	90426-19008	S-14	CITY OF E PROVIDENCE
0010	001	1	WARREN	AVE	63	Underground	Street Lighting	Luminaire	LUM HPS POST 100W	Inactive	100	90426-19008	S-14	CITY OF E PROVIDENCE
0011	000	1	WARREN	AVE	6710	Overhead	Distribution	Luminaire	LUM HPS RWY 50W	Active	50	65485-54003	S-14	CITY OF E PROVIDENCE
0011	001	0	WARREN	AVE	63	Underground	Street Lighting	Pole	POLE FIBER PT <25	Inactive	0	90426-19008	S-14	CITY OF E PROVIDENCE
0011	001	1	WARREN	AVE	63	Underground	Street Lighting	Luminaire	LUM HPS POST 100W	Inactive	100	90426-19008	S-14	CITY OF E PROVIDENCE
0011	050	1	WARREN	AVE	6710	Overhead	Distribution	Luminaire	LUM HPS RWY 100W	Active	100	65485-54003	S-14	CITY OF E PROVIDENCE
0012	001	0	WARREN	AVE	63	Underground	Street Lighting	Pole	POLE FIBER RWY<25FT	Active	0	90426-19008	S-14	CITY OF E PROVIDENCE
0012	001	2	WARREN	AVE	63	Underground	Street Lighting	Luminaire	LUM HPS POST 100W	Active	100	90426-19008	S-14	CITY OF E PROVIDENCE
0013	001	0	WARREN	AVE	63	Underground	Street Lighting	Pole	POLE FIBER RWY<25FT	Active	0	90426-19008	S-14	CITY OF E PROVIDENCE
0013	001	2	WARREN	AVE	63	Underground	Street Lighting	Luminaire	LUM HPS POST 100W	Active	100	90426-19008	S-14	CITY OF E PROVIDENCE
0014	001	0	WARREN	AVE	63	Underground	Street Lighting	Pole	POLE FIBER RWY<25FT	Active	0	90426-19008	S-14	CITY OF E PROVIDENCE
0014	001	2	WARREN	AVE	63	Underground	Street Lighting	Luminaire	LUM HPS POST 100W	Active	100	90426-19008	S-14	CITY OF E PROVIDENCE
0015	001	0	WARREN	AVE	63	Underground	Street Lighting	Pole	POLE FIBER RWY<25FT	Active	0	90426-19008	S-14	CITY OF E PROVIDENCE
0015	001	2	WARREN	AVE	63	Underground	Street Lighting	Luminaire	LUM HPS POST 100W	Active	100	90426-19008	S-14	CITY OF E PROVIDENCE
0016	000	1	WARREN	AVE	6710	Overhead	Distribution	Luminaire	LUM HPS RWY 100W	Active	100	90426-19008	S-14	CITY OF E PROVIDENCE
0016	001	0	WARREN	AVE	63	Underground	Street Lighting	Pole	POLE FIBER PT <25	Inactive	0	90426-19008	S-14	CITY OF E PROVIDENCE
0016	001	1	WARREN	AVE	63	Underground	Street Lighting	Luminaire	LUM HPS POST 100W	Inactive	100	90426-19008	S-14	CITY OF E PROVIDENCE
0017	001	0	WARREN	AVE	63	Underground	Street Lighting	Pole	POLE FIBER RWY<25FT	Active	0	90426-19008	S-14	CITY OF E PROVIDENCE
0017	001	2	WARREN	AVE	63	Underground	Street Lighting	Luminaire	LUM HPS POST 100W	Active	100	90426-19008	S-14	CITY OF E PROVIDENCE
0018	001	0	WARREN	AVE	63	Underground	Street Lighting	Pole	POLE FIBER RWY<25FT	Active	0	90426-19008	S-14	CITY OF E PROVIDENCE
0018	001	2	WARREN	AVE	63	Underground	Street Lighting	Luminaire	LUM HPS POST 100W	Active	100	90426-19008	S-14	CITY OF E PROVIDENCE
0019	000	1	WARREN	AVE	6710	Overhead	Distribution	Luminaire	LUM HPS RWY 100W	Active	100	90426-19008	S-14	CITY OF E PROVIDENCE
0019	001	0	WARREN	AVE	63	Underground	Street Lighting	Pole	POLE FIBER PT <25	Inactive	0	90426-19008	S-14	CITY OF E PROVIDENCE
0019	001	1	WARREN	AVE	63	Underground	Street Lighting	Luminaire	LUM HPS POST 100W	Inactive	100	90426-19008	S-14	CITY OF E PROVIDENCE
0019	050	2	WARREN	AVE	6710	Overhead	Distribution	Luminaire	LUM HPS RWY 250W TT	Temp Turn Off	250	65485-54003	S-14	CITY OF E PROVIDENCE
0020	001	0	WARREN	AVE	63	Underground	Street Lighting	Pole	POLE FIBER RWY<25FT	Active	0	90426-19008	S-14	CITY OF E PROVIDENCE
0020	001	2	WARREN	AVE	63	Underground	Street Lighting	Luminaire	LUM HPS POST 100W	Active	100	90426-19008	S-14	CITY OF E PROVIDENCE
0021	000	1	WARREN	AVE	6710	Overhead	Distribution	Luminaire	LUM HPS RWY 100W	Active	100	90426-19008	S-14	CITY OF E PROVIDENCE
0021	001	0	WARREN	AVE	63	Underground	Street Lighting	Pole	POLE FIBER PT <25	Inactive	0	90426-19008	S-14	CITY OF E PROVIDENCE
0021	001	1	WARREN	AVE	63	Underground	Street Lighting	Luminaire	LUM HPS POST 100W	Inactive	100	90426-19008	S-14	CITY OF E PROVIDENCE
0022	000	2	WARREN	AVE	6710	Overhead	Distribution	Luminaire	LUM HPS RWY 250W TT	Temp Turn Off	250	65485-54003	S-14	CITY OF E PROVIDENCE
0022	001	0	WARREN	AVE	63	Underground	Street Lighting	Pole	POLE FIBER PT <25	Active	0	90426-19008	S-14	CITY OF E PROVIDENCE
0022	001	1	WARREN	AVE	63	Underground	Street Lighting	Luminaire	LUM HPS POST 100W	Active	100	90426-19008	S-14	CITY OF E PROVIDENCE
0023	001	0	WARREN	AVE	63	Underground	Street Lighting	Pole	POLE FIBER RWY<25FT	Active	0	90426-19008	S-14	CITY OF E PROVIDENCE
0023	001	2	WARREN	AVE	63	Underground	Street Lighting	Luminaire	LUM HPS POST 100W	Active	100	90426-19008	S-14	CITY OF E PROVIDENCE
0024	001	0	WARREN	AVE	63	Underground	Street Lighting	Pole	POLE FIBER RWY<25FT	Active	0	90426-19008	S-14	CITY OF E PROVIDENCE
0024	001	2	WARREN	AVE	63	Underground	Street Lighting	Luminaire	LUM HPS POST 100W	Active	100	90426-19008	S-14	CITY OF E PROVIDENCE
0025	000	1	WARREN	AVE	6710	Overhead	Distribution	Luminaire	LUM HPS RWY 100W	Active	100	90426-19008	S-14	CITY OF E PROVIDENCE
0025	001	0	WARREN	AVE	63	Underground	Street Lighting	Pole	POLE FIBER PT <25	Inactive	0	90426-19008	S-14	CITY OF E PROVIDENCE
0025	001	1	WARREN	AVE	63	Underground	Street Lighting	Luminaire	LUM HPS POST 100W	Inactive	100	90426-19008	S-14	CITY OF E PROVIDENCE
0026	000	1	WARREN	AVE	6710	Overhead	Distribution	Luminaire	LUM HPS RWY 100W	Active	100	90426-19008	S-14	CITY OF E PROVIDENCE

Pole No	Pole Suffix	Light Sequ No	Street Name	Street Suffix	Ngrid Line No	Source Type	Pole Use	Component Type	Bill Print and Tariff Description	Billing Status	Lamp Wattage	Account No	Rate	Customer Name
0026	001	0	WARREN	AVE	63	Underground	Street Lighting	Pole	POLE FIBER PT <25	Inactive	0	90426-19008	S-14	CITY OF E PROVIDENCE
0026	001	1	WARREN	AVE	63	Underground	Street Lighting	Luminaire	LUM HPS POST 100W	Inactive	100	90426-19008	S-14	CITY OF E PROVIDENCE
0027	001	0	WARREN	AVE	63	Underground	Street Lighting	Pole	POLE FIBER RWY<25FT	Active	0	90426-19008	S-14	CITY OF E PROVIDENCE
0027	001	2	WARREN	AVE	63	Underground	Street Lighting	Luminaire	LUM HPS POST 100W	Active	100	90426-19008	S-14	CITY OF E PROVIDENCE
0028	001	0	WARREN	AVE	63	Underground	Street Lighting	Pole	POLE FIBER RWY<25FT	Active	0	90426-19008	S-14	CITY OF E PROVIDENCE
0028	001	2	WARREN	AVE	63	Underground	Street Lighting	Luminaire	LUM HPS POST 100W	Active	100	90426-19008	S-14	CITY OF E PROVIDENCE
0029	000	2	WARREN	AVE	6710	Overhead	Distribution	Luminaire	LUM HPS RWY 250W TT	Temp Turn Off	250	65485-54003	S-14	CITY OF E PROVIDENCE
0029	001	0	WARREN	AVE	63	Underground	Street Lighting	Pole	POLE FIBER PT <25	Active	0	90426-19008	S-14	CITY OF E PROVIDENCE
0029	001	1	WARREN	AVE	63	Underground	Street Lighting	Luminaire	LUM HPS POST 100W	Active	100	90426-19008	S-14	CITY OF E PROVIDENCE
0030	000	1	WARREN	AVE	6710	Overhead	Distribution	Luminaire	LUM HPS RWY 100W	Inactive	100	90426-19008	S-14	CITY OF E PROVIDENCE
0030	001	0	WARREN	AVE	63	Underground	Street Lighting	Pole	POLE FIBER PT <25	Active	0	90426-19008	S-14	CITY OF E PROVIDENCE
0030	001	1	WARREN	AVE	63	Underground	Street Lighting	Luminaire	LUM HPS POST 100W	Active	100	90426-19008	S-14	CITY OF E PROVIDENCE
0033	000	1	WARREN	AVE	6710	Overhead	Distribution	Luminaire	LUM HPS RWY 100W	Active	100	65485-54003	S-14	CITY OF E PROVIDENCE
0034	000	2	WARREN	AVE	6710	Overhead	Distribution	Luminaire	LUM HPS RWY 100W	Active	100	65485-54003	S-14	CITY OF E PROVIDENCE
0037	000	2	WARREN	AVE	6710	Overhead	Distribution	Luminaire	LUM HPS RWY 250W TT	Temp Turn Off	250	65485-54003	S-14	CITY OF E PROVIDENCE
0038	000	2	WARREN	AVE	6710	Overhead	Distribution	Luminaire	LUM HPS RWY 100W	Active	100	65485-54003	S-14	CITY OF E PROVIDENCE
0041	000	2	WARREN	AVE	6710	Overhead	Distribution	Luminaire	LUM HPS RWY 100W	Active	100	65485-54003	S-14	CITY OF E PROVIDENCE
0042	000	2	WARREN	AVE	6710	Overhead	Distribution	Luminaire	LUM HPS RWY 250W TT	Temp Turn Off	250	65485-54003	S-14	CITY OF E PROVIDENCE
0045	000	2	WARREN	AVE	6710	Overhead	Distribution	Luminaire	LUM HPS RWY 100W	Active	100	65485-54003	S-14	CITY OF E PROVIDENCE
0046	000	2	WARREN	AVE	6710	Overhead	Distribution	Luminaire	LUM HPS RWY 100W	Active	100	65485-54003	S-14	CITY OF E PROVIDENCE
0049	000	2	WARREN	AVE	6710	Overhead	Distribution	Luminaire	LUM HPS RWY 250W TT	Temp Turn Off	250	65485-54003	S-14	CITY OF E PROVIDENCE
0055	000	2	WARREN	AVE	6710	Overhead	Distribution	Luminaire	LUM HPS RWY 250W TT	Temp Turn Off	250	65485-54003	S-14	CITY OF E PROVIDENCE
0059	000	2	WARREN	AVE	6710	Overhead	Distribution	Luminaire	LUM HPS RWY 250W TT	Temp Turn Off	250	65485-54003	S-14	CITY OF E PROVIDENCE
0063	000	2	WARREN	AVE	6710	Overhead	Distribution	Luminaire	LUM HPS RWY 250W TT	Temp Turn Off	250	65485-54003	S-14	CITY OF E PROVIDENCE
0067	000	2	WARREN	AVE	6710	Overhead	Distribution	Luminaire	LUM HPS RWY 250W TT	Temp Turn Off	250	65485-54003	S-14	CITY OF E PROVIDENCE
0076	050	2	WARREN	AVE	6710	Overhead	Distribution	Luminaire	LUM HPS RWY 250W TT	Temp Turn Off	250	65485-54003	S-14	CITY OF E PROVIDENCE
0077	000	2	WARREN	AVE	6710	Overhead	Distribution	Luminaire	LUM HPS RWY 250W TT	Temp Turn Off	250	65485-54003	S-14	CITY OF E PROVIDENCE
0079	000	2	WARREN	AVE	6710	Overhead	Distribution	Luminaire	LUM HPS RWY 250W TT	Temp Turn Off	250	65485-54003	S-14	CITY OF E PROVIDENCE
0083	000	2	WARREN	AVE	6710	Overhead	Distribution	Luminaire	LUM HPS RWY 250W TT	Temp Turn Off	250	65485-54003	S-14	CITY OF E PROVIDENCE
0087	050	2	WARREN	AVE	6710	Overhead	Distribution	Luminaire	LUM HPS RWY 250W TT	Temp Turn Off	250	65485-54003	S-14	CITY OF E PROVIDENCE
0090	000	2	WARREN	AVE	6710	Overhead	Distribution	Luminaire	LUM HPS RWY 250W	Active	250	65485-54003	S-14	CITY OF E PROVIDENCE
0091	000	1	WARREN	AVE	6710	Overhead	Distribution	Luminaire	LUM HPS RWY 100W	Active	100	65485-54003	S-14	CITY OF E PROVIDENCE
0095	000	1	WARREN	AVE	6710	Overhead	Distribution	Luminaire	LUM HPS RWY 100W	Active	100	65485-54003	S-14	CITY OF E PROVIDENCE
0097	050	1	WARREN	AVE	6710	Overhead	Distribution	Luminaire	LUM HPS RWY 100W	Active	100	65485-54003	S-14	CITY OF E PROVIDENCE
0105	000	1	WARREN	AVE	6710	Overhead	Distribution	Luminaire	LUM HPS RWY 100W	Active	100	65485-54003	S-14	CITY OF E PROVIDENCE
0113	035	1	WARREN	AVE	6710	Overhead	Distribution	Luminaire	LUM HPS RWY 100W	Active	100	65485-54003	S-14	CITY OF E PROVIDENCE
0117	000	1	WARREN	AVE	6710	Overhead	Distribution	Luminaire	LUM HPS RWY 100W	Active	100	65485-54003	S-14	CITY OF E PROVIDENCE
0121	000	1	WARREN	AVE	6710	Overhead	Distribution	Luminaire	LUM HPS RWY 100W	Active	100	65485-54003	S-14	CITY OF E PROVIDENCE
0123	050	2	WARREN	AVE	6710	Overhead	Distribution	Luminaire	LUM HPS RWY 100W	Active	100	65485-54003	S-14	CITY OF E PROVIDENCE
0127	000	1	WARREN	AVE	6710	Overhead	Distribution	Luminaire	LUM HPS RWY 100W	Active	100	65485-54003	S-14	CITY OF E PROVIDENCE
0133	000	1	WARREN	AVE	6710	Overhead	Distribution	Luminaire	LUM HPS RWY 100W	Active	100	65485-54003	S-14	CITY OF E PROVIDENCE
0136	000	1	WARREN	AVE	6710	Overhead	Distribution	Luminaire	LUM HPS RWY 100W	Active	100	65485-54003	S-14	CITY OF E PROVIDENCE
0139	000	1	WARREN	AVE	6710	Overhead	Distribution	Luminaire	LUM HPS RWY 100W	Active	100	65485-54003	S-14	CITY OF E PROVIDENCE
0145	000	1	WARREN	AVE	6710	Overhead	Distribution	Luminaire	LUM HPS RWY 100W	Active	100	65485-54003	S-14	CITY OF E PROVIDENCE
0151	000	2	WARREN	AVE	6710	Overhead	Distribution	Luminaire	LUM HPS RWY 250W TT	Temp Turn Off	250	65485-54003	S-14	CITY OF E PROVIDENCE
0152	050	2	WARREN	AVE	6710	Overhead	Distribution	Luminaire	LUM HPS RWY 100W	Active	100	65485-54003	S-14	CITY OF E PROVIDENCE
0153	050	2	WARREN	AVE	6710	Overhead	Distribution	Luminaire	LUM HPS RWY 100W	Active	100	65485-54003	S-14	CITY OF E PROVIDENCE
0156	000	2	WARREN	AVE	6710	Overhead	Distribution	Luminaire	LUM HPS RWY 100W	Active	100	65485-54003	S-14	CITY OF E PROVIDENCE
0160	000	2	WARREN	AVE	6710	Overhead	Distribution	Luminaire	LUM HPS RWY 100W	Active	100	65485-54003	S-14	CITY OF E PROVIDENCE
0161	000	2	WARREN	AVE	6710	Overhead	Distribution	Luminaire	LUM HPS RWY 250W TT	Temp Turn Off	250	65485-54003	S-14	CITY OF E PROVIDENCE
0163	000	2	WARREN	AVE	6710	Overhead	Distribution	Luminaire	LUM HPS RWY 100W	Active	100	65485-54003	S-14	CITY OF E PROVIDENCE
0166	000	2	WARREN	AVE	6710	Overhead	Distribution	Luminaire	LUM HPS RWY 100W	Active	100	65485-54003	S-14	CITY OF E PROVIDENCE
0167	000	2	WARREN	AVE	6710	Overhead	Distribution	Luminaire	LUM HPS RWY 100W	Active	100	65485-54003	S-14	CITY OF E PROVIDENCE
0169	000	2	WARREN	AVE	6710	Overhead	Distribution	Luminaire	LUM HPS RWY 100W	Active	100	90426-19008	S-14	CITY OF E PROVIDENCE
0170	000	2	WARREN	AVE	6710	Overhead	Distribution	Luminaire	LUM HPS RWY 100W	Active	100	65485-54003	S-14	CITY OF E PROVIDENCE

Pole No	Pole Suffix	Light Sequ No	Street Name	Street Suffix	Ngrid Line No	Source Type	Pole Use	Component Type	Bill Print and Tariff Description	Billing Status	Lamp Wattage	Account No	Rate	Customer Name
0171	000	2	WARREN	AVE	6710	Overhead	Distribution	Luminaire	LUM HPS RWY 250W	Active	250	65485-54003	S-14	CITY OF E PROVIDENCE
0172	000	2	WARREN	AVE	6710	Overhead	Distribution	Luminaire	LUM HPS RWY 100W	Active	100	65485-54003	S-14	CITY OF E PROVIDENCE
0174	000	2	WARREN	AVE	6710	Overhead	Distribution	Luminaire	LUM HPS RWY 250W TT	Temp Turn Off	250	65485-54003	S-14	CITY OF E PROVIDENCE
0176	000	2	WARREN	AVE	6710	Overhead	Distribution	Luminaire	LUM HPS RWY 250W	Active	250	65485-54003	S-14	CITY OF E PROVIDENCE
0178	000	2	WARREN	AVE	6710	Overhead	Distribution	Luminaire	LUM HPS RWY 250W TT	Temp Turn Off	250	65485-54003	S-14	CITY OF E PROVIDENCE
0179	000	2	WARREN	AVE	6710	Overhead	Distribution	Luminaire	LUM HPS RWY 250W TT	Temp Turn Off	250	65485-54003	S-14	CITY OF E PROVIDENCE
0180	000	2	WARREN	AVE	6710	Overhead	Distribution	Luminaire	LUM HPS RWY 100W	Active	100	65485-54003	S-14	CITY OF E PROVIDENCE
0182	000	1	WARREN	AVE	6710	Overhead	Distribution	Luminaire	LUM HPS RWY 100W	Active	100	65485-54003	S-14	CITY OF E PROVIDENCE
0185	000	2	WARREN	AVE	6710	Overhead	Distribution	Luminaire	LUM HPS RWY 100W	Active	100	65485-54003	S-14	CITY OF E PROVIDENCE
0187	000	1	WARREN	AVE	6710	Overhead	Distribution	Luminaire	LUM HPS RWY 100W	Active	100	65485-54003	S-14	CITY OF E PROVIDENCE
0189	000	1	WARREN	AVE	6710	Overhead	Distribution	Luminaire	LUM HPS RWY 100W	Active	100	65485-54003	S-14	CITY OF E PROVIDENCE
0191	000	1	WARREN	AVE	6710	Overhead	Distribution	Luminaire	LUM HPS RWY 100W	Active	100	65485-54003	S-14	CITY OF E PROVIDENCE
0193	000	2	WARREN	AVE	6710	Overhead	Distribution	Luminaire	LUM HPS RWY 100W	Active	100	65485-54003	S-14	CITY OF E PROVIDENCE
0194	000	2	WARREN	AVE	6710	Overhead	Distribution	Luminaire	LUM HPS RWY 250W TT	Temp Turn Off	250	65485-54003	S-14	CITY OF E PROVIDENCE
0195	000	1	WARREN	AVE	6710	Overhead	Distribution	Luminaire	LUM HPS RWY 100W	Active	100	65485-54003	S-14	CITY OF E PROVIDENCE
0197	000	1	WARREN	AVE	6710	Overhead	Distribution	Luminaire	LUM HPS RWY 100W	Active	100	65485-54003	S-14	CITY OF E PROVIDENCE
0198	000	2	WARREN	AVE	6710	Overhead	Distribution	Luminaire	LUM HPS RWY 250W TT	Temp Turn Off	250	65485-54003	S-14	CITY OF E PROVIDENCE
0200	000	1	WARREN	AVE	6710	Overhead	Distribution	Luminaire	LUM HPS RWY 100W	Active	100	65485-54003	S-14	CITY OF E PROVIDENCE
0201	000	1	WARREN	AVE	6710	Overhead	Distribution	Luminaire	LUM HPS RWY 100W	Active	100	65485-54003	S-14	CITY OF E PROVIDENCE
0202	000	1	WARREN	AVE	6710	Overhead	Distribution	Luminaire	LUM HPS RWY 100W	Active	100	65485-54003	S-14	CITY OF E PROVIDENCE
0203	000	1	WARREN	AVE	6710	Overhead	Distribution	Luminaire	LUM HPS RWY 100W	Active	100	65485-54003	S-14	CITY OF E PROVIDENCE
0206	000	1	WARREN	AVE	6710	Overhead	Distribution	Luminaire	LUM HPS RWY 100W	Active	100	65485-54003	S-14	CITY OF E PROVIDENCE
0207	000	2	WARREN	AVE	6710	Overhead	Distribution	Luminaire	LUM HPS RWY 250W TT	Temp Turn Off	250	65485-54003	S-14	CITY OF E PROVIDENCE
0208	000	1	WARREN	AVE	6710	Overhead	Distribution	Luminaire	LUM HPS RWY 250W	Active	250	90426-19008	S-14	CITY OF E PROVIDENCE
0210	000	2	WARREN	AVE	6710	Overhead	Distribution	Luminaire	LUM HPS RWY 100W	Active	100	65485-54003	S-14	CITY OF E PROVIDENCE
0211	000	1	WARREN	AVE	6710	Overhead	Distribution	Luminaire	LUM HPS RWY 100W	Active	100	65485-54003	S-14	CITY OF E PROVIDENCE
9050	000	1	WARREN	AVE	6710	Overhead	Distribution	Luminaire	LUM HPS RWY 100W	Active	100	65485-54003	S-14	CITY OF E PROVIDENCE
9056	000	1	WARREN	AVE	6710	Overhead	Distribution	Luminaire	LUM HPS RWY 100W	Active	100	65485-54003	S-14	CITY OF E PROVIDENCE
9060	000	2	WARREN	AVE	6710	Overhead	Distribution	Luminaire	LUM HPS RWY 250W TT	Temp Turn Off	250	65485-54003	S-14	CITY OF E PROVIDENCE
9064	000	2	WARREN	AVE	6710	Overhead	Distribution	Luminaire	LUM HPS RWY 250W TT	Temp Turn Off	250	65485-54003	S-14	CITY OF E PROVIDENCE
9068	000	2	WARREN	AVE	6710	Overhead	Distribution	Luminaire	LUM HPS RWY 250W TT	Temp Turn Off	250	65485-54003	S-14	CITY OF E PROVIDENCE
9070	000	2	WARREN	AVE	6710	Overhead	Distribution	Luminaire	LUM HPS RWY 250W TT	Temp Turn Off	250	65485-54003	S-14	CITY OF E PROVIDENCE
9072	050	2	WARREN	AVE	6710	Overhead	Distribution	Luminaire	LUM HPS RWY 250W TT	Temp Turn Off	250	65485-54003	S-14	CITY OF E PROVIDENCE
9073	000	2	WARREN	AVE	6710	Overhead	Distribution	Luminaire	LUM HPS RWY 250W TT	Temp Turn Off	250	65485-54003	S-14	CITY OF E PROVIDENCE
9080	000	2	WARREN	AVE	6710	Overhead	Distribution	Luminaire	LUM HPS RWY 250W TT	Temp Turn Off	250	65485-54003	S-14	CITY OF E PROVIDENCE
9084	000	2	WARREN	AVE	6710	Overhead	Distribution	Luminaire	LUM HPS RWY 250W TT	Temp Turn Off	250	65485-54003	S-14	CITY OF E PROVIDENCE
9088	000	2	WARREN	AVE	6710	Overhead	Distribution	Luminaire	LUM HPS RWY 250W	Active	250	65485-54003	S-14	CITY OF E PROVIDENCE
9092	000	1	WARREN	AVE	6710	Overhead	Distribution	Luminaire	LUM HPS RWY 100W	Active	100	65485-54003	S-14	CITY OF E PROVIDENCE
9096	000	2	WARREN	AVE	6710	Overhead	Distribution	Luminaire	LUM HPS RWY 250W TT	Temp Turn Off	250	65485-54003	S-14	CITY OF E PROVIDENCE
9100	000	2	WARREN	AVE	6710	Overhead	Distribution	Luminaire	LUM HPS RWY 250W	Active	250	65485-54003	S-14	CITY OF E PROVIDENCE
9108	000	1	WARREN	AVE	6710	Overhead	Distribution	Luminaire	LUM HPS RWY 100W	Active	100	65485-54003	S-14	CITY OF E PROVIDENCE
9114	000	1	WARREN	AVE	6710	Overhead	Distribution	Luminaire	LUM HPS RWY 100W	Active	100	65485-54003	S-14	CITY OF E PROVIDENCE
9118	000	1	WARREN	AVE	6710	Overhead	Distribution	Luminaire	LUM HPS RWY 100W	Active	100	65485-54003	S-14	CITY OF E PROVIDENCE
9122	050	1	WARREN	AVE	6710	Overhead	Distribution	Luminaire	LUM HPS RWY 100W	Active	100	65485-54003	S-14	CITY OF E PROVIDENCE
9128	000	1	WARREN	AVE	6710	Overhead	Distribution	Luminaire	LUM HPS RWY 100W	Active	100	65485-54003	S-14	CITY OF E PROVIDENCE
9136	000	1	WARREN	AVE	6710	Overhead	Distribution	Luminaire	LUM HPS RWY 100W	Active	100	65485-54003	S-14	CITY OF E PROVIDENCE
9142	000	1	WARREN	AVE	6710	Overhead	Distribution	Luminaire	LUM HPS RWY 100W	Active	100	65485-54003	S-14	CITY OF E PROVIDENCE
9148	000	1	WARREN	AVE	6710	Overhead	Distribution	Luminaire	LUM HPS RWY 100W	Active	100	65485-54003	S-14	CITY OF E PROVIDENCE
0002	000	2	WARWICK	ST	6715	Overhead	Distribution	Luminaire	LUM HPS RWY 50W	Active	50	65485-54003	S-14	CITY OF E PROVIDENCE
0004	000	2	WARWICK	ST	6715	Overhead	Distribution	Luminaire	LUM HPS RWY 50W	Active	50	65485-54003	S-14	CITY OF E PROVIDENCE
0006	000	2	WARWICK	ST	6715	Overhead	Distribution	Luminaire	LUM HPS RWY 50W TT	Temp Turn Off	50	65485-54003	S-14	CITY OF E PROVIDENCE
0007	000	2	WARWICK	ST	6715	Overhead	Distribution	Luminaire	LUM HPS RWY 50W	Active	50	65485-54003	S-14	CITY OF E PROVIDENCE
0008	000	2	WARWICK	ST	6715	Overhead	Distribution	Luminaire	LUM HPS RWY 50W	Active	50	65485-54003	S-14	CITY OF E PROVIDENCE
0001	000	2	WASHBURN	AVE	6720	Overhead	Distribution	Luminaire	LUM HPS RWY 50W	Active	50	65485-54003	S-14	CITY OF E PROVIDENCE
0002	000	2	WASHBURN	AVE	6720	Overhead	Distribution	Luminaire	LUM HPS RWY 50W TT	Temp Turn Off	50	65485-54003	S-14	CITY OF E PROVIDENCE

Pole No	Pole Suffix	Light Sequ No	Street Name	Street Suffix	Ngrid Line No	Source Type	Pole Use	Component Type	Bill Print and Tariff Description	Billing Status	Lamp Wattage	Account No	Rate	Customer Name
0004	000	2	WASHBURN	AVE	6720	Overhead	Distribution	Luminaire	LUM HPS RWY 50W	Active	50	65485-54003	S-14	CITY OF E PROVIDENCE
0006	000	2	WASHBURN	AVE	6720	Overhead	Distribution	Luminaire	LUM HPS RWY 50W	Active	50	65485-54003	S-14	CITY OF E PROVIDENCE
0007	000	2	WASHBURN	AVE	6720	Overhead	Distribution	Luminaire	LUM HPS RWY 50W TT	Temp Turn Off	50	65485-54003	S-14	CITY OF E PROVIDENCE
0009	000	2	WASHBURN	AVE	6720	Overhead	Distribution	Luminaire	LUM HPS RWY 50W	Active	50	65485-54003	S-14	CITY OF E PROVIDENCE
0011	000	2	WASHBURN	AVE	6720	Overhead	Distribution	Luminaire	LUM HPS RWY 50W	Active	50	65485-54003	S-14	CITY OF E PROVIDENCE
0013	000	2	WASHBURN	AVE	6720	Overhead	Distribution	Luminaire	LUM HPS RWY 50W	Active	50	65485-54003	S-14	CITY OF E PROVIDENCE
0015	000	2	WASHBURN	AVE	6720	Overhead	Distribution	Luminaire	LUM HPS RWY 50W	Active	50	65485-54003	S-14	CITY OF E PROVIDENCE
0001	000	2	WASHINGTON	AVE	6725	Overhead	Distribution	Luminaire	LUM HPS RWY 50W	Active	50	90426-19008	S-14	CITY OF E PROVIDENCE
0002	000	2	WASHINGTON	AVE	6725	Overhead	Distribution	Luminaire	LUM HPS RWY 100W	Active	100	65485-54003	S-14	CITY OF E PROVIDENCE
0003	000	2	WASHINGTON	AVE	6725	Overhead	Distribution	Luminaire	LUM HPS RWY 50W TT	Temp Turn Off	50	65485-54003	S-14	CITY OF E PROVIDENCE
0005	000	2	WASHINGTON	AVE	6725	Overhead	Distribution	Luminaire	LUM HPS RWY 50W	Active	50	65485-54003	S-14	CITY OF E PROVIDENCE
0006	000	2	WASHINGTON	AVE	6725	Overhead	Distribution	Luminaire	LUM HPS RWY 50W	Active	50	65485-54003	S-14	CITY OF E PROVIDENCE
0008	000	2	WASHINGTON	AVE	6725	Overhead	Distribution	Luminaire	LUM HPS RWY 50W	Active	50	65485-54003	S-14	CITY OF E PROVIDENCE
0009	000	2	WASHINGTON	AVE	6725	Overhead	Distribution	Luminaire	LUM HPS RWY 50W	Active	50	65485-54003	S-14	CITY OF E PROVIDENCE
0011	000	2	WASHINGTON	AVE	6725	Overhead	Distribution	Luminaire	LUM HPS RWY 50W	Active	50	65485-54003	S-14	CITY OF E PROVIDENCE
0012	000	2	WASHINGTON	AVE	6725	Overhead	Distribution	Luminaire	LUM HPS RWY 50W	Active	50	65485-54003	S-14	CITY OF E PROVIDENCE
0001	000	1	WATER	ST	6730	Overhead	Distribution	Luminaire	LUM HPS FLD 250W	Inactive	250	65485-54003	S-14	CITY OF E PROVIDENCE
0001	050	2	WATER	ST	6730	Overhead	Distribution	Luminaire	LUM HPS RWY 50W	Active	50	65485-54003	S-14	CITY OF E PROVIDENCE
0003	000	2	WATER	ST	6730	Overhead	Distribution	Luminaire	LUM HPS RWY 50W	Active	50	65485-54003	S-14	CITY OF E PROVIDENCE
0006	050	2	WATER	ST	6730	Overhead	Distribution	Luminaire	LUM HPS RWY 50W	Active	50	65485-54003	S-14	CITY OF E PROVIDENCE
0009	000	2	WATER	ST	6730	Overhead	Distribution	Luminaire	LUM HPS RWY 50W TT	Temp Turn Off	50	65485-54003	S-14	CITY OF E PROVIDENCE
0010	000	2	WATER	ST	6730	Overhead	Distribution	Luminaire	LUM HPS RWY 50W	Active	50	65485-54003	S-14	CITY OF E PROVIDENCE
0011	000	1	WATER	ST	6730	Overhead	Distribution	Luminaire	LUM HPS FLD 250W	Inactive	250	65485-54003	S-14	CITY OF E PROVIDENCE
0011	000	2	WATER	ST	6730	Overhead	Distribution	Luminaire	LUM HPS RWY 50W TT	Temp Turn Off	50	65485-54003	S-14	CITY OF E PROVIDENCE
0013	000	1	WATER	ST	6730	Overhead	Distribution	Luminaire	LUM HPS FLD 250W	Inactive	250	65485-54003	S-14	CITY OF E PROVIDENCE
0013	000	2	WATER	ST	6730	Overhead	Distribution	Luminaire	LUM HPS RWY 50W	Active	50	65485-54003	S-14	CITY OF E PROVIDENCE
0014	000	2	WATER	ST	6730	Overhead	Distribution	Luminaire	LUM HPS RWY 50W	Active	50	65485-54003	S-14	CITY OF E PROVIDENCE
0015	000	1	WATER	ST	6730	Overhead	Distribution	Luminaire	LUM HPS RWY 50W	Inactive	50	65485-54003	S-14	CITY OF E PROVIDENCE
0001	000	2	WATER VIEW	AVE	6735	Overhead	Distribution	Luminaire	LUM HPS RWY 50W	Active	50	65485-54003	S-14	CITY OF E PROVIDENCE
0003	000	2	WATER VIEW	AVE	6735	Overhead	Distribution	Luminaire	LUM HPS RWY 250W	Active	250	65485-54003	S-14	CITY OF E PROVIDENCE
0005	000	2	WATER VIEW	AVE	6735	Overhead	Distribution	Luminaire	LUM HPS RWY 50W	Active	50	65485-54003	S-14	CITY OF E PROVIDENCE
0006	000	2	WATER VIEW	AVE	6735	Overhead	Distribution	Luminaire	LUM HPS RWY 50W	Active	50	65485-54003	S-14	CITY OF E PROVIDENCE
0007	000	2	WATER VIEW	AVE	6735	Overhead	Distribution	Luminaire	LUM HPS RWY 50W	Active	50	65485-54003	S-14	CITY OF E PROVIDENCE
0009	000	2	WATER VIEW	AVE	6735	Overhead	Distribution	Luminaire	LUM HPS RWY 50W	Active	50	65485-54003	S-14	CITY OF E PROVIDENCE
0011	000	2	WATER VIEW	AVE	6735	Overhead	Distribution	Luminaire	LUM HPS RWY 50W	Active	50	65485-54003	S-14	CITY OF E PROVIDENCE
0012	000	2	WATER VIEW	AVE	6735	Overhead	Distribution	Luminaire	LUM HPS RWY 50W	Active	50	65485-54003	S-14	CITY OF E PROVIDENCE
0014	000	2	WATER VIEW	AVE	6735	Overhead	Distribution	Luminaire	LUM HPS RWY 100W TT	Temp Turn Off	100	90426-19008	S-14	CITY OF E PROVIDENCE
0015	000	2	WATER VIEW	AVE	6735	Overhead	Distribution	Luminaire	LUM HPS RWY 50W	Active	50	65485-54003	S-14	CITY OF E PROVIDENCE
0001	000	0	WATERFRONT	DR	1	Underground	Street Lighting	Pole	POLE METAL =>25FT	Inactive	0	65485-54003	S-14	CITY OF E PROVIDENCE
0001	000	1	WATERFRONT	DR	1	Underground	Street Lighting	Luminaire	LUM HPS RWY 250W	Inactive	250	65485-54003	S-14	CITY OF E PROVIDENCE
0002	000	0	WATERFRONT	DR	1	Underground	Street Lighting	Pole	POLE METAL =>25FT	Inactive	0	65485-54003	S-14	CITY OF E PROVIDENCE
0002	000	1	WATERFRONT	DR	1	Underground	Street Lighting	Luminaire	LUM HPS RWY 250W	Inactive	250	65485-54003	S-14	CITY OF E PROVIDENCE
0003	000	0	WATERFRONT	DR	1	Underground	Street Lighting	Pole	POLE METAL =>25FT	Inactive	0	65485-54003	S-14	CITY OF E PROVIDENCE
0003	000	1	WATERFRONT	DR	1	Underground	Street Lighting	Luminaire	LUM HPS RWY 250W	Inactive	250	65485-54003	S-14	CITY OF E PROVIDENCE
0004	000	0	WATERFRONT	DR	1	Underground	Street Lighting	Pole	POLE METAL =>25FT	Inactive	0	65485-54003	S-14	CITY OF E PROVIDENCE
0004	000	1	WATERFRONT	DR	1	Underground	Street Lighting	Luminaire	LUM HPS RWY 250W	Inactive	250	65485-54003	S-14	CITY OF E PROVIDENCE
0005	000	0	WATERFRONT	DR	1	Underground	Street Lighting	Pole	POLE METAL =>25FT	Inactive	0	65485-54003	S-14	CITY OF E PROVIDENCE
0005	000	1	WATERFRONT	DR	1	Underground	Street Lighting	Luminaire	LUM HPS RWY 250W	Inactive	250	65485-54003	S-14	CITY OF E PROVIDENCE
0006	000	0	WATERFRONT	DR	1	Underground	Street Lighting	Pole	POLE METAL =>25FT	Inactive	0	65485-54003	S-14	CITY OF E PROVIDENCE
0006	000	1	WATERFRONT	DR	1	Underground	Street Lighting	Luminaire	LUM HPS RWY 250W	Inactive	250	65485-54003	S-14	CITY OF E PROVIDENCE
0007	000	0	WATERFRONT	DR	1	Underground	Street Lighting	Pole	POLE METAL =>25FT	Inactive	0	65485-54003	S-14	CITY OF E PROVIDENCE
0007	000	1	WATERFRONT	DR	1	Underground	Street Lighting	Luminaire	LUM HPS RWY 250W	Inactive	250	65485-54003	S-14	CITY OF E PROVIDENCE
0008	000	0	WATERFRONT	DR	1	Underground	Street Lighting	Pole	POLE METAL =>25FT	Inactive	0	65485-54003	S-14	CITY OF E PROVIDENCE
0008	000	1	WATERFRONT	DR	1	Underground	Street Lighting	Luminaire	LUM HPS RWY 250W	Inactive	250	65485-54003	S-14	CITY OF E PROVIDENCE
0020	000	2	WATERMAN	AVE	6740	Overhead	Distribution	Luminaire	LUM HPS RWY 250W TT	Temp Turn Off	250	65485-54003	S-14	CITY OF E PROVIDENCE

Pole No	Pole Suffix	Light Sequ No	Street Name	Street Suffix	Ngrid Line No	Source Type	Pole Use	Component Type	Bill Print and Tariff Description	Billing Status	Lamp Wattage	Account No	Rate	Customer Name
0021	000	2	WATERMAN	AVE	6740	Overhead	Distribution	Luminaire	LUM HPS RWY 250W	Active	250	65485-54003	S-14	CITY OF E PROVIDENCE
0023	000	1	WATERMAN	AVE	6740	Overhead	Distribution	Luminaire	LUM HPS RWY 100W	Active	100	65485-54003	S-14	CITY OF E PROVIDENCE
0025	000	1	WATERMAN	AVE	6740	Overhead	Distribution	Luminaire	LUM HPS RWY 100W	Active	100	65485-54003	S-14	CITY OF E PROVIDENCE
0026	000	2	WATERMAN	AVE	6740	Overhead	Distribution	Luminaire	LUM HPS RWY 250W TT	Temp Turn Off	250	65485-54003	S-14	CITY OF E PROVIDENCE
0027	000	1	WATERMAN	AVE	6740	Overhead	Distribution	Luminaire	LUM HPS RWY 100W	Active	100	65485-54003	S-14	CITY OF E PROVIDENCE
0030	000	1	WATERMAN	AVE	6740	Overhead	Distribution	Luminaire	LUM HPS RWY 100W	Active	100	65485-54003	S-14	CITY OF E PROVIDENCE
0031	000	2	WATERMAN	AVE	6740	Overhead	Distribution	Luminaire	LUM HPS RWY 250W TT	Temp Turn Off	250	65485-54003	S-14	CITY OF E PROVIDENCE
0034	000	2	WATERMAN	AVE	6740	Overhead	Distribution	Luminaire	LUM HPS RWY 250W	Active	250	65485-54003	S-14	CITY OF E PROVIDENCE
0036	000	1	WATERMAN	AVE	6740	Overhead	Distribution	Luminaire	LUM HPS RWY 100W	Active	100	65485-54003	S-14	CITY OF E PROVIDENCE
0037	000	2	WATERMAN	AVE	6740	Overhead	Distribution	Luminaire	LUM HPS RWY 250W	Active	250	65485-54003	S-14	CITY OF E PROVIDENCE
0039	000	1	WATERMAN	AVE	6740	Overhead	Distribution	Luminaire	LUM HPS RWY 100W	Active	100	65485-54003	S-14	CITY OF E PROVIDENCE
0041	000	1	WATERMAN	AVE	6740	Overhead	Distribution	Luminaire	LUM HPS RWY 100W	Active	100	65485-54003	S-14	CITY OF E PROVIDENCE
0043	000	1	WATERMAN	AVE	6740	Overhead	Distribution	Luminaire	LUM HPS RWY 100W	Active	100	65485-54003	S-14	CITY OF E PROVIDENCE
0045	000	2	WATERMAN	AVE	6740	Overhead	Distribution	Luminaire	LUM HPS RWY 250W TT	Temp Turn Off	250	65485-54003	S-14	CITY OF E PROVIDENCE
0046	000	1	WATERMAN	AVE	6740	Overhead	Distribution	Luminaire	LUM HPS RWY 100W	Active	100	65485-54003	S-14	CITY OF E PROVIDENCE
0047	000	1	WATERMAN	AVE	6740	Overhead	Distribution	Luminaire	LUM HPS RWY 100W	Active	100	65485-54003	S-14	CITY OF E PROVIDENCE
0049	000	1	WATERMAN	AVE	6740	Overhead	Distribution	Luminaire	LUM HPS RWY 100W	Active	100	65485-54003	S-14	CITY OF E PROVIDENCE
0051	000	2	WATERMAN	AVE	6740	Overhead	Distribution	Luminaire	LUM HPS RWY 250W TT	Temp Turn Off	250	65485-54003	S-14	CITY OF E PROVIDENCE
0052	000	1	WATERMAN	AVE	6740	Overhead	Distribution	Luminaire	LUM HPS RWY 100W	Active	100	65485-54003	S-14	CITY OF E PROVIDENCE
0053	050	1	WATERMAN	AVE	6740	Overhead	Distribution	Luminaire	LUM HPS RWY 100W	Active	100	65485-54003	S-14	CITY OF E PROVIDENCE
0055	000	2	WATERMAN	AVE	6740	Overhead	Distribution	Luminaire	LUM HPS RWY 250W	Active	250	65485-54003	S-14	CITY OF E PROVIDENCE
0061	000	2	WATERMAN	AVE	6740	Overhead	Distribution	Luminaire	LUM HPS RWY 250W TT	Temp Turn Off	250	65485-54003	S-14	CITY OF E PROVIDENCE
0065	000	1	WATERMAN	AVE	6740	Overhead	Distribution	Luminaire	LUM HPS RWY 100W	Active	100	65485-54003	S-14	CITY OF E PROVIDENCE
0067	000	2	WATERMAN	AVE	6740	Overhead	Distribution	Luminaire	LUM HPS RWY 250W TT	Temp Turn Off	250	65485-54003	S-14	CITY OF E PROVIDENCE
0071	000	1	WATERMAN	AVE	6740	Overhead	Distribution	Luminaire	LUM HPS RWY 100W	Active	100	65485-54003	S-14	CITY OF E PROVIDENCE
0073	000	2	WATERMAN	AVE	6740	Overhead	Distribution	Luminaire	LUM HPS RWY 250W TT	Temp Turn Off	250	65485-54003	S-14	CITY OF E PROVIDENCE
0076	000	1	WATERMAN	AVE	6740	Overhead	Distribution	Luminaire	LUM HPS RWY 100W	Active	100	65485-54003	S-14	CITY OF E PROVIDENCE
0077	000	1	WATERMAN	AVE	6740	Overhead	Distribution	Luminaire	LUM HPS RWY 100W	Active	100	65485-54003	S-14	CITY OF E PROVIDENCE
0078	050	1	WATERMAN	AVE	6740	Overhead	Distribution	Luminaire	LUM HPS RWY 250W	Inactive	250	65485-54003	S-14	CITY OF E PROVIDENCE
0079	000	2	WATERMAN	AVE	6740	Overhead	Distribution	Luminaire	LUM HPS RWY 250W TT	Temp Turn Off	250	90426-19008	S-14	CITY OF E PROVIDENCE
0080	000	1	WATERMAN	AVE	6740	Overhead	Distribution	Luminaire	LUM HPS RWY 100W	Active	100	65485-54003	S-14	CITY OF E PROVIDENCE
0081	000	2	WATERMAN	AVE	6740	Overhead	Distribution	Luminaire	LUM HPS RWY 250W TT	Temp Turn Off	250	90426-19008	S-14	CITY OF E PROVIDENCE
0082	000	1	WATERMAN	AVE	6740	Overhead	Distribution	Luminaire	LUM HPS RWY 100W	Active	100	65485-54003	S-14	CITY OF E PROVIDENCE
0084	000	2	WATERMAN	AVE	6740	Overhead	Distribution	Luminaire	LUM HPS RWY 250W TT	Temp Turn Off	250	90426-19008	S-14	CITY OF E PROVIDENCE
0085	000	1	WATERMAN	AVE	6740	Overhead	Distribution	Luminaire	LUM HPS RWY 100W	Active	100	65485-54003	S-14	CITY OF E PROVIDENCE
0087	000	1	WATERMAN	AVE	6740	Overhead	Distribution	Luminaire	LUM HPS RWY 100W	Active	100	65485-54003	S-14	CITY OF E PROVIDENCE
0089	000	1	WATERMAN	AVE	6740	Overhead	Distribution	Luminaire	LUM HPS RWY 100W	Active	100	65485-54003	S-14	CITY OF E PROVIDENCE
0091	000	1	WATERMAN	AVE	6740	Overhead	Distribution	Luminaire	LUM HPS RWY 100W	Active	100	65485-54003	S-14	CITY OF E PROVIDENCE
0093	000	1	WATERMAN	AVE	6740	Overhead	Distribution	Luminaire	LUM HPS RWY 100W	Active	100	65485-54003	S-14	CITY OF E PROVIDENCE
0095	000	1	WATERMAN	AVE	6740	Overhead	Distribution	Luminaire	LUM HPS RWY 100W	Active	100	65485-54003	S-14	CITY OF E PROVIDENCE
0100	000	1	WATERMAN	AVE	6740	Overhead	Distribution	Luminaire	LUM HPS RWY 100W	Active	100	65485-54003	S-14	CITY OF E PROVIDENCE
0111	000	1	WATERMAN	AVE	6740	Overhead	Distribution	Luminaire	LUM HPS RWY 100W	Active	100	65485-54003	S-14	CITY OF E PROVIDENCE
0113	050	2	WATERMAN	AVE	6740	Overhead	Distribution	Luminaire	LUM HPS FLD 250W	Active	250	90439-03009	S-14	E PROVIDENCE POLICE
0120	000	2	WATERMAN	AVE	6740	Overhead	Distribution	Luminaire	LUM HPS RWY 250W TT	Temp Turn Off	250	65485-54003	S-14	CITY OF E PROVIDENCE
0122	000	1	WATERMAN	AVE	6740	Overhead	Distribution	Luminaire	LUM HPS RWY 100W	Active	100	65485-54003	S-14	CITY OF E PROVIDENCE
0124	000	1	WATERMAN	AVE	6740	Overhead	Distribution	Luminaire	LUM HPS RWY 100W	Active	100	65485-54003	S-14	CITY OF E PROVIDENCE
0126	000	1	WATERMAN	AVE	6740	Overhead	Distribution	Luminaire	LUM HPS RWY 100W	Active	100	65485-54003	S-14	CITY OF E PROVIDENCE
0128	000	1	WATERMAN	AVE	6740	Overhead	Distribution	Luminaire	LUM HPS RWY 100W	Active	100	65485-54003	S-14	CITY OF E PROVIDENCE
0129	000	2	WATERMAN	AVE	6740	Overhead	Distribution	Luminaire	LUM HPS RWY 250W TT	Temp Turn Off	250	65485-54003	S-14	CITY OF E PROVIDENCE
0130	000	1	WATERMAN	AVE	6740	Overhead	Distribution	Luminaire	LUM HPS RWY 100W	Active	100	65485-54003	S-14	CITY OF E PROVIDENCE
0131	000	2	WATERMAN	AVE	6740	Overhead	Distribution	Luminaire	LUM HPS RWY 250W TT	Temp Turn Off	250	65485-54003	S-14	CITY OF E PROVIDENCE
0133	000	1	WATERMAN	AVE	6740	Overhead	Distribution	Luminaire	LUM HPS RWY 100W	Active	100	65485-54003	S-14	CITY OF E PROVIDENCE
0134	000	2	WATERMAN	AVE	6740	Overhead	Distribution	Luminaire	LUM HPS RWY 250W TT	Temp Turn Off	250	65485-54003	S-14	CITY OF E PROVIDENCE
0136	000	1	WATERMAN	AVE	6740	Overhead	Distribution	Luminaire	LUM HPS RWY 100W	Active	100	65485-54003	S-14	CITY OF E PROVIDENCE
0139	000	1	WATERMAN	AVE	6740	Overhead	Distribution	Luminaire	LUM HPS RWY 100W	Active	100	65485-54003	S-14	CITY OF E PROVIDENCE

Pole No	Pole Suffix	Light Sequ No	Street Name	Street Suffix	Ngrid Line No	Source Type	Pole Use	Component Type	Bill Print and Tariff Description	Billing Status	Lamp Wattage	Account No	Rate	Customer Name
0141	000	1	WATERMAN	AVE	6740	Overhead	Distribution	Luminaire	LUM HPS RWY 100W	Active	100	65485-54003	S-14	CITY OF E PROVIDENCE
0143	000	1	WATERMAN	AVE	6740	Overhead	Distribution	Luminaire	LUM HPS RWY 100W	Inactive	100	65485-54003	S-14	CITY OF E PROVIDENCE
0145	000	1	WATERMAN	AVE	6740	Overhead	Distribution	Luminaire	LUM HPS RWY 100W	Inactive	100	65485-54003	S-14	CITY OF E PROVIDENCE
0147	000	1	WATERMAN	AVE	6740	Overhead	Distribution	Luminaire	LUM HPS RWY 250W	Inactive	250	65485-54003	S-14	CITY OF E PROVIDENCE
0149	000	1	WATERMAN	AVE	6740	Overhead	Distribution	Luminaire	LUM HPS RWY 100W	Inactive	100	65485-54003	S-14	CITY OF E PROVIDENCE
0151	000	1	WATERMAN	AVE	6740	Overhead	Distribution	Luminaire	LUM HPS RWY 100W	Inactive	100	65485-54003	S-14	CITY OF E PROVIDENCE
0154	000	1	WATERMAN	AVE	6740	Overhead	Distribution	Luminaire	LUM HPS RWY 100W	Inactive	100	65485-54003	S-14	CITY OF E PROVIDENCE
0157	000	1	WATERMAN	AVE	6740	Overhead	Distribution	Luminaire	LUM HPS RWY 250W	Inactive	250	65485-54003	S-14	CITY OF E PROVIDENCE
0158	000	1	WATERMAN	AVE	6740	Overhead	Distribution	Luminaire	LUM HPS RWY 100W	Inactive	100	65485-54003	S-14	CITY OF E PROVIDENCE
1231	000	1	WATERMAN	AVE	6740	Overhead	Distribution	Luminaire	LUM HPS RWY 250W	Inactive	250	65485-54003	S-14	CITY OF E PROVIDENCE
9014	000	2	WATERMAN	AVE	6740	Overhead	Distribution	Luminaire	LUM HPS RWY 250W TT	Temp Turn Off	250	65485-54003	S-14	CITY OF E PROVIDENCE
9018	000	2	WATERMAN	AVE	6740	Overhead	Distribution	Luminaire	LUM HPS RWY 250W TT	Temp Turn Off	250	65485-54003	S-14	CITY OF E PROVIDENCE
9099	000	2	WATERMAN	AVE	6740	Overhead	Distribution	Luminaire	LUM HPS RWY 250W TT	Temp Turn Off	250	65485-54003	S-14	CITY OF E PROVIDENCE
9103	000	1	WATERMAN	AVE	6740	Overhead	Distribution	Luminaire	LUM HPS RWY 100W	Active	100	65485-54003	S-14	CITY OF E PROVIDENCE
9104	000	1	WATERMAN	AVE	6740	Overhead	Distribution	Luminaire	LUM HPS RWY 100W	Active	100	65485-54003	S-14	CITY OF E PROVIDENCE
9107	000	2	WATERMAN	AVE	6740	Overhead	Distribution	Luminaire	LUM HPS RWY 250W TT	Temp Turn Off	250	65485-54003	S-14	CITY OF E PROVIDENCE
9108	000	2	WATERMAN	AVE	6740	Overhead	Distribution	Luminaire	LUM HPS RWY 250W	Active	250	65485-54003	S-14	CITY OF E PROVIDENCE
9113	000	1	WATERMAN	AVE	6740	Overhead	Distribution	Luminaire	LUM HPS RWY 100W	Active	100	65485-54003	S-14	CITY OF E PROVIDENCE
9115	000	1	WATERMAN	AVE	6740	Overhead	Distribution	Luminaire	LUM HPS RWY 100W	Active	100	65485-54003	S-14	CITY OF E PROVIDENCE
9118	000	1	WATERMAN	AVE	6740	Overhead	Distribution	Luminaire	LUM HPS RWY 100W	Active	100	65485-54003	S-14	CITY OF E PROVIDENCE
0006	000	2	WAVERLY	RD	6745	Overhead	Distribution	Luminaire	LUM HPS RWY 50W	Active	50	65485-54003	S-14	CITY OF E PROVIDENCE
0007	000	2	WAVERLY	RD	6745	Overhead	Distribution	Luminaire	LUM HPS RWY 50W	Active	50	65485-54003	S-14	CITY OF E PROVIDENCE
0008	000	2	WAVERLY	RD	6745	Overhead	Distribution	Luminaire	LUM HPS RWY 50W TT	Temp Turn Off	50	65485-54003	S-14	CITY OF E PROVIDENCE
0002	000	2	WAYLAND	ST	6750	Overhead	Distribution	Luminaire	LUM HPS RWY 50W	Active	50	65485-54003	S-14	CITY OF E PROVIDENCE
0001	000	2	WEBSTER	AVE	6755	Overhead	Distribution	Luminaire	LUM HPS RWY 50W TT	Temp Turn Off	50	65485-54003	S-14	CITY OF E PROVIDENCE
0002	000	2	WEBSTER	AVE	6755	Overhead	Distribution	Luminaire	LUM HPS RWY 50W	Active	50	65485-54003	S-14	CITY OF E PROVIDENCE
0004	000	2	WEBSTER	AVE	6755	Overhead	Distribution	Luminaire	LUM HPS RWY 50W	Active	50	65485-54003	S-14	CITY OF E PROVIDENCE
0001	000	2	WEEDEN	AVE	6760	Overhead	Distribution	Luminaire	LUM HPS RWY 50W	Active	50	65485-54003	S-14	CITY OF E PROVIDENCE
0002	000	2	WEEDEN	AVE	6760	Overhead	Distribution	Luminaire	LUM HPS RWY 50W TT	Temp Turn Off	50	65485-54003	S-14	CITY OF E PROVIDENCE
0003	000	2	WEEDEN	AVE	6760	Overhead	Distribution	Luminaire	LUM HPS RWY 50W	Active	50	65485-54003	S-14	CITY OF E PROVIDENCE
0004	000	2	WEEDEN	AVE	6760	Overhead	Distribution	Luminaire	LUM HPS RWY 50W TT	Temp Turn Off	50	65485-54003	S-14	CITY OF E PROVIDENCE
0006	000	2	WEEDEN	AVE	6760	Overhead	Distribution	Luminaire	LUM HPS RWY 50W	Active	50	65485-54003	S-14	CITY OF E PROVIDENCE
0007	000	2	WEEDEN	AVE	6760	Overhead	Distribution	Luminaire	LUM HPS RWY 50W TT	Temp Turn Off	50	65485-54003	S-14	CITY OF E PROVIDENCE
0008	000	2	WEEDEN	AVE	6760	Overhead	Distribution	Luminaire	LUM HPS RWY 50W	Active	50	65485-54003	S-14	CITY OF E PROVIDENCE
0009	000	2	WEEDEN	AVE	6760	Overhead	Distribution	Luminaire	LUM HPS RWY 50W	Active	50	65485-54003	S-14	CITY OF E PROVIDENCE
0010	000	2	WEEDEN	AVE	6760	Overhead	Distribution	Luminaire	LUM HPS RWY 50W TT	Temp Turn Off	50	65485-54003	S-14	CITY OF E PROVIDENCE
0011	000	2	WEEDEN	AVE	6760	Overhead	Distribution	Luminaire	LUM HPS RWY 50W	Active	50	65485-54003	S-14	CITY OF E PROVIDENCE
0012	000	2	WEEDEN	AVE	6760	Overhead	Distribution	Luminaire	LUM HPS RWY 50W TT	Temp Turn Off	50	65485-54003	S-14	CITY OF E PROVIDENCE
0013	000	2	WEEDEN	AVE	6760	Overhead	Distribution	Luminaire	LUM HPS RWY 50W	Active	50	65485-54003	S-14	CITY OF E PROVIDENCE
0014	000	2	WEEDEN	AVE	6760	Overhead	Distribution	Luminaire	LUM HPS RWY 50W TT	Temp Turn Off	50	65485-54003	S-14	CITY OF E PROVIDENCE
0015	000	2	WEEDEN	AVE	6760	Overhead	Distribution	Luminaire	LUM HPS RWY 50W	Active	50	65485-54003	S-14	CITY OF E PROVIDENCE
0016	000	2	WEEDEN	AVE	6760	Overhead	Distribution	Luminaire	LUM HPS RWY 50W TT	Temp Turn Off	50	65485-54003	S-14	CITY OF E PROVIDENCE
0002	000	2	WELFARE	ST	6765	Overhead	Distribution	Luminaire	LUM HPS RWY 50W	Active	50	65485-54003	S-14	CITY OF E PROVIDENCE
0002	000	2	WELLINGTON	ST	6770	Overhead	Distribution	Luminaire	LUM HPS RWY 50W	Active	50	65485-54003	S-14	CITY OF E PROVIDENCE
0004	000	2	WELLINGTON	ST	6770	Overhead	Distribution	Luminaire	LUM HPS RWY 50W	Active	50	65485-54003	S-14	CITY OF E PROVIDENCE
0006	000	2	WELLINGTON	ST	6770	Overhead	Distribution	Luminaire	LUM HPS RWY 50W TT	Temp Turn Off	50	65485-54003	S-14	CITY OF E PROVIDENCE
0002	000	2	WENDELL	ST	6775	Overhead	Distribution	Luminaire	LUM HPS RWY 50W	Active	50	65485-54003	S-14	CITY OF E PROVIDENCE
0004	000	2	WENDELL	ST	6775	Overhead	Distribution	Luminaire	LUM HPS RWY 50W	Active	50	65485-54003	S-14	CITY OF E PROVIDENCE
0006	000	2	WENDELL	ST	6775	Overhead	Distribution	Luminaire	LUM HPS RWY 50W	Active	50	65485-54003	S-14	CITY OF E PROVIDENCE
0001	000	2	WEST	ST	6780	Overhead	Distribution	Luminaire	LUM HPS RWY 50W	Active	50	65485-54003	S-14	CITY OF E PROVIDENCE
0001	000	2	WESTWOOD	AVE	6785	Overhead	Distribution	Luminaire	LUM HPS RWY 50W	Active	50	65485-54003	S-14	CITY OF E PROVIDENCE
0002	000	2	WESTWOOD	AVE	6785	Overhead	Distribution	Luminaire	LUM HPS RWY 50W	Active	50	65485-54003	S-14	CITY OF E PROVIDENCE
0003	000	2	WESTWOOD	AVE	6785	Overhead	Distribution	Luminaire	LUM HPS RWY 50W TT	Temp Turn Off	50	65485-54003	S-14	CITY OF E PROVIDENCE
0005	000	2	WESTWOOD	AVE	6785	Overhead	Distribution	Luminaire	LUM HPS RWY 50W	Active	50	65485-54003	S-14	CITY OF E PROVIDENCE
0001	000	2	WETMORE	AVE	6790	Overhead	Distribution	Luminaire	LUM HPS RWY 50W	Active	50	65485-54003	S-14	CITY OF E PROVIDENCE

Pole No	Pole Suffix	Light Sequ No	Street Name	Street Suffix	Ngrid Line No	Source Type	Pole Use	Component Type	Bill Print and Tariff Description	Billing Status	Lamp Wattage	Account No	Rate	Customer Name
0003	000	2	WETMORE	AVE	6790	Overhead	Distribution	Luminaire	LUM HPS RWY 50W	Active	50	65485-54003	S-14	CITY OF E PROVIDENCE
0004	000	2	WHAT CHEER	AVE	6795	Overhead	Distribution	Luminaire	LUM HPS RWY 50W	Active	50	65485-54003	S-14	CITY OF E PROVIDENCE
0006	000	2	WHAT CHEER	AVE	6795	Overhead	Distribution	Luminaire	LUM HPS RWY 50W	Active	50	65485-54003	S-14	CITY OF E PROVIDENCE
0009	000	2	WHAT CHEER	AVE	6795	Overhead	Distribution	Luminaire	LUM HPS RWY 50W	Active	50	90426-19008	S-14	CITY OF E PROVIDENCE
0002	000	2	WHEELER	AVE	6800	Overhead	Distribution	Luminaire	LUM HPS RWY 50W	Active	50	65485-54003	S-14	CITY OF E PROVIDENCE
0002	000	1	WHELDON	AVE	6805	Overhead	Distribution	Luminaire	LUM HPS RWY 50W	Active	50	65485-54003	S-14	CITY OF E PROVIDENCE
0004	000	1	WHELDON	AVE	6805	Overhead	Distribution	Luminaire	LUM HPS RWY 50W	Active	50	65485-54003	S-14	CITY OF E PROVIDENCE
0006	000	1	WHELDON	AVE	6805	Overhead	Distribution	Luminaire	LUM HPS RWY 50W	Active	50	65485-54003	S-14	CITY OF E PROVIDENCE
0001	000	2	WHIPPLE	AVE	6810	Overhead	Distribution	Luminaire	LUM HPS RWY 50W	Active	50	65485-54003	S-14	CITY OF E PROVIDENCE
0003	000	2	WHIPPLE	AVE	6810	Overhead	Distribution	Luminaire	LUM HPS RWY 50W	Active	50	65485-54003	S-14	CITY OF E PROVIDENCE
0002	000	2	WHITAKER	AVE	6815	Overhead	Distribution	Luminaire	LUM HPS RWY 50W	Active	50	65485-54003	S-14	CITY OF E PROVIDENCE
0004	000	2	WHITAKER	AVE	6815	Overhead	Distribution	Luminaire	LUM HPS RWY 50W	Active	50	65485-54003	S-14	CITY OF E PROVIDENCE
0001	000	2	WHITCOMB	RD	6820	Overhead	Distribution	Luminaire	LUM HPS RWY 50W TT	Temp Turn Off	50	65485-54003	S-14	CITY OF E PROVIDENCE
0003	000	2	WHITCOMB	RD	6820	Overhead	Distribution	Luminaire	LUM HPS RWY 50W TT	Temp Turn Off	50	65485-54003	S-14	CITY OF E PROVIDENCE
0004	000	2	WHITCOMB	RD	6820	Overhead	Distribution	Luminaire	LUM HPS RWY 50W	Active	50	65485-54003	S-14	CITY OF E PROVIDENCE
0005	000	2	WHITCOMB	RD	6820	Overhead	Distribution	Luminaire	LUM HPS RWY 50W	Active	50	65485-54003	S-14	CITY OF E PROVIDENCE
0006	000	2	WHITCOMB	RD	6820	Overhead	Distribution	Luminaire	LUM HPS RWY 50W	Active	50	65485-54003	S-14	CITY OF E PROVIDENCE
0007	000	2	WHITCOMB	RD	6820	Overhead	Distribution	Luminaire	LUM HPS RWY 50W TT	Temp Turn Off	50	65485-54003	S-14	CITY OF E PROVIDENCE
0001	000	2	WHITE	AVE	6825	Overhead	Distribution	Luminaire	LUM HPS RWY 50W	Active	50	65485-54003	S-14	CITY OF E PROVIDENCE
0002	000	2	WHITE	AVE	6825	Overhead	Distribution	Luminaire	LUM HPS RWY 50W TT	Temp Turn Off	50	65485-54003	S-14	CITY OF E PROVIDENCE
0003	000	2	WHITE	AVE	6825	Overhead	Distribution	Luminaire	LUM HPS RWY 50W	Active	50	65485-54003	S-14	CITY OF E PROVIDENCE
0005	000	2	WHITE	AVE	6825	Overhead	Distribution	Luminaire	LUM HPS RWY 50W	Active	50	65485-54003	S-14	CITY OF E PROVIDENCE
0007	000	2	WHITE	AVE	6825	Overhead	Distribution	Luminaire	LUM HPS RWY 50W TT	Temp Turn Off	50	65485-54003	S-14	CITY OF E PROVIDENCE
0008	000	2	WHITE	AVE	6825	Overhead	Distribution	Luminaire	LUM HPS RWY 50W	Active	50	65485-54003	S-14	CITY OF E PROVIDENCE
0009	000	2	WHITE	AVE	6825	Overhead	Distribution	Luminaire	LUM HPS RWY 50W TT	Temp Turn Off	50	65485-54003	S-14	CITY OF E PROVIDENCE
0010	000	2	WHITE	AVE	6825	Overhead	Distribution	Luminaire	LUM HPS RWY 50W	Active	50	65485-54003	S-14	CITY OF E PROVIDENCE
0012	000	2	WHITE	AVE	6825	Overhead	Distribution	Luminaire	LUM HPS RWY 50W	Active	50	65485-54003	S-14	CITY OF E PROVIDENCE
0001	000	2	WHITE SQUADRON	RD	6826	Overhead	Distribution	Luminaire	LUM HPS RWY 50W	Active	50	65485-54003	S-14	CITY OF E PROVIDENCE
0002	000	2	WHITE SQUADRON	RD	6826	Overhead	Distribution	Luminaire	LUM HPS RWY 50W	Active	50	65485-54003	S-14	CITY OF E PROVIDENCE
0003	000	2	WILDWOOD	AVE	6835	Overhead	Distribution	Luminaire	LUM HPS RWY 50W TT	Temp Turn Off	50	65485-54003	S-14	CITY OF E PROVIDENCE
0004	000	2	WILDWOOD	AVE	6835	Overhead	Distribution	Luminaire	LUM HPS RWY 50W	Active	50	65485-54003	S-14	CITY OF E PROVIDENCE
0001	000	1	WILLANN	DR	6830	Overhead	Distribution	Luminaire	LUM HPS RWY 100W	Active	100	65485-54003	S-14	CITY OF E PROVIDENCE
0000	050	2	WILLETT	AVE	6845	Overhead	Distribution	Luminaire	LUM HPS RWY 250W TT	Temp Turn Off	250	65485-54003	S-14	CITY OF E PROVIDENCE
0000	075	2	WILLETT	AVE	6845	Overhead	Distribution	Luminaire	LUM HPS RWY 250W TT	Temp Turn Off	250	65485-54003	S-14	CITY OF E PROVIDENCE
0001	000	1	WILLETT	AVE	6845	Overhead	Distribution	Luminaire	LUM HPS RWY 100W	Active	100	90426-19008	S-14	CITY OF E PROVIDENCE
0003	000	1	WILLETT	AVE	6845	Overhead	Distribution	Luminaire	LUM HPS RWY 100W	Active	100	90426-19008	S-14	CITY OF E PROVIDENCE
0006	000	1	WILLETT	AVE	6845	Overhead	Distribution	Luminaire	LUM HPS RWY 100W	Active	100	90426-19008	S-14	CITY OF E PROVIDENCE
0008	000	1	WILLETT	AVE	6845	Overhead	Distribution	Luminaire	LUM HPS RWY 100W	Active	100	90426-19008	S-14	CITY OF E PROVIDENCE
0010	000	1	WILLETT	AVE	6845	Overhead	Distribution	Luminaire	LUM HPS RWY 100W	Active	100	90426-19008	S-14	CITY OF E PROVIDENCE
0012	000	1	WILLETT	AVE	6845	Overhead	Distribution	Luminaire	LUM HPS RWY 100W	Active	100	90426-19008	S-14	CITY OF E PROVIDENCE
0013	000	2	WILLETT	AVE	6845	Overhead	Distribution	Luminaire	LUM HPS RWY 250W TT	Temp Turn Off	250	65485-54003	S-14	CITY OF E PROVIDENCE
0014	000	1	WILLETT	AVE	6845	Overhead	Distribution	Luminaire	LUM HPS RWY 100W	Active	100	90426-19008	S-14	CITY OF E PROVIDENCE
0014	050	2	WILLETT	AVE	6845	Overhead	Distribution	Luminaire	LUM HPS RWY 250W TT	Temp Turn Off	250	65485-54003	S-14	CITY OF E PROVIDENCE
0015	000	1	WILLETT	AVE	6845	Overhead	Distribution	Luminaire	LUM HPS RWY 100W	Active	100	65485-54003	S-14	CITY OF E PROVIDENCE
0015	075	1	WILLETT	AVE	6845	Overhead	Distribution	Luminaire	LUM HPS RWY 100W	Active	100	65485-54003	S-14	CITY OF E PROVIDENCE
0016	075	1	WILLETT	AVE	6845	Overhead	Distribution	Luminaire	LUM HPS RWY 100W	Active	100	65485-54003	S-14	CITY OF E PROVIDENCE
0017	000	1	WILLETT	AVE	6845	Overhead	Distribution	Luminaire	LUM HPS RWY 100W	Active	100	65485-54003	S-14	CITY OF E PROVIDENCE
0018	000	2	WILLETT	AVE	6845	Overhead	Distribution	Luminaire	LUM HPS RWY 250W TT	Temp Turn Off	250	65485-54003	S-14	CITY OF E PROVIDENCE
0020	000	1	WILLETT	AVE	6845	Overhead	Distribution	Luminaire	LUM HPS RWY 100W	Active	100	65485-54003	S-14	CITY OF E PROVIDENCE
0021	000	2	WILLETT	AVE	6845	Overhead	Distribution	Luminaire	LUM HPS RWY 250W	Active	250	65485-54003	S-14	CITY OF E PROVIDENCE
0022	000	1	WILLETT	AVE	6845	Overhead	Distribution	Luminaire	LUM HPS RWY 100W	Active	100	65485-54003	S-14	CITY OF E PROVIDENCE
0023	000	1	WILLETT	AVE	6845	Overhead	Distribution	Luminaire	LUM HPS RWY 100W	Active	100	65485-54003	S-14	CITY OF E PROVIDENCE
0024	000	1	WILLETT	AVE	6845	Overhead	Distribution	Luminaire	LUM HPS RWY 400W TT	Temp Turn Off	400	65485-54003	S-14	CITY OF E PROVIDENCE
0026	000	1	WILLETT	AVE	6845	Overhead	Distribution	Luminaire	LUM HPS RWY 100W	Active	100	65485-54003	S-14	CITY OF E PROVIDENCE
0027	000	2	WILLETT	AVE	6845	Overhead	Distribution	Luminaire	LUM HPS RWY 100W	Active	100	65485-54003	S-14	CITY OF E PROVIDENCE

Pole No	Pole Suffix	Light Sequ No	Street Name	Street Suffix	Ngrid Line No	Source Type	Pole Use	Component Type	Bill Print and Tariff Description	Billing Status	Lamp Wattage	Account No	Rate	Customer Name
0029	000	1	WILLETT	AVE	6845	Overhead	Distribution	Luminaire	LUM HPS RWY 100W	Active	100	65485-54003	S-14	CITY OF E PROVIDENCE
0038	000	2	WILLETT	AVE	6845	Overhead	Distribution	Luminaire	LUM HPS RWY 250W	Active	250	65485-54003	S-14	CITY OF E PROVIDENCE
0039	000	1	WILLETT	AVE	6845	Overhead	Distribution	Luminaire	LUM HPS RWY 100W	Active	100	65485-54003	S-14	CITY OF E PROVIDENCE
0040	000	1	WILLETT	AVE	6845	Overhead	Distribution	Luminaire	LUM HPS RWY 100W	Active	100	65485-54003	S-14	CITY OF E PROVIDENCE
0056	050	2	WILLETT	AVE	6845	Overhead	Distribution	Luminaire	LUM HPS RWY 250W	Active	250	65485-54003	S-14	CITY OF E PROVIDENCE
0078	000	1	WILLETT	AVE	6845	Overhead	Distribution	Luminaire	LUM HPS RWY 250W	Inactive	250	65485-54003	S-14	CITY OF E PROVIDENCE
0078	035	1	WILLETT	AVE	6845	Overhead	Distribution	Luminaire	LUM HPS RWY 100W	Active	100	65485-54003	S-14	CITY OF E PROVIDENCE
0086	000	2	WILLETT	AVE	6845	Overhead	Distribution	Luminaire	LUM HPS RWY 400W	Active	400	65485-54003	S-14	CITY OF E PROVIDENCE
0088	000	2	WILLETT	AVE	6845	Overhead	Distribution	Luminaire	LUM HPS RWY 250W	Active	250	65485-54003	S-14	CITY OF E PROVIDENCE
9032	000	1	WILLETT	AVE	6845	Overhead	Distribution	Luminaire	LUM HPS RWY 100W	Active	100	65485-54003	S-14	CITY OF E PROVIDENCE
9034	000	1	WILLETT	AVE	6845	Overhead	Distribution	Luminaire	LUM HPS RWY 100W	Active	100	65485-54003	S-14	CITY OF E PROVIDENCE
9036	000	1	WILLETT	AVE	6845	Overhead	Distribution	Luminaire	LUM HPS RWY 100W	Active	100	65485-54003	S-14	CITY OF E PROVIDENCE
9042	000	1	WILLETT	AVE	6845	Overhead	Distribution	Luminaire	LUM HPS RWY 100W	Active	100	65485-54003	S-14	CITY OF E PROVIDENCE
9045	000	1	WILLETT	AVE	6845	Overhead	Distribution	Luminaire	LUM HPS RWY 100W	Active	100	65485-54003	S-14	CITY OF E PROVIDENCE
9047	000	1	WILLETT	AVE	6845	Overhead	Distribution	Luminaire	LUM HPS RWY 100W	Active	100	65485-54003	S-14	CITY OF E PROVIDENCE
9049	000	1	WILLETT	AVE	6845	Overhead	Distribution	Luminaire	LUM HPS RWY 100W	Active	100	65485-54003	S-14	CITY OF E PROVIDENCE
9050	000	1	WILLETT	AVE	6845	Overhead	Distribution	Luminaire	LUM HPS RWY 100W	Active	100	65485-54003	S-14	CITY OF E PROVIDENCE
9052	000	1	WILLETT	AVE	6845	Overhead	Distribution	Luminaire	LUM HPS RWY 100W	Active	100	65485-54003	S-14	CITY OF E PROVIDENCE
9054	000	1	WILLETT	AVE	6845	Overhead	Distribution	Luminaire	LUM HPS RWY 100W	Active	100	65485-54003	S-14	CITY OF E PROVIDENCE
9056	000	1	WILLETT	AVE	6845	Overhead	Distribution	Luminaire	LUM HPS RWY 100W	Active	100	65485-54003	S-14	CITY OF E PROVIDENCE
9058	000	1	WILLETT	AVE	6845	Overhead	Distribution	Luminaire	LUM HPS RWY 100W	Active	100	65485-54003	S-14	CITY OF E PROVIDENCE
9060	000	1	WILLETT	AVE	6845	Overhead	Distribution	Luminaire	LUM HPS RWY 100W	Active	100	65485-54003	S-14	CITY OF E PROVIDENCE
9061	000	1	WILLETT	AVE	6845	Overhead	Distribution	Luminaire	LUM HPS RWY 100W	Active	100	65485-54003	S-14	CITY OF E PROVIDENCE
9062	000	1	WILLETT	AVE	6845	Overhead	Distribution	Luminaire	LUM HPS RWY 100W	Active	100	65485-54003	S-14	CITY OF E PROVIDENCE
9064	000	1	WILLETT	AVE	6845	Overhead	Distribution	Luminaire	LUM HPS RWY 100W	Active	100	65485-54003	S-14	CITY OF E PROVIDENCE
9065	000	1	WILLETT	AVE	6845	Overhead	Distribution	Luminaire	LUM HPS RWY 100W	Active	100	65485-54003	S-14	CITY OF E PROVIDENCE
9067	000	1	WILLETT	AVE	6845	Overhead	Distribution	Luminaire	LUM HPS RWY 100W	Active	100	65485-54003	S-14	CITY OF E PROVIDENCE
9068	000	1	WILLETT	AVE	6845	Overhead	Distribution	Luminaire	LUM HPS RWY 100W	Active	100	65485-54003	S-14	CITY OF E PROVIDENCE
9070	000	2	WILLETT	AVE	6845	Overhead	Distribution	Luminaire	LUM HPS RWY 100W	Active	100	65485-54003	S-14	CITY OF E PROVIDENCE
9071	000	2	WILLETT	AVE	6845	Overhead	Distribution	Luminaire	LUM HPS RWY 100W	Active	100	65485-54003	S-14	CITY OF E PROVIDENCE
9073	000	2	WILLETT	AVE	6845	Overhead	Distribution	Luminaire	LUM HPS RWY 100W	Active	100	65485-54003	S-14	CITY OF E PROVIDENCE
9073	000	3	WILLETT	AVE	6845	Overhead	Distribution	Luminaire	LUM HPS RWY 250W	Active	250	65485-54003	S-14	CITY OF E PROVIDENCE
9075	000	1	WILLETT	AVE	6845	Overhead	Distribution	Luminaire	LUM HPS RWY 100W	Active	100	65485-54003	S-14	CITY OF E PROVIDENCE
9077	000	1	WILLETT	AVE	6845	Overhead	Distribution	Luminaire	LUM HPS RWY 100W	Active	100	65485-54003	S-14	CITY OF E PROVIDENCE
9079	000	1	WILLETT	AVE	6845	Overhead	Distribution	Luminaire	LUM HPS RWY 100W	Active	100	65485-54003	S-14	CITY OF E PROVIDENCE
9081	000	1	WILLETT	AVE	6845	Overhead	Distribution	Luminaire	LUM HPS RWY 100W	Active	100	65485-54003	S-14	CITY OF E PROVIDENCE
9084	000	1	WILLETT	AVE	6845	Overhead	Distribution	Luminaire	LUM HPS RWY 100W	Active	100	65485-54003	S-14	CITY OF E PROVIDENCE
0002	000	1	WILLIAMS	AVE	6850	Overhead	Distribution	Luminaire	LUM HPS RWY 50W	Active	50	65485-54003	S-14	CITY OF E PROVIDENCE
0004	000	2	WILLIAMS	AVE	6850	Overhead	Distribution	Luminaire	LUM HPS RWY 50W	Active	50	65485-54003	S-14	CITY OF E PROVIDENCE
0006	000	2	WILLIAMS	AVE	6850	Overhead	Distribution	Luminaire	LUM HPS RWY 50W	Active	50	65485-54003	S-14	CITY OF E PROVIDENCE
0008	000	2	WILLIAMS	AVE	6850	Overhead	Distribution	Luminaire	LUM HPS RWY 50W	Active	50	65485-54003	S-14	CITY OF E PROVIDENCE
0010	000	2	WILLIAMS	AVE	6850	Overhead	Distribution	Luminaire	LUM HPS RWY 50W	Active	50	65485-54003	S-14	CITY OF E PROVIDENCE
0012	000	2	WILLIAMS	AVE	6850	Overhead	Distribution	Luminaire	LUM HPS RWY 50W	Active	50	65485-54003	S-14	CITY OF E PROVIDENCE
0014	000	2	WILLIAMS	AVE	6850	Overhead	Distribution	Luminaire	LUM HPS RWY 50W	Active	50	65485-54003	S-14	CITY OF E PROVIDENCE
0015	000	2	WILLIAMS	AVE	6850	Overhead	Distribution	Luminaire	LUM HPS RWY 50W	Active	50	65485-54003	S-14	CITY OF E PROVIDENCE
0001	000	2	WILLOW	ST	6855	Overhead	Distribution	Luminaire	LUM HPS RWY 50W TT	Temp Turn Off	50	65485-54003	S-14	CITY OF E PROVIDENCE
0007	000	2	WILLOW	ST	6855	Overhead	Distribution	Luminaire	LUM HPS RWY 50W TT	Temp Turn Off	50	65485-54003	S-14	CITY OF E PROVIDENCE
0002	000	2	WILMARTH	AVE	6860	Overhead	Distribution	Luminaire	LUM HPS RWY 50W	Active	50	65485-54003	S-14	CITY OF E PROVIDENCE
0003	000	2	WILMARTH	AVE	6860	Overhead	Distribution	Luminaire	LUM HPS RWY 50W	Active	50	65485-54003	S-14	CITY OF E PROVIDENCE
0005	000	2	WILMARTH	AVE	6860	Overhead	Distribution	Luminaire	LUM HPS RWY 50W	Active	50	65485-54003	S-14	CITY OF E PROVIDENCE
0008	000	2	WILMARTH	AVE	6860	Overhead	Distribution	Luminaire	LUM HPS RWY 50W	Active	50	65485-54003	S-14	CITY OF E PROVIDENCE
0009	000	1	WILMARTH	AVE	6860	Overhead	Distribution	Luminaire	LUM HPS RWY 50W	Active	50	65485-54003	S-14	CITY OF E PROVIDENCE
0011	000	2	WILMARTH	AVE	6860	Overhead	Distribution	Luminaire	LUM HPS RWY 50W	Active	50	65485-54003	S-14	CITY OF E PROVIDENCE
0013	000	2	WILMARTH	AVE	6860	Overhead	Distribution	Luminaire	LUM HPS RWY 50W	Active	50	65485-54003	S-14	CITY OF E PROVIDENCE
0015	000	2	WILMARTH	AVE	6860	Overhead	Distribution	Luminaire	LUM HPS RWY 50W	Active	50	65485-54003	S-14	CITY OF E PROVIDENCE

Pole No	Pole Suffix	Light Sequ No	Street Name	Street Suffix	Ngrid Line No	Source Type	Pole Use	Component Type	Bill Print and Tariff Description	Billing Status	Lamp Wattage	Account No	Rate	Customer Name
0016	000	2	WILMARTH	AVE	6860	Overhead	Distribution	Luminaire	LUM HPS RWY 50W	Active	50	65485-54003	S-14	CITY OF E PROVIDENCE
0017	000	2	WILMARTH	AVE	6860	Overhead	Distribution	Luminaire	LUM HPS RWY 50W TT	Temp Turn Off	50	65485-54003	S-14	CITY OF E PROVIDENCE
0019	000	2	WILMARTH	AVE	6860	Overhead	Distribution	Luminaire	LUM HPS RWY 50W	Active	50	65485-54003	S-14	CITY OF E PROVIDENCE
0021	000	2	WILMARTH	AVE	6860	Overhead	Distribution	Luminaire	LUM HPS RWY 50W	Active	50	65485-54003	S-14	CITY OF E PROVIDENCE
0023	000	2	WILMARTH	AVE	6860	Overhead	Distribution	Luminaire	LUM HPS RWY 50W	Active	50	65485-54003	S-14	CITY OF E PROVIDENCE
0003	000	2	WILSON	AVE	6865	Overhead	Distribution	Luminaire	LUM HPS RWY 100W	Active	100	65485-54003	S-14	CITY OF E PROVIDENCE
0005	000	2	WILSON	AVE	6865	Overhead	Distribution	Luminaire	LUM HPS RWY 100W	Active	100	65485-54003	S-14	CITY OF E PROVIDENCE
0006	000	2	WILSON	AVE	6865	Overhead	Distribution	Luminaire	LUM HPS RWY 100W TT	Temp Turn Off	100	90426-19008	S-14	CITY OF E PROVIDENCE
0007	000	2	WILSON	AVE	6865	Overhead	Distribution	Luminaire	LUM HPS RWY 100W	Active	100	65485-54003	S-14	CITY OF E PROVIDENCE
0008	000	2	WILSON	AVE	6865	Overhead	Distribution	Luminaire	LUM HPS RWY 100W TT	Temp Turn Off	100	65485-54003	S-14	CITY OF E PROVIDENCE
0009	000	1	WILSON	AVE	6865	Overhead	Distribution	Luminaire	LUM HPS RWY 50W	Active	50	65485-54003	S-14	CITY OF E PROVIDENCE
0010	000	1	WILSON	AVE	6865	Overhead	Distribution	Luminaire	LUM HPS RWY 50W TT	Temp Turn Off	50	65485-54003	S-14	CITY OF E PROVIDENCE
0012	000	2	WILSON	AVE	6865	Overhead	Distribution	Luminaire	LUM HPS RWY 100W	Active	100	65485-54003	S-14	CITY OF E PROVIDENCE
0014	050	1	WILSON	AVE	6865	Overhead	Distribution	Luminaire	LUM HPS RWY 50W	Active	50	65485-54003	S-14	CITY OF E PROVIDENCE
0015	035	2	WILSON	AVE	6865	Overhead	Distribution	Luminaire	LUM HPS RWY 100W	Active	100	65485-54003	S-14	CITY OF E PROVIDENCE
0016	000	2	WILSON	AVE	6865	Overhead	Distribution	Luminaire	LUM HPS RWY 50W	Active	50	90426-19008	S-14	CITY OF E PROVIDENCE
0017	000	2	WILSON	AVE	6865	Overhead	Distribution	Luminaire	LUM HPS RWY 100W	Active	100	65485-54003	S-14	CITY OF E PROVIDENCE
0017	035	2	WILSON	AVE	6865	Overhead	Distribution	Luminaire	LUM HPS RWY 100W	Active	100	65485-54003	S-14	CITY OF E PROVIDENCE
0020	000	2	WILSON	AVE	6865	Overhead	Distribution	Luminaire	LUM HPS RWY 100W	Active	100	65485-54003	S-14	CITY OF E PROVIDENCE
0022	000	2	WILSON	AVE	6865	Overhead	Distribution	Luminaire	LUM HPS RWY 100W	Active	100	65485-54003	S-14	CITY OF E PROVIDENCE
0023	050	2	WILSON	AVE	6865	Overhead	Distribution	Luminaire	LUM HPS RWY 100W	Active	100	65485-54003	S-14	CITY OF E PROVIDENCE
0024	000	1	WILSON	AVE	6865	Overhead	Distribution	Luminaire	LUM HPS RWY 50W	Active	50	65485-54003	S-14	CITY OF E PROVIDENCE
0026	000	2	WILSON	AVE	6865	Overhead	Distribution	Luminaire	LUM HPS RWY 100W	Active	100	65485-54003	S-14	CITY OF E PROVIDENCE
0028	000	2	WILSON	AVE	6865	Overhead	Distribution	Luminaire	LUM HPS RWY 100W	Active	100	65485-54003	S-14	CITY OF E PROVIDENCE
0030	000	2	WILSON	AVE	6865	Overhead	Distribution	Luminaire	LUM HPS RWY 50W	Active	50	65485-54003	S-14	CITY OF E PROVIDENCE
0032	000	2	WILSON	AVE	6865	Overhead	Distribution	Luminaire	LUM HPS RWY 50W	Active	50	65485-54003	S-14	CITY OF E PROVIDENCE
0034	000	2	WILSON	AVE	6865	Overhead	Distribution	Luminaire	LUM HPS RWY 50W	Active	50	65485-54003	S-14	CITY OF E PROVIDENCE
0036	000	2	WILSON	AVE	6865	Overhead	Distribution	Luminaire	LUM HPS RWY 50W	Active	50	65485-54003	S-14	CITY OF E PROVIDENCE
0038	000	2	WILSON	AVE	6865	Overhead	Distribution	Luminaire	LUM HPS RWY 250W	Active	250	65485-54003	S-14	CITY OF E PROVIDENCE
0039	000	2	WILSON	AVE	6865	Overhead	Distribution	Luminaire	LUM HPS RWY 100W	Active	100	65485-54003	S-14	CITY OF E PROVIDENCE
0041	000	2	WILSON	AVE	6865	Overhead	Distribution	Luminaire	LUM HPS RWY 250W	Active	250	65485-54003	S-14	CITY OF E PROVIDENCE
0002	000	2	WINDHURST	AVE	6875	Overhead	Distribution	Luminaire	LUM HPS RWY 100W	Active	100	90426-19008	S-14	CITY OF E PROVIDENCE
0004	000	2	WINDHURST	AVE	6875	Overhead	Distribution	Luminaire	LUM HPS RWY 50W	Active	50	65485-54003	S-14	CITY OF E PROVIDENCE
0001	000	2	WINGATE	RD	6880	Overhead	Distribution	Luminaire	LUM HPS RWY 50W	Active	50	65485-54003	S-14	CITY OF E PROVIDENCE
0002	000	2	WINGATE	RD	6880	Overhead	Distribution	Luminaire	LUM HPS RWY 50W	Active	50	65485-54003	S-14	CITY OF E PROVIDENCE
0003	000	2	WINSLOW	ST	6885	Overhead	Distribution	Luminaire	LUM HPS RWY 50W	Active	50	65485-54003	S-14	CITY OF E PROVIDENCE
0005	000	2	WINSLOW	ST	6885	Overhead	Distribution	Luminaire	LUM HPS RWY 50W	Active	50	65485-54003	S-14	CITY OF E PROVIDENCE
0007	000	2	WINSLOW	ST	6885	Overhead	Distribution	Luminaire	LUM HPS RWY 50W	Active	50	65485-54003	S-14	CITY OF E PROVIDENCE
0009	000	2	WINSLOW	ST	6885	Overhead	Distribution	Luminaire	LUM HPS RWY 50W	Active	50	65485-54003	S-14	CITY OF E PROVIDENCE
0011	000	2	WINSLOW	ST	6885	Overhead	Distribution	Luminaire	LUM HPS RWY 50W	Active	50	65485-54003	S-14	CITY OF E PROVIDENCE
0002	000	2	WINSOR	ST	6890	Overhead	Distribution	Luminaire	LUM HPS RWY 50W	Active	50	65485-54003	S-14	CITY OF E PROVIDENCE
0004	000	2	WINSOR	ST	6890	Overhead	Distribution	Luminaire	LUM HPS RWY 50W	Active	50	65485-54003	S-14	CITY OF E PROVIDENCE
0006	000	2	WINSOR	ST	6890	Overhead	Distribution	Luminaire	LUM HPS RWY 50W	Active	50	65485-54003	S-14	CITY OF E PROVIDENCE
0002	000	2	WINTER HARBOR	AVE	6895	Overhead	Distribution	Luminaire	LUM HPS RWY 50W TT	Temp Turn Off	50	65485-54003	S-14	CITY OF E PROVIDENCE
0003	000	2	WINTER HARBOR	AVE	6895	Overhead	Distribution	Luminaire	LUM HPS RWY 50W	Active	50	65485-54003	S-14	CITY OF E PROVIDENCE
0002	000	2	WINTHROP	ST	6900	Overhead	Distribution	Luminaire	LUM HPS RWY 50W	Active	50	65485-54003	S-14	CITY OF E PROVIDENCE
0004	000	2	WINTHROP	ST	6900	Overhead	Distribution	Luminaire	LUM HPS RWY 50W	Active	50	65485-54003	S-14	CITY OF E PROVIDENCE
0006	000	2	WINTHROP	ST	6900	Overhead	Distribution	Luminaire	LUM HPS RWY 50W	Active	50	65485-54003	S-14	CITY OF E PROVIDENCE
0008	000	2	WINTHROP	ST	6900	Overhead	Distribution	Luminaire	LUM HPS RWY 50W	Active	50	65485-54003	S-14	CITY OF E PROVIDENCE
0010	000	2	WINTHROP	ST	6900	Overhead	Distribution	Luminaire	LUM HPS RWY 50W	Active	50	65485-54003	S-14	CITY OF E PROVIDENCE
0002	000	2	WOBURN	RD	6905	Overhead	Distribution	Luminaire	LUM HPS RWY 50W	Active	50	65485-54003	S-14	CITY OF E PROVIDENCE
0004	000	2	WOBURN	RD	6905	Overhead	Distribution	Luminaire	LUM HPS RWY 50W	Active	50	65485-54003	S-14	CITY OF E PROVIDENCE
0005	000	0	WOOD HOLLOW	DR	3054	Underground	Street Lighting	Pole	POLE FIBER PT <25	Inactive	0	65485-54003	S-14	CITY OF E PROVIDENCE
0005	000	2	WOOD HOLLOW	DR	3054	Underground	Street Lighting	Luminaire	LUM HPS POST 100W	Inactive	100	65485-54003	S-14	CITY OF E PROVIDENCE
0006	000	0	WOOD HOLLOW	DR	3054	Underground	Street Lighting	Pole	POLE FIBER PT <25	Inactive	0	65485-54003	S-14	CITY OF E PROVIDENCE

Pole No	Pole Suffix	Light Sequ No	Street Name	Street Suffix	Ngrid Line No	Source Type	Pole Use	Component Type	Bill Print and Tariff Description	Billing Status	Lamp Wattage	Account No	Rate	Customer Name
0006	000	2	WOOD HOLLOW	DR	3054	Underground	Street Lighting	Luminaire	LUM HPS POST 100W	Inactive	100	65485-54003	S-14	CITY OF E PROVIDENCE
0007	000	0	WOOD HOLLOW	DR	3054	Underground	Street Lighting	Pole	POLE FIBER PT <25	Active	0	65485-54003	S-14	CITY OF E PROVIDENCE
0007	000	1	WOOD HOLLOW	DR	3054	Underground	Street Lighting	Luminaire	LUM HPS POST 100W	Active	100	65485-54003	S-14	CITY OF E PROVIDENCE
0001	000	2	WOODBINE	ST	6910	Overhead	Distribution	Luminaire	LUM HPS RWY 50W	Active	50	65485-54003	S-14	CITY OF E PROVIDENCE
0002	000	2	WOODBINE	ST	6910	Overhead	Distribution	Luminaire	LUM HPS RWY 50W TT	Temp Turn Off	50	65485-54003	S-14	CITY OF E PROVIDENCE
0003	000	2	WOODBINE	ST	6910	Overhead	Distribution	Luminaire	LUM HPS RWY 50W	Active	50	65485-54003	S-14	CITY OF E PROVIDENCE
0005	000	2	WOODBINE	ST	6910	Overhead	Distribution	Luminaire	LUM HPS RWY 50W	Active	50	65485-54003	S-14	CITY OF E PROVIDENCE
0007	000	2	WOODBINE	ST	6910	Overhead	Distribution	Luminaire	LUM HPS RWY 50W	Active	50	65485-54003	S-14	CITY OF E PROVIDENCE
0008	000	2	WOODBINE	ST	6910	Overhead	Distribution	Luminaire	LUM HPS RWY 50W	Active	50	65485-54003	S-14	CITY OF E PROVIDENCE
0009	000	2	WOODBINE	ST	6910	Overhead	Distribution	Luminaire	LUM HPS RWY 50W	Active	50	90426-19008	S-14	CITY OF E PROVIDENCE
0010	050	2	WOODBINE	ST	6910	Overhead	Distribution	Luminaire	LUM HPS RWY 50W	Active	50	65485-54003	S-14	CITY OF E PROVIDENCE
0011	000	2	WOODBINE	ST	6910	Overhead	Distribution	Luminaire	LUM HPS RWY 50W	Active	50	65485-54003	S-14	CITY OF E PROVIDENCE
0001	000	2	WOODCLIFFE	AVE	6915	Overhead	Distribution	Luminaire	LUM HPS RWY 50W	Active	50	90426-19008	S-14	CITY OF E PROVIDENCE
0002	000	2	WOODCLIFFE	AVE	6915	Overhead	Distribution	Luminaire	LUM HPS RWY 50W	Active	50	90426-19008	S-14	CITY OF E PROVIDENCE
0002	000	2	WOODCREST	DR	6920	Overhead	Distribution	Luminaire	LUM HPS RWY 50W	Active	50	65485-54003	S-14	CITY OF E PROVIDENCE
0004	000	2	WOODCREST	DR	6920	Overhead	Distribution	Luminaire	LUM HPS RWY 50W	Active	50	65485-54003	S-14	CITY OF E PROVIDENCE
0006	000	2	WOODCREST	DR	6920	Overhead	Distribution	Luminaire	LUM HPS RWY 50W TT	Temp Turn Off	50	65485-54003	S-14	CITY OF E PROVIDENCE
0001	000	2	WOODLAND	AVE	6925	Overhead	Distribution	Luminaire	LUM HPS RWY 50W	Active	50	65485-54003	S-14	CITY OF E PROVIDENCE
0002	000	2	WOODLAND	AVE	6925	Overhead	Distribution	Luminaire	LUM HPS RWY 50W	Active	50	65485-54003	S-14	CITY OF E PROVIDENCE
0003	000	2	WOODLAND	AVE	6925	Overhead	Distribution	Luminaire	LUM HPS RWY 50W	Active	50	65485-54003	S-14	CITY OF E PROVIDENCE
0004	000	2	WOODLAND	AVE	6925	Overhead	Distribution	Luminaire	LUM HPS RWY 50W TT	Temp Turn Off	50	65485-54003	S-14	CITY OF E PROVIDENCE
0006	000	2	WOODLAND	AVE	6925	Overhead	Distribution	Luminaire	LUM HPS RWY 50W	Active	50	65485-54003	S-14	CITY OF E PROVIDENCE
0009	000	2	WOODLAND	AVE	6925	Overhead	Distribution	Luminaire	LUM HPS RWY 50W	Active	50	65485-54003	S-14	CITY OF E PROVIDENCE
0010	000	2	WOODLAND	AVE	6925	Overhead	Distribution	Luminaire	LUM HPS RWY 50W	Active	50	65485-54003	S-14	CITY OF E PROVIDENCE
0001	000	2	WOODWARD	AVE	6930	Overhead	Distribution	Luminaire	LUM HPS RWY 50W	Active	50	65485-54003	S-14	CITY OF E PROVIDENCE
0003	000	2	WOODWARD	AVE	6930	Overhead	Distribution	Luminaire	LUM HPS RWY 50W	Active	50	65485-54003	S-14	CITY OF E PROVIDENCE
0005	000	2	WOODWARD	AVE	6930	Overhead	Distribution	Luminaire	LUM HPS RWY 50W	Active	50	65485-54003	S-14	CITY OF E PROVIDENCE
0007	000	2	WOODWARD	AVE	6930	Overhead	Distribution	Luminaire	LUM HPS RWY 50W TT	Temp Turn Off	50	65485-54003	S-14	CITY OF E PROVIDENCE
0008	000	2	WOODWARD	AVE	6930	Overhead	Distribution	Luminaire	LUM HPS RWY 50W	Active	50	65485-54003	S-14	CITY OF E PROVIDENCE
0009	000	2	WOODWARD	AVE	6930	Overhead	Distribution	Luminaire	LUM HPS RWY 50W	Active	50	65485-54003	S-14	CITY OF E PROVIDENCE
0011	000	2	WOODWARD	AVE	6930	Overhead	Distribution	Luminaire	LUM HPS RWY 50W	Active	50	65485-54003	S-14	CITY OF E PROVIDENCE
0013	000	2	WOODWARD	AVE	6930	Overhead	Distribution	Luminaire	LUM HPS RWY 50W	Active	50	65485-54003	S-14	CITY OF E PROVIDENCE
0015	000	2	WOODWARD	AVE	6930	Overhead	Distribution	Luminaire	LUM HPS RWY 50W	Active	50	65485-54003	S-14	CITY OF E PROVIDENCE
0017	000	2	WOODWARD	AVE	6930	Overhead	Distribution	Luminaire	LUM HPS RWY 50W	Active	50	65485-54003	S-14	CITY OF E PROVIDENCE
0018	000	2	WOODWARD	AVE	6930	Overhead	Distribution	Luminaire	LUM HPS RWY 50W TT	Temp Turn Off	50	65485-54003	S-14	CITY OF E PROVIDENCE
0019	000	2	WOODWARD	AVE	6930	Overhead	Distribution	Luminaire	LUM HPS RWY 50W	Active	50	65485-54003	S-14	CITY OF E PROVIDENCE
0021	000	1	WOODWARD	AVE	6930	Overhead	Distribution	Luminaire	LUM HPS RWY 50W	Active	50	65485-54003	S-14	CITY OF E PROVIDENCE
0023	000	2	WOODWARD	AVE	6930	Overhead	Distribution	Luminaire	LUM HPS RWY 50W TT	Temp Turn Off	50	65485-54003	S-14	CITY OF E PROVIDENCE
0024	000	2	WOODWARD	AVE	6930	Overhead	Distribution	Luminaire	LUM HPS RWY 50W	Active	50	65485-54003	S-14	CITY OF E PROVIDENCE
0026	000	2	WOODWARD	AVE	6930	Overhead	Distribution	Luminaire	LUM HPS RWY 50W	Active	50	65485-54003	S-14	CITY OF E PROVIDENCE
0028	000	2	WOODWARD	AVE	6930	Overhead	Distribution	Luminaire	LUM HPS RWY 50W	Active	50	65485-54003	S-14	CITY OF E PROVIDENCE
0030	000	2	WOODWARD	AVE	6930	Overhead	Distribution	Luminaire	LUM HPS RWY 50W	Active	50	65485-54003	S-14	CITY OF E PROVIDENCE
0032	000	2	WOODWARD	AVE	6930	Overhead	Distribution	Luminaire	LUM HPS RWY 50W	Active	50	65485-54003	S-14	CITY OF E PROVIDENCE
0034	000	2	WOODWARD	AVE	6930	Overhead	Distribution	Luminaire	LUM HPS RWY 50W	Active	50	65485-54003	S-14	CITY OF E PROVIDENCE
0036	000	2	WOODWARD	AVE	6930	Overhead	Distribution	Luminaire	LUM HPS RWY 100W	Active	100	65485-54003	S-14	CITY OF E PROVIDENCE
0037	000	2	WOODWARD	AVE	6930	Overhead	Distribution	Luminaire	LUM HPS RWY 50W TT	Temp Turn Off	50	65485-54003	S-14	CITY OF E PROVIDENCE
0038	000	2	WOODWARD	AVE	6930	Overhead	Distribution	Luminaire	LUM HPS RWY 50W	Active	50	65485-54003	S-14	CITY OF E PROVIDENCE
0002	000	2	WORCESTER	AVE	6935	Overhead	Distribution	Luminaire	LUM HPS RWY 50W	Active	50	65485-54003	S-14	CITY OF E PROVIDENCE
0003	000	2	WORCESTER	AVE	6935	Overhead	Distribution	Luminaire	LUM HPS RWY 50W TT	Temp Turn Off	50	65485-54003	S-14	CITY OF E PROVIDENCE
0005	000	2	WORCESTER	AVE	6935	Overhead	Distribution	Luminaire	LUM HPS RWY 50W	Active	50	65485-54003	S-14	CITY OF E PROVIDENCE
0006	000	2	WORCESTER	AVE	6935	Overhead	Distribution	Luminaire	LUM HPS RWY 50W	Active	50	90426-19008	S-14	CITY OF E PROVIDENCE
0007	000	2	WORCESTER	AVE	6935	Overhead	Distribution	Luminaire	LUM HPS RWY 50W TT	Temp Turn Off	50	65485-54003	S-14	CITY OF E PROVIDENCE
0001	000	2	WYNNE	DR	6940	Overhead	Distribution	Luminaire	LUM HPS RWY 50W TT	Temp Turn Off	50	90426-19008	S-14	CITY OF E PROVIDENCE
0002	000	2	WYNNE	DR	6940	Overhead	Distribution	Luminaire	LUM HPS RWY 50W	Active	50	65485-54003	S-14	CITY OF E PROVIDENCE
0002	000	2	YALE	AVE	6945	Overhead	Distribution	Luminaire	LUM HPS RWY 50W	Active	50	65485-54003	S-14	CITY OF E PROVIDENCE

Pole No	Pole Suffix	Light Sequ No	Street Name	Street Suffix	Ngrid Line No	Source Type	Pole Use	Component Type	Bill Print and Tariff Description	Billing Status	Lamp Wattage	Account No	Rate	Customer Name
0001	000	2	YURO	ST	6950	Overhead	Distribution	Luminaire	LUM HPS RWY 50W	Active	50	65485-54003	S-14	CITY OF E PROVIDENCE

As described in RFP 16-019, Bidders may submit up to two (2) price proposals representing two (2) equipment options for the LED conversion; up to two (2) options for smart controls; and one (1) price for long life photocells. In all cases, Option 1 shall be the Bidders preferred option.

The bidder shall specify bid price in both words and figures. All words and figures shall be in ink or typed. In case of a discrepancy between the written words and those in figures, the written word shall govern.

and the Office of Energy Resources equipment incentives as well as meet the specifications defined in Appendices G and H.

Quotes for materials for additional streetlights to be provided by the Contractor during the contract period upon request and specified by the City. Cost of materials subject to a maximum mark-up of 10%.

Having examined RFP # 16-019, we propose to enter into a contract to perform services per the bid specifications for the costs listed herein:

Name of Proposer: _____
Date: _____
Address: _____
Authorized Signature: _____
Print Name and Title: _____

Pursuant to and in compliance with the Cities' Request for Streetlight Conversion and Maintenance Services, the undersigned, unless explicitly noted, hereby offers to furnish Labor and Materials as follows. Base Bid pricing shall include all costs to complete each streetlight installation including but not limited to removal and disposal of existing units, installation of LED luminaires with in-line fuse, and any other incidental work. Pricing offered must be inclusive of all costs to complete all work as required under the Price Agreement, including but not limited to material costs, labor costs, overhead costs, cost of providing lighting pilot, inventory development, testing, transportation, arrow board, signs, branch trimming as needed, software, reporting, fees, etc. Proposal shall also include a separate line item for pricing of smart controls (up to two options), installed concurrently with the LED lighting installation and a photocell alternative as specified in the RFP.

- Pricing proposed or negotiated will be incorporated into the awarded Price Agreement.
- The City does not pay any taxes; therefore, do not include taxes in your pricing.

Please complete all sections.

A1: Base Bid: Pricing for Overhead Streetlights, Installed: Proposed New LED Luminaires (including In-Line Fuses)

Proposed LED Luminaires: Overhead (Installed)*

Item No.	Existing Fixture	Description (incl. wattage)	Manufacturer	Model #	Manufact. Warranty (Years)	Est. Total Qty.	Unit	Unit Price	Extended Price
1	250W HPS Flood					14	Each	$	$
2	400W HPS Flood					9	Each	$	$
3	100W HPS Post					42	Each	$	$
4	50W HPS Post					8	Each	$	$
5	100W HPS Roadway					797	Each	$	$
6	100W HPS Roadway - Temp. Turn Off					98	Each	$	$
7	150W HPS Roadway					1	Each	$	$
8	250W HPS Roadway					148	Each	$	$
9	250W HPS Roadway - Temp. Turn Off					188	Each	$	$
10	400W HPS Roadway					1	Each	$	$
11	400W HPS Roadway - Temp. Turn Off					10	Each	$	$
12	50W HPS Roadway					3012	Each	$	$
13	50W HPS Roadway - Temp. Turn Off					629	Each	$	$
14	105W INC Roadway - Temp. Turn Off					1	Each	$	$
15	100W Mercury Vapor Roadway					2	Each	$	$
16	100W Mercury Vapor Roadway - Temp. Turn Off					2	Each	$	$
17	175W Mercury Vapor Roadway					1	Each	$	$
18	400W Mercury Vapor Roadway					1	Each	$	$
						4964			

*Pricing shall include all costs related to installation, including in-line fuse (labor and materials).

A2: Unit Pricing: Overhead Streetlights: Pricing for #10 AWG Wiring Installation (where required)

Item No.	Existing Fixture	Item	Unit	Per-Unit Price Adjustment
19	N/A	Flat fee: #10 AWG Wiring Installation (time and materials) where existing street light conductors or circuits are insufficient	Each, as required	$

A OPTION: LED STREETLIGHTS, INSTALLED: OVERHEAD AND DECORATIVE

TOTAL BASE BID (PROPOSAL #___ of ___):

Enter Total: $ _____

In Words: _____

Authorized Signature: _____

Date: _____

B1: Base Bid: Pricing for Overhead Streetlights, Installed: Proposed New LED Luminaires (including In-Line Fuses)

Proposed LED Luminaires: Overhead (Installed)*

Item No.	Existing Fixture	Description (incl. wattage)	Manufacturer	Model #	Manufact. Warranty (Years)	Est. Total Qty.	Unit	Unit Price	Extended Price
1	250W HPS Flood					14	Each	$	$
2	400W HPS Flood					9	Each	$	$
3	100W HPS Post					42	Each	$	$
4	50W HPS Post					8	Each	$	$
5	100W HPS Roadway					797	Each	$	$
6	100W HPS Roadway - Temp. Turn Off					98	Each	$	$
7	150W HPS Roadway					1	Each	$	$
8	250W HPS Roadway					148	Each	$	$
9	250W HPS Roadway - Temp. Turn Off					188	Each	$	$
10	400W HPS Roadway					1	Each	$	$
11	400W HPS Roadway - Temp. Turn Off					10	Each	$	$
12	50W HPS Roadway					3012	Each	$	$
13	50W HPS Roadway - Temp. Turn Off					629	Each	$	$
14	105W INC Roadway - Temp. Turn Off					1	Each	$	$
15	100W Mercury Vapor Roadway					2	Each	$	$
16	100W Mercury Vapor Roadway - Temp. Turn Off					2	Each	$	$

17	175W Mercury Vapor Roadway					1	Each	$	$
18	400W Mercury Vapor Roadway					1	Each	$	$
						4964			

*Pricing shall include all costs related to installation, including in-line fuse (labor and materials).

B2: Unit Pricing: Overhead Streetlights: Pricing for #10 AWG Wiring Installation (where required)

Item No.	Existing Fixture	Item	Unit	Per-Unit Price Adjustment
19	N/A	Flat fee: #10 AWG Wiring Installation (time and materials) where existing street light conductors or circuits are insufficient	Each, as required	$

B OPTION: LED STREETLIGHTS, INSTALLED

TOTAL BASE BID (PROPOSAL #___ of ___):

Enter Total: $ _____

In Words: _____

Authorized Signature: _____

Date: _____

Please complete all sections.

Controls Unit Pricing - Add-Alternate: Pricing for Smart Controls for Overhead Streetlights (Installed)

Propose up to two options for controls to be installed concurrently with items from previous tab

Item No.	Existing Fixture	Item	Proposed Control (Include Manufacturer, Model #)	Qty.	Unit	Unit Price	Extended Price
2a	N/A	Smart Controls: Overhead (option 1)			Each	$	$
2b	N/A	Smart Controls: Overhead (option 2)			Each	$	$

Controls Photocell Option: Unit Pricing - Add-Alternate: Pricing for Photocells

Propose up to two options for controls to be installed concurrently with items from previous tab

Item No.	Existing Fixture	Item	Proposed Control (Include Manufacturer, Model #)	Qty.	Unit	Unit Price	Extended Price
1a	N/A	Photocells (option 1)			Each	$	$
1b	N/A	Photocells (option 2)			Each	$	$

3: Fees and Materials for Additional Scope

Attach a wage rate schedule by position to serve as a basis for adding to the scope of work streetlights not listed above on a time and materials basis. Identify any subcontractors included on the wage rate schedule.

Quotes for materials for additional streetlights to be provided by the Contractor during the contract period upon request and specified by the City. Cost of materials subject to a maximum mark-up of 10%.

Bid Form Signature

(Biddner Name--Please Print

By:

(Signature)

Title:
***** **BID FORM MUST BE SIGNED** *****

Please complete all sections.

Streetlight Maintenance Option A (before LED conversion) Contractor to Provide Labor and Materials	
Pole Quantity	
Per unit pole price (Monthly)	$
Total Monthly Pole Price	$
Total Annual Pole Price	$
Before Conversion - Written	

Streetlight Maintenance Option B (after LED conversion) Contractor to Provide Labor and Materials Not Covered by Warranty	
Pole Quantity	
Per unit pole price (Monthly)	$
Total Monthly Pole Price	$
Total Annual Pole Price	$
After Conversion - Written	

Additional Price Considerations	
Price Escalator if Contract Extended (Optional)	
Year 4	%
Year 5	%
Optional Price Escalator - Written	

Non-Routine and Emergency Services

Standard response time for emergencies will not be more than two hours from the time the call is received. Emergency work is billed based on time and materials as shown in Tables 2.a and 2.b.

2.a Labor/Wages			
Item	**Description**	**Price**	**Units**
E-1	Journeyman Electrician/Lineman		Per Hour
E-1 Price in Words:			
E-2	Journeyman Electrician/Lineman – Overtime		Per Hour
E-2 Price in Words:			
E-3	Apprentice Electrician/Lineman		Per Hour
E-3 Price in Words:			
E-4	Apprentice Electrician/Lineman – Overtime		Per Hour
E-4 Price in Words:			
E-5	Lamp and Photocell Service Person		Per Hour
E-5 Price in Words:			
E-6	Laborer		Per Hour
E-6 Price in Words:			
E-7	Laborer - Overtime		Per Hour
E-7 Price in Words:			

2.b Materials Pricing

Specify materials pricing for items not included in Per Pole pricing above (10% maximum markup). Attach additional bid sheets as needed, using the same format. All materials must meet National Grid Standards.

Item	**Description**	**Price**	**Units**
E-1	Truck (35 to 40 foot bucket truck)		Per Call
E-1 Price in Words:			
E-2	Dump Truck (2 to 3 yard)		Per Call
E-2 Price in Words:			
E-3	Crane (5 to 10 ton)		Per Call
E-3 Price in Words:			
E-4	Pole truck with pole auger		Per Call
E-4 Price in Words:			
E-5	Group relamp (including bulb and photocell cleaning and tree trimming, five or more per request)		Per Fixture
E-5 Price in Words:			
E-6	Cobra lens (dish or flat lens-glass)		Each
E-6 Price in Words:			
E-7	3 foot mast arm w/ hardware w/o fixture		Each
E-7 Price in Words:			

E-8	4 foot mast arm w/ hardware w/o fixture		Each
E-8 Price in Words:			
E-9	6 foot mast arm w/ hardware w/o fixture		Each
E-9 Price in Words:			
E-10	8 foot mast arm w/ hardware w/o fixture		Each
E-10 Price in Words:			
E-11	10 foot mast arm w/ hardware w/o fixture		Each
E-11 Price in Words:			
E-12	12 foot mast arm w/ hardware w/o fixture		Each
E-12 Price in Words:			
E-13	Relocate existing lamp and bracket from old pole to new pole (associated with utility replacements		Each
E-13 Price in Words:			
E-14	Pole – wood		Each
E-14 Price in Words:			
E-15	Pole – fiber (<25 feet)		Each
E-15 Price in Words:			
E-16	Pole – Metal (>25 feet)		Each
E-16 Price in Words:			
E-17	Standard material markup		Percent
E-17 Price in Words:			

Bid Form Signature
(Biddner Name--Please Print By:
(Signature) Title:
***** **BID FORM MUST BE SIGNED** *****

Appendix I

CONTRACT AGREEMENT
FOR:

16-019
STREETLIGHT CONVERSION AND MAINTENANCE

PAWTUCKET, RHODE ISLAND
EAST PROVIDENCE, RHODE ISLAND

PURCHASING DIVISION
137 ROOSEVELT AVE.
PAWTUCKET, RHODE ISLAND

«Date»

CONTRACT AGREEMENT

16-019
STREETLIGHT CONVERSION AND MAINTENANCE

Pawtucket, Rhode Island_____ East Providence, Rhode Island_____

1. AGREEMENT FOR SERVICES

This Agreement for Services (hereinafter the "Agreement" or "Contract") made this «Day» day of «Month», «Year» between the City of Pawtucket, a municipal corporation of the State of Rhode Island, with a business address of 137 Roosevelt Avenue, Pawtucket, Rhode Island (hereinafter the "City") and «Company_Name», company authorized to do business in the State of Rhode Island, with a business address of «Company_Address», «CityState» (hereinafter the "Contractor").

2. SCOPE OF CONTRACTOR SERVICES

This is a contract to provide the City with «Bid_Name» for a three-year period starting __/__/__ and ending on __/__/__, with an option to renew for two (2) additional one (1) year terms, per the specifications included in Bid # «Bid_» and all addendums issued and any resulting negotiations, the bid response received by the City from the Contractor, and in accordance with the City's Purchasing Rules and Regulations and General Terms and Conditions of Purchase, as specified herein and as set forth in the following Exhibits, all of which are attached hereto ands incorporated into this Agreement by reference herein:

Appendix A Anti-Kickback Acknowledgement

Appendix B City of Pawtucket Purchasing Rules and Regulations and Terms and Conditions of Purchase

Appendix C Narragansett Electric Co. (National Grid) Guidelines for Customer-Owned Street Lighting Installation and Maintenance replacement

Appendix D Customer-Owned Streetlight Equipment Standards

Appendix E Specification for LED Luminaires

Appendix F Smart City Platform Requirements

Appendix G City of Pawtucket

G1 Pawtucket Streetlight Inventory

G2 Pawtucket Decorative Lighting Inventory

G3 Pawtucket Price Proposal Form

Appendix H City of East Providence

H1 East Providence Streetlight Inventory

H2 East Providence Price Proposal Form

Appendix I Sample Services Price Agreement

Delivery of goods and services will be provided in accordance with Bid «Bid_».

3. **COMPENSATION FOR SERVICES**

The City shall pay the Contractor in the following sums for work performed under this Agreement after the effective date as set out below:

$«Price»

The payment and performance of any obligations under this contract for years beyond the first fiscal year are subject to the availability of funds. Payment will not be made until services have been fully performed and accepted, and upon a properly submitted invoice. All invoices must clearly display the purchase order number.

4. **RHODE ISLAND LAW AND FORUM**

(a) This Agreement shall be construed according to the law of the State of Rhode Island.

(b) Any litigation between the City and the Contractor arising under this Agreement or out of work performed under this Agreement shall occur, if in the state courts, in the Providence County Superior Court, and in the federal courts, in the United States District Court for the District of Rhode Island.

5. **NOTICE**

Any notice provided for under this Agreement shall be sufficient if in writing and delivered personally to the following addressee or deposited in the United States mail, postage prepaid, certified mail, return receipt requested, addressed as follows, or to such other address as the receiving party hereafter shall specify in writing:

If to the City:

City of Pawtucket
Purchasing Office
137 Roosevelt Ave.
Pawtucket, RI 02860

If to the Contractor:

«Company_Name»
«Company_Address»
«CityState»

6. **COMPLIANCE WITH LAWS**

Contractor shall materially comply with any and all Federal, state and local laws and regulations now in force and which may hereafter during the term of this contract, be enacted and become effected which are applicable, as well as obtaining any and all required permits and licenses.

7. **TIMEFRAME TO COMPLETE**

The Contractor shall complete the «Bid_Name» located in the City of Pawtucket, Rhode Island, no later than __-__-__.

8. **WAIVERS**

No waiver of any breach or any one or more of the conditions or covenants of this Contract by City or

Contractor shall be deemed to imply or to constitute a waiver of any prior or succeeding breach; and the failure of City or Contractor to insist upon the strict performance of the terms, covenants, agreements and conditions herein contained or any one of them shall not constitute or be construed as a waiver or relinquishment of City's or Contractor's right to thereafter enforce any such default, or any term, covenants, agreement or condition.

CONTRACTOR

«Company_Name»
«Company_Address»
«CityState»

_____ _____
WITNESS

Subscribed and sworn to before me in the _____

on this _____ day of _____, 2011.

_____
NOTARY PUBLIC
My Commission Expires:

CITY OF PAWTUCKET

_____ _____
WITNESS

Subscribed and sworn to before me in the _____

on this _____ day of _____, 2011.

_____
NOTARY PUBLIC
My Commission Expires:

CITY OF PAWTUCKET
GENERAL TERMS AND CONDITIONS OF PURCHASE

Preamble

The City of Pawtucket's Purchasing Office may, from time to time, make amendments to the General Terms and Conditions when the City of Pawtucket's Purchasing Agent determines that such amendments are in the best interest of the City of Pawtucket. Amendments shall be made available for public inspection at the Purchasing Office located in Pawtucket City Hall but shall not require formal public notice and hearing. Copies of the Terms and Conditions shall be provided to any individual or firm requesting them.

CITY OF PAWTUCKET'S PURCHASING OFFICE GENERAL CONDITIONS OF PURCHASE

All City of Pawtucket purchase orders, contracts, solicitations, delivery orders and service requests shall incorporate and be subject to the provisions of Rhode Island General Laws 8-15-4 and the City of Pawtucket purchasing rules and regulations adopted pursuant thereto, all other applicable provisions of the Rhode Island General Laws, the Pawtucket City Charter, specific requirements described in the Request or Contract, and the following General Conditions of Purchase:

1. GENERAL

All purchase orders, contracts, solicitations, delivery orders, and service requests are for specified goods and services, in accordance with express terms and conditions of purchase, as defined herein. For the purposes of this document, the terms "bidder" and "contractor" refer to any individual, firm, corporation, or other entity presenting a proposal indicating a desire to enter into contracts with the City of Pawtucket, or with whom a contract is executed by the City of Pawtucket's Purchasing Agent, and the term "contractor" shall have the same meaning as "vendor".

2. ENTIRE AGREEMENT

The City of Pawtucket's Purchase Order, or other City of Pawtucket contract endorsed by the City of Pawtucket Purchasing Office, shall constitute the entire and exclusive agreement between the City of Pawtucket and any contractor receiving an award. In the event any conflict between the bidder's standard terms of sale, these conditions or more specific provisions contained in the solicitation shall govern.

All communication between the City of Pawtucket and any contractor pertaining to any award or contract shall be accomplished in writing.

a. Each proposal will be received with the understanding that the acceptance, in writing, by contract or Purchase Order by the City of Pawtucket Purchasing Agent of the offer to do work or to furnish any or all the materials, equipment, supplies or services described therein shall constitute a contract between the bidder and the City of Pawtucket. This shall bind the bidder on his part to furnish and deliver at the prices and in accordance with the conditions of said accepted proposal and detailed specifications and the City of Pawtucket on its part to order from such contractor (except in case of emergency) and to pay for at the agreed prices, all materials, equipment, supplies or services specified and delivered. A contract shall be deemed executory only to the extent of funds available for payment of the amounts shown on Purchase Orders issued by the City of Pawtucket to the contractors.

b. No alterations or variations of the terms of the contract shall be valid or binding upon the City of Pawtucket unless submitted in writing and accepted by the City of Pawtucket Purchasing Agent. All orders and changes thereof must emanate from the City of Pawtucket Purchasing Office: no oral agreement or arrangement made by a contractor with a department or employee will be considered to be binding on the City of Pawtucket Purchasing Agent, and may be disregarded.

c. Contracts will remain in force for the contract period specified or until all articles or services ordered before date of termination shall have been satisfactorily delivered or rendered and accepted and thereafter until all terms and conditions have been met, unless:

1. terminated prior to expiration date by satisfactory delivery against orders of entire quantities, or
2. extended upon written authorization of the City of Pawtucket Purchasing Agent and accepted by the contractor, to permit ordering of the unordered balances or additional quantities at the contract price and in accordance with the contract terms, or
3. canceled by the City of Pawtucket in accordance with other provisions stated herein.

d. It is mutually understood and agreed that the contractor shall not assign, transfer, convey, sublet or otherwise dispose of this contract or his right, title or interest therein, or his power to execute such contract, to any other person, company or corporation, without the previous consent, in writing, of the City of Pawtucket Purchasing Agent.

e. If, subsequent to the submission of an offer or issuance of a purchase order or execution of a contract, the bidder or contractor shall merge with or be acquired by another entity, the contract may be terminated, except as a corporate resolution prepared by the contractor and the new entity ratifying acceptance of the original bid or contract terms, condition, and pricing is submitted to the City of Pawtucket Purchasing Office, and expressly accepted.

f. The contractor or bidder further warrants by submission of an offer or acceptance of a purchase order or other contract that he has no knowledge at the time of such action of any outstanding and delinquent or otherwise unsettled debt owed by him to the City of Pawtucket, and agrees that later discovery by the City of Pawtucket Purchasing Agent that this warranty

was given in spite of such knowledge, except where the matter is pending in hearing or from any appeal therefrom, shall form reasonable grounds for termination of the contract.

3. SUBCONTRACTS

No subcontracts or collateral agreements shall be permitted, except with the City of Pawtucket's express written consent. Upon request, contractors must submit to the City of Pawtucket Purchasing Office a list of all subcontractors to be employed in the performance of any Purchase Order or other contract arising from this Request.

4. RELATIONSHIP OF PARTIES

The contractor or bidder warrants, by submission of an offer or acceptance of a purchase order or other contract, that he is not an employee, agent, or servant of the City of Pawtucket, and that he is fully qualified and capable in all material regards to provide the specified goods and services. Nothing herein shall be construed as creating any contractual relationship or obligation between the City of Pawtucket and any sub-bidder, subcontractor, supplier, or employee of the contractor or offeror.

5. COSTS OF PREPARATION

All costs associated with the preparation, development, or submission of bids or other offers will be borne by the offeror. The City of Pawtucket will not reimburse any offeror for such costs.

6. SPECIFIED QUANTITY REQUIREMENT

Except where expressly specified to the contrary, all solicitations and contracts are predicated on a specified quantity of goods or services, or for a specified level of funding.

a. The City of Pawtucket reserves the right to modify the quantity, scope of service, date of delivery or completion, or funding of any contract, with no penalty or charge, by written notice to the contractor, except where alternate terms have been expressly made a part of the contract.
b. The City of Pawtucket shall not accept quantities in excess of the specified quantity except where the item is normally sold by weight (where sold by weight, the City of Pawtucket will not accept quantities greater than ten per cent [10%] of the specified quantity), or where the Request or Contract provides for awards for other than exact quantities.
c. Purchase Orders or other contracts may be increased in quantity or extended in term without subsequent solicit with the mutual consent of the contractor and the City of Pawtucket, where determined by the City of Pawtucket Purchasing Agent to be in the City of Pawtucket's best interest.

7. TERM AND RENEWAL

Where offers have been requested or contracts awarded for terms exceeding periods of twelve (12) months, it is mutually understood and agreed that the City of Pawtucket's commitment is limited to a base term not to exceed twelve (12) months, subject to renewal annually at the City of Pawtucket's sole option for successive terms as otherwise described, except where expressly specified to the contrary. Purchase orders appearing to commit to obligations of funding or terms of performance may be executed for administrative convenience, but are otherwise subject to this provision, and in such cases the City of Pawtucket's renewal shall be deemed to be automatic, conditional on the continued availability of appropriated funds for the purpose, except as written notice of the City of Pawtucket's intent not to renew is served.

8. DELIVERY/COMPLETION

Delivery must be made as ordered and/or projects completed in accordance with the proposal. If delivery qualifications do not appear on the bidder's proposal, it will be interpreted to mean that goods are in stock and that shipment will be made within seven (7) calendar days. If the project completion date is not specified in the proposal, the date shall be determined by the City of Pawtucket Purchasing Agent. The decision of the City of Pawtucket Purchasing Agent, as to reasonable compliance with the delivery terms, and date of completion shall be final. Burden of proof of delay in receipt of order shall rest with the contractor. No delivery charges shall be added to invoices except when authorized on the Purchase Order.

9. FOREIGN CORPORATIONS

In accordance with Title 7 Chapter 1.1 (“Business Corporations”) of the General Laws of Rhode Island, no foreign corporation shall have the right to transact business in this state until it shall have procured a certificate of authority so to do from the Secretary of State.

10. PRICING

All pricing offered or extended to the City of Pawtucket is considered to be firm and fixed unless expressly provided for to the contrary. All prices shall be quoted F.O.B. Destination with freight costs included in the unit cost to be paid by the City of Pawtucket, except, where the Request or Contract permits, offers reflecting F.O.B. Shipping Point will be considered, and freight costs may then be prepaid and added to the invoice.

11. COLLUSION

Bidder or contractor warrants that he has not, directly or indirectly, entered into any agree participated in any collusion or otherwise taken any action in restraint of full competitive bidding. In special circumstances, an executed affidavit will be required as a part of the bid.

12. PROHIBITION AGAINST CONTINGENT FEES AND GRATUITIES

Bidder or contractor warrants that he has not paid, and agrees not to pay, any bonus, commission, fee, or gratuity to any employee or official of the City of Pawtucket for the purpose of obtaining any contract or award issued by the City of Pawtucket. Bidder or contractor further warrants that no commission or other payment has been or will be received from or paid to any third party contingent on the award of any contract by the City of Pawtucket, except as shall have been expressly communicated to the City of Pawtucket Purchasing Agent in writing prior to acceptance of the contract or award in question. Subsequent discovery by the City of Pawtucket of non-compliance with these provisions shall constitute sufficient cause for immediate termination of all outstanding contracts and suspension or debarment of the bidder(s) or contractor(s) involved.

13. AWARDS

Awards will be made with reasonable promptness and by written notice to the successful bidder (only); bids are considered to be irrevocable for a period of ninety (90) days following the bid opening unless expressly provided for to the contrary in the Request, and may not be withdrawn during this period without the express permission of the City of Pawtucket Purchasing Agent.

a. Awards shall be made to the bidder(s) whose offer(s) constitutes the lowest responsive price offer (or lowest responsive price offer on an evaluated basis) for the item(s) in question or for the Request as a whole, at the option of the City of Pawtucket. The City of Pawtucket reserves the right to determine those offers which are responsive to the Request, or which otherwise serve its best interests.

b. The City of Pawtucket reserves the right, before making award, to initiate investigations as to whether or not the materials, equipment, supplies, qualifications or facilities offered by the bidder meet the requirements set forth in the proposal and specification, and are ample and sufficient to insure the proper performance of the contract in the event of award. If upon such examination it is found that the conditions of the proposal are not complied with or that articles or equipment proposed to be furnished do not meet the requirements called for, or that the qualifications or facilities are not satisfactory, the City of Pawtucket may reject such a bid. It is distinctly understood, however, that nothing in the foregoing shall mean or imply that it is obligatory upon the City of Pawtucket to make any examinations before awarding a contract; and it is further understood that if such examination is made, it in no way relieves the contractor from fulfilling all requirements and conditions of the contract.

c. Qualified or conditional offers which impose limitations of the bidder's liability or modify the requirements of the bid, offers for alternate specifications, or which are made subject to different terms and conditions than those specified by the City of Pawtucket may, at the option of the City of Pawtucket, be
   1. rejected as being non-responsive, or
   2. set aside in favor of the City of Pawtucket's terms and conditions (with the consent of the bidder), or
   3. accepted, where the City of Pawtucket Purchasing Agent determines that such acceptance best serves the interests of the City of Pawtucket.

Acceptance or rejection of alternate or counter-offers by the City of Pawtucket shall not constitute a precedent which shall be considered to be binding on successive solicitations or procurements.

d. Bids submitted in pencil, or which do not bear an original signature, in ink, by an owner or authorized agent thereof, will not be accepted.

e. Bids must be extended in the unit of measure specified in the Request. In the event of any discrepancy between unit prices and their extensions, the unit price will govern.

f. The City of Pawtucket Purchasing Agent reserves the right to determine the responsibility of any bidder for a particular procurement.

g. The City of Pawtucket Purchasing Agent reserves the right to reject any and all bids in whole or in part, to waive technical defects, irregularities, and omissions, and to give consideration to past performance of the offerors where, in his judgment the best interests of the City of Pawtucket will be served by so doing.

h. The City of Pawtucket Purchasing Agent reserves the right to make awards by items, group of items or on the total low bid for all the items specified as indicated in the detailed specification, unless the bidder specifically indicates otherwise in his bid.

i. Preference may be given to bids on products raised or manufactured in the City of Pawtucket or State of Rhode Island, other things being equal.

j. The impact of discounted payment terms shall not be considered in evaluating responses to any Request.

k. The City of Pawtucket Purchasing Agent reserves the right to act in the City of Pawtucket's best interests regarding awards caused by clerical errors by the City of Pawtucket Purchasing Office.

14. SUSPENSION AND DEBARMENT

The City of Pawtucket Purchasing Agent may suspend or debar any vendor or potential bidder, for good cause shown:

a. A debarment or suspension against a part of a corporate entity constitutes debarment or suspension of all of its divisions and all other organizational elements, except where the action has been specifically limited in scope and application, and may include all known corporate affiliates of a contractor, when such offense or act occurred in connection with the affiliate's performance of duties for or on behalf of the contractor, or with the

knowledge, approval, or acquiescence of the contractor or one or more of its principals or directors (or where the contractor otherwise participated in, knew of, or had reason to know of the acts).

b. The fraudulent, criminal or other serious improper conduct of any officer, director, shareholder, partner, employee, or any other individual associated with a contractor may be imputed to the contractor when the conduct occurred in connection with the individual's performance of duties for or on behalf of the contractor, or with the contractor's knowledge, approval or acquiescence. The contractor's acceptance of benefits derived from the conduct shall be evidence of such knowledge, approval, or acquiescence.

c. A vendor or contractor who knowingly engages as a subcontractor for a contract awarded by the City of Pawtucket to a vendor or contractor then under a ruling of suspension or debarment by the City of Pawtucket shall be subject to disallowance of cost, annulment or termination of award, issuance of a stop work order, or debarment or suspension, as may be judged to be appropriate by the City of Pawtucket's Purchasing Agent.

15. PUBLIC RECORDS

Contractors and bidders are advised that certain documents, correspondence, and other submissions to the City of Pawtucket's Purchasing Office may be voluntarily made public by the City of Pawtucket absent specific notice that portions of such submittals may contain confidential or proprietary information, such that public access to those items should be withheld.

16. PRODUCT EVALUATION

In all specifications, the words "or equal" are understood after each article when manufacturer's name or catalog are referenced. If bidding on items other than those specified, the bidder must, in every instance, give the trade designation of the article, manufacturer's name and detailed specifications of the item the bidder proposes to furnish; otherwise, the bid will be construed as submitted on the identical commodity described in the detailed specifications. The City of Pawtucket's Purchasing Agent reserves the right to determine whether or not the item submitted is the approved equal the detailed specifications.

a. Any objections to specifications must be filed by a bidder, in writing, with the City of Pawtucket's Purchasing Agent at least 96 hours before the time of bid opening to enable the City of Pawtucket's Purchasing Office to properly investigate the objections.

b. All standards are minimum standards except as otherwise provided for in the Request or Contract.

c. Samples must be submitted to the City of Pawtucket's Purchasing Office in accordance with the terms of the proposals and detailed specifications. Samples must be furnished free of charge and must be accompanied by descriptive memorandum invoices indicating whether or not the bidder desires their return and specifying the address to which they are to be returned (at the bidder's risk and expense), provided they have not been used or made useless by tests; and absent instructions, the samples shall be considered to be abandoned. Award samples may be held for comparison with deliveries.

d. All samples submitted are subject to test by any laboratory the City of Pawtucket's Purchasing Agent may designate.

17. PRODUCT ACCEPTANCE

All merchandise offered or otherwise provided shall be new, of prime manufacture, and of first quality unless otherwise specified by the City of Pawtucket. The City of Pawtucket reserves the right to reject all nonconforming goods, and to cause their return for credit or replacement, at the City of Pawtucket's option. Contract deliverables specified for procurements of services shall be construed to be work products, and subject to the provisions of this section.

a. Failure by the City of Pawtucket to discover latent defect(s) or concealed damage or non-conformance shall not foreclose the City of Pawtucket's right to subsequently reject the goods in question.

b. Formal or informal acceptance by the City of Pawtucket of non-conforming goods shall not constitute a precedent for successive receipts or procurements.

c. Where the contractor fails to promptly cure the defect or replace the goods, the City of Pawtucket reserves the right to cancel the Purchase Order, contract with a different contractor, and to invoice the original contractor for any differential in price over the original contract price.

d. When materials, equipment or supplies are rejected, the same must be removed by the contractor from the premises of the City of Pawtucket within forty-eight (48) hours of notification. Rejected items left longer than two days will be regarded as abandoned and the City of Pawtucket shall have the right to dispose of them as its own property.

18. PRODUCT WARRANTIES

All product or service warranties normally offered by the contractor or bidder shall accrue to the City of Pawtucket's benefit, in addition to any special requirements which may be imposed by the City of Pawtucket. Every unit delivered must be guaranteed against faulty material and workmanship for a period of one year unless otherwise specified, and the City of Pawtucket may, in the event of failure, order its replacement, repair, or return for full credit, at its sole option.

19. PAYMENT

Unless otherwise provided for by the Request or Contract, payment shall not be made until delivery has been made, or services performed, in full, and accepted. Payment shall not be due prior to thirty (30) working days following the latest of completion, acceptance, or the rendering of a properly submitted invoice.

a. Payment terms other than the foregoing may be rejected as being nonresponsive.

b. No partial shipments, or partial completion will be accepted, unless provided for by the Request or Contract.
c. Where a question of quality is involved, or failure to complete a project by the specified due date, payment in whole or part against which to charge back any adjustment required, shall be withheld at the direction of the City of Pawtucket Purchasing Agent. In the event a cash discount is stipulated, the withholding of payments, as herein described, will not deprive the City of Pawtucket from taking such discount.
d. Payments for used portion of inferior delivery or late delivery will be made by the City of Pawtucket on an adjusted price basis.
e. Payments on contracts under architectural or engineering supervision must be accompanied by a Certificate of Payment and Statement of Account signed by the architect or engineer and submitted to the City of Pawtucket Purchasing Office for approval.

20. THIRD PARTY PAYMENTS

The City of Pawtucket recognizes no assigned or collateral rights to any purchase agreement except as may be expressly provided for in the bid or contract documents, and will not accede to any request for third party or joint payment(s), except as provided for in specific orders by a court of competent jurisdiction, or by express written permission of the City of Pawtucket's Purchasing Agent. Where an offer is contingent upon such payment(s), the offeror is obligated to serve affirmative notice in his bid submission.

21. SET-OFF AGAINST PAYMENTS

Payments due the contractor may be subject to reduction equal to the amount of unpaid and delinquent state taxes (or other just debt owed to the State), except where notice of delinquency has not been served or while the matter is pending in hearing or from any appeal therefrom.

22. CLAIMS

Any claim against a contractor may be deducted by the City of Pawtucket from any money due him in the same or other transactions. If no deduction is made in such fashion, the contractor shall pay the City of Pawtucket the amount of such claim on demand. Submission of a voucher and payment, thereof, by the City of Pawtucket shall not preclude the City of Pawtucket's Purchasing Agent from demanding a price adjustment in any case when the commodity delivered is later found to deviate from the specifications and proposal.

a. The City of Pawtucket's Purchasing Agent may assess dollar damages against a vendor or contractor determined to be non-performing or otherwise in default of their contractual obligations equal to the cost of remedy incurred by the City of Pawtucket, and make payment of such damages a condition for consideration for any subsequent award. Failure by the vendor or contractor to pay such damages shall constitute just cause for disqualification and rejection, suspension, or debarment.

23. CERTIFICATION OF FUNDING

The Director of Finance shall provide certification as to the availability of funds to support the procurement for the current fiscal year ending June 30th only. Where delivery or service requirements extend beyond the end of the current fiscal year, such extensions are subject to both the availability of appropriated funds and a determination of continued need.

24. UNUSED BALANCES

Unless otherwise specified, all unused Blanket Order quantities and/or unexpended funds shall be automatically canceled on the expiration of the specified term. Similarly, for orders encompassing more than one fiscal year, unexpended balances of funding allotted for an individual fiscal year may be liquidated at the close of that fiscal year, at the City of Pawtucket's sole option.

25. MINORITY BUSINESS ENTERPRISES

Pursuant to the provisions of Title 37 Chapter 14.1of the General Laws, the City of Pawtucket reserves the right to apply additional consideration to offers, and to direct awards to bidders other than the responsive bid representing the lowest price where:

a. the offer is fully responsive to the terms and conditions of the Request, and
b. the price offer is determined to be within a competitive range (not to exceed 5% higher than the lowest responsive price offer) for the product or service, and
c. the firm making the offer has been certified by the R.I. Department of Economic Development to be a small business concern meeting the criteria established to be considered a Minority Business Enterprise.

26. PREVAILING WAGE REQUIREMENT

In accordance with Title 37 Chapter 13 of the General Laws of Rhode Island, payment of the general prevailing rate of per diem wages and the general prevailing rate for regular, overtime and other working conditions existing in the locality for each craft, mechanic, teamster, or type of workman needed to execute this work is a requirement for both contractors and subcontractors for all public works.

27. EQUAL OPPORTUNITY COMPLIANCE, HANDICAPPED ACCESS AND AFFIRMATIVE ACTION

Contractors of the City of Pawtucket are required to demonstrate the same commitment to equal opportunity as prevails under federal contracts controlled by Federal Executive Orders 11246, 11625, 11375 and 11830, and Title 28 Chapter 5.1 of the General Laws of Rhode Island.
Affirmative action plans shall be submitted by the contractor for review by the State Equal Opportunity Office. A contractor's failure to abide by the rules, regulations, contract terms and compliance reporting provisions as established shall be grounds for forfeiture and penalties as shall be established, including but not limited to suspension.

28. DRUG-FREE WORKPLACE REQUIREMENT

Contractors who do business with the City of Pawtucket and their employees shall abide by the State's drug-free workplace policy and the contractor shall so attest by signing a certificate of compliance.

29. TAXES

The City of Pawtucket is exempt from payment of excise, transportation and sales tax imposed by the Federal or State Government. These taxes should not be included in the proposal price. Exemption Certificates will be furnished upon request.

30. INSURANCE

All construction contractors, independent tradesmen, or firms providing any type of maintenance, repair, or other type of service to be performed on City of Pawtucket premises, buildings, or grounds are required to purchase and maintain coverage with a company or companies licensed to do business in the state as follows:

a. Comprehensive General Liability Insurance
   1) Bodily Injury $500,000 each occurrence/ $1,000,000 annual aggregate
   2) Property Damage $500,000 each occurrence /$500,000 annual aggregate
      Independent Contractors
      Contractual - including construction hold harmless and other types of contracts or agreements in effect for insured operations
      Completed Operations
      Personal Injury (with employee exclusion deleted)
b. Automobile Liability Insurance
   Combined Single Limit not less than $150,000 each occurrence
   Bodily Injury
   Property Damage, and in addition non-owned and/or hired vehicles and equipment
c. Workers' Compensation Insurance
   As required by the General Laws of Rhode Island.

The City of Pawtucket's Purchasing Agent reserves the right to consider and accept alternate forms and plans of insurance or to require additional or more extensive coverage for any individual requirement. Successful bidders shall provide certificates of coverage, reflecting the City of Pawtucket as an additional insured, to the City of Pawtucket Purchasing Office, forty-eight (48) hours prior to the commencement of work, as a condition of award. Failure to comply with this provision shall result in rejection of the offeror's bid.

31. BID SURETY

When requested, a bidder must furnish a Bid Bond or Certified Check for 5% of his bid, or for the stated amount shown in the solicitation. Bid Bonds must be executed by a reliable Surety Company authorized to do business in the State of Rhode Island. Failure to provide Bid Surety with bid may be cause for rejection of bid. The Bid Surety of any three bidders in contention will be held until an award has been made according to the specifications of each proposal. All others will be returned by mail within 48 hours following the bid opening. Upon award of a contract, the remaining sureties will be returned by mail unless instructed to do otherwise.

32. PERFORMANCE AND LABOR AND PAYMENT BONDS

A performance bond and labor and payment bond of up to 100% of an award may be required by the City of Pawtucket's Purchasing Agent. Bonds must meet the following requirements:

a. Corporation: The Bond must be signed by an official of the corporation above his/her official title and the corporate seal must be affixed over his/her signature.
b. Firm or Partnership: The Bond must be signed by all of the partners and must indicate that they are " Doing Business As (name of firm)."
c. Individual: The Bond must be signed by the individual owning the business and indicate "Owner."
d. The Surety Company executing the Bond must be licensed to do business in the State of Rhode Island or Bond must be countersigned by a company so licensed.
e. The Bond must be signed by an official of the Surety Company and the corporate seal must be affixed over his signature.
f. Signatures of two witnesses for both the principal and the Surety must appear on the Bond.
g. A Power of Attorney for the official signing of the Bond for the Surety Company must be submitted with the Bond.

33. SUSPENSION, DEFAULT AND TERMINATION

a. Suspension of a Contract by the City of Pawtucket

The City of Pawtucket reserves the right at any time and for any reason to suspend all or part of this contract, for a reasonable period, not to exceed sixty days, unless the parties agree to a longer period. The City of Pawtucket shall provide the contractor with written notice of the suspension order signed by the Purchasing Agent or his or her designee, which shall set forth the date upon which the suspension shall take effect, the date of its expiration, and all applicable instructions. Upon receipt of said order, the contractor shall immediately comply with the order and suspend all work under this contract as specified in the order. The contractor shall take all reasonable steps to mitigate costs and adverse impact to the work specified in the contract during the suspension period. Before the order expires, the City of Pawtucket shall either:

1. cancel the suspension order;
2. extend the suspension order for a specified time period not to exceed thirty (30) days; or
3. terminate the contract as provided herein.

The contractor shall resume performance once a suspension order issued under this section is canceled or expires. If as a result of the suspension of performance, there is a financial or schedule impact upon the contract, an appropriate adjustment may be made by, or with the approval of, the City of Pawtucket's Purchasing Agent. Any adjustment shall be set forth in writing. After a suspension order has been canceled or expires, the contractor shall provide any request for adjustment to the City of Pawtucket's Purchasing Agent within thirty (30) days after resuming work performance.

b. Termination of a Contract by the City of Pawtucket

1. Termination for Default or Nonperformance

If, for any reason, the contractor breaches the contract by failing to satisfactorily fulfill or perform any obligations, promises, terms, or conditions, and having been given reasonable notice of and opportunity to cure such default, fails to take satisfactory corrective action within the time specified by the City of Pawtucket, the City of Pawtucket may terminate the contract, in whole or in part, the termination of all outstanding contracts or sub-contracts held by the contractor, and the suspension or debarment of the contractor from future procurements by giving written notice to the contractor specifying the date for termination. The City of Pawtucket shall endeavor to provide such notice at least seven (7) calendar days before the effective date of the termination.

A contractor who fails to commence within the time specified or complete an award made for repairs, alterations, construction, or any other service will be considered in default of contract. If contractor consistently fails to deliver quantities or otherwise perform as specified, the City of Pawtucket's Purchasing Agent reserves the right to terminate the contract and contract for completion of the work with another contractor and seek recourse from the defaulting contractor or his surety. In the event of a termination for default or nonperformance, in whole or in part, the City of Pawtucket may procure similar goods or services in a manner and upon terms it deems appropriate, and the contractor shall be liable for the excess costs incurred by the City of Pawtucket as a result of the contractor's default. The contractor, or its surety, agrees to promptly reimburse the City of Pawtucket for the excess costs, but shall have no claim to the difference should the replacement cost be less.

2. Termination Without Cause

The City of Pawtucket may terminate the contract in whole or in part without cause at any time by giving written notice to the contractor of such termination at least thirty (30) days before the effective date of such termination. The notice shall specify the part(s) of the contract being terminated and the effective termination date.

Within thirty (30) days of the effective date of the termination of the contract the contractor shall compile and submit to the City of Pawtucket an accounting of the work performed up to the date of termination. The City of Pawtucket may consider the following claims in determining reasonable compensation owed to the contractor for work performed up to the date of termination:

a. contract prices for goods or services accepted under the contract;
b. costs incurred in preparing to perform and performing the terminated portion of the contract; or
c. any other reasonable costs incurred by the contractor as a result of the termination.

The total sum to be paid to the contractor shall not exceed the total contract price, less any payments previously made to the contractor, the proceeds from any sales of goods or manufacturing materials, and the contract price for work not terminated.

3. Contractor's Obligations in the Event of Termination

If the contract is terminated for any reason, or expires pursuant to its terms, the contractor shall transfer and deliver to the City of Pawtucket in the manner and to the extent directed by the City of Pawtucket:

a. all finished or unfinished material prepared by the contractor; and

b. all material, if any, provided to the contractor by the City of Pawtucket.

For the purposes of the contract, “material” shall include, but is not limited to, goods, supplies, parts, tools, machinery, equipment, furniture, fixtures, information, data, reports, summaries, tables, maps, charts, photographs, studies, recommendations, files, audiotapes, videotapes, records, keys, security badges, and documents.

If the contract is terminated for cause, the contractor shall not be relieved of liability to the City of Pawtucket for damages sustained because of any breach by the contractor. In such event, the City of Pawtucket may retain any amounts which may be due and owing to the contractor until such time as the exact amount of damages due the City of Pawtucket from the contractor has been determined by the City of Pawtucket Purchasing Agent. The City of Pawtucket may also set off any damages so determined against the amounts retained.

Upon termination of the contract, the contractor shall stop performance on the date specified, terminate any outstanding orders and subcontracts applicable to the terminated portion of the contract, and shall incur no further commitments or obligations in connection with the terminated performance. The contractor shall settle all liabilities and claims arising out of the termination of subcontracts and order generating from the terminated performance. The City of Pawtucket may direct the contractor to assign the contractor’s right, title and interest under terminated orders or subcontracts to the City of Pawtucket or a third party.

Terminations of Purchase Order Contracts or Master Pricing Agreements shall require the signature of the City of Pawtucket Purchasing Agent or his designee. Notice of termination by either party shall be submitted in writing to the other party in accordance with the termination clause of the contract, or where no specific termination clause is included, written notice shall be provided no later than thirty (30) days before the expiration of the contract.

34. INDEMNITY

The contractor guarantees:

a. To save the City of Pawtucket, its agents and employees, harmless from any liability imposed upon the City of Pawtucket arising from the negligence, either active or passive, of the contractor, as well as for the use of any copyrighted or uncopyrighted composition, secret process, patented or unpatented invention, article or appliance furnished or used in the performance of the contract of which the contractor is not the patentee, assignee or licensee.

b. To pay for all permits, licenses and fees and give all notices and comply with all laws, ordinances, rules and regulations of the City of Pawtucket and of the State of Rhode Island.

c. That the equipment offered is standard new equipment, latest model of regular stock product with all parts regularly used with the type of equipment offered; also, that no attachment or part has been substituted or applied contrary to manufacturer's recommendations and standard practice.

35. CONTRACTOR'S OBLIGATIONS

In addition to the specific requirements of the contract, construction and building repair contractors bear the following standard responsibilities:

a. To furnish adequate protection from damage for all work and to repair damages of any kind, for which he or his workmen are responsible, to the building or equipment, to his own work, or to the work of other contractors;

b. The contractor, its subcontractor(s) and their employees and/or agents, shall protect and preserve property in the contractor or subcontractor’s possessions in which the City of Pawtucket has an interest, and any and all materials provided to the contractor or subcontractor by the City of Pawtucket;

c. To clear and remove all debris and rubbish resulting from his work from time to time, as directed or required, a completion of the work leave the premises in a neat unobstructed condition, broom clean, and in satisfactory order and repair;

d. To store equipment, supplies, and material at the site only upon approval by the City of Pawtucket, and at his own risk;

e. To perform all work so as to cause the least inconvenience to the City of Pawtucket, and with proper consideration for the rights of other contractors and workmen;

f. To acquaint themselves with conditions to be found at the site, and to assume responsibility for the appropriate dispatching of equipment and supervision of his employees during the conduct of the work;

g. To ensure that his employees are instructed with respect to special regulations, policies, and procedures in effect for any City of Pawtucket facility or site, and that they comply with such rules, including but not limited to security policies or practices and/or criminal background checks for any employees and/or subcontractors;

h. The contractor shall ensure that its employees or agents are experienced and fully qualified to engage in the activities and services required under the contract;

i. The contractor shall ensure that at all times while services are being performed under this contract at least one of its employees or agents on the premises has a good command of the English language and can effectively communicate with the City of Pawtucket and its staff;

j. The contractor and contractor's employees or agents shall comply with all applicable licensing and operating requirements required by federal or state law and shall meet accreditation and other generally accepted standards of quality in the applicable field of activity;

k. The contractor shall secure and retain all employee-related insurance coverage for its employees and agents as required by law; and

l. The contractor, subcontractor, and his or her employees and agents shall not disclose any confidential information of the City of Pawtucket to a third party. Confidential information means:

(1) any information of a sensitive or proprietary nature, whether or not specially identified as confidential or proprietary; or

(2) any information about the City of Pawtucket gained during the performance of a contract that is not already lawfully in the public domain.

36. FORCE MAJEURE

All orders shall be filled by the contractor with reasonable promptness, but the contractor shall not be held responsible for any losses resulting if the fulfillment of the terms of the contract shall be delayed or prevented by wars, acts of public enemies, strikes, fires, floods, acts of God, or for any other acts not within the control of the contractor and which by the exercise of reasonable diligence, the contractor is unable to prevent.