CITY OF PAWTUCKET

REQUEST FOR PROPOSALS

Bid #16-007C
Citywide Sidewalk Construction

February 26, 2016

Contents:

1.0 Bid/Solicitation Information

2.0 Instructions and Notifications to Bidders

3.0 Overview

4.0 Scope of Work

5.0 Insurance

6.0 Acknowledgement of Risk and Hold Harmless Agreement

7.0 Additional Insurance Requirements

8.0 Proposal Content and Organization

9.0 Evaluation Criteria

10.0 Miscellaneous

11.0 Bid Form

12.0 General Conditions – AIA Document A201

12.1 Addendum To General Conditions

13.0 Supplementary Conditions

Appendix A Anti-Kickback Acknowledgement

Appendix B City of Pawtucket Purchasing Rules and Regulations and Terms and Conditions of Purchase

Appendix C General Wage Rate Decision – Davis Bacon

Appendix D Pawtucket 50-50 Sidewalk Program Application Form

Appendix E Construction Details

Appendix F Brick Industry Association Technical Notes 14 and 14A

1.0 - Bid/Solicitation Information

Schedule

Pre-Bid/Proposal Conference: ☐ No ✕ Yes

Mandatory
March 10, 2016 @ 3:00 PM
Public Works Center
250 Armistice Boulevard, Pawtucket, RI

Requests for Further Information:
March 17, 2016 @ 4:00 PM

Requests for information or clarification must be made electronically to the attention of:
Andrew Silvia, Chief of Project Development
E-mail: asilvia@pawtucketri.com

Please reference the RFP / LOI number on all correspondence. Answers to questions received, if any, will be posted on the internet as an addendum to this bid solicitation.

RFP Submission Deadline:
March 24, 2016 at 10:00 AM
Late submittals will not be considered.

Proposals must be mailed or hand-delivered in a sealed envelope **marked with the RFP/Bid # and Project Name** to:

Pawtucket City Hall - Purchasing Office
137 Roosevelt Avenue
Pawtucket, RI 02860

Bonds/Surety Required

Bid Bond: ☐No ✕ Yes
Bidder is required to provide a bid surety in the form of a bid bond or certified check payable to the City of Pawtucket in an amount not less than five percent (5%) of the bid price.

Fidelity Bond: ✕No ☐ Yes

Performance and Payment Bond: ☐ No ✕ Yes
(Submit upon award of contract)

Bidder is required to provide a performance and payment bond as outlined in the City's General Terms & Conditions of Purchase (Appendix B of this RFP) in an amount not less than one hundred percent (50%) of the bid price.

Miscellaneous

The bid process and resulting contract are subject to the Rules and Regulations and General Terms and Conditions of Purchase. Submission of a bid in response to this solicitation is acknowledgement and acceptance of these Rules and Regulations and General Terms and Conditions of Purchase.

The City of Pawtucket reserves the right to award on the basis of cost alone, accept or reject any or all bids, and to act in its best interest including, but not limited to, directly negotiating with any vendor who submits a proposal in response to this RFP and to award a contract based upon the results of those negotiations alone. Proposals found to be technically or substantially non-responsive at any point in the evaluation process

will be rejected and not considered further. The City of Pawtucket may, at its sole option, elect to require presentations(s) by bidders clearly in consideration for award.

2.0 - Instructions and Notifications to Bidders

- It is the vendor's responsibility to examine all specifications and site conditions thoroughly, and comply fully with specifications and all attached terms and conditions. Vendors must comply with all Federal, State, and City laws, ordinances and regulations, and meet any and all registration requirements where required for contractors as set forth by the State of Rhode Island. Failure to make a complete submission as described herein may result in a rejection of the proposal.
- All costs associated with developing or submitting a proposal in response to this Request, or to provide oral or written clarification of its content shall be borne by the bidder. The City of Pawtucket assumes no responsibility for these costs.
- A submittal may be withdrawn by written request to the Purchasing Agent by the proposer prior to the stated RFP deadline.
- Prior to the proposal deadline established for this RFP, changes may be made to a proposal already received by the City if that vendor makes a request to the Purchasing Agent, in writing, to do so. No changes to a proposal shall be made after the RFP deadline.
- Proposals are considered to be irrevocable for a period of not less than ninety (90) days following the opening date, and may not be withdrawn, except with the express written permission of the Purchasing Agent. Should any vendor object to this condition, the vendor must provide objection through a question and/or complaint to the Purchasing Agent prior to the proposal deadline.
- All pricing submitted will be considered to be firm and fixed unless otherwise indicated herein.
- The vendor has full responsibility to ensure that the proposal arrives at the Purchasing Division Office prior to the deadline set out herein. The City assumes no responsibility for delays caused by the U.S. Postal Service or any other delivery service. Postmarking by the due date will not substitute for actual receipt of response by the due date. Proposals arriving after the deadline may be returned, unopened, to the vendor, or may simply be declared non-responsive and not subject to evaluation, at the sole discretion of the Purchasing Agent. **For the purposes of this requirement, the official time and date shall be that of the time clock in the City of Pawtucket's Purchasing Office.**
- At the time and place fixed for the opening of Bids, the Owner will cause to be opened and publicly read aloud every Bid received within the time set for receiving Bids, irrespective of any irregularities therein. Bidders and other persons properly interested may be present, in person or by representative.
- It is intended that an award pursuant to this Request will be made to a prime contractor, who will assume responsibility for all aspects of the work. Joint venture and cooperative proposals will not be considered, but subcontracts are permitted, provided that their use is clearly indicated in the bidder's proposal, and the subcontractor(s) proposed to be used are identified in the proposal.
- Bidders are advised that all materials submitted to the City of Pawtucket for consideration in response to this Request for Proposals shall be considered to be public records as defined in Title 38 Chapter 2 of the Rhode Island General

Laws, without exception, and may be released for inspection immediately upon request once an award has been made.

- Vendors are responsible for errors and omissions in their proposals. No such error or omission shall diminish the vendor's obligations to the City.
- The City reserves the right to reject any or all proposals, or portions thereof, at any time, with no penalty. The City also has the right to waive immaterial defects and minor irregularities in any submitted proposal at its sole discretion. All material submitted in response to this RFP shall become the property of the City of Pawtucket upon delivery to the Purchasing Agent.
- Bids will be opened publicly at a regularly scheduled purchasing board meeting, the date of which is the same as the RFP submission deadline provided in Section 1.0.
- Interpretations or Addenda: No oral interpretation will be made to any Bidder as to the meaning of the Contract Documents or any part thereof. Every request for such an interpretation shall be made in writing to the City of Pawtucket (hereinafter called the "Owner"). Any inquiry received seven or more days prior to the date fixed for opening of Bids will be given consideration. Every interpretation made to a Bidder will be in the form of an Addendum to the Contract Documents, and when issued, will be on file in the office of the Owner at least five days before Bids are opened. In addition, all Addenda will be mailed to each person holding Contract Documents, but it shall be the Bidder's responsibility to make inquiry as to the Addenda issued. All such Addenda shall become part of the Contract and all Bidders shall be bound by such Addenda, whether or not received by the Bidders.

- Each Bidder shall, upon request of the Owner, submit a detailed financial statement on a form furnish by the Owner for that purpose. The Owner shall have the right to take such steps as it deems necessary to determine the ability of the Bidder to perform his obligations under the Contract and the Bidder shall furnish the Owner all such information and data for this purpose as it may request. The right is reserved to reject any Bid where an investigation of the available evidence or information does not satisfy the Owner that the Bidder is qualified to carry out properly the terms of the Contract**.**

3.0 - Overview

3.1 Project Overview

The City of Pawtucket Department of Public Works ("DPW") seeks bids from qualified site construction contractors ("the Contractor") for the purpose of constructing concrete sidewalks throughout the City ("the Work" or "the Project"). Respondents to this RFP shall provide documentation satisfactory to the DPW that they have a minimum of three (3) years' experience successfully constructing sidewalks in a public right-of-way (ROW) setting.

Generally, the Contractor's scope of Work shall consist of repairing/adjusting or constructing new sidewalk elements, which includes, but is not limited to, the following efforts:

- Constructing Portland cement concrete or bituminous pavement walks
- Resetting or constructing new granite or precast concrete curbing
- Constructing ADA accessible curb ramps
- Adjusting existing utility structures and signage
- Incidental services including maintenance of temporary traffic control devices
- Administrative efforts, most critically: communication of Project schedule and coordination of site access with land owners

The Contractor shall be required to furnish all labor, materials, tools, equipment, and incidental items necessary to complete the Work per the specifications, estimated quantities, and scheduling requirements described herein. The specifications for construction shall be those provided in the Rhode Island Department of Transportation's (RIDOT) "Standard Specifications for Road and Bridge Construction," current edition and the associated Standard Construction Details provided in Appendix E. The Work shall also comply with the requirements of the 2010 Americans with Disabilities Act (ADA) Guidelines for Accessible Design.

3.2 Project Background

City ordinances require that the cost of all sidewalk construction commissioned by its DPW shall be borne one half by the City and one half by the abutting property owner. Accordingly, the DPW administers a "50-50 Sidewalk Program" per the following standard process:

1. Property owner files application to DPW for repair of the sidewalk adjacent to their property ("the Site"), which outlines the owner's desired scope of work.
2. DPW utilizes an engineering consultant ("the Project Engineer") to meet with the applicant, refine the scope of work, and finalize an estimate, which is then provided to the property owner for acceptance.
3. After receipt of the applicant's payment for one half of the estimated construction cost, the DPW issues the Contractor a written notice to proceed with construction at the Site. At this point, the Contractor is given 90 days to mobilize to the site and complete construction. The City remits payment to the Contractor following DPW's acceptance of the work.

Per this process, Work orders shall be issued to the Contractor twice annually: on or about May 15 and August 15. The Work must be performed within 90 days thereafter per the process outlined in Section 4.0. Work orders are issued per residents' applications for sidewalk repair filed at the DPW; as such, the precise quantity of Work has not yet been determined. Historically, approximately 30 Sites are addressed each year, resulting in an average contract value near $100,000.00.

4.0 - Scope of Work

4.1 Location

All Work shall be performed in the City of Pawtucket ("the City"), specifically: at sidewalks located within the various public ROWs of the City. Specific Work sites will be determined per applications received throughout the year.

4.2 General Requirements

4.2.1 Site Preparation

- At a minimum, the Contractor shall adhere to the guidance set forth in the Manual on Uniform Traffic Control Devices in establishing work zone temporary traffic controls. Additionally, the Contractor is advised that diversion or detour of automobile traffic, where necessary (as per City Ordinance 351-54), shall be the responsibility of the Pawtucket Police Department. The Contractor shall be responsible for scheduling Police details as necessary to facilitate construction. The costs associated with anticipated Police details shall not be included in the Contractor's bid, as these costs will be paid by DPW directly.
- The Contractor shall be responsible for notifying Dig-Safe (1-888-344-7233) in accordance with Rhode Island General Laws (RIGL) Chapter 39 prior to performing any construction commissioned under this Contract. However, the Contractor is advised that not all utility companies subscribe to the Dig Safe Program. It is the Contractor's responsibility to ensure that all utility companies have been notified and all utilities have been marked prior to commencing the work. The Contractor shall repair or replace, as necessary, any utility service damaged during the Work at no additional cost to the City.
- The Contractor shall be responsible for removing and/or protecting any obstacles (e.g. automobiles, Post Office mailboxes, etc.) that may interfere with the Work at the Site, and for coordinating this effort directly with the applicant or land owner adjacent to the Site. Immediately upon completion of the Work at a given Site, the Contractor shall be responsible for returning or restoring these features to their pre-construction state satisfactory to the DPW.

4.2.2 Project Schedule

The DPW administers the "50-50 Sidewalk Program" per the schedule included on the sample application form included as Appendix D. The DPW intends to collect applications and issue work orders to the Contractor twice per year in bulk fashion. Generally, the sequence of events that comprise each application's "life cycle" are as follows:

1. DPW collects applications during the application period. No action is taken in response to the application until the application deadline has passed.
2. After the deadline has passed, staff from DPW and its engineering consultant arrange to meet the applicant at the application site to review the applicant's requested scope of work, and refine the scope as necessary.
3. DPW, through its engineering consultant, produces a cost estimate based on the refined scope of work and provides this estimate to the applicant.
4. DPW receives payment, and issues the Contractor a notice to proceed (i.e. work order) per the schedule.
5. The Contractor must complete the Work within 90 days of work order issuance.

The Contractor shall complete all work orders issued per this Contract by November 15, 2016.

4.2.3 Prevailing Wage Requirements

Bidders are advised that payment of the local prevailing wage, as established by the Rhode Island Department of Labor and Training, is a requirement of this Project, as outlined in Appendix B. A copy of the current prevailing wage decision is included in this document as Appendix C. Bidders are advised that the City will not amend this document prior to the bid due date for the purpose of notifying bidders of a superseding wage decision(s). Bidders are expected to account for the prevailing wage rates applicable to this project in the formulation of their bid.

4.2.4 Payment Requisitions

The Contractor shall prepare draft requisitions for payment for the Project Engineer's review and approval and revise the requisitions as necessary prior to submission to the Owner (DPW).

The Owner reserves the right to withhold 5% of each progressive request for payment as retainage. The Owner shall release retainage payments per the terms outlined in Section 12.0 of this RFP.

4.3 Scope Detail

A general description of the work is included below. The comprehensive scope of work is intended to encompass all efforts necessary to construct sidewalks in accordance with the work order(s) issued by DPW, the RIDOT Standard Specifications for Road and Bridge Construction and the associated construction details (see Appendix E), and the 2010 ADA Standards for Accessible Design. This includes, but is not limited to, the construction activities listed below:

4.3.1 Portland Cement Concrete Sidewalk, 4" Thickness shall be performed in accordance with Section 905 of the RIDOT Standard Specifications and the construction details (RI Standard Detail 43.1.0, notably) included in Appendix E. Portland Cement Concrete Sidewalk, 4" Thickness shall be measured for payment by the Square Yard (SY).

4.3.2 Portland Cement Concrete Driveway, 8" Thickness shall be performed in accordance with Section 905 of the RIDOT Standard Specifications and the construction details (RI Standard Detail 43.5.0, notably) included in Appendix E.

Portland Cement Concrete Driveway, 8” Thickness shall be measured for payment by the Square Yard (SY).

4.3.3 Straight Precast Concrete Curb shall be performed in accordance with Section 906 of the RIDOT Standard Specifications and the construction details (RI Standard Detail 7.1.0, notably) included in Appendix E. Straight Precast Concrete Curb shall be measured for payment by the Linear Foot (LF).

4.3.4 Circular Precast Concrete Curb shall be performed in accordance with Section 906 of the RIDOT Standard Specifications and the construction details (RI Standard Details 7.1.0 and 7.6.0, notably) included in Appendix E. Circular Precast Concrete Curb shall be measured for payment by the Linear Foot (LF).

4.3.5 Precast Concrete Transition Curb 3’-0” Length shall be performed in accordance with Section 906 of the RIDOT Standard Specifications and the construction details (RI Standard Details 7.1.1 and 7.6.0, notably) included in Appendix E. Precast Concrete Transition Curb 3’-0” Length shall be measured for payment per each (EA).

4.3.6 Precast Concrete Curb 2’-0” Radius Corner shall be performed in accordance with Section 906 of the RIDOT Standard Specifications and the construction details (RI Standard Details 7.1.4 and 7.6.0, notably) included in Appendix E. Precast Concrete Curb 2’-0” Radius Corner shall be measured for payment per each (EA).

4.3.7 Precast Concrete Inlet Stone shall be performed in accordance with Section 906 of the RIDOT Standard Specifications and the construction details (RI Standard Detail 7.1.5, notably) included in Appendix E. Precast Concrete Inlet Stone shall be measured for payment per each (EA).

4.3.8 Straight Granite Curb shall be performed in accordance with Section 906 of the RIDOT Standard Specifications and the construction details (RI Standard Details 7.3.0 and 7.6.0, notably) included in Appendix E. Straight Granite Curb shall be measured for payment by the Linear Foot (LF).

4.3.9 Circular Granite Curb shall be performed in accordance with Section 906 of the RIDOT Standard Specifications and the construction details (RI Standard Details 7.3.0 and 7.6.0, notably) included in Appendix E. Circular Granite Curb shall be measured for payment by the Linear Foot (LF).

4.3.10 Granite Transition Curb 3’-0” Length shall be performed in accordance with Section 906 of the RIDOT Standard Specifications and the construction details (RI Standard Details 7.3.1 and 7.6.0, notably) included in Appendix E. Granite Transition Curb 3’-0” Length shall be measured for payment per each (EA).

4.3.11 Granite Curb 2’-0” Radius Corner shall be performed in accordance with Section 906 of the RIDOT Standard Specifications and the construction details (RI Standard Details 7.3.4 and 7.6.0, notably) included in Appendix E. Granite Curb 2’-0” Radius Corner shall be measured for payment per each (EA).

4.3.12 Granite Inlet Stone shall be performed in accordance with Section 906 of the RIDOT Standard Specifications and the construction details (RI Standard Detail 7.3.5, notably) included in Appendix E. Granite Inlet Stone shall be measured for payment per each (EA).

4.3.13 Remove, Handle, Haul, Trim, and Reset Curbing, Straight or Circular, All Types shall be performed in accordance with Section 906 of the RIDOT Standard Specifications and the construction details (RI Standard Detail 7.6.0,

notably) included in Appendix E. Remove, Handle, Haul, Trim, and Reset Curbing, Straight or Circular, All Types shall be measured for payment per Linear Foot (LF).

4.3.14 Gravel Borrow Subbase Course, 8" Depth shall be performed in accordance with Section 905 of the RIDOT Standard Specifications and the construction details (RI Standard Details 43.1.0 and 43.5.0, notably) included in Appendix E. Gravel Sidewalk Base, 8" Depth shall be measured for payment by the Square Yard (SY).

4.3.15 Bituminous Pavement, 3" Depth shall be performed in accordance with Section 410 of the RIDOT Standard Specifications. Bituminous Pavement, 3" Depth shall be measured for payment by the Square Yard (SY).

4.3.16 Adjust Utility Frame and Cover shall be performed in accordance with Section 707 of the RIDOT Standard Specifications. Adjust Utility Frame and Cover shall be measured for payment per Each (EA).

4.3.17 Adjust Curb Stop, Water Gate, or Gas Gate Box shall be performed in accordance with Section 713 of the RIDOT Standard Specifications. Adjust Curb Stop, Water Gate, or Gas Gate Box shall be measured for payment per Each (EA).

4.3.18 Reset Highway Bound shall be performed in accordance with Section 915 of the RIDOT Standard Specifications. Reset Highway Bound shall be measured for payment per Each (EA).

4.3.19 Saw Cut Bituminous Pavement or Sidewalk shall be performed in accordance with Section 932 of the RIDOT Standard Specifications. Saw Cut Bituminous Pavement or Sidewalk shall be measured for payment by the Linear Foot (LF).

4.3.20 Saw Cut Concrete Pavement or Sidewalk shall be performed in accordance with Section 932 of the RIDOT Standard Specifications. Saw Cut Concrete Pavement or Sidewalk shall be measured for payment by the Linear Foot (LF).

4.3.21 Remove and Dispose Bituminous Pavement or Sidewalk shall be performed in accordance with Section 201 of the RIDOT Standard Specifications. Remove and Dispose Bituminous Pavement or Sidewalk shall be measured for payment by the Square Yard (SY).

4.3.22 Remove and Dispose Concrete Pavement or Sidewalk shall be performed in accordance with Section 201 of the RIDOT Standard Specifications. Remove and Dispose Concrete Pavement or Sidewalk shall be measured for payment by the Square Yard (SY).

4.3.23 Remove and Dispose Curbing shall be performed in accordance with Section 201 of the RIDOT Standard Specifications. Remove and Dispose Curbing shall be measured for payment by the Linear Foot (LF).

4.3.24 Cut and Remove Tree and Completely Remove Stump (4"-24" Caliper) shall be performed in accordance with Section 201 of the RIDOT Standard Specifications. Cut and Remove Tree and Completely Remove Stump (4"-24" Caliper) shall be measured for payment per Each (EA).

4.3.25 Cut and Remove Tree and Completely Remove Stump (24"+ Caliper) shall be performed in accordance with Section 201 of the RIDOT Standard Specifications. Cut and Remove Tree and Completely Remove Stump (24"+ Caliper) shall be measured for payment per Each (EA).

4.3.26 Cut and Remove Tree and Partially Remove Stump (4”-24” Caliper) shall be performed in accordance with Section 201 of the RIDOT Standard Specifications. Cut and Remove Tree and Partially Remove Stump (4”-24” Caliper) shall be measured for payment per Each (EA).

4.3.27 Cut and Remove Tree and Partially Remove Stump (24”+ Caliper) shall be performed in accordance with Section 201 of the RIDOT Standard Specifications. Cut and Remove Tree and Partially Remove Stump (24”+ Caliper) shall be measured for payment per Each (EA).

4.3.28 Remove and Dispose Loam and Grass shall be performed in accordance with Section 201 of the RIDOT Standard Specifications. Remove and Dispose Loam and Grass shall be measured for payment by the Square Yard (SY).

4.3.29 Loam and Type 1 Seed shall be performed in accordance with Sections L.01 and L.02 of the RIDOT Standard Specifications. Loam and Type 1 Seed shall be measured for payment by the Square Yard (SY).

4.3.30 Remove and Reset Brick Pavers shall be performed in accordance with Technical Notes 14 and 14A issued by the Brick Industry Association, included in this RFP as Appendix F. Contractor shall assume that in-kind replacement of 30% of existing bricks with new bricks shall be necessary to perform this work. Remove and Reset Brick Pavers shall be shall be measured for payment by the Square Yard (SY).

4.3.31 Accessible Wheelchair Ramp with Precast Concrete Curbing shall be performed in accordance with Section 905 of the RIDOT Standard Specifications and the construction details (RI Standard Details 7.1.3, 43.3.0, and 43.3.1, notably) included in Appendix E. Accessible Wheelchair Ramp with Precast Concrete Curbing shall be shall be measured for payment per Each (EA).

4.3.32 Accessible Wheelchair Ramp with Granite Curbing shall be performed in accordance with Section 905 of the RIDOT Standard Specifications and the construction details (RI Standard Details 7.3.3, 43.3.0, and 43.3.1, notably) included in Appendix E. Accessible Wheelchair Ramp with Granite Curbing shall be shall be measured for payment per Each (EA).

5.0 - Insurance

The vendor shall maintain and keep in force such comprehensive general liability insurance as shall protect them from claims which may arise from operations under any contract entered into with the City of Pawtucket, whether such operations be by themselves or by anyone directly or indirectly employed by them.

The amounts of insurance shall be not less than $1,000,000.00 combined single limit for any one occurrence covering both bodily injury and property damage, including accidental death.

The City of Pawtucket shall be named as additional insured on the vendor's General Liability Policy.

The vendor shall maintain and keep in force such Workers' compensation insurance limits as required by the statutes of the State of Rhode Island, and Employer's Liability with limits no less than $500,000.

6.0 - Acknowledgement of Risk & Hold Harmless Agreement

In addition to the indemnity provisions in the City of Pawtucket's Terms and Conditions of Purchase and to the fullest extent permitted by law, the selected vendor, its officers, agents, servants, employees, parents, subsidiaries, partners, officers, directors, attorneys, insurers, and/or affiliates (Releasors) agree to release, waive, discharge and covenant not to sue the City of Pawtucket, its officers, agents, servants or employees (Releasees) from any and all liability, claims, cross-claims, rights in law or in equity, agreements, promises demands, actions and causes of action whatsoever arising out of or related to any loss, damage, expenses (including without limitation, all legal fees, expenses, interest and penalties) or injury (including death), of any type, kind or nature whatsoever, whether based in contract, tort, warranty, or other legal, statutory, or equitable theory of recovery, which relate to or arise out of the Releasors use of or presence in and/or on City of Pawtucket property. The Releasors agree to defend, indemnify and hold harmless the Releasees from (a) any and all claims, loss, liability, damages or costs by any person, firm, corporation or other entity claiming by, through or under Releasors in any capacity whatsoever, including all subrogation claims and/or claims for reimbursement, including any court costs and attorneys fees, that may incur due to Releasors use of or presence in and on City of Pawtucket property; and (b) any and all legal actions, including third-party actions, cross-actions, and/or claims for contribution and/or indemnity with respect to any claims by any other persons, entities, parties, which relate to or arise out of Releasors use of or presence in and on City of Pawtucket property.

The Releasors acknowledge the risks that may be involved and hazards connected with use of or presence in and on City of Pawtucket property but elect to provide services under any contract with the City of Pawtucket with full knowledge of such risks. Releasors also acknowledge that any loss, damage, and/or injury sustained by Releasors is not covered by Releasees insurance. Releasors agree to become fully aware of any safety risks involved with the performance of services under any contract with the City of Pawtucket and any safety precautions that need to be followed and agree to take all such precautions.

The duty to indemnify and/or hold harmless the City of Pawtucket shall not be limited by the insurance required under the City of Pawtucket Terms and Conditions of Purchase.

7.0 - Additional Insurance Requirements

In addition to the insurance provisions in the City of Pawtucket Terms and Conditions of Purchase, the liability insurance coverage, except Professional Liability, Errors and Omissions or Workers' Compensation insurance required for performance of a contract with the City of Pawtucket shall include the City of Pawtucket, its divisions, officers and employees as Additional Insureds but only with respect to the selected vendor's activities under the contract. The insurance required through a policy or endorsement shall include:

A. a Waiver of Subrogation waiving any right to recovery the insurance company may have against the City of Pawtucket; and

B. a provision that the selected vendor's insurance coverage shall be primary with respect to any insurance, self insurance or self retention maintained by the City of Pawtucket and that any insurance, self insurance or self retention maintained

by the City of Pawtucket shall be in excess of the selected vendor's insurance and shall not contribute.

There shall be no cancellation, material change, potential exhaustion of aggregate limits or non-renewal without thirty (30) days written notice from the selected vendor or its insurer(s) to the City of Pawtucket's Purchasing Agent. Any failure to comply with the reporting provision of this clause shall be grounds for immediate termination of the contract with the City of Pawtucket.

Insurance coverage required under the contract shall be obtained from insurance companies acceptable to the City of Pawtucket. The selected vendor shall pay for all deductibles, self insured retentions and/or self insurance included hereunder.

The City of Pawtucket's Purchasing Agent reserves the right to consider and accept alternative forms and plans of insurance or to require additional or more extensive coverage for any individual requirement.

8.0 - Proposal Content and Organization

All bids must be submitted on the forms supplied in Section 11.0 and shall be subject to all requirements of the Contract Documents, including these instructions to bidders. All bids must be regular in every respect and no interlineations, excisions or special conditions shall be made or included in the Bid Form by the Bidder. Pricing must include all costs as specified in this solicitation.

The Owner may consider as irregular any Bid on which there is an alteration of or departure from the Bid Form hereto attached and at its option may reject the same.

Bid Documents, including the Bid, the Bid Bond, the Non-Collusion Affidavit, the Anti-Kickback Acknowledgment, and the Statement of Bidder's Qualifications (if requested) shall be enclosed in a sealed envelope which shall be clearly labeled with the words, **"Citywide Sidewalk Construction, Bid #16-007C**", as well as name of Bidder, and date of bid opening.

All Bid Forms must be signed.

If the Contract is awarded, it will be awarded by the Owner to a responsible Bidder on the basis of the lowest qualified bid price and the selected Alternative Bid items, if any.

Vendors must include on the Bid Form a list of at least four (4) references with whom they have contracted to do similar work by including the company name, telephone number, contact person, and number of years they have served this customer. Preferably, references should be municipalities which are of approximate size as the City of Pawtucket, and a website address should be included if available.

Respondents must also include an overview of their company's experience including, but not limited to, the number of years the company has been providing these services, the size of the company (including the number of employees and locations), a description of work or list of projects undertaken that is similar to what is being requested in this RFP, and, if applicable, certifications that show a knowledge of equipment that would be serviced or provided under this contract. References and documentation of experience performing similar work shall correspond wherever possible.

If any subcontractors are to be used in the performance of any work contracted for under this RFP, please list their name(s), contractor license #, address and phone number, and specific description of the subcontract work to be performed. See Proposed Subcontractors form.

Two (2) copies of your proposal, one (1) original and one (1) copy, must be submitted at the time of submission. Proposals must be in the following format:

- Bid Form
- Company overview
  - Length of time your firm has been in business
  - Length of time at current address
  - Documentation of experience performing sidewalk construction in public rights-of-way, as noted in Section 3.1.
- All licensing (List types and business license number(s)), certification and permits as required in the Scope of Work

Please state any and all additions, deletions, and exceptions, if any, that you are taking to any portion of this proposal. If not addressed specifically, the City of Pawtucket assumes that the vendor will adhere to all terms and conditions listed in this RFP.

Submission of a proposal is acknowledgement and acceptance of the City of Pawtucket's Purchasing Rules and Regulations and General Terms and Conditions of Purchase.

9.0 - Evaluation Criteria

The evaluation of proposals will be conducted in a time frame convenient to the City.

The City of Pawtucket reserves the right to award on the basis of cost alone, accept or reject any or all proposals, and to otherwise act in its best interest including, but not limited to, directly negotiating with any Vendor who submits a proposal in response to this RFP and to award a contract based upon the results of those negotiations alone. The City reserves the right to consider as unqualified to do the work of general construction any Bidder who does not habitually perform with his own forces the major portions of the work involved in construction of the Improvements embraced in this Contract.

Further, the City reserves the right to waive irregularities it may deem minor in its consideration of proposals.

Proposals found to be technically or substantially non-responsive at any point in the evaluation process will be rejected and not considered further. The City of Pawtucket may elect to require presentations(s) by vendors in consideration for award.

Proposals will be evaluated in three (3) phases:

1. The first phase is an initial review to determine if the proposal, as submitted, is complete. To be complete, a proposal must meet all the requirements of this RFP.
2. The second phase is an in-depth analysis and review based on criteria below and their associated weights.

Evaluation Criteria	Importance
Qualifications	30%
References	10%

Price	60%

3. The third is a comparison of each proposal's weighted evaluation relative to the costs proposed.

In the event that the City requires further information and/or a demonstration of any equipment or process offered in any proposal, all vendors asked for same will do so at no cost to the City.

10.0 - Miscellaneous

- Vendors shall at all times comply with all federal, state, and local laws, ordinances and regulations and shall defend, indemnify and save harmless the City of Pawtucket against any claims arising from the violation of any such laws, ordinances and regulations, including but not limited to challenges as to the legality of any and all vendor installations.
- The City is exempt from the payment of the Rhode Island State Sales Tax under the 1956 General Laws of the State of Rhode Island, 44-18-30, Paragraph 1, as amended. Further, the City is also exempt from the payment of any excise or federal transportation taxes. The proposal prices submitted must be exclusive of same, and will be so construed.
- The City of Pawtucket reserves the right to cancel an agreement with the Vendor with thirty (30) days written notice and to award the contract to the next highest evaluated bidder.
- The City of Pawtucket reserves the right to renegotiate the terms of this contract with the Vendor for subsequent years provided the Vendor agrees to the contract terms for the renewal period.
- The payment and performance of any obligations under this contract for years beyond the first fiscal year are subject to the availability of funds.
- The City reserves the right to pay the selected Vendor via credit card at its sole discretion.

11.0 – Bid Form

16-007C – Citywide Sidewalk Construction

Date: _____

Submitted By: _____

(Include Name, Address and Telephone No.) _____

_____

_____

Name and remittance address that will appear on invoices:	Physical address of business:
_____	_____
_____	_____
_____	_____
_____	_____

General Information

Is your firm a sole proprietorship doing business under a different name? ____Yes _____ No

If yes, please indicate sole proprietorship, a name, and the name you are doing business under.

_____

_____

Is your firm incorporated? ____Yes _____ No

Will any of the work spelled out in this bid be outsourced? ____Yes _____ No

If so, please explain below:

_____

_____

_____

Have you or your firm been subject to suspension, debarment or criminal conviction by the City of Pawtucket, the State of Rhode Island, or any other jurisdiction?
Yes: _____ No: _____

Have the City of Pawtucket and/or the State of Rhode Island ever terminated contracts with your firm for cause?
Yes: _____ No: _____

Has your firm ever withdrawn from a contract with the City of Pawtucket and/or the State of Rhode Island during its performance?
Yes: _____ No: _____

Have you or your firm been involved in litigation against the City of Pawtucket and/or the State of Rhode Island.
Yes: _____ No: _____

If you answered yes to any of the foregoing, please explain the circumstances below. If you or your firm has been involved in litigation against the City of Pawtucket and/or the State of Rhode Island, please include the case caption, case number and status. (If more space is needed, please attach separate sheet and submit with the bid.)

_____

_____

_____

Is your company bonded? Yes ____ No ____

Please describe the nature and extent of all insurance coverage:

_____

_____

_____

Addenda

The following Addenda have been received. The noted modifications to the Bidding Documents have been considered and all costs are included in the Bid Sum.

Addendum #1, Dated:_____

Addendum #2, Dated:_____

Addendum #3, Dated:_____

References

Please list at least four (4) companies' with whom you have contracted to provide similar services. Preferably, references should be municipalities which are of approximate size as the City of Pawtucket, and a website address should be included if available.

Reference #1

Company Name:_____

Contact Person:_____Telephone #: _____

Contract Dates: _____ To _____

Website Address: _____

Reference # 2

Company Name:_____

Contact Person:_____Telephone #: _____

Contract Dates: _____ To _____

Website Address: _____

Reference # 3

Company Name:_____

Contact Person:_____Telephone #: _____

Contract Dates: _____ To _____

Website Address: _____

Reference # 4

Company Name:_____

Contact Person:_____Telephone #: _____

Contract Dates: _____ To _____

Website Address: _____

Pricing Proposal

16-007C

Having examined RFP #16-007C, we propose to enter into a contract to perform the Work, Citywide Sidewalk Construction, per the bid specifications outlined herein for the costs listed below, subject to the additions and deductions according to the terms of the Contract Documents:

ITEM NO.	ITEM DESCRIPTION	APPROX. QUANTITY	UNIT OF MEASURE	UNIT PRICE (Dollars & Cents)	SUBTOTAL (Dollars & Cents)
1	**PORTLAND CEMENT CONCRETE SIDEWALK**	1114	SY (SQUARE YARD)	_____	_____
	Unit Price In Words:	_____		per SY	
2	**PORTLAND CEMENT CONCRETE DRIVEWAY**	347	SY (SQUARE YARD)	_____	_____
	Unit Price In Words:	_____		per SY	
3	**STRAIGHT PRECAST CONCRETE CURB**	220	LF (LINEAR FOOT)	_____	_____
	Unit Price In Words:	_____		per LF	
4	**CIRCULAR PRECAST CONCRETE CURB**	40	LF (LINEAR FOOT)	_____	_____
	Unit Price In Words:	_____		per LF	
5	**PRECAST CONCRETE TRANSITION CURB 3'-0" LENGTH**	4	EA (EACH)	_____	_____
	Unit Price In Words:	_____		per EA	
6	**PRECAST CONCRETE CURB 2'-0" RADIUS CORNER**	8	EA (EACH)	_____	_____
	Unit Price In Words:	_____		per EA	

CARRIED FORWARD: _____

ITEM NO.	ITEM DESCRIPTION	APPROX. QUANTITY	UNIT OF MEASURE	UNIT PRICE (Dollars & Cents)	SUBTOTAL (Dollars & Cents)
7	**PRECAST CONCRETE INLET STONE**	2	EA (EACH)	_____	_____
	Unit Price In Words: _____			per EA	
8	**STRAIGHT GRANITE CURB**	80	LF (LINEAR FOOT)	_____	_____
	Unit Price In Words: _____			per LF	
9	**CIRCULAR GRANITE CURB**	40	LF (LINEAR FOOT)	_____	_____
	Unit Price In Words: _____			per LF	
10	**GRANITE TRANSITION CURB, 3'-0" LENGTH**	4	EA (EACH)	_____	_____
	Unit Price In Words: _____			per EA	
11	**GRANITE CURB 2'-0" RADIUS CORNER**	8	EA (EACH)	_____	_____
	Unit Price In Words: _____			per EA	
12	**GRANITE INLET STONE**	2	EA (EACH)	_____	_____
	Unit Price In Words: _____			per EA	
13	**REMOVE, HANDLE, HAUL, TRIM, AND RESET CURBING, STRAIGHT OR CIRCULAR, ALL TYPES**	749	LF (LINEAR FOOT)	_____	_____
	Unit Price In Words: _____			per LF	

CARRIED FORWARD: _____

ITEM NO.	ITEM DESCRIPTION	APPROX. QUANTITY	UNIT OF MEASURE	UNIT PRICE (Dollars & Cents)		SUBTOTAL (Dollars & Cents)
14	**GRAVEL BORROW SUBBASE COURSE, 8" DEPTH**	1462	SY (SQUARE YARD)	_____		_____
	Unit Price In Words: _____				per SY	
15	**BITUMINOUS PAVEMENT 3" DEPTH**	268	SY (SQUARE YARD)	_____		_____
	Unit Price In Words: _____				per SY	
16	**ADJUST UTILITY FRAME AND COVER**	4	EA (EACH)	_____		_____
	Unit Price In Words: _____				per EA	
17	**ADJUST CURB STOP, WATER GATE, OR GAS GATE BOX**	55	EA (EACH)	_____		_____
	Unit Price In Words: _____				per EA	
18	**RESET HIGHWAY BOUND**	4	EA (EACH)	_____		_____
	Unit Price In Words: _____				per EA	
19	**SAW CUT BITUMINOUS PAVEMENT OR SIDEWALK**	2167	LF (LINEAR FOOT)	_____		_____
	Unit Price In Words: _____				per LF	
20	**SAW CUT CONCRETE PAVEMENT OR SIDEWALK**	300	LF (LINEAR FOOT)	_____		_____
	Unit Price In Words: _____				per LF	

CARRIED FORWARD: _____

ITEM NO.	ITEM DESCRIPTION	APPROX. QUANTITY	UNIT OF MEASURE	UNIT PRICE (Dollars & Cents)		SUBTOTAL (Dollars & Cents)
21	**REMOVE AND DISPOSE BITUMINOUS PAVEMENT OR SIDEWALK**	1046	SY (SQUARE YARD)	_____		_____
	Unit Price In Words:	_____			per SY	
22	**REMOVE AND DISPOSE CONCRETE PAVEMENT OR SIDEWALK**	720	SY (SQUARE YARD)	_____		_____
	Unit Price In Words:	_____			per SY	
23	**REMOVE AND DISPOSE CURBING, ALL TYPES**	688	LF (LINEAR FOOT)	_____		_____
	Unit Price In Words:	_____			per LF	
24	**CUT AND REMOVE TREE & COMPLETELY REMOVE STUMP (4"-24" CALIPER)**	8	EA (EACH)	_____		_____
	Unit Price In Words:	_____			per EA	
25	**CUT AND REMOVE TREE & COMPLETELY REMOVE STUMP (24"+ CALIPER)**	2	EA (EACH)	_____		_____
	Unit Price In Words:	_____			per EA	
26	**CUT AND REMOVE TREE & PARTIALLY REMOVE STUMP (4"-24" CALIPER)**	8	EA (EACH)	_____		_____
	Unit Price In Words:	_____			per EA	
27	**CUT AND REMOVE TREE & PARTIALLY REMOVE STUMP (24"+ CALIPER)**	2	EA (EACH)	_____		_____
	Unit Price In Words:	_____			per EA	

CARRIED FORWARD: _____

ITEM NO.	ITEM DESCRIPTION	APPROX. QUANTITY	UNIT OF MEASURE	UNIT PRICE (Dollars & Cents)		SUBTOTAL (Dollars & Cents)
28	**REMOVE AND DISPOSE LOAM AND GRASS**	10	SY (SQUARE YARD)	_____		_____
	Unit Price In Words: _____				per SY	
29	**LOAM AND TYPE 1 SEED**	10	SY (SQUARE YARD)	_____		_____
	Unit Price In Words: _____				per SY	
30	**REMOVE AND RESET BRICK PAVERS**	30	SY (SQUARE YARD)	_____		_____
	Unit Price In Words: _____				per SY	
31	**ACCESSIBLE WHEELCHAIR RAMP WITH GRANITE CURB**	8	EA (EACH)	_____		_____
	Unit Price In Words: _____				per EA	
32	**ACCESSIBLE WHEELCHAIR RAMP WITH PRECAST CONCRETE CURB**	8	EA (EACH)	_____		_____
	Unit Price In Words: _____				per EA	

TOTAL BID: _____

TOTAL BID IN WORDS: _____

<u>Note</u>: Total Bid shown above shall match Total Cost shown on the next page of this bid form. All project costs including labor, equipment, materials, overhead, and profit to complete the Work shall be included.

Pricing Proposal

16-007C

Having examined RFP #16-007C, we propose to enter into a contract to perform the Work, Citywide Sidewalk Construction, per the bid specifications outlined herein for the cost listed below, subject to the additions and deductions according to the terms of the Contract Documents:

The Total Cost for Citywide Sidewalk Construction is:

$				,				,				.		

Numeric

_____

Written

Bid Form Signature

_____

(Bidder Name – Please Print)

By:_____

(Signature)

Title:_____

***** ***BID FORM MUST BE SIGNED*** *****

12 – General Conditions – AIA Document A201

GENERAL CONDITIONS

AIA DOCUMENT A201, 2007 EDITION

PART I – GENERAL

DESCRIPTION

A. AIA Document A201, General Conditions of the Contract for Construction, Sixteenth Edition, 2007.

DRAFT

AIA® Document A201™ – 2007

General Conditions of the Contract for Construction

for the following PROJECT:
(Name and location or address)
« -»CITYWIDE SIDEWALK CONSTRUCTION
« »PAWTUCKET, RHODE ISLAND

THE OWNER:
(Name, legal status and address)
« »« »CITY OF PAWTUCKET
« »

THE ARCHITECT:
(Name, legal status and address)
« »« »TO BE DETERMINED
« »

ADDITIONS AND DELETIONS:
The author of this document has added information needed for its completion. The author may also have revised the text of the original AIA standard form. An *Additions and Deletions Report* that notes added information as well as revisions to the standard form text is available from the author and should be reviewed.

This document has important legal consequences. Consultation with an attorney is encouraged with respect to its completion or modification.

TABLE OF ARTICLES

1 GENERAL PROVISIONS

2 OWNER

3 CONTRACTOR

4 ARCHITECT

5 SUBCONTRACTORS

6 CONSTRUCTION BY OWNER OR BY SEPARATE CONTRACTORS

7 CHANGES IN THE WORK

8 TIME

9 PAYMENTS AND COMPLETION

10 PROTECTION OF PERSONS AND PROPERTY

11 INSURANCE AND BONDS

12 UNCOVERING AND CORRECTION OF WORK

13 MISCELLANEOUS PROVISIONS

14 TERMINATION OR SUSPENSION OF THE CONTRACT

15 CLAIMS AND DISPUTES

AIA Document A201™ – 2007. Copyright © 1911, 1915, 1918, 1925, 1937, 1951, 1958, 1961, 1963, 1966, 1970, 1976, 1987, 1997 and 2007 by The American Institute of Architects. All rights reserved. **WARNING:** This AIA® Document is protected by U.S. Copyright Law and International Treaties. Unauthorized reproduction or distribution of this AIA® Document, or any portion of it, may result in severe civil and criminal penalties, and will be prosecuted to the maximum extent possible under the law. This draft was produced by AIA software at 13:27:21 on 10/31/2013 under Order No.4888000083_1 which expires on 02/17/2014, and is not for resale.
User Notes: (1198933826)

INDEX
(Topics and numbers in bold are section headings.)

Acceptance of Nonconforming Work
9.6.6, 9.9.3, **12.3**
Acceptance of Work
9.6.6, 9.8.2, 9.9.3, 9.10.1, 9.10.3, 12.3
Access to Work
3.16, 6.2.1, 12.1
Accident Prevention
10
Acts and Omissions
3.2, 3.3.2, 3.12.8, 3.18, 4.2.3, 8.3.1, 9.5.1, 10.2.5, 10.2.8, 13.4.2, 13.7, 14.1, 15.2
Addenda
1.1.1, 3.11
Additional Costs, Claims for
3.7.4, 3.7.5, 6.1.1, 7.3.7.5, 10.3, 15.1.4
Additional Inspections and Testing
9.4.2, 9.8.3, 12.2.1, **13.5**
Additional Insured
11.1.4
Additional Time, Claims for
3.2.4, 3.7.4, 3.7.5, 3.10.2, 8.3.2, **15.1.5**
Administration of the Contract
3.1.3, **4.2**, 9.4, 9.5
Advertisement or Invitation to Bid
1.1.1
Aesthetic Effect
4.2.13
Allowances
3.8, 7.3.8
All-risk Insurance
11.3.1, 11.3.1.1
Applications for Payment
4.2.5, 7.3.9, 9.2, **9.3**, 9.4, 9.5.1, 9.6.3, 9.7, 9.10, 11.1.3
Approvals
2.1.1, 2.2.2, 2.4, 3.1.3, 3.10.2, 3.12.8, 3.12.9, 3.12.10, 4.2.7, 9.3.2, 13.5.1
Arbitration
8.3.1, 11.3.10, 13.1, 15.3.2, **15.4**
ARCHITECT
4
Architect, Definition of
4.1.1
Architect, Extent of Authority
2.4, 3.12.7, 4.1, 4.2, 5.2, 6.3, 7.1.2, 7.3.7, 7.4, 9.2, 9.3.1, 9.4, 9.5, 9.6.3, 9.8, 9.10.1, 9.10.3, 12.1, 12.2.1, 13.5.1, 13.5.2, 14.2.2, 14.2.4, 15.1.3, 15.2.1
Architect, Limitations of Authority and Responsibility
2.1.1, 3.12.4, 3.12.8, 3.12.10, 4.1.2, 4.2.1, 4.2.2, 4.2.3, 4.2.6, 4.2.7, 4.2.10, 4.2.12, 4.2.13, 5.2.1, 7.4, 9.4.2, 9.5.3, 9.6.4, 15.1.3, 15.2
Architect's Additional Services and Expenses
2.4, 11.3.1.1, 12.2.1, 13.5.2, 13.5.3, 14.2.4
Architect's Administration of the Contract
3.1.3, 4.2, 3.7.4, 15.2, 9.4.1, 9.5
Architect's Approvals
2.4, 3.1.3, 3.5, 3.10.2, 4.2.7
Architect's Authority to Reject Work
3.5, 4.2.6, 12.1.2, 12.2.1
Architect's Copyright
1.1.7, 1.5
Architect's Decisions
3.7.4, 4.2.6, 4.2.7, 4.2.11, 4.2.12, 4.2.13, 4.2.14, 6.3, 7.3.7, 7.3.9, 8.1.3, 8.3.1, 9.2, 9.4.1, 9.5, 9.8.4, 9.9.1, 13.5.2, 15.2, 15.3
Architect's Inspections
3.7.4, 4.2.2, 4.2.9, 9.4.2, 9.8.3, 9.9.2, 9.10.1, 13.5
Architect's Instructions
3.2.4, 3.3.1, 4.2.6, 4.2.7, 13.5.2
Architect's Interpretations
4.2.11, 4.2.12
Architect's Project Representative
4.2.10
Architect's Relationship with Contractor
1.1.2, 1.5, 3.1.3, 3.2.2, 3.2.3, 3.2.4, 3.3.1, 3.4.2, 3.5, 3.7.4, 3.7.5, 3.9.2, 3.9.3, 3.10, 3.11, 3.12, 3.16, 3.18, 4.1.2, 4.1.3, 4.2, 5.2, 6.2.2, 7, 8.3.1, 9.2, 9.3, 9.4, 9.5, 9.7, 9.8, 9.9, 10.2.6, 10.3, 11.3.7, 12, 13.4.2, 13.5, 15.2
Architect's Relationship with Subcontractors
1.1.2, 4.2.3, 4.2.4, 4.2.6, 9.6.3, 9.6.4, 11.3.7
Architect's Representations
9.4.2, 9.5.1, 9.10.1
Architect's Site Visits
3.7.4, 4.2.2, 4.2.9, 9.4.2, 9.5.1, 9.9.2, 9.10.1, 13.5
Asbestos
10.3.1
Attorneys' Fees
3.18.1, 9.10.2, 10.3.3
Award of Separate Contracts
6.1.1, 6.1.2
Award of Subcontracts and Other Contracts for Portions of the Work
5.2
Basic Definitions
1.1
Bidding Requirements
1.1.1, 5.2.1, 11.4.1
Binding Dispute Resolution
9.7, 11.3.9, 11.3.10, 13.1, 15.2.5, 15.2.6.1, 15.3.1, 15.3.2, 15.4.1
Boiler and Machinery Insurance
11.3.2
Bonds, Lien
7.3.7.4, 9.10.2, 9.10.3
Bonds, Performance, and Payment
7.3.7.4, 9.6.7, 9.10.3, 11.3.9, **11.4**
Building Permit
3.7.1
Capitalization
1.3

AIA Document A201™ – 2007. Copyright © 1911, 1915, 1918, 1925, 1937, 1951, 1958, 1961, 1963, 1966, 1970, 1976, 1987, 1997 and 2007 by The American Institute of Architects. All rights reserved. **WARNING:** This AIA® Document is protected by U.S. Copyright Law and International Treaties. Unauthorized reproduction or distribution of this AIA® Document, or any portion of it, may result in severe civil and criminal penalties, and will be prosecuted to the maximum extent possible under the law. This draft was produced by AIA software at 13:27:21 on 10/31/2013 under Order No.4888000083_1 which expires on 02/17/2014, and is not for resale.
User Notes: (1198933826)

Certificate of Substantial Completion
9.8.3, 9.8.4, 9.8.5
Certificates for Payment
4.2.1, 4.2.5, 4.2.9, 9.3.3, **9.4**, 9.5, 9.6.1, 9.6.6, 9.7, 9.10.1, 9.10.3, 14.1.1.3, 14.2.4, 15.1.3
Certificates of Inspection, Testing or Approval
13.5.4
Certificates of Insurance
9.10.2, 11.1.3
Change Orders
1.1.1, 2.4, 3.4.2, 3.7.4, 3.8.2.3, 3.11, 3.12.8, 4.2.8, 5.2.3, 7.1.2, 7.1.3, **7.2**, 7.3.2, 7.3.6, 7.3.9, 7.3.10, 8.3.1, 9.3.1.1, 9.10.3, 10.3.2, 11.3.1.2, 11.3.4, 11.3.9, 12.1.2, 15.1.3
Change Orders, Definition of
7.2.1
CHANGES IN THE WORK
2.2.1, 3.11, 4.2.8, **7**, 7.2.1, 7.3.1, 7.4, 8.3.1, 9.3.1.1, 11.3.9
Claims, Definition of
15.1.1
CLAIMS AND DISPUTES
3.2.4, 6.1.1, 6.3, 7.3.9, 9.3.3, 9.10.4, 10.3.3, **15**, 15.4
Claims and Timely Assertion of Claims
15.4.1
Claims for Additional Cost
3.2.4, 3.7.4, 6.1.1, 7.3.9, 10.3.2, **15.1.4**
Claims for Additional Time
3.2.4, 3.7.4, 6.1.1, 8.3.2, 10.3.2, **15.1.5**
Concealed or Unknown Conditions, Claims for
3.7.4
Claims for Damages
3.2.4, 3.18, 6.1.1, 8.3.3, 9.5.1, 9.6.7, 10.3.3, 11.1.1, 11.3.5, 11.3.7, 14.1.3, 14.2.4, 15.1.6
Claims Subject to Arbitration
15.3.1, 15.4.1
Cleaning Up
3.15, 6.3
Commencement of the Work, Conditions Relating to
2.2.1, 3.2.2, 3.4.1, 3.7.1, 3.10.1, 3.12.6, 5.2.1, 5.2.3, 6.2.2, 8.1.2, 8.2.2, 8.3.1, 11.1, 11.3.1, 11.3.6, 11.4.1, 15.1.4
Commencement of the Work, Definition of
8.1.2
Communications Facilitating Contract Administration
3.9.1, **4.2.4**
Completion, Conditions Relating to
3.4.1, 3.11, 3.15, 4.2.2, 4.2.9, 8.2, 9.4.2, 9.8, 9.9.1, 9.10, 12.2, 13.7, 14.1.2
COMPLETION, PAYMENTS AND
9
Completion, Substantial
4.2.9, 8.1.1, 8.1.3, 8.2.3, 9.4.2, 9.8, 9.9.1, 9.10.3, 12.2, 13.7
Compliance with Laws
1.6, 3.2.3, 3.6, 3.7, 3.12.10, 3.13, 4.1.1, 9.6.4, 10.2.2, 11.1, 11.3, 13.1, 13.4, 13.5.1, 13.5.2, 13.6, 14.1.1, 14.2.1.3, 15.2.8, 15.4.2, 15.4.3
Concealed or Unknown Conditions
3.7.4, 4.2.8, 8.3.1, 10.3
Conditions of the Contract
1.1.1, 6.1.1, 6.1.4
Consent, Written
3.4.2, 3.7.4, 3.12.8, 3.14.2, 4.1.2, 9.3.2, 9.8.5, 9.9.1, 9.10.2, 9.10.3, 11.3.1, 13.2, 13.4.2, 15.4.4.2
Consolidation or Joinder
15.4.4
CONSTRUCTION BY OWNER OR BY SEPARATE CONTRACTORS
1.1.4, **6**
Construction Change Directive, Definition of
7.3.1
Construction Change Directives
1.1.1, 3.4.2, 3.12.8, 4.2.8, 7.1.1, 7.1.2, 7.1.3, **7.3**, 9.3.1.1
Construction Schedules, Contractor's
3.10, 3.12.1, 3.12.2, 6.1.3, 15.1.5.2
Contingent Assignment of Subcontracts
5.4, 14.2.2.2
Continuing Contract Performance
15.1.3
Contract, Definition of
1.1.2
CONTRACT, TERMINATION OR SUSPENSION OF THE
5.4.1.1, 11.3.9, **14**
Contract Administration
3.1.3, 4, 9.4, 9.5
Contract Award and Execution, Conditions Relating to
3.7.1, 3.10, 5.2, 6.1, 11.1.3, 11.3.6, 11.4.1
Contract Documents, Copies Furnished and Use of
1.5.2, 2.2.5, 5.3
Contract Documents, Definition of
1.1.1
Contract Sum
3.7.4, 3.8, 5.2.3, 7.2, 7.3, 7.4, **9.1**, 9.4.2, 9.5.1.4, 9.6.7, 9.7, 10.3.2, 11.3.1, 14.2.4, 14.3.2, 15.1.4, 15.2.5
Contract Sum, Definition of
9.1
Contract Time
3.7.4, 3.7.5, 3.10.2, 5.2.3, 7.2.1.3, 7.3.1, 7.3.5, 7.4, 8.1.1, 8.2.1, 8.3.1, 9.5.1, 9.7, 10.3.2, 12.1.1, 14.3.2, 15.1.5.1, 15.2.5
Contract Time, Definition of
8.1.1
CONTRACTOR
3
Contractor, Definition of
3.1, 6.1.2

AIA Document A201™ – 2007. Copyright © 1911, 1915, 1918, 1925, 1937, 1951, 1958, 1961, 1963, 1966, 1970, 1976, 1987, 1997 and 2007 by The American Institute of Architects. All rights reserved. **WARNING:** This AIA® Document is protected by U.S. Copyright Law and International Treaties. Unauthorized reproduction or distribution of this AIA® Document, or any portion of it, may result in severe civil and criminal penalties, and will be prosecuted to the maximum extent possible under the law. This draft was produced by AIA software at 13:27:21 on 10/31/2013 under Order No.4888000083_1 which expires on 02/17/2014, and is not for resale.
User Notes: (1198933826)

Contractor's Construction Schedules
3.10, 3.12.1, 3.12.2, 6.1.3, 15.1.5.2
Contractor's Employees
3.3.2, 3.4.3, 3.8.1, 3.9, 3.18.2, 4.2.3, 4.2.6, 10.2, 10.3, 11.1.1, 11.3.7, 14.1, 14.2.1.1
Contractor's Liability Insurance
11.1
Contractor's Relationship with Separate Contractors and Owner's Forces
3.12.5, 3.14.2, 4.2.4, 6, 11.3.7, 12.1.2, 12.2.4
Contractor's Relationship with Subcontractors
1.2.2, 3.3.2, 3.18.1, 3.18.2, 5, 9.6.2, 9.6.7, 9.10.2, 11.3.1.2, 11.3.7, 11.3.8
Contractor's Relationship with the Architect
1.1.2, 1.5, 3.1.3, 3.2.2, 3.2.3, 3.2.4, 3.3.1, 3.4.2, 3.5, 3.7.4, 3.10, 3.11, 3.12, 3.16, 3.18, 4.1.3, 4.2, 5.2, 6.2.2, 7, 8.3.1, 9.2, 9.3, 9.4, 9.5, 9.7, 9.8, 9.9, 10.2.6, 10.3, 11.3.7, 12, 13.5, 15.1.2, 15.2.1
Contractor's Representations
3.2.1, 3.2.2, 3.5, 3.12.6, 6.2.2, 8.2.1, 9.3.3, 9.8.2
Contractor's Responsibility for Those Performing the Work
3.3.2, 3.18, 5.3, 6.1.3, 6.2, 9.5.1, 10.2.8
Contractor's Review of Contract Documents
3.2
Contractor's Right to Stop the Work
9.7
Contractor's Right to Terminate the Contract
14.1, 15.1.6
Contractor's Submittals
3.10, 3.11, 3.12.4, 4.2.7, 5.2.1, 5.2.3, 9.2, 9.3, 9.8.2, 9.8.3, 9.9.1, 9.10.2, 9.10.3, 11.1.3, 11.4.2
Contractor's Superintendent
3.9, 10.2.6
Contractor's Supervision and Construction Procedures
1.2.2, 3.3, 3.4, 3.12.10, 4.2.2, 4.2.7, 6.1.3, 6.2.4, 7.1.3, 7.3.5, 7.3.7, 8.2, 10, 12, 14, 15.1.3
Contractual Liability Insurance
11.1.1.8, 11.2
Coordination and Correlation
1.2, 3.2.1, 3.3.1, 3.10, 3.12.6, 6.1.3, 6.2.1
Copies Furnished of Drawings and Specifications
1.5, 2.2.5, 3.11
Copyrights
1.5, **3.17**
Correction of Work
2.3, 2.4, 3.7.3, 9.4.2, 9.8.2, 9.8.3, 9.9.1, 12.1.2, **12.2**
Correlation and Intent of the Contract Documents
1.2
Cost, Definition of
7.3.7
Costs
2.4, 3.2.4, 3.7.3, 3.8.2, 3.15.2, 5.4.2, 6.1.1, 6.2.3, 7.3.3.3, 7.3.7, 7.3.8, 7.3.9, 9.10.2, 10.3.2, 10.3.6, 11.3, 12.1.2, 12.2.1, 12.2.4, 13.5, 14
Cutting and Patching
3.14, 6.2.5
Damage to Construction of Owner or Separate Contractors
3.14.2, 6.2.4, 10.2.1.2, 10.2.5, 10.4, 11.1.1, 11.3, 12.2.4
Damage to the Work
3.14.2, 9.9.1, 10.2.1.2, 10.2.5, 10.4, 11.3.1, 12.2.4
Damages, Claims for
3.2.4, 3.18, 6.1.1, 8.3.3, 9.5.1, 9.6.7, 10.3.3, 11.1.1, 11.3.5, 11.3.7, 14.1.3, 14.2.4, 15.1.6
Damages for Delay
6.1.1, 8.3.3, 9.5.1.6, 9.7, 10.3.2
Date of Commencement of the Work, Definition of
8.1.2
Date of Substantial Completion, Definition of
8.1.3
Day, Definition of
8.1.4
Decisions of the Architect
3.7.4, 4.2.6, 4.2.7, 4.2.11, 4.2.12, 4.2.13, 15.2, 6.3, 7.3.7, 7.3.9, 8.1.3, 8.3.1, 9.2, 9.4, 9.5.1, 9.8.4, 9.9.1, 13.5.2, 14.2.2, 14.2.4, 15.1, 15.2
Decisions to Withhold Certification
9.4.1, **9.5**, 9.7, 14.1.1.3
Defective or Nonconforming Work, Acceptance, Rejection and Correction of
2.3, 2.4, 3.5, 4.2.6, 6.2.5, 9.5.1, 9.5.2, 9.6.6, 9.8.2, 9.9.3, 9.10.4, 12.2.1
Definitions
1.1, 2.1.1, 3.1.1, 3.5, 3.12.1, 3.12.2, 3.12.3, 4.1.1, 15.1.1, 5.1, 6.1.2, 7.2.1, 7.3.1, 8.1, 9.1, 9.8.1
Delays and Extensions of Time
3.2, 3.7.4, 5.2.3, 7.2.1, 7.3.1, 7.4, **8.3**, 9.5.1, 9.7, 10.3.2, 10.4, 14.3.2, 15.1.5, 15.2.5
Disputes
6.3, 7.3.9, 15.1, 15.2
Documents and Samples at the Site
3.11
Drawings, Definition of
1.1.5
Drawings and Specifications, Use and Ownership of
3.11
Effective Date of Insurance
8.2.2, 11.1.2
Emergencies
10.4, 14.1.1.2, 15.1.4
Employees, Contractor's
3.3.2, 3.4.3, 3.8.1, 3.9, 3.18.2, 4.2.3, 4.2.6, 10.2, 10.3.3, 11.1.1, 11.3.7, 14.1, 14.2.1.1
Equipment, Labor, Materials or
1.1.3, 1.1.6, 3.4, 3.5, 3.8.2, 3.8.3, 3.12, 3.13, 3.15.1, 4.2.6, 4.2.7, 5.2.1, 6.2.1, 7.3.7, 9.3.2, 9.3.3, 9.5.1.3, 9.10.2, 10.2.1, 10.2.4, 14.2.1.1, 14.2.1.2
Execution and Progress of the Work
1.1.3, 1.2.1, 1.2.2, 2.2.3, 2.2.5, 3.1, 3.3.1, 3.4.1, 3.5, 3.7.1, 3.10.1, 3.12, 3.14, 4.2, 6.2.2, 7.1.3, 7.3.5, 8.2, 9.5.1, 9.9.1, 10.2, 10.3, 12.2, 14.2, 14.3.1, 15.1.3

AIA Document A201™ – 2007. Copyright © 1911, 1915, 1918, 1925, 1937, 1951, 1958, 1961, 1963, 1966, 1970, 1976, 1987, 1997 and 2007 by The American Institute of Architects. All rights reserved. **WARNING:** This AIA® Document is protected by U.S. Copyright Law and International Treaties. Unauthorized reproduction or distribution of this AIA® Document, or any portion of it, may result in severe civil and criminal penalties, and will be prosecuted to the maximum extent possible under the law. This draft was produced by AIA software at 13:27:21 on 10/31/2013 under Order No.4888000083_1 which expires on 02/17/2014, and is not for resale.
User Notes: (1198933826)

Extensions of Time
3.2.4, 3.7.4, 5.2.3, 7.2.1, 7.3, 7.4, 9.5.1, 9.7, 10.3.2, 10.4, 14.3, 15.1.5, 15.2.5
Failure of Payment
9.5.1.3, **9.7**, 9.10.2, 13.6, 14.1.1.3, 14.2.1.2
Faulty Work
(See Defective or Nonconforming Work)
Final Completion and Final Payment
4.2.1, 4.2.9, 9.8.2, **9.10**, 11.1.2, 11.1.3, 11.3.1, 11.3.5, 12.3, 14.2.4, 14.4.3
Financial Arrangements, Owner's
2.2.1, 13.2.2, 14.1.1.4
Fire and Extended Coverage Insurance
11.3.1.1
GENERAL PROVISIONS
1
Governing Law
13.1
Guarantees (See Warranty)
Hazardous Materials
10.2.4, **10.3**
Identification of Subcontractors and Suppliers
5.2.1
Indemnification
3.17, **3.18**, 9.10.2, 10.3.3, 10.3.5, 10.3.6, 11.3.1.2, 11.3.7
Information and Services Required of the Owner
2.1.2, **2.2**, 3.2.2, 3.12.4, 3.12.10, 6.1.3, 6.1.4, 6.2.5, 9.6.1, 9.6.4, 9.9.2, 9.10.3, 10.3.3, 11.2, 11.4, 13.5.1, 13.5.2, 14.1.1.4, 14.1.4, 15.1.3
Initial Decision
15.2
Initial Decision Maker, Definition of
1.1.8
Initial Decision Maker, Decisions
14.2.2, 14.2.4, 15.2.1, 15.2.2, 15.2.3, 15.2.4, 15.2.5
Initial Decision Maker, Extent of Authority
14.2.2, 14.2.4, 15.1.3, 15.2.1, 15.2.2, 15.2.3, 15.2.4, 15.2.5
Injury or Damage to Person or Property
10.2.8, 10.4
Inspections
3.1.3, 3.3.3, 3.7.1, 4.2.2, 4.2.6, 4.2.9, 9.4.2, 9.8.3, 9.9.2, 9.10.1, 12.2.1, 13.5
Instructions to Bidders
1.1.1
Instructions to the Contractor
3.2.4, 3.3.1, 3.8.1, 5.2.1, 7, 8.2.2, 12, 13.5.2
Instruments of Service, Definition of
1.1.7
Insurance
3.18.1, 6.1.1, 7.3.7, 9.3.2, 9.8.4, 9.9.1, 9.10.2, **11**
Insurance, Boiler and Machinery
11.3.2
Insurance, Contractor's Liability
11.1
Insurance, Effective Date of
8.2.2, 11.1.2
Insurance, Loss of Use
11.3.3
Insurance, Owner's Liability
11.2
Insurance, Property
10.2.5, **11.3**
Insurance, Stored Materials
9.3.2
INSURANCE AND BONDS
11
Insurance Companies, Consent to Partial Occupancy
9.9.1
Intent of the Contract Documents
1.2.1, 4.2.7, 4.2.12, 4.2.13, 7.4
Interest
13.6
Interpretation
1.2.3, **1.4**, 4.1.1, 5.1, 6.1.2, 15.1.1
Interpretations, Written
4.2.11, 4.2.12, 15.1.4
Judgment on Final Award
15.4.2
Labor and Materials, Equipment
1.1.3, 1.1.6, **3.4**, 3.5, 3.8.2, 3.8.3, 3.12, 3.13, 3.15.1, 4.2.6, 4.2.7, 5.2.1, 6.2.1, 7.3.7, 9.3.2, 9.3.3, 9.5.1.3, 9.10.2, 10.2.1, 10.2.4, 14.2.1.1, 14.2.1.2
Labor Disputes
8.3.1
Laws and Regulations
1.5, 3.2.3, 3.6, 3.7, 3.12.10, 3.13, 4.1.1, 9.6.4, 9.9.1, 10.2.2, 11.1.1, 11.3, 13.1, 13.4, 13.5.1, 13.5.2, 13.6, 14, 15.2.8, 15.4
Liens
2.1.2, 9.3.3, 9.10.2, 9.10.4, 15.2.8
Limitations, Statutes of
12.2.5, 13.7, 15.4.1.1
Limitations of Liability
2.3, 3.2.2, 3.5, 3.12.10, 3.17, 3.18.1, 4.2.6, 4.2.7, 4.2.12, 6.2.2, 9.4.2, 9.6.4, 9.6.7, 10.2.5, 10.3.3, 11.1.2, 11.2, 11.3.7, 12.2.5, 13.4.2
Limitations of Time
2.1.2, 2.2, 2.4, 3.2.2, 3.10, 3.11, 3.12.5, 3.15.1, 4.2.7, 5.2, 5.3, 5.4.1, 6.2.4, 7.3, 7.4, 8.2, 9.2, 9.3.1, 9.3.3, 9.4.1, 9.5, 9.6, 9.7, 9.8, 9.9, 9.10, 11.1.3, 11.3.1.5, 11.3.6, 11.3.10, 12.2, 13.5, 13.7, 14, 15
Loss of Use Insurance
11.3.3
Material Suppliers
1.5, 3.12.1, 4.2.4, 4.2.6, 5.2.1, 9.3, 9.4.2, 9.6, 9.10.5
Materials, Hazardous
10.2.4, **10.3**
Materials, Labor, Equipment and
1.1.3, 1.1.6, 1.5.1, 3.4.1, 3.5, 3.8.2, 3.8.3, 3.12, 3.13, 3.15.1, 4.2.6, 4.2.7, 5.2.1, 6.2.1, 7.3.7, 9.3.2, 9.3.3, 9.5.1.3, 9.10.2, 10.2.1.2, 10.2.4, 14.2.1.1, 14.2.1.2
Means, Methods, Techniques, Sequences and Procedures of Construction
3.3.1, 3.12.10, 4.2.2, 4.2.7, 9.4.2

AIA Document A201™ – 2007. Copyright © 1911, 1915, 1918, 1925, 1937, 1951, 1958, 1961, 1963, 1966, 1970, 1976, 1987, 1997 and 2007 by The American Institute of Architects. All rights reserved. **WARNING:** This AIA® Document is protected by U.S. Copyright Law and International Treaties. Unauthorized reproduction or distribution of this AIA® Document, or any portion of it, may result in severe civil and criminal penalties, and will be prosecuted to the maximum extent possible under the law. This draft was produced by AIA software at 13:27:21 on 10/31/2013 under Order No.4888000083_1 which expires on 02/17/2014, and is not for resale.
User Notes: (1198933826)

Mechanic's Lien
2.1.2, 15.2.8
Mediation
8.3.1, 10.3.5, 10.3.6, 15.2.1, 15.2.5, 15.2.6, **15.3**, 15.4.1
Minor Changes in the Work
1.1.1, 3.12.8, 4.2.8, 7.1, **7.4**
MISCELLANEOUS PROVISIONS
13
Modifications, Definition of
1.1.1
Modifications to the Contract
1.1.1, 1.1.2, 3.11, 4.1.2, 4.2.1, 5.2.3, 7, 8.3.1, 9.7, 10.3.2, 11.3.1
Mutual Responsibility
6.2
Nonconforming Work, Acceptance of
9.6.6, 9.9.3, **12.3**
Nonconforming Work, Rejection and Correction of
2.3, 2.4, 3.5, 4.2.6, 6.2.4, 9.5.1, 9.8.2, 9.9.3, 9.10.4, 12.2.1
Notice
2.2.1, 2.3, 2.4, 3.2.4, 3.3.1, 3.7.2, 3.12.9, 5.2.1, 9.7, 9.10, 10.2.2, 11.1.3, 12.2.2.1, 13.3, 13.5.1, 13.5.2, 14.1, 14.2, 15.2.8, 15.4.1
Notice, Written
2.3, 2.4, 3.3.1, 3.9.2, 3.12.9, 3.12.10, 5.2.1, 9.7, 9.10, 10.2.2, 10.3, 11.1.3, 11.3.6, 12.2.2.1, **13.3**, 14, 15.2.8, 15.4.1
Notice of Claims
3.7.4, 10.2.8, **15.1.2**, 15.4
Notice of Testing and Inspections
13.5.1, 13.5.2
Observations, Contractor's
3.2, 3.7.4
Occupancy
2.2.2, 9.6.6, 9.8, 11.3.1.5
Orders, Written
1.1.1, 2.3, 3.9.2, 7, 8.2.2, 11.3.9, 12.1, 12.2.2.1, 13.5.2, 14.3.1
OWNER
2
Owner, Definition of
2.1.1
Owner, Information and Services Required of the
2.1.2, **2.2**, 3.2.2, 3.12.10, 6.1.3, 6.1.4, 6.2.5, 9.3.2, 9.6.1, 9.6.4, 9.9.2, 9.10.3, 10.3.3, 11.2, 11.3, 13.5.1, 13.5.2, 14.1.1.4, 14.1.4, 15.1.3
Owner's Authority
1.5, 2.1.1, 2.3, 2.4, 3.4.2, 3.8.1, 3.12.10, 3.14.2, 4.1.2, 4.1.3, 4.2.4, 4.2.9, 5.2.1, 5.2.4, 5.4.1, 6.1, 6.3, 7.2.1, 7.3.1, 8.2.2, 8.3.1, 9.3.1, 9.3.2, 9.5.1, 9.6.4, 9.9.1, 9.10.2, 10.3.2, 11.1.3, 11.3.3, 11.3.10, 12.2.2, 12.3, 13.2.2, 14.3, 14.4, 15.2.7
Owner's Financial Capability
2.2.1, 13.2.2, 14.1.1.4
Owner's Liability Insurance
11.2
Owner's Relationship with Subcontractors
1.1.2, 5.2, 5.3, 5.4, 9.6.4, 9.10.2, 14.2.2
Owner's Right to Carry Out the Work
2.4, 14.2.2
Owner's Right to Clean Up
6.3
Owner's Right to Perform Construction and to Award Separate Contracts
6.1
Owner's Right to Stop the Work
2.3
Owner's Right to Suspend the Work
14.3
Owner's Right to Terminate the Contract
14.2
Ownership and Use of Drawings, Specifications and Other Instruments of Service
1.1.1, 1.1.6, 1.1.7, **1.5**, 2.2.5, 3.2.2, 3.11, 3.17, 4.2.12, 5.3
Partial Occupancy or Use
9.6.6, **9.9**, 11.3.1.5
Patching, Cutting and
3.14, 6.2.5
Patents
3.17
Payment, Applications for
4.2.5, 7.3.9, 9.2, **9.3**, 9.4, 9.5, 9.6.3, 9.7, 9.8.5, 9.10.1, 14.2.3, 14.2.4, 14.4.3
Payment, Certificates for
4.2.5, 4.2.9, 9.3.3, **9.4**, 9.5, 9.6.1, 9.6.6, 9.7, 9.10.1, 9.10.3, 13.7, 14.1.1.3, 14.2.4
Payment, Failure of
9.5.1.3, **9.7**, 9.10.2, 13.6, 14.1.1.3, 14.2.1.2
Payment, Final
4.2.1, 4.2.9, 9.8.2, 9.10, 11.1.2, 11.1.3, 11.4.1, 12.3, 13.7, 14.2.4, 14.4.3
Payment Bond, Performance Bond and
7.3.7.4, 9.6.7, 9.10.3, **11.4**
Payments, Progress
9.3, **9.6**, 9.8.5, 9.10.3, 13.6, 14.2.3, 15.1.3
PAYMENTS AND COMPLETION
9
Payments to Subcontractors
5.4.2, 9.5.1.3, 9.6.2, 9.6.3, 9.6.4, 9.6.7, 14.2.1.2
PCB
10.3.1
Performance Bond and Payment Bond
7.3.7.4, 9.6.7, 9.10.3, **11.4**
Permits, Fees, Notices and Compliance with Laws
2.2.2, **3.7**, 3.13, 7.3.7.4, 10.2.2
PERSONS AND PROPERTY, PROTECTION OF
10
Polychlorinated Biphenyl
10.3.1
Product Data, Definition of
3.12.2

AIA Document A201™ – 2007. Copyright © 1911, 1915, 1918, 1925, 1937, 1951, 1958, 1961, 1963, 1966, 1970, 1976, 1987, 1997 and 2007 by The American Institute of Architects. All rights reserved. **WARNING:** This AIA® Document is protected by U.S. Copyright Law and International Treaties. Unauthorized reproduction or distribution of this AIA® Document, or any portion of it, may result in severe civil and criminal penalties, and will be prosecuted to the maximum extent possible under the law. This draft was produced by AIA software at 13:27:21 on 10/31/2013 under Order No.4888000083_1 which expires on 02/17/2014, and is not for resale.
User Notes: (1198933826)

Product Data and Samples, Shop Drawings
3.11, **3.12**, 4.2.7
Progress and Completion
4.2.2, **8.2**, 9.8, 9.9.1, 14.1.4, 15.1.3
Progress Payments
9.3, **9.6**, 9.8.5, 9.10.3, 13.6, 14.2.3, 15.1.3
Project, Definition of
1.1.4
Project Representatives
4.2.10
Property Insurance
10.2.5, **11.3**
PROTECTION OF PERSONS AND PROPERTY
10
Regulations and Laws
1.5, 3.2.3, 3.6, 3.7, 3.12.10, 3.13, 4.1.1, 9.6.4, 9.9.1, 10.2.2, 11.1, 11.4, 13.1, 13.4, 13.5.1, 13.5.2, 13.6, 14, 15.2.8, 15.4
Rejection of Work
3.5, 4.2.6, 12.2.1
Releases and Waivers of Liens
9.10.2
Representations
3.2.1, 3.5, 3.12.6, 6.2.2, 8.2.1, 9.3.3, 9.4.2, 9.5.1, 9.8.2, 9.10.1
Representatives
2.1.1, 3.1.1, 3.9, 4.1.1, 4.2.1, 4.2.2, 4.2.10, 5.1.1, 5.1.2, 13.2.1
Responsibility for Those Performing the Work
3.3.2, 3.18, 4.2.3, 5.3, 6.1.3, 6.2, 6.3, 9.5.1, 10
Retainage
9.3.1, 9.6.2, 9.8.5, 9.9.1, 9.10.2, 9.10.3
Review of Contract Documents and Field Conditions by Contractor
3.2, 3.12.7, 6.1.3
Review of Contractor's Submittals by Owner and Architect
3.10.1, 3.10.2, 3.11, 3.12, 4.2, 5.2, 6.1.3, 9.2, 9.8.2
Review of Shop Drawings, Product Data and Samples by Contractor
3.12
Rights and Remedies
1.1.2, 2.3, 2.4, 3.5, 3.7.4, 3.15.2, 4.2.6, 5.3, 5.4, 6.1, 6.3, 7.3.1, 8.3, 9.5.1, 9.7, 10.2.5, 10.3, 12.2.2, 12.2.4, **13.4**, 14, 15.4
Royalties, Patents and Copyrights
3.17
Rules and Notices for Arbitration
15.4.1
Safety of Persons and Property
10.2, 10.4
Safety Precautions and Programs
3.3.1, 4.2.2, 4.2.7, 5.3, **10.1**, 10.2, 10.4
Samples, Definition of
3.12.3
Samples, Shop Drawings, Product Data and
3.11, **3.12**, 4.2.7
Samples at the Site, Documents and
3.11
Schedule of Values
9.2, 9.3.1
Schedules, Construction
3.10, 3.12.1, 3.12.2, 6.1.3, 15.1.5.2
Separate Contracts and Contractors
1.1.4, 3.12.5, 3.14.2, 4.2.4, 4.2.7, 6, 8.3.1, 12.1.2
Shop Drawings, Definition of
3.12.1
Shop Drawings, Product Data and Samples
3.11, **3.12**, 4.2.7
Site, Use of
3.13, 6.1.1, 6.2.1
Site Inspections
3.2.2, 3.3.3, 3.7.1, 3.7.4, 4.2, 9.4.2, 9.10.1, 13.5
Site Visits, Architect's
3.7.4, 4.2.2, 4.2.9, 9.4.2, 9.5.1, 9.9.2, 9.10.1, 13.5
Special Inspections and Testing
4.2.6, 12.2.1, 13.5
Specifications, Definition of
1.1.6
Specifications
1.1.1, **1.1.6**, 1.2.2, 1.5, 3.11, 3.12.10, 3.17, 4.2.14
Statute of Limitations
13.7, 15.4.1.1
Stopping the Work
2.3, 9.7, 10.3, 14.1
Stored Materials
6.2.1, 9.3.2, 10.2.1.2, 10.2.4
Subcontractor, Definition of
5.1.1
SUBCONTRACTORS
5
Subcontractors, Work by
1.2.2, 3.3.2, 3.12.1, 4.2.3, 5.2.3, 5.3, 5.4, 9.3.1.2, 9.6.7
Subcontractual Relations
5.3, 5.4, 9.3.1.2, 9.6, 9.10, 10.2.1, 14.1, 14.2.1
Submittals
3.10, 3.11, 3.12, 4.2.7, 5.2.1, 5.2.3, 7.3.7, 9.2, 9.3, 9.8, 9.9.1, 9.10.2, 9.10.3, 11.1.3
Submittal Schedule
3.10.2, 3.12.5, 4.2.7
Subrogation, Waivers of
6.1.1, **11.3.7**
Substantial Completion
4.2.9, 8.1.1, 8.1.3, 8.2.3, 9.4.2, **9.8**, 9.9.1, 9.10.3, 12.2, 13.7
Substantial Completion, Definition of
9.8.1
Substitution of Subcontractors
5.2.3, 5.2.4
Substitution of Architect
4.1.3
Substitutions of Materials
3.4.2, 3.5, 7.3.8

AIA Document A201™ – 2007. Copyright © 1911, 1915, 1918, 1925, 1937, 1951, 1958, 1961, 1963, 1966, 1970, 1976, 1987, 1997 and 2007 by The American Institute of Architects. All rights reserved. **WARNING:** This AIA® Document is protected by U.S. Copyright Law and International Treaties. Unauthorized reproduction or distribution of this AIA® Document, or any portion of it, may result in severe civil and criminal penalties, and will be prosecuted to the maximum extent possible under the law. This draft was produced by AIA software at 13:27:21 on 10/31/2013 under Order No.4888000083_1 which expires on 02/17/2014, and is not for resale.
User Notes: (1198933826)

Sub-subcontractor, Definition of
5.1.2
Subsurface Conditions
3.7.4
Successors and Assigns
13.2
Superintendent
3.9, 10.2.6
Supervision and Construction Procedures
1.2.2, **3.3**, 3.4, 3.12.10, 4.2.2, 4.2.7, 6.1.3, 6.2.4, 7.1.3, 7.3.7, 8.2, 8.3.1, 9.4.2, 10, 12, 14, 15.1.3
Surety
5.4.1.2, 9.8.5, 9.10.2, 9.10.3, 14.2.2, 15.2.7
Surety, Consent of
9.10.2, 9.10.3
Surveys
2.2.3
Suspension by the Owner for Convenience
14.3
Suspension of the Work
5.4.2, 14.3
Suspension or Termination of the Contract
5.4.1.1, 14
Taxes
3.6, 3.8.2.1, 7.3.7.4
Termination by the Contractor
14.1, 15.1.6
Termination by the Owner for Cause
5.4.1.1, **14.2,** 15.1.6
Termination by the Owner for Convenience
14.4
Termination of the Architect
4.1.3
Termination of the Contractor
14.2.2
TERMINATION OR SUSPENSION OF THE CONTRACT
14
Tests and Inspections
3.1.3, 3.3.3, 4.2.2, 4.2.6, 4.2.9, 9.4.2, 9.8.3, 9.9.2, 9.10.1, 10.3.2, 11.4.1, 12.2.1, **13.5**
TIME
8
Time, Delays and Extensions of
3.2.4, 3.7.4, 5.2.3, 7.2.1, 7.3.1, 7.4, **8.3**, 9.5.1, 9.7, 10.3.2, 10.4, 14.3.2, 15.1.5, 15.2.5
Time Limits
2.1.2, 2.2, 2.4, 3.2.2, 3.10, 3.11, 3.12.5, 3.15.1, 4.2, 5.2, 5.3, 5.4, 6.2.4, 7.3, 7.4, 8.2, 9.2, 9.3.1, 9.3.3, 9.4.1, 9.5, 9.6, 9.7, 9.8, 9.9, 9.10, 11.1.3, 12.2, 13.5, 13.7, 14, 15.1.2, 15.4
Time Limits on Claims
3.7.4, 10.2.8, **13.7**, 15.1.2
Title to Work
9.3.2, 9.3.3
Transmission of Data in Digital Form
1.6
UNCOVERING AND CORRECTION OF WORK
12
Uncovering of Work
12.1
Unforeseen Conditions, Concealed or Unknown
3.7.4, 8.3.1, 10.3
Unit Prices
7.3.3.2, 7.3.4
Use of Documents
1.1.1, 1.5, 2.2.5, 3.12.6, 5.3
Use of Site
3.13, 6.1.1, 6.2.1
Values, Schedule of
9.2, 9.3.1
Waiver of Claims by the Architect
13.4.2
Waiver of Claims by the Contractor
9.10.5, 13.4.2, 15.1.6
Waiver of Claims by the Owner
9.9.3, 9.10.3, 9.10.4, 12.2.2.1, 13.4.2, 14.2.4, 15.1.6
Waiver of Consequential Damages
14.2.4, 15.1.6
Waiver of Liens
9.10.2, 9.10.4
Waivers of Subrogation
6.1.1, **11.3.7**
Warranty
3.5, 4.2.9, 9.3.3, 9.8.4, 9.9.1, 9.10.4, 12.2.2, 13.7
Weather Delays
15.1.5.2
Work, Definition of
1.1.3
Written Consent
1.5.2, 3.4.2, 3.7.4, 3.12.8, 3.14.2, 4.1.2, 9.3.2, 9.8.5, 9.9.1, 9.10.2, 9.10.3, 11.4.1, 13.2, 13.4.2, 15.4.4.2
Written Interpretations
4.2.11, 4.2.12
Written Notice
2.3, 2.4, 3.3.1, 3.9, 3.12.9, 3.12.10, 5.2.1, 8.2.2, 9.7, 9.10, 10.2.2, 10.3, 11.1.3, 12.2.2, 12.2.4, **13.3**, 14, 15.4.1
Written Orders
1.1.1, 2.3, 3.9, 7, 8.2.2, 12.1, 12.2, 13.5.2, 14.3.1, 15.1.2

AIA Document A201™ – 2007. Copyright © 1911, 1915, 1918, 1925, 1937, 1951, 1958, 1961, 1963, 1966, 1970, 1976, 1987, 1997 and 2007 by The American Institute of Architects. All rights reserved. **WARNING:** This AIA® Document is protected by U.S. Copyright Law and International Treaties. Unauthorized reproduction or distribution of this AIA® Document, or any portion of it, may result in severe civil and criminal penalties, and will be prosecuted to the maximum extent possible under the law. This draft was produced by AIA software at 13:27:21 on 10/31/2013 under Order No.4888000083_1 which expires on 02/17/2014, and is not for resale.
User Notes: (1198933826)

ARTICLE 1 GENERAL PROVISIONS

§ 1.1 BASIC DEFINITIONS

§ 1.1.1 THE CONTRACT DOCUMENTS

The Contract Documents are enumerated in the Agreement between the Owner and Contractor (hereinafter the Agreement) and consist of the Agreement, Conditions of the Contract (General, Supplementary and other Conditions), Drawings, Specifications, Addenda issued prior to execution of the Contract, other documents listed in the Agreement and Modifications issued after execution of the Contract. A Modification is (1) a written amendment to the Contract signed by both parties, (2) a Change Order, (3) a Construction Change Directive or (4) a written order for a minor change in the Work issued by the Architect. Unless specifically enumerated in the Agreement, the Contract Documents do not include the advertisement or invitation to bid, Instructions to Bidders, sample forms, other information furnished by the Owner in anticipation of receiving bids or proposals, the Contractor's bid or proposal, or portions of Addenda relating to bidding requirements.

§ 1.1.2 THE CONTRACT

The Contract Documents form the Contract for Construction. The Contract represents the entire and integrated agreement between the parties hereto and supersedes prior negotiations, representations or agreements, either written or oral. The Contract may be amended or modified only by a Modification. The Contract Documents shall not be construed to create a contractual relationship of any kind (1) between the Contractor and the Architect or the Architect's consultants, (2) between the Owner and a Subcontractor or a Sub-subcontractor, (3) between the Owner and the Architect or the Architect's consultants or (4) between any persons or entities other than the Owner and the Contractor. The Architect shall, however, be entitled to performance and enforcement of obligations under the Contract intended to facilitate performance of the Architect's duties.

§ 1.1.3 THE WORK

The term "Work" means the construction and services required by the Contract Documents, whether completed or partially completed, and includes all other labor, materials, equipment and services provided or to be provided by the Contractor to fulfill the Contractor's obligations. The Work may constitute the whole or a part of the Project.

§ 1.1.4 THE PROJECT

The Project is the total construction of which the Work performed under the Contract Documents may be the whole or a part and which may include construction by the Owner and by separate contractors.

§ 1.1.5 THE DRAWINGS

The Drawings are the graphic and pictorial portions of the Contract Documents showing the design, location and dimensions of the Work, generally including plans, elevations, sections, details, schedules and diagrams.

§ 1.1.6 THE SPECIFICATIONS

The Specifications are that portion of the Contract Documents consisting of the written requirements for materials, equipment, systems, standards and workmanship for the Work, and performance of related services.

§ 1.1.7 INSTRUMENTS OF SERVICE

Instruments of Service are representations, in any medium of expression now known or later developed, of the tangible and intangible creative work performed by the Architect and the Architect's consultants under their respective professional services agreements. Instruments of Service may include, without limitation, studies, surveys, models, sketches, drawings, specifications, and other similar materials.

§ 1.1.8 INITIAL DECISION MAKER

The Initial Decision Maker is the person identified in the Agreement to render initial decisions on Claims in accordance with Section 15.2 and certify termination of the Agreement under Section 14.2.2.

§ 1.2 CORRELATION AND INTENT OF THE CONTRACT DOCUMENTS

§ 1.2.1 The intent of the Contract Documents is to include all items necessary for the proper execution and completion of the Work by the Contractor. The Contract Documents are complementary, and what is required by one shall be as binding as if required by all; performance by the Contractor shall be required only to the extent consistent with the Contract Documents and reasonably inferable from them as being necessary to produce the indicated results.

AIA Document A201™ – 2007. Copyright © 1911, 1915, 1918, 1925, 1937, 1951, 1958, 1961, 1963, 1966, 1970, 1976, 1987, 1997 and 2007 by The American Institute of Architects. All rights reserved. **WARNING:** This AIA® Document is protected by U.S. Copyright Law and International Treaties. Unauthorized reproduction or distribution of this AIA® Document, or any portion of it, may result in severe civil and criminal penalties, and will be prosecuted to the maximum extent possible under the law. This draft was produced by AIA software at 13:27:21 on 10/31/2013 under Order No.4888000083_1 which expires on 02/17/2014, and is not for resale. User Notes: (1198933826)

§ 1.2.2 Organization of the Specifications into divisions, sections and articles, and arrangement of Drawings shall not control the Contractor in dividing the Work among Subcontractors or in establishing the extent of Work to be performed by any trade.

§ 1.2.3 Unless otherwise stated in the Contract Documents, words that have well-known technical or construction industry meanings are used in the Contract Documents in accordance with such recognized meanings.

§ 1.3 CAPITALIZATION

Terms capitalized in these General Conditions include those that are (1) specifically defined, (2) the titles of numbered articles or (3) the titles of other documents published by the American Institute of Architects.

§ 1.4 INTERPRETATION

In the interest of brevity the Contract Documents frequently omit modifying words such as "all" and "any" and articles such as "the" and "an," but the fact that a modifier or an article is absent from one statement and appears in another is not intended to affect the interpretation of either statement.

§ 1.5 OWNERSHIP AND USE OF DRAWINGS, SPECIFICATIONS AND OTHER INSTRUMENTS OF SERVICE

§ 1.5.1 The Architect and the Architect's consultants shall be deemed the authors and owners of their respective Instruments of Service, including the Drawings and Specifications, and will retain all common law, statutory and other reserved rights, including copyrights. The Contractor, Subcontractors, Sub-subcontractors, and material or equipment suppliers shall not own or claim a copyright in the Instruments of Service. Submittal or distribution to meet official regulatory requirements or for other purposes in connection with this Project is not to be construed as publication in derogation of the Architect's or Architect's consultants' reserved rights.

§ 1.5.2 The Contractor, Subcontractors, Sub-subcontractors and material or equipment suppliers are authorized to use and reproduce the Instruments of Service provided to them solely and exclusively for execution of the Work. All copies made under this authorization shall bear the copyright notice, if any, shown on the Instruments of Service. The Contractor, Subcontractors, Sub-subcontractors, and material or equipment suppliers may not use the Instruments of Service on other projects or for additions to this Project outside the scope of the Work without the specific written consent of the Owner, Architect and the Architect's consultants.

§ 1.6 TRANSMISSION OF DATA IN DIGITAL FORM

If the parties intend to transmit Instruments of Service or any other information or documentation in digital form, they shall endeavor to establish necessary protocols governing such transmissions, unless otherwise already provided in the Agreement or the Contract Documents.

ARTICLE 2 OWNER

§ 2.1 GENERAL

§ 2.1.1 The Owner is the person or entity identified as such in the Agreement and is referred to throughout the Contract Documents as if singular in number. The Owner shall designate in writing a representative who shall have express authority to bind the Owner with respect to all matters requiring the Owner's approval or authorization. Except as otherwise provided in Section 4.2.1, the Architect does not have such authority. The term "Owner" means the Owner or the Owner's authorized representative.

§ 2.1.2 The Owner shall furnish to the Contractor within fifteen days after receipt of a written request, information necessary and relevant for the Contractor to evaluate, give notice of or enforce mechanic's lien rights. Such information shall include a correct statement of the record legal title to the property on which the Project is located, usually referred to as the site, and the Owner's interest therein.

§ 2.2 INFORMATION AND SERVICES REQUIRED OF THE OWNER

§ 2.2.1 Prior to commencement of the Work, the Contractor may request in writing that the Owner provide reasonable evidence that the Owner has made financial arrangements to fulfill the Owner's obligations under the Contract. Thereafter, the Contractor may only request such evidence if (1) the Owner fails to make payments to the Contractor as the Contract Documents require; (2) a change in the Work materially changes the Contract Sum; or (3) the Contractor identifies in writing a reasonable concern regarding the Owner's ability to make payment when due. The Owner shall furnish such evidence as a condition precedent to commencement or continuation of the Work or the portion of the Work affected by a material change. After the Owner furnishes the evidence, the Owner shall not materially vary such financial arrangements without prior notice to the Contractor.

AIA Document A201™ – 2007. Copyright © 1911, 1915, 1918, 1925, 1937, 1951, 1958, 1961, 1963, 1966, 1970, 1976, 1987, 1997 and 2007 by The American Institute of Architects. All rights reserved. **WARNING:** This AIA® Document is protected by U.S. Copyright Law and International Treaties. Unauthorized reproduction or distribution of this AIA® Document, or any portion of it, may result in severe civil and criminal penalties, and will be prosecuted to the maximum extent possible under the law. This draft was produced by AIA software at 13:27:21 on 10/31/2013 under Order No.4888000083_1 which expires on 02/17/2014, and is not for resale. User Notes: (1198933826)

§ 2.2.2 Except for permits and fees that are the responsibility of the Contractor under the Contract Documents, including those required under Section 3.7.1, the Owner shall secure and pay for necessary approvals, easements, assessments and charges required for construction, use or occupancy of permanent structures or for permanent changes in existing facilities.

§ 2.2.3 The Owner shall furnish surveys describing physical characteristics, legal limitations and utility locations for the site of the Project, and a legal description of the site. The Contractor shall be entitled to rely on the accuracy of information furnished by the Owner but shall exercise proper precautions relating to the safe performance of the Work.

§ 2.2.4 The Owner shall furnish information or services required of the Owner by the Contract Documents with reasonable promptness. The Owner shall also furnish any other information or services under the Owner's control and relevant to the Contractor's performance of the Work with reasonable promptness after receiving the Contractor's written request for such information or services.

§ 2.2.5 Unless otherwise provided in the Contract Documents, the Owner shall furnish to the Contractor one copy of the Contract Documents for purposes of making reproductions pursuant to Section 1.5.2.

§ 2.3 OWNER'S RIGHT TO STOP THE WORK

If the Contractor fails to correct Work that is not in accordance with the requirements of the Contract Documents as required by Section 12.2 or repeatedly fails to carry out Work in accordance with the Contract Documents, the Owner may issue a written order to the Contractor to stop the Work, or any portion thereof, until the cause for such order has been eliminated; however, the right of the Owner to stop the Work shall not give rise to a duty on the part of the Owner to exercise this right for the benefit of the Contractor or any other person or entity, except to the extent required by Section 6.1.3.

§ 2.4 OWNER'S RIGHT TO CARRY OUT THE WORK

If the Contractor defaults or neglects to carry out the Work in accordance with the Contract Documents and fails within a ten-day period after receipt of written notice from the Owner to commence and continue correction of such default or neglect with diligence and promptness, the Owner may, without prejudice to other remedies the Owner may have, correct such deficiencies. In such case an appropriate Change Order shall be issued deducting from payments then or thereafter due the Contractor the reasonable cost of correcting such deficiencies, including Owner's expenses and compensation for the Architect's additional services made necessary by such default, neglect or failure. Such action by the Owner and amounts charged to the Contractor are both subject to prior approval of the Architect. If payments then or thereafter due the Contractor are not sufficient to cover such amounts, the Contractor shall pay the difference to the Owner.

ARTICLE 3 CONTRACTOR

§ 3.1 GENERAL

§ 3.1.1 The Contractor is the person or entity identified as such in the Agreement and is referred to throughout the Contract Documents as if singular in number. The Contractor shall be lawfully licensed, if required in the jurisdiction where the Project is located. The Contractor shall designate in writing a representative who shall have express authority to bind the Contractor with respect to all matters under this Contract. The term "Contractor" means the Contractor or the Contractor's authorized representative.

§ 3.1.2 The Contractor shall perform the Work in accordance with the Contract Documents.

§ 3.1.3 The Contractor shall not be relieved of obligations to perform the Work in accordance with the Contract Documents either by activities or duties of the Architect in the Architect's administration of the Contract, or by tests, inspections or approvals required or performed by persons or entities other than the Contractor.

§ 3.2 REVIEW OF CONTRACT DOCUMENTS AND FIELD CONDITIONS BY CONTRACTOR

§ 3.2.1 Execution of the Contract by the Contractor is a representation that the Contractor has visited the site, become generally familiar with local conditions under which the Work is to be performed and correlated personal observations with requirements of the Contract Documents.

§ 3.2.2 Because the Contract Documents are complementary, the Contractor shall, before starting each portion of the Work, carefully study and compare the various Contract Documents relative to that portion of the Work, as well as the information furnished by the Owner pursuant to Section 2.2.3, shall take field measurements of any existing conditions related to that portion of the Work, and shall observe any conditions at the site affecting it. These

AIA Document A201™ – 2007. Copyright © 1911, 1915, 1918, 1925, 1937, 1951, 1958, 1961, 1963, 1966, 1970, 1976, 1987, 1997 and 2007 by The American Institute of Architects. All rights reserved. **WARNING:** This AIA® Document is protected by U.S. Copyright Law and International Treaties. Unauthorized reproduction or distribution of this AIA® Document, or any portion of it, may result in severe civil and criminal penalties, and will be prosecuted to the maximum extent possible under the law. This draft was produced by AIA software at 13:27:21 on 10/31/2013 under Order No.4888000083_1 which expires on 02/17/2014, and is not for resale. User Notes: (1198933826)

obligations are for the purpose of facilitating coordination and construction by the Contractor and are not for the purpose of discovering errors, omissions, or inconsistencies in the Contract Documents; however, the Contractor shall promptly report to the Architect any errors, inconsistencies or omissions discovered by or made known to the Contractor as a request for information in such form as the Architect may require. It is recognized that the Contractor's review is made in the Contractor's capacity as a contractor and not as a licensed design professional, unless otherwise specifically provided in the Contract Documents.

§ 3.2.3 The Contractor is not required to ascertain that the Contract Documents are in accordance with applicable laws, statutes, ordinances, codes, rules and regulations, or lawful orders of public authorities, but the Contractor shall promptly report to the Architect any nonconformity discovered by or made known to the Contractor as a request for information in such form as the Architect may require.

§ 3.2.4 If the Contractor believes that additional cost or time is involved because of clarifications or instructions the Architect issues in response to the Contractor's notices or requests for information pursuant to Sections 3.2.2 or 3.2.3, the Contractor shall make Claims as provided in Article 15. If the Contractor fails to perform the obligations of Sections 3.2.2 or 3.2.3, the Contractor shall pay such costs and damages to the Owner as would have been avoided if the Contractor had performed such obligations. If the Contractor performs those obligations, the Contractor shall not be liable to the Owner or Architect for damages resulting from errors, inconsistencies or omissions in the Contract Documents, for differences between field measurements or conditions and the Contract Documents, or for nonconformities of the Contract Documents to applicable laws, statutes, ordinances, codes, rules and regulations, and lawful orders of public authorities.

§ 3.3 SUPERVISION AND CONSTRUCTION PROCEDURES

§ 3.3.1 The Contractor shall supervise and direct the Work, using the Contractor's best skill and attention. The Contractor shall be solely responsible for, and have control over, construction means, methods, techniques, sequences and procedures and for coordinating all portions of the Work under the Contract, unless the Contract Documents give other specific instructions concerning these matters. If the Contract Documents give specific instructions concerning construction means, methods, techniques, sequences or procedures, the Contractor shall evaluate the jobsite safety thereof and, except as stated below, shall be fully and solely responsible for the jobsite safety of such means, methods, techniques, sequences or procedures. If the Contractor determines that such means, methods, techniques, sequences or procedures may not be safe, the Contractor shall give timely written notice to the Owner and Architect and shall not proceed with that portion of the Work without further written instructions from the Architect. If the Contractor is then instructed to proceed with the required means, methods, techniques, sequences or procedures without acceptance of changes proposed by the Contractor, the Owner shall be solely responsible for any loss or damage arising solely from those Owner-required means, methods, techniques, sequences or procedures.

§ 3.3.2 The Contractor shall be responsible to the Owner for acts and omissions of the Contractor's employees, Subcontractors and their agents and employees, and other persons or entities performing portions of the Work for, or on behalf of, the Contractor or any of its Subcontractors.

§ 3.3.3 The Contractor shall be responsible for inspection of portions of Work already performed to determine that such portions are in proper condition to receive subsequent Work.

§ 3.4 LABOR AND MATERIALS

§ 3.4.1 Unless otherwise provided in the Contract Documents, the Contractor shall provide and pay for labor, materials, equipment, tools, construction equipment and machinery, water, heat, utilities, transportation, and other facilities and services necessary for proper execution and completion of the Work, whether temporary or permanent and whether or not incorporated or to be incorporated in the Work.

§ 3.4.2 Except in the case of minor changes in the Work authorized by the Architect in accordance with Sections 3.12.8 or 7.4, the Contractor may make substitutions only with the consent of the Owner, after evaluation by the Architect and in accordance with a Change Order or Construction Change Directive.

§ 3.4.3 The Contractor shall enforce strict discipline and good order among the Contractor's employees and other persons carrying out the Work. The Contractor shall not permit employment of unfit persons or persons not properly skilled in tasks assigned to them.

AIA Document A201™ – 2007. Copyright © 1911, 1915, 1918, 1925, 1937, 1951, 1958, 1961, 1963, 1966, 1970, 1976, 1987, 1997 and 2007 by The American Institute of Architects. All rights reserved. **WARNING:** This AIA® Document is protected by U.S. Copyright Law and International Treaties. Unauthorized reproduction or distribution of this AIA® Document, or any portion of it, may result in severe civil and criminal penalties, and will be prosecuted to the maximum extent possible under the law. This draft was produced by AIA software at 13:27:21 on 10/31/2013 under Order No.4888000083_1 which expires on 02/17/2014, and is not for resale. User Notes: (1198933826)

§ 3.5 WARRANTY

The Contractor warrants to the Owner and Architect that materials and equipment furnished under the Contract will be of good quality and new unless the Contract Documents require or permit otherwise. The Contractor further warrants that the Work will conform to the requirements of the Contract Documents and will be free from defects, except for those inherent in the quality of the Work the Contract Documents require or permit. Work, materials, or equipment not conforming to these requirements may be considered defective. The Contractor's warranty excludes remedy for damage or defect caused by abuse, alterations to the Work not executed by the Contractor, improper or insufficient maintenance, improper operation, or normal wear and tear and normal usage. If required by the Architect, the Contractor shall furnish satisfactory evidence as to the kind and quality of materials and equipment.

§ 3.6 TAXES

The Contractor shall pay sales, consumer, use and similar taxes for the Work provided by the Contractor that are legally enacted when bids are received or negotiations concluded, whether or not yet effective or merely scheduled to go into effect.

§ 3.7 PERMITS, FEES, NOTICES AND COMPLIANCE WITH LAWS

§ 3.7.1 Unless otherwise provided in the Contract Documents, the Contractor shall secure and pay for the building permit as well as for other permits, fees, licenses, and inspections by government agencies necessary for proper execution and completion of the Work that are customarily secured after execution of the Contract and legally required at the time bids are received or negotiations concluded.

§ 3.7.2 The Contractor shall comply with and give notices required by applicable laws, statutes, ordinances, codes, rules and regulations, and lawful orders of public authorities applicable to performance of the Work.

§ 3.7.3 If the Contractor performs Work knowing it to be contrary to applicable laws, statutes, ordinances, codes, rules and regulations, or lawful orders of public authorities, the Contractor shall assume appropriate responsibility for such Work and shall bear the costs attributable to correction.

§ 3.7.4 Concealed or Unknown Conditions. If the Contractor encounters conditions at the site that are (1) subsurface or otherwise concealed physical conditions that differ materially from those indicated in the Contract Documents or (2) unknown physical conditions of an unusual nature, that differ materially from those ordinarily found to exist and generally recognized as inherent in construction activities of the character provided for in the Contract Documents, the Contractor shall promptly provide notice to the Owner and the Architect before conditions are disturbed and in no event later than 21 days after first observance of the conditions. The Architect will promptly investigate such conditions and, if the Architect determines that they differ materially and cause an increase or decrease in the Contractor's cost of, or time required for, performance of any part of the Work, will recommend an equitable adjustment in the Contract Sum or Contract Time, or both. If the Architect determines that the conditions at the site are not materially different from those indicated in the Contract Documents and that no change in the terms of the Contract is justified, the Architect shall promptly notify the Owner and Contractor in writing, stating the reasons. If either party disputes the Architect's determination or recommendation, that party may proceed as provided in Article 15.

§ 3.7.5 If, in the course of the Work, the Contractor encounters human remains or recognizes the existence of burial markers, archaeological sites or wetlands not indicated in the Contract Documents, the Contractor shall immediately suspend any operations that would affect them and shall notify the Owner and Architect. Upon receipt of such notice, the Owner shall promptly take any action necessary to obtain governmental authorization required to resume the operations. The Contractor shall continue to suspend such operations until otherwise instructed by the Owner but shall continue with all other operations that do not affect those remains or features. Requests for adjustments in the Contract Sum and Contract Time arising from the existence of such remains or features may be made as provided in Article 15.

§ 3.8 ALLOWANCES

§ 3.8.1 The Contractor shall include in the Contract Sum all allowances stated in the Contract Documents. Items covered by allowances shall be supplied for such amounts and by such persons or entities as the Owner may direct, but the Contractor shall not be required to employ persons or entities to whom the Contractor has reasonable objection.

§ 3.8.2 Unless otherwise provided in the Contract Documents,

.1 Allowances shall cover the cost to the Contractor of materials and equipment delivered at the site and all required taxes, less applicable trade discounts;

AIA Document A201™ – 2007. Copyright © 1911, 1915, 1918, 1925, 1937, 1951, 1958, 1961, 1963, 1966, 1970, 1976, 1987, 1997 and 2007 by The American Institute of Architects. All rights reserved. **WARNING:** This AIA® Document is protected by U.S. Copyright Law and International Treaties. Unauthorized reproduction or distribution of this AIA® Document, or any portion of it, may result in severe civil and criminal penalties, and will be prosecuted to the maximum extent possible under the law. This draft was produced by AIA software at 13:27:21 on 10/31/2013 under Order No.4888000083_1 which expires on 02/17/2014, and is not for resale. User Notes: (1198933826)

.2 Contractor's costs for unloading and handling at the site, labor, installation costs, overhead, profit and other expenses contemplated for stated allowance amounts shall be included in the Contract Sum but not in the allowances; and

.3 Whenever costs are more than or less than allowances, the Contract Sum shall be adjusted accordingly by Change Order. The amount of the Change Order shall reflect (1) the difference between actual costs and the allowances under Section 3.8.2.1 and (2) changes in Contractor's costs under Section 3.8.2.2.

§ 3.8.3 Materials and equipment under an allowance shall be selected by the Owner with reasonable promptness.

§ 3.9 SUPERINTENDENT

§ 3.9.1 The Contractor shall employ a competent superintendent and necessary assistants who shall be in attendance at the Project site during performance of the Work. The superintendent shall represent the Contractor, and communications given to the superintendent shall be as binding as if given to the Contractor.

§ 3.9.2 The Contractor, as soon as practicable after award of the Contract, shall furnish in writing to the Owner through the Architect the name and qualifications of a proposed superintendent. The Architect may reply within 14 days to the Contractor in writing stating (1) whether the Owner or the Architect has reasonable objection to the proposed superintendent or (2) that the Architect requires additional time to review. Failure of the Architect to reply within the 14 day period shall constitute notice of no reasonable objection.

§ 3.9.3 The Contractor shall not employ a proposed superintendent to whom the Owner or Architect has made reasonable and timely objection. The Contractor shall not change the superintendent without the Owner's consent, which shall not unreasonably be withheld or delayed.

§ 3.10 CONTRACTOR'S CONSTRUCTION SCHEDULES

§ 3.10.1 The Contractor, promptly after being awarded the Contract, shall prepare and submit for the Owner's and Architect's information a Contractor's construction schedule for the Work. The schedule shall not exceed time limits current under the Contract Documents, shall be revised at appropriate intervals as required by the conditions of the Work and Project, shall be related to the entire Project to the extent required by the Contract Documents, and shall provide for expeditious and practicable execution of the Work.

§ 3.10.2 The Contractor shall prepare a submittal schedule, promptly after being awarded the Contract and thereafter as necessary to maintain a current submittal schedule, and shall submit the schedule(s) for the Architect's approval. The Architect's approval shall not unreasonably be delayed or withheld. The submittal schedule shall (1) be coordinated with the Contractor's construction schedule, and (2) allow the Architect reasonable time to review submittals. If the Contractor fails to submit a submittal schedule, the Contractor shall not be entitled to any increase in Contract Sum or extension of Contract Time based on the time required for review of submittals.

§ 3.10.3 The Contractor shall perform the Work in general accordance with the most recent schedules submitted to the Owner and Architect.

§ 3.11 DOCUMENTS AND SAMPLES AT THE SITE

The Contractor shall maintain at the site for the Owner one copy of the Drawings, Specifications, Addenda, Change Orders and other Modifications, in good order and marked currently to indicate field changes and selections made during construction, and one copy of approved Shop Drawings, Product Data, Samples and similar required submittals. These shall be available to the Architect and shall be delivered to the Architect for submittal to the Owner upon completion of the Work as a record of the Work as constructed.

§ 3.12 SHOP DRAWINGS, PRODUCT DATA AND SAMPLES

§ 3.12.1 Shop Drawings are drawings, diagrams, schedules and other data specially prepared for the Work by the Contractor or a Subcontractor, Sub-subcontractor, manufacturer, supplier or distributor to illustrate some portion of the Work.

§ 3.12.2 Product Data are illustrations, standard schedules, performance charts, instructions, brochures, diagrams and other information furnished by the Contractor to illustrate materials or equipment for some portion of the Work.

§ 3.12.3 Samples are physical examples that illustrate materials, equipment or workmanship and establish standards by which the Work will be judged.

AIA Document A201™ – 2007. Copyright © 1911, 1915, 1918, 1925, 1937, 1951, 1958, 1961, 1963, 1966, 1970, 1976, 1987, 1997 and 2007 by The American Institute of Architects. All rights reserved. **WARNING:** This AIA® Document is protected by U.S. Copyright Law and International Treaties. Unauthorized reproduction or distribution of this AIA® Document, or any portion of it, may result in severe civil and criminal penalties, and will be prosecuted to the maximum extent possible under the law. This draft was produced by AIA software at 13:27:21 on 10/31/2013 under Order No.4888000083_1 which expires on 02/17/2014, and is not for resale. User Notes: (1198933826)

§ 3.12.4 Shop Drawings, Product Data, Samples and similar submittals are not Contract Documents. Their purpose is to demonstrate the way by which the Contractor proposes to conform to the information given and the design concept expressed in the Contract Documents for those portions of the Work for which the Contract Documents require submittals. Review by the Architect is subject to the limitations of Section 4.2.7. Informational submittals upon which the Architect is not expected to take responsive action may be so identified in the Contract Documents. Submittals that are not required by the Contract Documents may be returned by the Architect without action.

§ 3.12.5 The Contractor shall review for compliance with the Contract Documents, approve and submit to the Architect Shop Drawings, Product Data, Samples and similar submittals required by the Contract Documents in accordance with the submittal schedule approved by the Architect or, in the absence of an approved submittal schedule, with reasonable promptness and in such sequence as to cause no delay in the Work or in the activities of the Owner or of separate contractors.

§ 3.12.6 By submitting Shop Drawings, Product Data, Samples and similar submittals, the Contractor represents to the Owner and Architect that the Contractor has (1) reviewed and approved them, (2) determined and verified materials, field measurements and field construction criteria related thereto, or will do so and (3) checked and coordinated the information contained within such submittals with the requirements of the Work and of the Contract Documents.

§ 3.12.7 The Contractor shall perform no portion of the Work for which the Contract Documents require submittal and review of Shop Drawings, Product Data, Samples or similar submittals until the respective submittal has been approved by the Architect.

§ 3.12.8 The Work shall be in accordance with approved submittals except that the Contractor shall not be relieved of responsibility for deviations from requirements of the Contract Documents by the Architect's approval of Shop Drawings, Product Data, Samples or similar submittals unless the Contractor has specifically informed the Architect in writing of such deviation at the time of submittal and (1) the Architect has given written approval to the specific deviation as a minor change in the Work, or (2) a Change Order or Construction Change Directive has been issued authorizing the deviation. The Contractor shall not be relieved of responsibility for errors or omissions in Shop Drawings, Product Data, Samples or similar submittals by the Architect's approval thereof.

§ 3.12.9 The Contractor shall direct specific attention, in writing or on resubmitted Shop Drawings, Product Data, Samples or similar submittals, to revisions other than those requested by the Architect on previous submittals. In the absence of such written notice, the Architect's approval of a resubmission shall not apply to such revisions.

§ 3.12.10 The Contractor shall not be required to provide professional services that constitute the practice of architecture or engineering unless such services are specifically required by the Contract Documents for a portion of the Work or unless the Contractor needs to provide such services in order to carry out the Contractor's responsibilities for construction means, methods, techniques, sequences and procedures. The Contractor shall not be required to provide professional services in violation of applicable law. If professional design services or certifications by a design professional related to systems, materials or equipment are specifically required of the Contractor by the Contract Documents, the Owner and the Architect will specify all performance and design criteria that such services must satisfy. The Contractor shall cause such services or certifications to be provided by a properly licensed design professional, whose signature and seal shall appear on all drawings, calculations, specifications, certifications, Shop Drawings and other submittals prepared by such professional. Shop Drawings and other submittals related to the Work designed or certified by such professional, if prepared by others, shall bear such professional's written approval when submitted to the Architect. The Owner and the Architect shall be entitled to rely upon the adequacy, accuracy and completeness of the services, certifications and approvals performed or provided by such design professionals, provided the Owner and Architect have specified to the Contractor all performance and design criteria that such services must satisfy. Pursuant to this Section 3.12.10, the Architect will review, approve or take other appropriate action on submittals only for the limited purpose of checking for conformance with information given and the design concept expressed in the Contract Documents. The Contractor shall not be responsible for the adequacy of the performance and design criteria specified in the Contract Documents.

§ 3.13 USE OF SITE

The Contractor shall confine operations at the site to areas permitted by applicable laws, statutes, ordinances, codes, rules and regulations, and lawful orders of public authorities and the Contract Documents and shall not unreasonably encumber the site with materials or equipment.

AIA Document A201™ – 2007. Copyright © 1911, 1915, 1918, 1925, 1937, 1951, 1958, 1961, 1963, 1966, 1970, 1976, 1987, 1997 and 2007 by The American Institute of Architects. All rights reserved. **WARNING:** This AIA® Document is protected by U.S. Copyright Law and International Treaties. Unauthorized reproduction or distribution of this AIA® Document, or any portion of it, may result in severe civil and criminal penalties, and will be prosecuted to the maximum extent possible under the law. This draft was produced by AIA software at 13:27:21 on 10/31/2013 under Order No.4888000083_1 which expires on 02/17/2014, and is not for resale. User Notes: (1198933826)

§ 3.14 CUTTING AND PATCHING

§ 3.14.1 The Contractor shall be responsible for cutting, fitting or patching required to complete the Work or to make its parts fit together properly. All areas requiring cutting, fitting and patching shall be restored to the condition existing prior to the cutting, fitting and patching, unless otherwise required by the Contract Documents.

§ 3.14.2 The Contractor shall not damage or endanger a portion of the Work or fully or partially completed construction of the Owner or separate contractors by cutting, patching or otherwise altering such construction, or by excavation. The Contractor shall not cut or otherwise alter such construction by the Owner or a separate contractor except with written consent of the Owner and of such separate contractor; such consent shall not be unreasonably withheld. The Contractor shall not unreasonably withhold from the Owner or a separate contractor the Contractor's consent to cutting or otherwise altering the Work.

§ 3.15 CLEANING UP

§ 3.15.1 The Contractor shall keep the premises and surrounding area free from accumulation of waste materials or rubbish caused by operations under the Contract. At completion of the Work, the Contractor shall remove waste materials, rubbish, the Contractor's tools, construction equipment, machinery and surplus materials from and about the Project.

§ 3.15.2 If the Contractor fails to clean up as provided in the Contract Documents, the Owner may do so and Owner shall be entitled to reimbursement from the Contractor.

§ 3.16 ACCESS TO WORK

The Contractor shall provide the Owner and Architect access to the Work in preparation and progress wherever located.

§ 3.17 ROYALTIES, PATENTS AND COPYRIGHTS

The Contractor shall pay all royalties and license fees. The Contractor shall defend suits or claims for infringement of copyrights and patent rights and shall hold the Owner and Architect harmless from loss on account thereof, but shall not be responsible for such defense or loss when a particular design, process or product of a particular manufacturer or manufacturers is required by the Contract Documents, or where the copyright violations are contained in Drawings, Specifications or other documents prepared by the Owner or Architect. However, if the Contractor has reason to believe that the required design, process or product is an infringement of a copyright or a patent, the Contractor shall be responsible for such loss unless such information is promptly furnished to the Architect.

§ 3.18 INDEMNIFICATION

§ 3.18.1 To the fullest extent permitted by law the Contractor shall indemnify and hold harmless the Owner, Architect, Architect's consultants, and agents and employees of any of them from and against claims, damages, losses and expenses, including but not limited to attorneys' fees, arising out of or resulting from performance of the Work, provided that such claim, damage, loss or expense is attributable to bodily injury, sickness, disease or death, or to injury to or destruction of tangible property (other than the Work itself), but only to the extent caused by the negligent acts or omissions of the Contractor, a Subcontractor, anyone directly or indirectly employed by them or anyone for whose acts they may be liable, regardless of whether or not such claim, damage, loss or expense is caused in part by a party indemnified hereunder. Such obligation shall not be construed to negate, abridge, or reduce other rights or obligations of indemnity that would otherwise exist as to a party or person described in this Section 3.18.

§ 3.18.2 In claims against any person or entity indemnified under this Section 3.18 by an employee of the Contractor, a Subcontractor, anyone directly or indirectly employed by them or anyone for whose acts they may be liable, the indemnification obligation under Section 3.18.1 shall not be limited by a limitation on amount or type of damages, compensation or benefits payable by or for the Contractor or a Subcontractor under workers' compensation acts, disability benefit acts or other employee benefit acts.

ARTICLE 4 ARCHITECT

§ 4.1 GENERAL

§ 4.1.1 The Owner shall retain an architect lawfully licensed to practice architecture or an entity lawfully practicing architecture in the jurisdiction where the Project is located. That person or entity is identified as the Architect in the Agreement and is referred to throughout the Contract Documents as if singular in number.

AIA Document A201™ – 2007. Copyright © 1911, 1915, 1918, 1925, 1937, 1951, 1958, 1961, 1963, 1966, 1970, 1976, 1987, 1997 and 2007 by The American Institute of Architects. All rights reserved. **WARNING:** This AIA® Document is protected by U.S. Copyright Law and International Treaties. Unauthorized reproduction or distribution of this AIA® Document, or any portion of it, may result in severe civil and criminal penalties, and will be prosecuted to the maximum extent possible under the law. This draft was produced by AIA software at 13:27:21 on 10/31/2013 under Order No.4888000083_1 which expires on 02/17/2014, and is not for resale. User Notes: (1198933826)

§ 4.1.2 Duties, responsibilities and limitations of authority of the Architect as set forth in the Contract Documents shall not be restricted, modified or extended without written consent of the Owner, Contractor and Architect. Consent shall not be unreasonably withheld.

§ 4.1.3 If the employment of the Architect is terminated, the Owner shall employ a successor architect as to whom the Contractor has no reasonable objection and whose status under the Contract Documents shall be that of the Architect.

§ 4.2 ADMINISTRATION OF THE CONTRACT

§ 4.2.1 The Architect will provide administration of the Contract as described in the Contract Documents and will be an Owner's representative during construction until the date the Architect issues the final Certificate for Payment. The Architect will have authority to act on behalf of the Owner only to the extent provided in the Contract Documents.

§ 4.2.2 The Architect will visit the site at intervals appropriate to the stage of construction, or as otherwise agreed with the Owner, to become generally familiar with the progress and quality of the portion of the Work completed, and to determine in general if the Work observed is being performed in a manner indicating that the Work, when fully completed, will be in accordance with the Contract Documents. However, the Architect will not be required to make exhaustive or continuous on-site inspections to check the quality or quantity of the Work. The Architect will not have control over, charge of, or responsibility for, the construction means, methods, techniques, sequences or procedures, or for the safety precautions and programs in connection with the Work, since these are solely the Contractor's rights and responsibilities under the Contract Documents, except as provided in Section 3.3.1.

§ 4.2.3 On the basis of the site visits, the Architect will keep the Owner reasonably informed about the progress and quality of the portion of the Work completed, and report to the Owner (1) known deviations from the Contract Documents and from the most recent construction schedule submitted by the Contractor, and (2) defects and deficiencies observed in the Work. The Architect will not be responsible for the Contractor's failure to perform the Work in accordance with the requirements of the Contract Documents. The Architect will not have control over or charge of and will not be responsible for acts or omissions of the Contractor, Subcontractors, or their agents or employees, or any other persons or entities performing portions of the Work.

§ 4.2.4 COMMUNICATIONS FACILITATING CONTRACT ADMINISTRATION

Except as otherwise provided in the Contract Documents or when direct communications have been specially authorized, the Owner and Contractor shall endeavor to communicate with each other through the Architect about matters arising out of or relating to the Contract. Communications by and with the Architect's consultants shall be through the Architect. Communications by and with Subcontractors and material suppliers shall be through the Contractor. Communications by and with separate contractors shall be through the Owner.

§ 4.2.5 Based on the Architect's evaluations of the Contractor's Applications for Payment, the Architect will review and certify the amounts due the Contractor and will issue Certificates for Payment in such amounts.

§ 4.2.6 The Architect has authority to reject Work that does not conform to the Contract Documents. Whenever the Architect considers it necessary or advisable, the Architect will have authority to require inspection or testing of the Work in accordance with Sections 13.5.2 and 13.5.3, whether or not such Work is fabricated, installed or completed. However, neither this authority of the Architect nor a decision made in good faith either to exercise or not to exercise such authority shall give rise to a duty or responsibility of the Architect to the Contractor, Subcontractors, material and equipment suppliers, their agents or employees, or other persons or entities performing portions of the Work.

§ 4.2.7 The Architect will review and approve, or take other appropriate action upon, the Contractor's submittals such as Shop Drawings, Product Data and Samples, but only for the limited purpose of checking for conformance with information given and the design concept expressed in the Contract Documents. The Architect's action will be taken in accordance with the submittal schedule approved by the Architect or, in the absence of an approved submittal schedule, with reasonable promptness while allowing sufficient time in the Architect's professional judgment to permit adequate review. Review of such submittals is not conducted for the purpose of determining the accuracy and completeness of other details such as dimensions and quantities, or for substantiating instructions for installation or performance of equipment or systems, all of which remain the responsibility of the Contractor as required by the Contract Documents. The Architect's review of the Contractor's submittals shall not relieve the Contractor of the obligations under Sections 3.3, 3.5 and 3.12. The Architect's review shall not constitute approval of safety precautions or, unless otherwise specifically stated by the Architect, of any construction means, methods,

AIA Document A201™ – 2007. Copyright © 1911, 1915, 1918, 1925, 1937, 1951, 1958, 1961, 1963, 1966, 1970, 1976, 1987, 1997 and 2007 by The American Institute of Architects. All rights reserved. **WARNING:** This AIA® Document is protected by U.S. Copyright Law and International Treaties. Unauthorized reproduction or distribution of this AIA® Document, or any portion of it, may result in severe civil and criminal penalties, and will be prosecuted to the maximum extent possible under the law. This draft was produced by AIA software at 13:27:21 on 10/31/2013 under Order No.4888000083_1 which expires on 02/17/2014, and is not for resale. User Notes: (1198933826)

techniques, sequences or procedures. The Architect's approval of a specific item shall not indicate approval of an assembly of which the item is a component.

§ 4.2.8 The Architect will prepare Change Orders and Construction Change Directives, and may authorize minor changes in the Work as provided in Section 7.4. The Architect will investigate and make determinations and recommendations regarding concealed and unknown conditions as provided in Section 3.7.4.

§ 4.2.9 The Architect will conduct inspections to determine the date or dates of Substantial Completion and the date of final completion; issue Certificates of Substantial Completion pursuant to Section 9.8; receive and forward to the Owner, for the Owner's review and records, written warranties and related documents required by the Contract and assembled by the Contractor pursuant to Section 9.10; and issue a final Certificate for Payment pursuant to Section 9.10.

§ 4.2.10 If the Owner and Architect agree, the Architect will provide one or more project representatives to assist in carrying out the Architect's responsibilities at the site. The duties, responsibilities and limitations of authority of such project representatives shall be as set forth in an exhibit to be incorporated in the Contract Documents.

§ 4.2.11 The Architect will interpret and decide matters concerning performance under, and requirements of, the Contract Documents on written request of either the Owner or Contractor. The Architect's response to such requests will be made in writing within any time limits agreed upon or otherwise with reasonable promptness.

§ 4.2.12 Interpretations and decisions of the Architect will be consistent with the intent of, and reasonably inferable from, the Contract Documents and will be in writing or in the form of drawings. When making such interpretations and decisions, the Architect will endeavor to secure faithful performance by both Owner and Contractor, will not show partiality to either and will not be liable for results of interpretations or decisions rendered in good faith.

§ 4.2.13 The Architect's decisions on matters relating to aesthetic effect will be final if consistent with the intent expressed in the Contract Documents.

§ 4.2.14 The Architect will review and respond to requests for information about the Contract Documents. The Architect's response to such requests will be made in writing within any time limits agreed upon or otherwise with reasonable promptness. If appropriate, the Architect will prepare and issue supplemental Drawings and Specifications in response to the requests for information.

ARTICLE 5 SUBCONTRACTORS

§ 5.1 DEFINITIONS

§ 5.1.1 A Subcontractor is a person or entity who has a direct contract with the Contractor to perform a portion of the Work at the site. The term "Subcontractor" is referred to throughout the Contract Documents as if singular in number and means a Subcontractor or an authorized representative of the Subcontractor. The term "Subcontractor" does not include a separate contractor or subcontractors of a separate contractor.

§ 5.1.2 A Sub-subcontractor is a person or entity who has a direct or indirect contract with a Subcontractor to perform a portion of the Work at the site. The term "Sub-subcontractor" is referred to throughout the Contract Documents as if singular in number and means a Sub-subcontractor or an authorized representative of the Sub-subcontractor.

§ 5.2 AWARD OF SUBCONTRACTS AND OTHER CONTRACTS FOR PORTIONS OF THE WORK

§ 5.2.1 Unless otherwise stated in the Contract Documents or the bidding requirements, the Contractor, as soon as practicable after award of the Contract, shall furnish in writing to the Owner through the Architect the names of persons or entities (including those who are to furnish materials or equipment fabricated to a special design) proposed for each principal portion of the Work. The Architect may reply within 14 days to the Contractor in writing stating (1) whether the Owner or the Architect has reasonable objection to any such proposed person or entity or (2) that the Architect requires additional time for review. Failure of the Owner or Architect to reply within the 14-day period shall constitute notice of no reasonable objection.

§ 5.2.2 The Contractor shall not contract with a proposed person or entity to whom the Owner or Architect has made reasonable and timely objection. The Contractor shall not be required to contract with anyone to whom the Contractor has made reasonable objection.

AIA Document A201™ – 2007. Copyright © 1911, 1915, 1918, 1925, 1937, 1951, 1958, 1961, 1963, 1966, 1970, 1976, 1987, 1997 and 2007 by The American Institute of Architects. All rights reserved. **WARNING:** This AIA® Document is protected by U.S. Copyright Law and International Treaties. Unauthorized reproduction or distribution of this AIA® Document, or any portion of it, may result in severe civil and criminal penalties, and will be prosecuted to the maximum extent possible under the law. This draft was produced by AIA software at 13:27:21 on 10/31/2013 under Order No.4888000083_1 which expires on 02/17/2014, and is not for resale. User Notes: (1198933826)

§ 5.2.3 If the Owner or Architect has reasonable objection to a person or entity proposed by the Contractor, the Contractor shall propose another to whom the Owner or Architect has no reasonable objection. If the proposed but rejected Subcontractor was reasonably capable of performing the Work, the Contract Sum and Contract Time shall be increased or decreased by the difference, if any, occasioned by such change, and an appropriate Change Order shall be issued before commencement of the substitute Subcontractor's Work. However, no increase in the Contract Sum or Contract Time shall be allowed for such change unless the Contractor has acted promptly and responsively in submitting names as required.

§ 5.2.4 The Contractor shall not substitute a Subcontractor, person or entity previously selected if the Owner or Architect makes reasonable objection to such substitution.

§ 5.3 SUBCONTRACTUAL RELATIONS

By appropriate agreement, written where legally required for validity, the Contractor shall require each Subcontractor, to the extent of the Work to be performed by the Subcontractor, to be bound to the Contractor by terms of the Contract Documents, and to assume toward the Contractor all the obligations and responsibilities, including the responsibility for safety of the Subcontractor's Work, which the Contractor, by these Documents, assumes toward the Owner and Architect. Each subcontract agreement shall preserve and protect the rights of the Owner and Architect under the Contract Documents with respect to the Work to be performed by the Subcontractor so that subcontracting thereof will not prejudice such rights, and shall allow to the Subcontractor, unless specifically provided otherwise in the subcontract agreement, the benefit of all rights, remedies and redress against the Contractor that the Contractor, by the Contract Documents, has against the Owner. Where appropriate, the Contractor shall require each Subcontractor to enter into similar agreements with Sub-subcontractors. The Contractor shall make available to each proposed Subcontractor, prior to the execution of the subcontract agreement, copies of the Contract Documents to which the Subcontractor will be bound, and, upon written request of the Subcontractor, identify to the Subcontractor terms and conditions of the proposed subcontract agreement that may be at variance with the Contract Documents. Subcontractors will similarly make copies of applicable portions of such documents available to their respective proposed Sub-subcontractors.

§ 5.4 CONTINGENT ASSIGNMENT OF SUBCONTRACTS

§ 5.4.1 Each subcontract agreement for a portion of the Work is assigned by the Contractor to the Owner, provided that

- **.1** assignment is effective only after termination of the Contract by the Owner for cause pursuant to Section 14.2 and only for those subcontract agreements that the Owner accepts by notifying the Subcontractor and Contractor in writing; and
- **.2** assignment is subject to the prior rights of the surety, if any, obligated under bond relating to the Contract.

When the Owner accepts the assignment of a subcontract agreement, the Owner assumes the Contractor's rights and obligations under the subcontract.

§ 5.4.2 Upon such assignment, if the Work has been suspended for more than 30 days, the Subcontractor's compensation shall be equitably adjusted for increases in cost resulting from the suspension.

§ 5.4.3 Upon such assignment to the Owner under this Section 5.4, the Owner may further assign the subcontract to a successor contractor or other entity. If the Owner assigns the subcontract to a successor contractor or other entity, the Owner shall nevertheless remain legally responsible for all of the successor contractor's obligations under the subcontract.

ARTICLE 6 CONSTRUCTION BY OWNER OR BY SEPARATE CONTRACTORS

§ 6.1 OWNER'S RIGHT TO PERFORM CONSTRUCTION AND TO AWARD SEPARATE CONTRACTS

§ 6.1.1 The Owner reserves the right to perform construction or operations related to the Project with the Owner's own forces, and to award separate contracts in connection with other portions of the Project or other construction or operations on the site under Conditions of the Contract identical or substantially similar to these including those portions related to insurance and waiver of subrogation. If the Contractor claims that delay or additional cost is involved because of such action by the Owner, the Contractor shall make such Claim as provided in Article 15.

§ 6.1.2 When separate contracts are awarded for different portions of the Project or other construction or operations on the site, the term "Contractor" in the Contract Documents in each case shall mean the Contractor who executes each separate Owner-Contractor Agreement.

AIA Document A201™ – 2007. Copyright © 1911, 1915, 1918, 1925, 1937, 1951, 1958, 1961, 1963, 1966, 1970, 1976, 1987, 1997 and 2007 by The American Institute of Architects. All rights reserved. **WARNING:** This AIA® Document is protected by U.S. Copyright Law and International Treaties. Unauthorized reproduction or distribution of this AIA® Document, or any portion of it, may result in severe civil and criminal penalties, and will be prosecuted to the maximum extent possible under the law. This draft was produced by AIA software at 13:27:21 on 10/31/2013 under Order No.4888000083_1 which expires on 02/17/2014, and is not for resale. User Notes: (1198933826)

§ 6.1.3 The Owner shall provide for coordination of the activities of the Owner's own forces and of each separate contractor with the Work of the Contractor, who shall cooperate with them. The Contractor shall participate with other separate contractors and the Owner in reviewing their construction schedules. The Contractor shall make any revisions to the construction schedule deemed necessary after a joint review and mutual agreement. The construction schedules shall then constitute the schedules to be used by the Contractor, separate contractors and the Owner until subsequently revised.

§ 6.1.4 Unless otherwise provided in the Contract Documents, when the Owner performs construction or operations related to the Project with the Owner's own forces, the Owner shall be deemed to be subject to the same obligations and to have the same rights that apply to the Contractor under the Conditions of the Contract, including, without excluding others, those stated in Article 3, this Article 6 and Articles 10, 11 and 12.

§ 6.2 MUTUAL RESPONSIBILITY

§ 6.2.1 The Contractor shall afford the Owner and separate contractors reasonable opportunity for introduction and storage of their materials and equipment and performance of their activities, and shall connect and coordinate the Contractor's construction and operations with theirs as required by the Contract Documents.

§ 6.2.2 If part of the Contractor's Work depends for proper execution or results upon construction or operations by the Owner or a separate contractor, the Contractor shall, prior to proceeding with that portion of the Work, promptly report to the Architect apparent discrepancies or defects in such other construction that would render it unsuitable for such proper execution and results. Failure of the Contractor so to report shall constitute an acknowledgment that the Owner's or separate contractor's completed or partially completed construction is fit and proper to receive the Contractor's Work, except as to defects not then reasonably discoverable.

§ 6.2.3 The Contractor shall reimburse the Owner for costs the Owner incurs that are payable to a separate contractor because of the Contractor's delays, improperly timed activities or defective construction. The Owner shall be responsible to the Contractor for costs the Contractor incurs because of a separate contractor's delays, improperly timed activities, damage to the Work or defective construction.

§ 6.2.4 The Contractor shall promptly remedy damage the Contractor wrongfully causes to completed or partially completed construction or to property of the Owner or separate contractors as provided in Section 10.2.5.

§ 6.2.5 The Owner and each separate contractor shall have the same responsibilities for cutting and patching as are described for the Contractor in Section 3.14.

§ 6.3 OWNER'S RIGHT TO CLEAN UP

If a dispute arises among the Contractor, separate contractors and the Owner as to the responsibility under their respective contracts for maintaining the premises and surrounding area free from waste materials and rubbish, the Owner may clean up and the Architect will allocate the cost among those responsible.

ARTICLE 7 CHANGES IN THE WORK

§ 7.1 GENERAL

§ 7.1.1 Changes in the Work may be accomplished after execution of the Contract, and without invalidating the Contract, by Change Order, Construction Change Directive or order for a minor change in the Work, subject to the limitations stated in this Article 7 and elsewhere in the Contract Documents.

§ 7.1.2 A Change Order shall be based upon agreement among the Owner, Contractor and Architect; a Construction Change Directive requires agreement by the Owner and Architect and may or may not be agreed to by the Contractor; an order for a minor change in the Work may be issued by the Architect alone.

§ 7.1.3 Changes in the Work shall be performed under applicable provisions of the Contract Documents, and the Contractor shall proceed promptly, unless otherwise provided in the Change Order, Construction Change Directive or order for a minor change in the Work.

§ 7.2 CHANGE ORDERS

§ 7.2.1 A Change Order is a written instrument prepared by the Architect and signed by the Owner, Contractor and Architect stating their agreement upon all of the following:

.1 The change in the Work;
.2 The amount of the adjustment, if any, in the Contract Sum; and
.3 The extent of the adjustment, if any, in the Contract Time.

AIA Document A201™ – 2007. Copyright © 1911, 1915, 1918, 1925, 1937, 1951, 1958, 1961, 1963, 1966, 1970, 1976, 1987, 1997 and 2007 by The American Institute of Architects. All rights reserved. **WARNING:** This AIA® Document is protected by U.S. Copyright Law and International Treaties. Unauthorized reproduction or distribution of this AIA® Document, or any portion of it, may result in severe civil and criminal penalties, and will be prosecuted to the maximum extent possible under the law. This draft was produced by AIA software at 13:27:21 on 10/31/2013 under Order No.4888000083_1 which expires on 02/17/2014, and is not for resale. User Notes: (1198933826)

§ 7.3 CONSTRUCTION CHANGE DIRECTIVES

§ 7.3.1 A Construction Change Directive is a written order prepared by the Architect and signed by the Owner and Architect, directing a change in the Work prior to agreement on adjustment, if any, in the Contract Sum or Contract Time, or both. The Owner may by Construction Change Directive, without invalidating the Contract, order changes in the Work within the general scope of the Contract consisting of additions, deletions or other revisions, the Contract Sum and Contract Time being adjusted accordingly.

§ 7.3.2 A Construction Change Directive shall be used in the absence of total agreement on the terms of a Change Order.

§ 7.3.3 If the Construction Change Directive provides for an adjustment to the Contract Sum, the adjustment shall be based on one of the following methods:

- **.1** Mutual acceptance of a lump sum properly itemized and supported by sufficient substantiating data to permit evaluation;
- **.2** Unit prices stated in the Contract Documents or subsequently agreed upon;
- **.3** Cost to be determined in a manner agreed upon by the parties and a mutually acceptable fixed or percentage fee; or
- **.4** As provided in Section 7.3.7.

§ 7.3.4 If unit prices are stated in the Contract Documents or subsequently agreed upon, and if quantities originally contemplated are materially changed in a proposed Change Order or Construction Change Directive so that application of such unit prices to quantities of Work proposed will cause substantial inequity to the Owner or Contractor, the applicable unit prices shall be equitably adjusted.

§ 7.3.5 Upon receipt of a Construction Change Directive, the Contractor shall promptly proceed with the change in the Work involved and advise the Architect of the Contractor's agreement or disagreement with the method, if any, provided in the Construction Change Directive for determining the proposed adjustment in the Contract Sum or Contract Time.

§ 7.3.6 A Construction Change Directive signed by the Contractor indicates the Contractor's agreement therewith, including adjustment in Contract Sum and Contract Time or the method for determining them. Such agreement shall be effective immediately and shall be recorded as a Change Order.

§ 7.3.7 If the Contractor does not respond promptly or disagrees with the method for adjustment in the Contract Sum, the Architect shall determine the method and the adjustment on the basis of reasonable expenditures and savings of those performing the Work attributable to the change, including, in case of an increase in the Contract Sum, an amount for overhead and profit as set forth in the Agreement, or if no such amount is set forth in the Agreement, a reasonable amount. In such case, and also under Section 7.3.3.3, the Contractor shall keep and present, in such form as the Architect may prescribe, an itemized accounting together with appropriate supporting data. Unless otherwise provided in the Contract Documents, costs for the purposes of this Section 7.3.7 shall be limited to the following:

- **.1** Costs of labor, including social security, old age and unemployment insurance, fringe benefits required by agreement or custom, and workers' compensation insurance;
- **.2** Costs of materials, supplies and equipment, including cost of transportation, whether incorporated or consumed;
- **.3** Rental costs of machinery and equipment, exclusive of hand tools, whether rented from the Contractor or others;
- **.4** Costs of premiums for all bonds and insurance, permit fees, and sales, use or similar taxes related to the Work; and
- **.5** Additional costs of supervision and field office personnel directly attributable to the change.

§ 7.3.8 The amount of credit to be allowed by the Contractor to the Owner for a deletion or change that results in a net decrease in the Contract Sum shall be actual net cost as confirmed by the Architect. When both additions and credits covering related Work or substitutions are involved in a change, the allowance for overhead and profit shall be figured on the basis of net increase, if any, with respect to that change.

§ 7.3.9 Pending final determination of the total cost of a Construction Change Directive to the Owner, the Contractor may request payment for Work completed under the Construction Change Directive in Applications for Payment. The Architect will make an interim determination for purposes of monthly certification for payment for those costs and certify for payment the amount that the Architect determines, in the Architect's professional judgment, to be

AIA Document A201™ – 2007. Copyright © 1911, 1915, 1918, 1925, 1937, 1951, 1958, 1961, 1963, 1966, 1970, 1976, 1987, 1997 and 2007 by The American Institute of Architects. All rights reserved. **WARNING:** This AIA® Document is protected by U.S. Copyright Law and International Treaties. Unauthorized reproduction or distribution of this AIA® Document, or any portion of it, may result in severe civil and criminal penalties, and will be prosecuted to the maximum extent possible under the law. This draft was produced by AIA software at 13:27:21 on 10/31/2013 under Order No.4888000083_1 which expires on 02/17/2014, and is not for resale. User Notes: (1198933826)

reasonably justified. The Architect's interim determination of cost shall adjust the Contract Sum on the same basis as a Change Order, subject to the right of either party to disagree and assert a Claim in accordance with Article 15.

§ 7.3.10 When the Owner and Contractor agree with a determination made by the Architect concerning the adjustments in the Contract Sum and Contract Time, or otherwise reach agreement upon the adjustments, such agreement shall be effective immediately and the Architect will prepare a Change Order. Change Orders may be issued for all or any part of a Construction Change Directive.

§ 7.4 MINOR CHANGES IN THE WORK

The Architect has authority to order minor changes in the Work not involving adjustment in the Contract Sum or extension of the Contract Time and not inconsistent with the intent of the Contract Documents. Such changes will be effected by written order signed by the Architect and shall be binding on the Owner and Contractor.

ARTICLE 8 TIME

§ 8.1 DEFINITIONS

§ 8.1.1 Unless otherwise provided, Contract Time is the period of time, including authorized adjustments, allotted in the Contract Documents for Substantial Completion of the Work.

§ 8.1.2 The date of commencement of the Work is the date established in the Agreement.

§ 8.1.3 The date of Substantial Completion is the date certified by the Architect in accordance with Section 9.8.

§ 8.1.4 The term "day" as used in the Contract Documents shall mean calendar day unless otherwise specifically defined.

§ 8.2 PROGRESS AND COMPLETION

§ 8.2.1 Time limits stated in the Contract Documents are of the essence of the Contract. By executing the Agreement the Contractor confirms that the Contract Time is a reasonable period for performing the Work.

§ 8.2.2 The Contractor shall not knowingly, except by agreement or instruction of the Owner in writing, prematurely commence operations on the site or elsewhere prior to the effective date of insurance required by Article 11 to be furnished by the Contractor and Owner. The date of commencement of the Work shall not be changed by the effective date of such insurance.

§ 8.2.3 The Contractor shall proceed expeditiously with adequate forces and shall achieve Substantial Completion within the Contract Time.

§ 8.3 DELAYS AND EXTENSIONS OF TIME

§ 8.3.1 If the Contractor is delayed at any time in the commencement or progress of the Work by an act or neglect of the Owner or Architect, or of an employee of either, or of a separate contractor employed by the Owner; or by changes ordered in the Work; or by labor disputes, fire, unusual delay in deliveries, unavoidable casualties or other causes beyond the Contractor's control; or by delay authorized by the Owner pending mediation and arbitration; or by other causes that the Architect determines may justify delay, then the Contract Time shall be extended by Change Order for such reasonable time as the Architect may determine.

§ 8.3.2 Claims relating to time shall be made in accordance with applicable provisions of Article 15.

§ 8.3.3 This Section 8.3 does not preclude recovery of damages for delay by either party under other provisions of the Contract Documents.

ARTICLE 9 PAYMENTS AND COMPLETION

§ 9.1 CONTRACT SUM

The Contract Sum is stated in the Agreement and, including authorized adjustments, is the total amount payable by the Owner to the Contractor for performance of the Work under the Contract Documents.

§ 9.2 SCHEDULE OF VALUES

Where the Contract is based on a stipulated sum or Guaranteed Maximum Price, the Contractor shall submit to the Architect, before the first Application for Payment, a schedule of values allocating the entire Contract Sum to the various portions of the Work and prepared in such form and supported by such data to substantiate its accuracy as

AIA Document A201™ – 2007. Copyright © 1911, 1915, 1918, 1925, 1937, 1951, 1958, 1961, 1963, 1966, 1970, 1976, 1987, 1997 and 2007 by The American Institute of Architects. All rights reserved. **WARNING:** This AIA® Document is protected by U.S. Copyright Law and International Treaties. Unauthorized reproduction or distribution of this AIA® Document, or any portion of it, may result in severe civil and criminal penalties, and will be prosecuted to the maximum extent possible under the law. This draft was produced by AIA software at 13:27:21 on 10/31/2013 under Order No.4888000083_1 which expires on 02/17/2014, and is not for resale. User Notes: (1198933826)

the Architect may require. This schedule, unless objected to by the Architect, shall be used as a basis for reviewing the Contractor's Applications for Payment.

§ 9.3 APPLICATIONS FOR PAYMENT

§ 9.3.1 At least ten days before the date established for each progress payment, the Contractor shall submit to the Architect an itemized Application for Payment prepared in accordance with the schedule of values, if required under Section 9.2, for completed portions of the Work. Such application shall be notarized, if required, and supported by such data substantiating the Contractor's right to payment as the Owner or Architect may require, such as copies of requisitions from Subcontractors and material suppliers, and shall reflect retainage if provided for in the Contract Documents.

§ 9.3.1.1 As provided in Section 7.3.9, such applications may include requests for payment on account of changes in the Work that have been properly authorized by Construction Change Directives, or by interim determinations of the Architect, but not yet included in Change Orders.

§ 9.3.1.2 Applications for Payment shall not include requests for payment for portions of the Work for which the Contractor does not intend to pay a Subcontractor or material supplier, unless such Work has been performed by others whom the Contractor intends to pay.

§ 9.3.2 Unless otherwise provided in the Contract Documents, payments shall be made on account of materials and equipment delivered and suitably stored at the site for subsequent incorporation in the Work. If approved in advance by the Owner, payment may similarly be made for materials and equipment suitably stored off the site at a location agreed upon in writing. Payment for materials and equipment stored on or off the site shall be conditioned upon compliance by the Contractor with procedures satisfactory to the Owner to establish the Owner's title to such materials and equipment or otherwise protect the Owner's interest, and shall include the costs of applicable insurance, storage and transportation to the site for such materials and equipment stored off the site.

§ 9.3.3 The Contractor warrants that title to all Work covered by an Application for Payment will pass to the Owner no later than the time of payment. The Contractor further warrants that upon submittal of an Application for Payment all Work for which Certificates for Payment have been previously issued and payments received from the Owner shall, to the best of the Contractor's knowledge, information and belief, be free and clear of liens, claims, security interests or encumbrances in favor of the Contractor, Subcontractors, material suppliers, or other persons or entities making a claim by reason of having provided labor, materials and equipment relating to the Work.

§ 9.4 CERTIFICATES FOR PAYMENT

§ 9.4.1 The Architect will, within seven days after receipt of the Contractor's Application for Payment, either issue to the Owner a Certificate for Payment, with a copy to the Contractor, for such amount as the Architect determines is properly due, or notify the Contractor and Owner in writing of the Architect's reasons for withholding certification in whole or in part as provided in Section 9.5.1.

§ 9.4.2 The issuance of a Certificate for Payment will constitute a representation by the Architect to the Owner, based on the Architect's evaluation of the Work and the data comprising the Application for Payment, that, to the best of the Architect's knowledge, information and belief, the Work has progressed to the point indicated and that the quality of the Work is in accordance with the Contract Documents. The foregoing representations are subject to an evaluation of the Work for conformance with the Contract Documents upon Substantial Completion, to results of subsequent tests and inspections, to correction of minor deviations from the Contract Documents prior to completion and to specific qualifications expressed by the Architect. The issuance of a Certificate for Payment will further constitute a representation that the Contractor is entitled to payment in the amount certified. However, the issuance of a Certificate for Payment will not be a representation that the Architect has (1) made exhaustive or continuous on-site inspections to check the quality or quantity of the Work, (2) reviewed construction means, methods, techniques, sequences or procedures, (3) reviewed copies of requisitions received from Subcontractors and material suppliers and other data requested by the Owner to substantiate the Contractor's right to payment, or (4) made examination to ascertain how or for what purpose the Contractor has used money previously paid on account of the Contract Sum.

§ 9.5 DECISIONS TO WITHHOLD CERTIFICATION

§ 9.5.1 The Architect may withhold a Certificate for Payment in whole or in part, to the extent reasonably necessary to protect the Owner, if in the Architect's opinion the representations to the Owner required by Section 9.4.2 cannot be made. If the Architect is unable to certify payment in the amount of the Application, the Architect will notify the Contractor and Owner as provided in Section 9.4.1. If the Contractor and Architect cannot agree on a revised amount, the Architect will promptly issue a Certificate for Payment for the amount for which the Architect is able to

AIA Document A201™ – 2007. Copyright © 1911, 1915, 1918, 1925, 1937, 1951, 1958, 1961, 1963, 1966, 1970, 1976, 1987, 1997 and 2007 by The American Institute of Architects. All rights reserved. **WARNING:** This AIA® Document is protected by U.S. Copyright Law and International Treaties. Unauthorized reproduction or distribution of this AIA® Document, or any portion of it, may result in severe civil and criminal penalties, and will be prosecuted to the maximum extent possible under the law. This draft was produced by AIA software at 13:27:21 on 10/31/2013 under Order No.4888000083_1 which expires on 02/17/2014, and is not for resale. User Notes: (1198933826)

make such representations to the Owner. The Architect may also withhold a Certificate for Payment or, because of subsequently discovered evidence, may nullify the whole or a part of a Certificate for Payment previously issued, to such extent as may be necessary in the Architect's opinion to protect the Owner from loss for which the Contractor is responsible, including loss resulting from acts and omissions described in Section 3.3.2, because of

- **.1** defective Work not remedied;
- **.2** third party claims filed or reasonable evidence indicating probable filing of such claims unless security acceptable to the Owner is provided by the Contractor;
- **.3** failure of the Contractor to make payments properly to Subcontractors or for labor, materials or equipment;
- **.4** reasonable evidence that the Work cannot be completed for the unpaid balance of the Contract Sum;
- **.5** damage to the Owner or a separate contractor;
- **.6** reasonable evidence that the Work will not be completed within the Contract Time, and that the unpaid balance would not be adequate to cover actual or liquidated damages for the anticipated delay; or
- **.7** repeated failure to carry out the Work in accordance with the Contract Documents.

§ 9.5.2 When the above reasons for withholding certification are removed, certification will be made for amounts previously withheld.

§ 9.5.3 If the Architect withholds certification for payment under Section 9.5.1.3, the Owner may, at its sole option, issue joint checks to the Contractor and to any Subcontractor or material or equipment suppliers to whom the Contractor failed to make payment for Work properly performed or material or equipment suitably delivered. If the Owner makes payments by joint check, the Owner shall notify the Architect and the Architect will reflect such payment on the next Certificate for Payment.

§ 9.6 PROGRESS PAYMENTS

§ 9.6.1 After the Architect has issued a Certificate for Payment, the Owner shall make payment in the manner and within the time provided in the Contract Documents, and shall so notify the Architect.

§ 9.6.2 The Contractor shall pay each Subcontractor no later than seven days after receipt of payment from the Owner the amount to which the Subcontractor is entitled, reflecting percentages actually retained from payments to the Contractor on account of the Subcontractor's portion of the Work. The Contractor shall, by appropriate agreement with each Subcontractor, require each Subcontractor to make payments to Sub-subcontractors in a similar manner.

§ 9.6.3 The Architect will, on request, furnish to a Subcontractor, if practicable, information regarding percentages of completion or amounts applied for by the Contractor and action taken thereon by the Architect and Owner on account of portions of the Work done by such Subcontractor.

§ 9.6.4 The Owner has the right to request written evidence from the Contractor that the Contractor has properly paid Subcontractors and material and equipment suppliers amounts paid by the Owner to the Contractor for subcontracted Work. If the Contractor fails to furnish such evidence within seven days, the Owner shall have the right to contact Subcontractors to ascertain whether they have been properly paid. Neither the Owner nor Architect shall have an obligation to pay or to see to the payment of money to a Subcontractor, except as may otherwise be required by law.

§ 9.6.5 Contractor payments to material and equipment suppliers shall be treated in a manner similar to that provided in Sections 9.6.2, 9.6.3 and 9.6.4.

§ 9.6.6 A Certificate for Payment, a progress payment, or partial or entire use or occupancy of the Project by the Owner shall not constitute acceptance of Work not in accordance with the Contract Documents.

§ 9.6.7 Unless the Contractor provides the Owner with a payment bond in the full penal sum of the Contract Sum, payments received by the Contractor for Work properly performed by Subcontractors and suppliers shall be held by the Contractor for those Subcontractors or suppliers who performed Work or furnished materials, or both, under contract with the Contractor for which payment was made by the Owner. Nothing contained herein shall require money to be placed in a separate account and not commingled with money of the Contractor, shall create any fiduciary liability or tort liability on the part of the Contractor for breach of trust or shall entitle any person or entity to an award of punitive damages against the Contractor for breach of the requirements of this provision.

AIA Document A201™ – 2007. Copyright © 1911, 1915, 1918, 1925, 1937, 1951, 1958, 1961, 1963, 1966, 1970, 1976, 1987, 1997 and 2007 by The American Institute of Architects. All rights reserved. **WARNING:** This AIA® Document is protected by U.S. Copyright Law and International Treaties. Unauthorized reproduction or distribution of this AIA® Document, or any portion of it, may result in severe civil and criminal penalties, and will be prosecuted to the maximum extent possible under the law. This draft was produced by AIA software at 13:27:21 on 10/31/2013 under Order No.4888000083_1 which expires on 02/17/2014, and is not for resale. User Notes: (1198933826)

§ 9.7 FAILURE OF PAYMENT

If the Architect does not issue a Certificate for Payment, through no fault of the Contractor, within seven days after receipt of the Contractor's Application for Payment, or if the Owner does not pay the Contractor within seven days after the date established in the Contract Documents the amount certified by the Architect or awarded by binding dispute resolution, then the Contractor may, upon seven additional days' written notice to the Owner and Architect, stop the Work until payment of the amount owing has been received. The Contract Time shall be extended appropriately and the Contract Sum shall be increased by the amount of the Contractor's reasonable costs of shut-down, delay and start-up, plus interest as provided for in the Contract Documents.

§ 9.8 SUBSTANTIAL COMPLETION

§ 9.8.1 Substantial Completion is the stage in the progress of the Work when the Work or designated portion thereof is sufficiently complete in accordance with the Contract Documents so that the Owner can occupy or utilize the Work for its intended use.

§ 9.8.2 When the Contractor considers that the Work, or a portion thereof which the Owner agrees to accept separately, is substantially complete, the Contractor shall prepare and submit to the Architect a comprehensive list of items to be completed or corrected prior to final payment. Failure to include an item on such list does not alter the responsibility of the Contractor to complete all Work in accordance with the Contract Documents.

§ 9.8.3 Upon receipt of the Contractor's list, the Architect will make an inspection to determine whether the Work or designated portion thereof is substantially complete. If the Architect's inspection discloses any item, whether or not included on the Contractor's list, which is not sufficiently complete in accordance with the Contract Documents so that the Owner can occupy or utilize the Work or designated portion thereof for its intended use, the Contractor shall, before issuance of the Certificate of Substantial Completion, complete or correct such item upon notification by the Architect. In such case, the Contractor shall then submit a request for another inspection by the Architect to determine Substantial Completion.

§ 9.8.4 When the Work or designated portion thereof is substantially complete, the Architect will prepare a Certificate of Substantial Completion that shall establish the date of Substantial Completion, shall establish responsibilities of the Owner and Contractor for security, maintenance, heat, utilities, damage to the Work and insurance, and shall fix the time within which the Contractor shall finish all items on the list accompanying the Certificate. Warranties required by the Contract Documents shall commence on the date of Substantial Completion of the Work or designated portion thereof unless otherwise provided in the Certificate of Substantial Completion.

§ 9.8.5 The Certificate of Substantial Completion shall be submitted to the Owner and Contractor for their written acceptance of responsibilities assigned to them in such Certificate. Upon such acceptance and consent of surety, if any, the Owner shall make payment of retainage applying to such Work or designated portion thereof. Such payment shall be adjusted for Work that is incomplete or not in accordance with the requirements of the Contract Documents.

§ 9.9 PARTIAL OCCUPANCY OR USE

§ 9.9.1 The Owner may occupy or use any completed or partially completed portion of the Work at any stage when such portion is designated by separate agreement with the Contractor, provided such occupancy or use is consented to by the insurer as required under Section 11.3.1.5 and authorized by public authorities having jurisdiction over the Project. Such partial occupancy or use may commence whether or not the portion is substantially complete, provided the Owner and Contractor have accepted in writing the responsibilities assigned to each of them for payments, retainage, if any, security, maintenance, heat, utilities, damage to the Work and insurance, and have agreed in writing concerning the period for correction of the Work and commencement of warranties required by the Contract Documents. When the Contractor considers a portion substantially complete, the Contractor shall prepare and submit a list to the Architect as provided under Section 9.8.2. Consent of the Contractor to partial occupancy or use shall not be unreasonably withheld. The stage of the progress of the Work shall be determined by written agreement between the Owner and Contractor or, if no agreement is reached, by decision of the Architect.

§ 9.9.2 Immediately prior to such partial occupancy or use, the Owner, Contractor and Architect shall jointly inspect the area to be occupied or portion of the Work to be used in order to determine and record the condition of the Work.

§ 9.9.3 Unless otherwise agreed upon, partial occupancy or use of a portion or portions of the Work shall not constitute acceptance of Work not complying with the requirements of the Contract Documents.

AIA Document A201™ – 2007. Copyright © 1911, 1915, 1918, 1925, 1937, 1951, 1958, 1961, 1963, 1966, 1970, 1976, 1987, 1997 and 2007 by The American Institute of Architects. All rights reserved. **WARNING:** This AIA® Document is protected by U.S. Copyright Law and International Treaties. Unauthorized reproduction or distribution of this AIA® Document, or any portion of it, may result in severe civil and criminal penalties, and will be prosecuted to the maximum extent possible under the law. This draft was produced by AIA software at 13:27:21 on 10/31/2013 under Order No.4888000083_1 which expires on 02/17/2014, and is not for resale. User Notes: (1198933826)

§ 9.10 FINAL COMPLETION AND FINAL PAYMENT

§ 9.10.1 Upon receipt of the Contractor's written notice that the Work is ready for final inspection and acceptance and upon receipt of a final Application for Payment, the Architect will promptly make such inspection and, when the Architect finds the Work acceptable under the Contract Documents and the Contract fully performed, the Architect will promptly issue a final Certificate for Payment stating that to the best of the Architect's knowledge, information and belief, and on the basis of the Architect's on-site visits and inspections, the Work has been completed in accordance with terms and conditions of the Contract Documents and that the entire balance found to be due the Contractor and noted in the final Certificate is due and payable. The Architect's final Certificate for Payment will constitute a further representation that conditions listed in Section 9.10.2 as precedent to the Contractor's being entitled to final payment have been fulfilled.

§ 9.10.2 Neither final payment nor any remaining retained percentage shall become due until the Contractor submits to the Architect (1) an affidavit that payrolls, bills for materials and equipment, and other indebtedness connected with the Work for which the Owner or the Owner's property might be responsible or encumbered (less amounts withheld by Owner) have been paid or otherwise satisfied, (2) a certificate evidencing that insurance required by the Contract Documents to remain in force after final payment is currently in effect and will not be canceled or allowed to expire until at least 30 days' prior written notice has been given to the Owner, (3) a written statement that the Contractor knows of no substantial reason that the insurance will not be renewable to cover the period required by the Contract Documents, (4) consent of surety, if any, to final payment and (5), if required by the Owner, other data establishing payment or satisfaction of obligations, such as receipts, releases and waivers of liens, claims, security interests or encumbrances arising out of the Contract, to the extent and in such form as may be designated by the Owner. If a Subcontractor refuses to furnish a release or waiver required by the Owner, the Contractor may furnish a bond satisfactory to the Owner to indemnify the Owner against such lien. If such lien remains unsatisfied after payments are made, the Contractor shall refund to the Owner all money that the Owner may be compelled to pay in discharging such lien, including all costs and reasonable attorneys' fees.

§ 9.10.3 If, after Substantial Completion of the Work, final completion thereof is materially delayed through no fault of the Contractor or by issuance of Change Orders affecting final completion, and the Architect so confirms, the Owner shall, upon application by the Contractor and certification by the Architect, and without terminating the Contract, make payment of the balance due for that portion of the Work fully completed and accepted. If the remaining balance for Work not fully completed or corrected is less than retainage stipulated in the Contract Documents, and if bonds have been furnished, the written consent of surety to payment of the balance due for that portion of the Work fully completed and accepted shall be submitted by the Contractor to the Architect prior to certification of such payment. Such payment shall be made under terms and conditions governing final payment, except that it shall not constitute a waiver of claims.

§ 9.10.4 The making of final payment shall constitute a waiver of Claims by the Owner except those arising from

- **.1** liens, Claims, security interests or encumbrances arising out of the Contract and unsettled;
- **.2** failure of the Work to comply with the requirements of the Contract Documents; or
- **.3** terms of special warranties required by the Contract Documents.

§ 9.10.5 Acceptance of final payment by the Contractor, a Subcontractor or material supplier shall constitute a waiver of claims by that payee except those previously made in writing and identified by that payee as unsettled at the time of final Application for Payment.

ARTICLE 10 PROTECTION OF PERSONS AND PROPERTY

§ 10.1 SAFETY PRECAUTIONS AND PROGRAMS

The Contractor shall be responsible for initiating, maintaining and supervising all safety precautions and programs in connection with the performance of the Contract.

§ 10.2 SAFETY OF PERSONS AND PROPERTY

§ 10.2.1 The Contractor shall take reasonable precautions for safety of, and shall provide reasonable protection to prevent damage, injury or loss to

- **.1** employees on the Work and other persons who may be affected thereby;
- **.2** the Work and materials and equipment to be incorporated therein, whether in storage on or off the site, under care, custody or control of the Contractor or the Contractor's Subcontractors or Sub-subcontractors; and
- **.3** other property at the site or adjacent thereto, such as trees, shrubs, lawns, walks, pavements, roadways, structures and utilities not designated for removal, relocation or replacement in the course of construction.

AIA Document A201™ – 2007. Copyright © 1911, 1915, 1918, 1925, 1937, 1951, 1958, 1961, 1963, 1966, 1970, 1976, 1987, 1997 and 2007 by The American Institute of Architects. All rights reserved. **WARNING:** This AIA® Document is protected by U.S. Copyright Law and International Treaties. Unauthorized reproduction or distribution of this AIA® Document, or any portion of it, may result in severe civil and criminal penalties, and will be prosecuted to the maximum extent possible under the law. This draft was produced by AIA software at 13:27:21 on 10/31/2013 under Order No.4888000083_1 which expires on 02/17/2014, and is not for resale. User Notes: (1198933826)

§ 10.2.2 The Contractor shall comply with and give notices required by applicable laws, statutes, ordinances, codes, rules and regulations, and lawful orders of public authorities bearing on safety of persons or property or their protection from damage, injury or loss.

§ 10.2.3 The Contractor shall erect and maintain, as required by existing conditions and performance of the Contract, reasonable safeguards for safety and protection, including posting danger signs and other warnings against hazards, promulgating safety regulations and notifying owners and users of adjacent sites and utilities.

§ 10.2.4 When use or storage of explosives or other hazardous materials or equipment or unusual methods are necessary for execution of the Work, the Contractor shall exercise utmost care and carry on such activities under supervision of properly qualified personnel.

§ 10.2.5 The Contractor shall promptly remedy damage and loss (other than damage or loss insured under property insurance required by the Contract Documents) to property referred to in Sections 10.2.1.2 and 10.2.1.3 caused in whole or in part by the Contractor, a Subcontractor, a Sub-subcontractor, or anyone directly or indirectly employed by any of them, or by anyone for whose acts they may be liable and for which the Contractor is responsible under Sections 10.2.1.2 and 10.2.1.3, except damage or loss attributable to acts or omissions of the Owner or Architect or anyone directly or indirectly employed by either of them, or by anyone for whose acts either of them may be liable, and not attributable to the fault or negligence of the Contractor. The foregoing obligations of the Contractor are in addition to the Contractor's obligations under Section 3.18.

§ 10.2.6 The Contractor shall designate a responsible member of the Contractor's organization at the site whose duty shall be the prevention of accidents. This person shall be the Contractor's superintendent unless otherwise designated by the Contractor in writing to the Owner and Architect.

§ 10.2.7 The Contractor shall not permit any part of the construction or site to be loaded so as to cause damage or create an unsafe condition.

§ 10.2.8 INJURY OR DAMAGE TO PERSON OR PROPERTY

If either party suffers injury or damage to person or property because of an act or omission of the other party, or of others for whose acts such party is legally responsible, written notice of such injury or damage, whether or not insured, shall be given to the other party within a reasonable time not exceeding 21 days after discovery. The notice shall provide sufficient detail to enable the other party to investigate the matter.

§ 10.3 HAZARDOUS MATERIALS

§ 10.3.1 The Contractor is responsible for compliance with any requirements included in the Contract Documents regarding hazardous materials. If the Contractor encounters a hazardous material or substance not addressed in the Contract Documents and if reasonable precautions will be inadequate to prevent foreseeable bodily injury or death to persons resulting from a material or substance, including but not limited to asbestos or polychlorinated biphenyl (PCB), encountered on the site by the Contractor, the Contractor shall, upon recognizing the condition, immediately stop Work in the affected area and report the condition to the Owner and Architect in writing.

§ 10.3.2 Upon receipt of the Contractor's written notice, the Owner shall obtain the services of a licensed laboratory to verify the presence or absence of the material or substance reported by the Contractor and, in the event such material or substance is found to be present, to cause it to be rendered harmless. Unless otherwise required by the Contract Documents, the Owner shall furnish in writing to the Contractor and Architect the names and qualifications of persons or entities who are to perform tests verifying the presence or absence of such material or substance or who are to perform the task of removal or safe containment of such material or substance. The Contractor and the Architect will promptly reply to the Owner in writing stating whether or not either has reasonable objection to the persons or entities proposed by the Owner. If either the Contractor or Architect has an objection to a person or entity proposed by the Owner, the Owner shall propose another to whom the Contractor and the Architect have no reasonable objection. When the material or substance has been rendered harmless, Work in the affected area shall resume upon written agreement of the Owner and Contractor. By Change Order, the Contract Time shall be extended appropriately and the Contract Sum shall be increased in the amount of the Contractor's reasonable additional costs of shut-down, delay and start-up.

§ 10.3.3 To the fullest extent permitted by law, the Owner shall indemnify and hold harmless the Contractor, Subcontractors, Architect, Architect's consultants and agents and employees of any of them from and against claims, damages, losses and expenses, including but not limited to attorneys' fees, arising out of or resulting from

AIA Document A201™ – 2007. Copyright © 1911, 1915, 1918, 1925, 1937, 1951, 1958, 1961, 1963, 1966, 1970, 1976, 1987, 1997 and 2007 by The American Institute of Architects. All rights reserved. **WARNING:** This AIA® Document is protected by U.S. Copyright Law and International Treaties. Unauthorized reproduction or distribution of this AIA® Document, or any portion of it, may result in severe civil and criminal penalties, and will be prosecuted to the maximum extent possible under the law. This draft was produced by AIA software at 13:27:21 on 10/31/2013 under Order No.4888000083_1 which expires on 02/17/2014, and is not for resale. User Notes: (1198933826)

performance of the Work in the affected area if in fact the material or substance presents the risk of bodily injury or death as described in Section 10.3.1 and has not been rendered harmless, provided that such claim, damage, loss or expense is attributable to bodily injury, sickness, disease or death, or to injury to or destruction of tangible property (other than the Work itself), except to the extent that such damage, loss or expense is due to the fault or negligence of the party seeking indemnity.

§ 10.3.4 The Owner shall not be responsible under this Section 10.3 for materials or substances the Contractor brings to the site unless such materials or substances are required by the Contract Documents. The Owner shall be responsible for materials or substances required by the Contract Documents, except to the extent of the Contractor's fault or negligence in the use and handling of such materials or substances.

§ 10.3.5 The Contractor shall indemnify the Owner for the cost and expense the Owner incurs (1) for remediation of a material or substance the Contractor brings to the site and negligently handles, or (2) where the Contractor fails to perform its obligations under Section 10.3.1, except to the extent that the cost and expense are due to the Owner's fault or negligence.

§ 10.3.6 If, without negligence on the part of the Contractor, the Contractor is held liable by a government agency for the cost of remediation of a hazardous material or substance solely by reason of performing Work as required by the Contract Documents, the Owner shall indemnify the Contractor for all cost and expense thereby incurred.

§ 10.4 EMERGENCIES

In an emergency affecting safety of persons or property, the Contractor shall act, at the Contractor's discretion, to prevent threatened damage, injury or loss. Additional compensation or extension of time claimed by the Contractor on account of an emergency shall be determined as provided in Article 15 and Article 7.

ARTICLE 11 INSURANCE AND BONDS

§ 11.1 CONTRACTOR'S LIABILITY INSURANCE

§ 11.1.1 The Contractor shall purchase from and maintain in a company or companies lawfully authorized to do business in the jurisdiction in which the Project is located such insurance as will protect the Contractor from claims set forth below which may arise out of or result from the Contractor's operations and completed operations under the Contract and for which the Contractor may be legally liable, whether such operations be by the Contractor or by a Subcontractor or by anyone directly or indirectly employed by any of them, or by anyone for whose acts any of them may be liable:

- **.1** Claims under workers' compensation, disability benefit and other similar employee benefit acts that are applicable to the Work to be performed;
- **.2** Claims for damages because of bodily injury, occupational sickness or disease, or death of the Contractor's employees;
- **.3** Claims for damages because of bodily injury, sickness or disease, or death of any person other than the Contractor's employees;
- **.4** Claims for damages insured by usual personal injury liability coverage;
- **.5** Claims for damages, other than to the Work itself, because of injury to or destruction of tangible property, including loss of use resulting therefrom;
- **.6** Claims for damages because of bodily injury, death of a person or property damage arising out of ownership, maintenance or use of a motor vehicle;
- **.7** Claims for bodily injury or property damage arising out of completed operations; and
- **.8** Claims involving contractual liability insurance applicable to the Contractor's obligations under Section 3.18.

§ 11.1.2 The insurance required by Section 11.1.1 shall be written for not less than limits of liability specified in the Contract Documents or required by law, whichever coverage is greater. Coverages, whether written on an occurrence or claims-made basis, shall be maintained without interruption from the date of commencement of the Work until the date of final payment and termination of any coverage required to be maintained after final payment, and, with respect to the Contractor's completed operations coverage, until the expiration of the period for correction of Work or for such other period for maintenance of completed operations coverage as specified in the Contract Documents.

§ 11.1.3 Certificates of insurance acceptable to the Owner shall be filed with the Owner prior to commencement of the Work and thereafter upon renewal or replacement of each required policy of insurance. These certificates and the insurance policies required by this Section 11.1 shall contain a provision that coverages afforded under the policies will not be canceled or allowed to expire until at least 30 days' prior written notice has been given to the Owner. An

AIA Document A201™ – 2007. Copyright © 1911, 1915, 1918, 1925, 1937, 1951, 1958, 1961, 1963, 1966, 1970, 1976, 1987, 1997 and 2007 by The American Institute of Architects. All rights reserved. **WARNING:** This AIA® Document is protected by U.S. Copyright Law and International Treaties. Unauthorized reproduction or distribution of this AIA® Document, or any portion of it, may result in severe civil and criminal penalties, and will be prosecuted to the maximum extent possible under the law. This draft was produced by AIA software at 13:27:21 on 10/31/2013 under Order No.4888000083_1 which expires on 02/17/2014, and is not for resale. User Notes: (1198933826)

additional certificate evidencing continuation of liability coverage, including coverage for completed operations, shall be submitted with the final Application for Payment as required by Section 9.10.2 and thereafter upon renewal or replacement of such coverage until the expiration of the time required by Section 11.1.2. Information concerning reduction of coverage on account of revised limits or claims paid under the General Aggregate, or both, shall be furnished by the Contractor with reasonable promptness.

§ 11.1.4 The Contractor shall cause the commercial liability coverage required by the Contract Documents to include (1) the Owner, the Architect and the Architect's consultants as additional insureds for claims caused in whole or in part by the Contractor's negligent acts or omissions during the Contractor's operations; and (2) the Owner as an additional insured for claims caused in whole or in part by the Contractor's negligent acts or omissions during the Contractor's completed operations.

§ 11.2 OWNER'S LIABILITY INSURANCE

The Owner shall be responsible for purchasing and maintaining the Owner's usual liability insurance.

§ 11.3 PROPERTY INSURANCE

§ 11.3.1 Unless otherwise provided, the Owner shall purchase and maintain, in a company or companies lawfully authorized to do business in the jurisdiction in which the Project is located, property insurance written on a builder's risk "all-risk" or equivalent policy form in the amount of the initial Contract Sum, plus value of subsequent Contract Modifications and cost of materials supplied or installed by others, comprising total value for the entire Project at the site on a replacement cost basis without optional deductibles. Such property insurance shall be maintained, unless otherwise provided in the Contract Documents or otherwise agreed in writing by all persons and entities who are beneficiaries of such insurance, until final payment has been made as provided in Section 9.10 or until no person or entity other than the Owner has an insurable interest in the property required by this Section 11.3 to be covered, whichever is later. This insurance shall include interests of the Owner, the Contractor, Subcontractors and Sub-subcontractors in the Project.

§ 11.3.1.1 Property insurance shall be on an "all-risk" or equivalent policy form and shall include, without limitation, insurance against the perils of fire (with extended coverage) and physical loss or damage including, without duplication of coverage, theft, vandalism, malicious mischief, collapse, earthquake, flood, windstorm, falsework, testing and startup, temporary buildings and debris removal including demolition occasioned by enforcement of any applicable legal requirements, and shall cover reasonable compensation for Architect's and Contractor's services and expenses required as a result of such insured loss.

§ 11.3.1.2 If the Owner does not intend to purchase such property insurance required by the Contract and with all of the coverages in the amount described above, the Owner shall so inform the Contractor in writing prior to commencement of the Work. The Contractor may then effect insurance that will protect the interests of the Contractor, Subcontractors and Sub-subcontractors in the Work, and by appropriate Change Order the cost thereof shall be charged to the Owner. If the Contractor is damaged by the failure or neglect of the Owner to purchase or maintain insurance as described above, without so notifying the Contractor in writing, then the Owner shall bear all reasonable costs properly attributable thereto.

§ 11.3.1.3 If the property insurance requires deductibles, the Owner shall pay costs not covered because of such deductibles.

§ 11.3.1.4 This property insurance shall cover portions of the Work stored off the site, and also portions of the Work in transit.

§ 11.3.1.5 Partial occupancy or use in accordance with Section 9.9 shall not commence until the insurance company or companies providing property insurance have consented to such partial occupancy or use by endorsement or otherwise. The Owner and the Contractor shall take reasonable steps to obtain consent of the insurance company or companies and shall, without mutual written consent, take no action with respect to partial occupancy or use that would cause cancellation, lapse or reduction of insurance.

§ 11.3.2 BOILER AND MACHINERY INSURANCE

The Owner shall purchase and maintain boiler and machinery insurance required by the Contract Documents or by law, which shall specifically cover such insured objects during installation and until final acceptance by the Owner; this insurance shall include interests of the Owner, Contractor, Subcontractors and Sub-subcontractors in the Work, and the Owner and Contractor shall be named insureds.

AIA Document A201™ – 2007. Copyright © 1911, 1915, 1918, 1925, 1937, 1951, 1958, 1961, 1963, 1966, 1970, 1976, 1987, 1997 and 2007 by The American Institute of Architects. All rights reserved. **WARNING:** This AIA® Document is protected by U.S. Copyright Law and International Treaties. Unauthorized reproduction or distribution of this AIA® Document, or any portion of it, may result in severe civil and criminal penalties, and will be prosecuted to the maximum extent possible under the law. This draft was produced by AIA software at 13:27:21 on 10/31/2013 under Order No.4888000083_1 which expires on 02/17/2014, and is not for resale. User Notes: (1198933826)

§ 11.3.3 LOSS OF USE INSURANCE
The Owner, at the Owner's option, may purchase and maintain such insurance as will insure the Owner against loss of use of the Owner's property due to fire or other hazards, however caused. The Owner waives all rights of action against the Contractor for loss of use of the Owner's property, including consequential losses due to fire or other hazards however caused.

§ 11.3.4 If the Contractor requests in writing that insurance for risks other than those described herein or other special causes of loss be included in the property insurance policy, the Owner shall, if possible, include such insurance, and the cost thereof shall be charged to the Contractor by appropriate Change Order.

§ 11.3.5 If during the Project construction period the Owner insures properties, real or personal or both, at or adjacent to the site by property insurance under policies separate from those insuring the Project, or if after final payment property insurance is to be provided on the completed Project through a policy or policies other than those insuring the Project during the construction period, the Owner shall waive all rights in accordance with the terms of Section 11.3.7 for damages caused by fire or other causes of loss covered by this separate property insurance. All separate policies shall provide this waiver of subrogation by endorsement or otherwise.

§ 11.3.6 Before an exposure to loss may occur, the Owner shall file with the Contractor a copy of each policy that includes insurance coverages required by this Section 11.3. Each policy shall contain all generally applicable conditions, definitions, exclusions and endorsements related to this Project. Each policy shall contain a provision that the policy will not be canceled or allowed to expire, and that its limits will not be reduced, until at least 30 days' prior written notice has been given to the Contractor.

§ 11.3.7 WAIVERS OF SUBROGATION
The Owner and Contractor waive all rights against (1) each other and any of their subcontractors, sub-subcontractors, agents and employees, each of the other, and (2) the Architect, Architect's consultants, separate contractors described in Article 6, if any, and any of their subcontractors, sub-subcontractors, agents and employees, for damages caused by fire or other causes of loss to the extent covered by property insurance obtained pursuant to this Section 11.3 or other property insurance applicable to the Work, except such rights as they have to proceeds of such insurance held by the Owner as fiduciary. The Owner or Contractor, as appropriate, shall require of the Architect, Architect's consultants, separate contractors described in Article 6, if any, and the subcontractors, sub-subcontractors, agents and employees of any of them, by appropriate agreements, written where legally required for validity, similar waivers each in favor of other parties enumerated herein. The policies shall provide such waivers of subrogation by endorsement or otherwise. A waiver of subrogation shall be effective as to a person or entity even though that person or entity would otherwise have a duty of indemnification, contractual or otherwise, did not pay the insurance premium directly or indirectly, and whether or not the person or entity had an insurable interest in the property damaged.

§ 11.3.8 A loss insured under the Owner's property insurance shall be adjusted by the Owner as fiduciary and made payable to the Owner as fiduciary for the insureds, as their interests may appear, subject to requirements of any applicable mortgagee clause and of Section 11.3.10. The Contractor shall pay Subcontractors their just shares of insurance proceeds received by the Contractor, and by appropriate agreements, written where legally required for validity, shall require Subcontractors to make payments to their Sub-subcontractors in similar manner.

§ 11.3.9 If required in writing by a party in interest, the Owner as fiduciary shall, upon occurrence of an insured loss, give bond for proper performance of the Owner's duties. The cost of required bonds shall be charged against proceeds received as fiduciary. The Owner shall deposit in a separate account proceeds so received, which the Owner shall distribute in accordance with such agreement as the parties in interest may reach, or as determined in accordance with the method of binding dispute resolution selected in the Agreement between the Owner and Contractor. If after such loss no other special agreement is made and unless the Owner terminates the Contract for convenience, replacement of damaged property shall be performed by the Contractor after notification of a Change in the Work in accordance with Article 7.

§ 11.3.10 The Owner as fiduciary shall have power to adjust and settle a loss with insurers unless one of the parties in interest shall object in writing within five days after occurrence of loss to the Owner's exercise of this power; if such objection is made, the dispute shall be resolved in the manner selected by the Owner and Contractor as the method of binding dispute resolution in the Agreement. If the Owner and Contractor have selected arbitration as the method of binding dispute resolution, the Owner as fiduciary shall make settlement with insurers or, in the case of a dispute over distribution of insurance proceeds, in accordance with the directions of the arbitrators.

AIA Document A201™ – 2007. Copyright © 1911, 1915, 1918, 1925, 1937, 1951, 1958, 1961, 1963, 1966, 1970, 1976, 1987, 1997 and 2007 by The American Institute of Architects. All rights reserved. **WARNING:** This AIA® Document is protected by U.S. Copyright Law and International Treaties. Unauthorized reproduction or distribution of this AIA® Document, or any portion of it, may result in severe civil and criminal penalties, and will be prosecuted to the maximum extent possible under the law. This draft was produced by AIA software at 13:27:21 on 10/31/2013 under Order No.4888000083_1 which expires on 02/17/2014, and is not for resale. User Notes: (1198933826)

§ 11.4 PERFORMANCE BOND AND PAYMENT BOND

§ 11.4.1 The Owner shall have the right to require the Contractor to furnish bonds covering faithful performance of the Contract and payment of obligations arising thereunder as stipulated in bidding requirements or specifically required in the Contract Documents on the date of execution of the Contract.

§ 11.4.2 Upon the request of any person or entity appearing to be a potential beneficiary of bonds covering payment of obligations arising under the Contract, the Contractor shall promptly furnish a copy of the bonds or shall authorize a copy to be furnished.

ARTICLE 12 UNCOVERING AND CORRECTION OF WORK

§ 12.1 UNCOVERING OF WORK

§ 12.1.1 If a portion of the Work is covered contrary to the Architect's request or to requirements specifically expressed in the Contract Documents, it must, if requested in writing by the Architect, be uncovered for the Architect's examination and be replaced at the Contractor's expense without change in the Contract Time.

§ 12.1.2 If a portion of the Work has been covered that the Architect has not specifically requested to examine prior to its being covered, the Architect may request to see such Work and it shall be uncovered by the Contractor. If such Work is in accordance with the Contract Documents, costs of uncovering and replacement shall, by appropriate Change Order, be at the Owner's expense. If such Work is not in accordance with the Contract Documents, such costs and the cost of correction shall be at the Contractor's expense unless the condition was caused by the Owner or a separate contractor in which event the Owner shall be responsible for payment of such costs.

§ 12.2 CORRECTION OF WORK

§ 12.2.1 BEFORE OR AFTER SUBSTANTIAL COMPLETION

The Contractor shall promptly correct Work rejected by the Architect or failing to conform to the requirements of the Contract Documents, whether discovered before or after Substantial Completion and whether or not fabricated, installed or completed. Costs of correcting such rejected Work, including additional testing and inspections, the cost of uncovering and replacement, and compensation for the Architect's services and expenses made necessary thereby, shall be at the Contractor's expense.

§ 12.2.2 AFTER SUBSTANTIAL COMPLETION

§ 12.2.2.1 In addition to the Contractor's obligations under Section 3.5, if, within one year after the date of Substantial Completion of the Work or designated portion thereof or after the date for commencement of warranties established under Section 9.9.1, or by terms of an applicable special warranty required by the Contract Documents, any of the Work is found to be not in accordance with the requirements of the Contract Documents, the Contractor shall correct it promptly after receipt of written notice from the Owner to do so unless the Owner has previously given the Contractor a written acceptance of such condition. The Owner shall give such notice promptly after discovery of the condition. During the one-year period for correction of Work, if the Owner fails to notify the Contractor and give the Contractor an opportunity to make the correction, the Owner waives the rights to require correction by the Contractor and to make a claim for breach of warranty. If the Contractor fails to correct nonconforming Work within a reasonable time during that period after receipt of notice from the Owner or Architect, the Owner may correct it in accordance with Section 2.4.

§ 12.2.2.2 The one-year period for correction of Work shall be extended with respect to portions of Work first performed after Substantial Completion by the period of time between Substantial Completion and the actual completion of that portion of the Work.

§ 12.2.2.3 The one-year period for correction of Work shall not be extended by corrective Work performed by the Contractor pursuant to this Section 12.2.

§ 12.2.3 The Contractor shall remove from the site portions of the Work that are not in accordance with the requirements of the Contract Documents and are neither corrected by the Contractor nor accepted by the Owner.

§ 12.2.4 The Contractor shall bear the cost of correcting destroyed or damaged construction, whether completed or partially completed, of the Owner or separate contractors caused by the Contractor's correction or removal of Work that is not in accordance with the requirements of the Contract Documents.

§ 12.2.5 Nothing contained in this Section 12.2 shall be construed to establish a period of limitation with respect to other obligations the Contractor has under the Contract Documents. Establishment of the one-year period for correction of Work as described in Section 12.2.2 relates only to the specific obligation of the Contractor to correct

AIA Document A201™ – 2007. Copyright © 1911, 1915, 1918, 1925, 1937, 1951, 1958, 1961, 1963, 1966, 1970, 1976, 1987, 1997 and 2007 by The American Institute of Architects. All rights reserved. **WARNING:** This AIA® Document is protected by U.S. Copyright Law and International Treaties. Unauthorized reproduction or distribution of this AIA® Document, or any portion of it, may result in severe civil and criminal penalties, and will be prosecuted to the maximum extent possible under the law. This draft was produced by AIA software at 13:27:21 on 10/31/2013 under Order No.4888000083_1 which expires on 02/17/2014, and is not for resale. User Notes: (1198933826)

the Work, and has no relationship to the time within which the obligation to comply with the Contract Documents may be sought to be enforced, nor to the time within which proceedings may be commenced to establish the Contractor's liability with respect to the Contractor's obligations other than specifically to correct the Work.

§ 12.3 ACCEPTANCE OF NONCONFORMING WORK

If the Owner prefers to accept Work that is not in accordance with the requirements of the Contract Documents, the Owner may do so instead of requiring its removal and correction, in which case the Contract Sum will be reduced as appropriate and equitable. Such adjustment shall be effected whether or not final payment has been made.

ARTICLE 13 MISCELLANEOUS PROVISIONS

§ 13.1 GOVERNING LAW

The Contract shall be governed by the law of the place where the Project is located except that, if the parties have selected arbitration as the method of binding dispute resolution, the Federal Arbitration Act shall govern Section 15.4.

§ 13.2 SUCCESSORS AND ASSIGNS

§ 13.2.1 The Owner and Contractor respectively bind themselves, their partners, successors, assigns and legal representatives to covenants, agreements and obligations contained in the Contract Documents. Except as provided in Section 13.2.2, neither party to the Contract shall assign the Contract as a whole without written consent of the other. If either party attempts to make such an assignment without such consent, that party shall nevertheless remain legally responsible for all obligations under the Contract.

§ 13.2.2 The Owner may, without consent of the Contractor, assign the Contract to a lender providing construction financing for the Project, if the lender assumes the Owner's rights and obligations under the Contract Documents. The Contractor shall execute all consents reasonably required to facilitate such assignment.

§ 13.3 WRITTEN NOTICE

Written notice shall be deemed to have been duly served if delivered in person to the individual, to a member of the firm or entity, or to an officer of the corporation for which it was intended; or if delivered at, or sent by registered or certified mail or by courier service providing proof of delivery to, the last business address known to the party giving notice.

§ 13.4 RIGHTS AND REMEDIES

§ 13.4.1 Duties and obligations imposed by the Contract Documents and rights and remedies available thereunder shall be in addition to and not a limitation of duties, obligations, rights and remedies otherwise imposed or available by law.

§ 13.4.2 No action or failure to act by the Owner, Architect or Contractor shall constitute a waiver of a right or duty afforded them under the Contract, nor shall such action or failure to act constitute approval of or acquiescence in a breach there under, except as may be specifically agreed in writing.

§ 13.5 TESTS AND INSPECTIONS

§ 13.5.1 Tests, inspections and approvals of portions of the Work shall be made as required by the Contract Documents and by applicable laws, statutes, ordinances, codes, rules and regulations or lawful orders of public authorities. Unless otherwise provided, the Contractor shall make arrangements for such tests, inspections and approvals with an independent testing laboratory or entity acceptable to the Owner, or with the appropriate public authority, and shall bear all related costs of tests, inspections and approvals. The Contractor shall give the Architect timely notice of when and where tests and inspections are to be made so that the Architect may be present for such procedures. The Owner shall bear costs of (1) tests, inspections or approvals that do not become requirements until after bids are received or negotiations concluded, and (2) tests, inspections or approvals where building codes or applicable laws or regulations prohibit the Owner from delegating their cost to the Contractor.

§ 13.5.2 If the Architect, Owner or public authorities having jurisdiction determine that portions of the Work require additional testing, inspection or approval not included under Section 13.5.1, the Architect will, upon written authorization from the Owner, instruct the Contractor to make arrangements for such additional testing, inspection or approval by an entity acceptable to the Owner, and the Contractor shall give timely notice to the Architect of when and where tests and inspections are to be made so that the Architect may be present for such procedures. Such costs, except as provided in Section 13.5.3, shall be at the Owner's expense.

AIA Document A201™ – 2007. Copyright © 1911, 1915, 1918, 1925, 1937, 1951, 1958, 1961, 1963, 1966, 1970, 1976, 1987, 1997 and 2007 by The American Institute of Architects. All rights reserved. **WARNING:** This AIA® Document is protected by U.S. Copyright Law and International Treaties. Unauthorized reproduction or distribution of this AIA® Document, or any portion of it, may result in severe civil and criminal penalties, and will be prosecuted to the maximum extent possible under the law. This draft was produced by AIA software at 13:27:21 on 10/31/2013 under Order No.4888000083_1 which expires on 02/17/2014, and is not for resale. User Notes: (1198933826)

§ 13.5.3 If such procedures for testing, inspection or approval under Sections 13.5.1 and 13.5.2 reveal failure of the portions of the Work to comply with requirements established by the Contract Documents, all costs made necessary by such failure including those of repeated procedures and compensation for the Architect's services and expenses shall be at the Contractor's expense.

§ 13.5.4 Required certificates of testing, inspection or approval shall, unless otherwise required by the Contract Documents, be secured by the Contractor and promptly delivered to the Architect.

§ 13.5.5 If the Architect is to observe tests, inspections or approvals required by the Contract Documents, the Architect will do so promptly and, where practicable, at the normal place of testing.

§ 13.5.6 Tests or inspections conducted pursuant to the Contract Documents shall be made promptly to avoid unreasonable delay in the Work.

§ 13.6 INTEREST

Payments due and unpaid under the Contract Documents shall bear interest from the date payment is due at such rate as the parties may agree upon in writing or, in the absence thereof, at the legal rate prevailing from time to time at the place where the Project is located.

§ 13.7 TIME LIMITS ON CLAIMS

The Owner and Contractor shall commence all claims and causes of action, whether in contract, tort, breach of warranty or otherwise, against the other arising out of or related to the Contract in accordance with the requirements of the final dispute resolution method selected in the Agreement within the time period specified by applicable law, but in any case not more than 10 years after the date of Substantial Completion of the Work. The Owner and Contractor waive all claims and causes of action not commenced in accordance with this Section 13.7.

ARTICLE 14 TERMINATION OR SUSPENSION OF THE CONTRACT

§ 14.1 TERMINATION BY THE CONTRACTOR

§ 14.1.1 The Contractor may terminate the Contract if the Work is stopped for a period of 30 consecutive days through no act or fault of the Contractor or a Subcontractor, Sub-subcontractor or their agents or employees or any other persons or entities performing portions of the Work under direct or indirect contract with the Contractor, for any of the following reasons:

- **.1** Issuance of an order of a court or other public authority having jurisdiction that requires all Work to be stopped;
- **.2** An act of government, such as a declaration of national emergency that requires all Work to be stopped;
- **.3** Because the Architect has not issued a Certificate for Payment and has not notified the Contractor of the reason for withholding certification as provided in Section 9.4.1, or because the Owner has not made payment on a Certificate for Payment within the time stated in the Contract Documents; or
- **.4** The Owner has failed to furnish to the Contractor promptly, upon the Contractor's request, reasonable evidence as required by Section 2.2.1.

§ 14.1.2 The Contractor may terminate the Contract if, through no act or fault of the Contractor or a Subcontractor, Sub-subcontractor or their agents or employees or any other persons or entities performing portions of the Work under direct or indirect contract with the Contractor, repeated suspensions, delays or interruptions of the entire Work by the Owner as described in Section 14.3 constitute in the aggregate more than 100 percent of the total number of days scheduled for completion, or 120 days in any 365-day period, whichever is less.

§ 14.1.3 If one of the reasons described in Section 14.1.1 or 14.1.2 exists, the Contractor may, upon seven days' written notice to the Owner and Architect, terminate the Contract and recover from the Owner payment for Work executed, including reasonable overhead and profit, costs incurred by reason of such termination, and damages.

§ 14.1.4 If the Work is stopped for a period of 60 consecutive days through no act or fault of the Contractor or a Subcontractor or their agents or employees or any other persons performing portions of the Work under contract with the Contractor because the Owner has repeatedly failed to fulfill the Owner's obligations under the Contract Documents with respect to matters important to the progress of the Work, the Contractor may, upon seven additional days' written notice to the Owner and the Architect, terminate the Contract and recover from the Owner as provided in Section 14.1.3.

AIA Document A201™ – 2007. Copyright © 1911, 1915, 1918, 1925, 1937, 1951, 1958, 1961, 1963, 1966, 1970, 1976, 1987, 1997 and 2007 by The American Institute of Architects. All rights reserved. **WARNING:** This AIA® Document is protected by U.S. Copyright Law and International Treaties. Unauthorized reproduction or distribution of this AIA® Document, or any portion of it, may result in severe civil and criminal penalties, and will be prosecuted to the maximum extent possible under the law. This draft was produced by AIA software at 13:27:21 on 10/31/2013 under Order No.4888000083_1 which expires on 02/17/2014, and is not for resale. User Notes: (1198933826)

§ 14.2 TERMINATION BY THE OWNER FOR CAUSE

§ 14.2.1 The Owner may terminate the Contract if the Contractor

- **.1** repeatedly refuses or fails to supply enough properly skilled workers or proper materials;
- **.2** fails to make payment to Subcontractors for materials or labor in accordance with the respective agreements between the Contractor and the Subcontractors;
- **.3** repeatedly disregards applicable laws, statutes, ordinances, codes, rules and regulations, or lawful orders of a public authority; or
- **.4** otherwise is guilty of substantial breach of a provision of the Contract Documents.

§ 14.2.2 When any of the above reasons exist, the Owner, upon certification by the Initial Decision Maker that sufficient cause exists to justify such action, may without prejudice to any other rights or remedies of the Owner and after giving the Contractor and the Contractor's surety, if any, seven days' written notice, terminate employment of the Contractor and may, subject to any prior rights of the surety:

- **.1** Exclude the Contractor from the site and take possession of all materials, equipment, tools, and construction equipment and machinery thereon owned by the Contractor;
- **.2** Accept assignment of subcontracts pursuant to Section 5.4; and
- **.3** Finish the Work by whatever reasonable method the Owner may deem expedient. Upon written request of the Contractor, the Owner shall furnish to the Contractor a detailed accounting of the costs incurred by the Owner in finishing the Work.

§ 14.2.3 When the Owner terminates the Contract for one of the reasons stated in Section 14.2.1, the Contractor shall not be entitled to receive further payment until the Work is finished.

§ 14.2.4 If the unpaid balance of the Contract Sum exceeds costs of finishing the Work, including compensation for the Architect's services and expenses made necessary thereby, and other damages incurred by the Owner and not expressly waived, such excess shall be paid to the Contractor. If such costs and damages exceed the unpaid balance, the Contractor shall pay the difference to the Owner. The amount to be paid to the Contractor or Owner, as the case may be, shall be certified by the Initial Decision Maker, upon application, and this obligation for payment shall survive termination of the Contract.

§ 14.3 SUSPENSION BY THE OWNER FOR CONVENIENCE

§ 14.3.1 The Owner may, without cause, order the Contractor in writing to suspend, delay or interrupt the Work in whole or in part for such period of time as the Owner may determine.

§ 14.3.2 The Contract Sum and Contract Time shall be adjusted for increases in the cost and time caused by suspension, delay or interruption as described in Section 14.3.1. Adjustment of the Contract Sum shall include profit. No adjustment shall be made to the extent

- **.1** that performance is, was or would have been so suspended, delayed or interrupted by another cause for which the Contractor is responsible; or
- **.2** that an equitable adjustment is made or denied under another provision of the Contract.

§ 14.4 TERMINATION BY THE OWNER FOR CONVENIENCE

§ 14.4.1 The Owner may, at any time, terminate the Contract for the Owner's convenience and without cause.

§ 14.4.2 Upon receipt of written notice from the Owner of such termination for the Owner's convenience, the Contractor shall

- **.1** cease operations as directed by the Owner in the notice;
- **.2** take actions necessary, or that the Owner may direct, for the protection and preservation of the Work; and
- **.3** except for Work directed to be performed prior to the effective date of termination stated in the notice, terminate all existing subcontracts and purchase orders and enter into no further subcontracts and purchase orders.

§ 14.4.3 In case of such termination for the Owner's convenience, the Contractor shall be entitled to receive payment for Work executed, and costs incurred by reason of such termination, along with reasonable overhead and profit on the Work not executed.

AIA Document A201™ – 2007. Copyright © 1911, 1915, 1918, 1925, 1937, 1951, 1958, 1961, 1963, 1966, 1970, 1976, 1987, 1997 and 2007 by The American Institute of Architects. All rights reserved. **WARNING:** This AIA® Document is protected by U.S. Copyright Law and International Treaties. Unauthorized reproduction or distribution of this AIA® Document, or any portion of it, may result in severe civil and criminal penalties, and will be prosecuted to the maximum extent possible under the law. This draft was produced by AIA software at 13:27:21 on 10/31/2013 under Order No.4888000083_1 which expires on 02/17/2014, and is not for resale. User Notes: (1198933826)

ARTICLE 15 CLAIMS AND DISPUTES

§ 15.1 CLAIMS

§ 15.1.1 DEFINITION

A Claim is a demand or assertion by one of the parties seeking, as a matter of right, payment of money, or other relief with respect to the terms of the Contract. The term "Claim" also includes other disputes and matters in question between the Owner and Contractor arising out of or relating to the Contract. The responsibility to substantiate Claims shall rest with the party making the Claim.

§ 15.1.2 NOTICE OF CLAIMS

Claims by either the Owner or Contractor must be initiated by written notice to the other party and to the Initial Decision Maker with a copy sent to the Architect, if the Architect is not serving as the Initial Decision Maker. Claims by either party must be initiated within 21 days after occurrence of the event giving rise to such Claim or within 21 days after the claimant first recognizes the condition giving rise to the Claim, whichever is later.

§ 15.1.3 CONTINUING CONTRACT PERFORMANCE

Pending final resolution of a Claim, except as otherwise agreed in writing or as provided in Section 9.7 and Article 14, the Contractor shall proceed diligently with performance of the Contract and the Owner shall continue to make payments in accordance with the Contract Documents. The Architect will prepare Change Orders and issue Certificates for Payment in accordance with the decisions of the Initial Decision Maker.

§ 15.1.4 CLAIMS FOR ADDITIONAL COST

If the Contractor wishes to make a Claim for an increase in the Contract Sum, written notice as provided herein shall be given before proceeding to execute the Work. Prior notice is not required for Claims relating to an emergency endangering life or property arising under Section 10.4.

§ 15.1.5 CLAIMS FOR ADDITIONAL TIME

§ 15.1.5.1 If the Contractor wishes to make a Claim for an increase in the Contract Time, written notice as provided herein shall be given. The Contractor's Claim shall include an estimate of cost and of probable effect of delay on progress of the Work. In the case of a continuing delay, only one Claim is necessary.

§ 15.1.5.2 If adverse weather conditions are the basis for a Claim for additional time, such Claim shall be documented by data substantiating that weather conditions were abnormal for the period of time, could not have been reasonably anticipated and had an adverse effect on the scheduled construction.

§ 15.1.6 CLAIMS FOR CONSEQUENTIAL DAMAGES

The Contractor and Owner waive Claims against each other for consequential damages arising out of or relating to this Contract. This mutual waiver includes

- **.1** damages incurred by the Owner for rental expenses, for losses of use, income, profit, financing, business and reputation, and for loss of management or employee productivity or of the services of such persons; and
- **.2** damages incurred by the Contractor for principal office expenses including the compensation of personnel stationed there, for losses of financing, business and reputation, and for loss of profit except anticipated profit arising directly from the Work.

This mutual waiver is applicable, without limitation, to all consequential damages due to either party's termination in accordance with Article 14. Nothing contained in this Section 15.1.6 shall be deemed to preclude an award of liquidated damages, when applicable, in accordance with the requirements of the Contract Documents.

§ 15.2 INITIAL DECISION

§ 15.2.1 Claims, excluding those arising under Sections 10.3, 10.4, 11.3.9, and 11.3.10, shall be referred to the Initial Decision Maker for initial decision. The Architect will serve as the Initial Decision Maker, unless otherwise indicated in the Agreement. Except for those Claims excluded by this Section 15.2.1, an initial decision shall be required as a condition precedent to mediation of any Claim arising prior to the date final payment is due, unless 30 days have passed after the Claim has been referred to the Initial Decision Maker with no decision having been rendered. Unless the Initial Decision Maker and all affected parties agree, the Initial Decision Maker will not decide disputes between the Contractor and persons or entities other than the Owner.

§ 15.2.2 The Initial Decision Maker will review Claims and within ten days of the receipt of a Claim take one or more of the following actions: (1) request additional supporting data from the claimant or a response with supporting data from the other party, (2) reject the Claim in whole or in part, (3) approve the Claim, (4) suggest a compromise,

AIA Document A201™ – 2007. Copyright © 1911, 1915, 1918, 1925, 1937, 1951, 1958, 1961, 1963, 1966, 1970, 1976, 1987, 1997 and 2007 by The American Institute of Architects. All rights reserved. **WARNING:** This AIA® Document is protected by U.S. Copyright Law and International Treaties. Unauthorized reproduction or distribution of this AIA® Document, or any portion of it, may result in severe civil and criminal penalties, and will be prosecuted to the maximum extent possible under the law. This draft was produced by AIA software at 13:27:21 on 10/31/2013 under Order No.4888000083_1 which expires on 02/17/2014, and is not for resale. User Notes: (1198933826)

or (5) advise the parties that the Initial Decision Maker is unable to resolve the Claim if the Initial Decision Maker lacks sufficient information to evaluate the merits of the Claim or if the Initial Decision Maker concludes that, in th Initial Decision Maker's sole discretion, it would be inappropriate for the Initial Decision Maker to resolve the Claim.

§ 15.2.3 In evaluating Claims, the Initial Decision Maker may, but shall not be obligated to, consult with or seek information from either party or from persons with special knowledge or expertise who may assist the Initial Decision Maker in rendering a decision. The Initial Decision Maker may request the Owner to authorize retention of such persons at the Owner's expense.

§ 15.2.4 If the Initial Decision Maker requests a party to provide a response to a Claim or to furnish additional supporting data, such party shall respond, within ten days after receipt of such request, and shall either (1) provide a response on the requested supporting data, (2) advise the Initial Decision Maker when the response or supporting data will be furnished or (3) advise the Initial Decision Maker that no supporting data will be furnished. Upon receipt of the response or supporting data, if any, the Initial Decision Maker will either reject or approve the Claim in whole or in part.

§ 15.2.5 The Initial Decision Maker will render an initial decision approving or rejecting the Claim, or indicating that the Initial Decision Maker is unable to resolve the Claim. This initial decision shall (1) be in writing; (2) state the reasons therefor; and (3) notify the parties and the Architect, if the Architect is not serving as the Initial Decision Maker, of any change in the Contract Sum or Contract Time or both. The initial decision shall be final and binding on the parties but subject to mediation and, if the parties fail to resolve their dispute through mediation, to binding dispute resolution.

§ 15.2.6 Either party may file for mediation of an initial decision at any time, subject to the terms of Section 15.2.6.1.

§ 15.2.6.1 Either party may, within 30 days from the date of an initial decision, demand in writing that the other party file for mediation within 60 days of the initial decision. If such a demand is made and the party receiving the demand fails to file for mediation within the time required, then both parties waive their rights to mediate or pursue binding dispute resolution proceedings with respect to the initial decision.

§ 15.2.7 In the event of a Claim against the Contractor, the Owner may, but is not obligated to, notify the surety, if any, of the nature and amount of the Claim. If the Claim relates to a possibility of a Contractor's default, the Owner may, but is not obligated to, notify the surety and request the surety's assistance in resolving the controversy.

§ 15.2.8 If a Claim relates to or is the subject of a mechanic's lien, the party asserting such Claim may proceed in accordance with applicable law to comply with the lien notice or filing deadlines.

§ 15.3 MEDIATION

§ 15.3.1 Claims, disputes, or other matters in controversy arising out of or related to the Contract except those waived as provided for in Sections 9.10.4, 9.10.5, and 15.1.6 shall be subject to mediation as a condition precedent to binding dispute resolution.

§ 15.3.2 The parties shall endeavor to resolve their Claims by mediation which, unless the parties mutually agree otherwise, shall be administered by the American Arbitration Association in accordance with its Construction Industry Mediation Procedures in effect on the date of the Agreement. A request for mediation shall be made in writing, delivered to the other party to the Contract, and filed with the person or entity administering the mediation. The request may be made concurrently with the filing of binding dispute resolution proceedings but, in such event, mediation shall proceed in advance of binding dispute resolution proceedings, which shall be stayed pending mediation for a period of 60 days from the date of filing, unless stayed for a longer period by agreement of the parties or court order. If an arbitration is stayed pursuant to this Section 15.3.2, the parties may nonetheless proceed to the selection of the arbitrator(s) and agree upon a schedule for later proceedings.

§ 15.3.3 The parties shall share the mediator's fee and any filing fees equally. The mediation shall be held in the place where the Project is located, unless another location is mutually agreed upon. Agreements reached in mediation shall be enforceable as settlement agreements in any court having jurisdiction thereof.

§ 15.4 ARBITRATION

§ 15.4.1 If the parties have selected arbitration as the method for binding dispute resolution in the Agreement, any Claim subject to, but not resolved by, mediation shall be subject to arbitration which, unless the parties mutually

AIA Document A201™ – 2007. Copyright © 1911, 1915, 1918, 1925, 1937, 1951, 1958, 1961, 1963, 1966, 1970, 1976, 1987, 1997 and 2007 by The American Institute of Architects. All rights reserved. **WARNING:** This AIA® Document is protected by U.S. Copyright Law and International Treaties. Unauthorized reproduction or distribution of this AIA® Document, or any portion of it, may result in severe civil and criminal penalties, and will be prosecuted to the maximum extent possible under the law. This draft was produced by AIA software at 13:27:21 on 10/31/2013 under Order No.4888000083_1 which expires on 02/17/2014, and is not for resale. User Notes: (1198933826)

agree otherwise, shall be administered by the American Arbitration Association in accordance with its Construction Industry Arbitration Rules in effect on the date of the Agreement. A demand for arbitration shall be made in writing, delivered to the other party to the Contract, and filed with the person or entity administering the arbitration. The party filing a notice of demand for arbitration must assert in the demand all Claims then known to that party on which arbitration is permitted to be demanded.

§ 15.4.1.1 A demand for arbitration shall be made no earlier than concurrently with the filing of a request for mediation, but in no event shall it be made after the date when the institution of legal or equitable proceedings based on the Claim would be barred by the applicable statute of limitations. For statute of limitations purposes, receipt of a written demand for arbitration by the person or entity administering the arbitration shall constitute the institution of legal or equitable proceedings based on the Claim.

§ 15.4.2 The award rendered by the arbitrator or arbitrators shall be final, and judgment may be entered upon it in accordance with applicable law in any court having jurisdiction thereof.

§ 15.4.3 The foregoing agreement to arbitrate and other agreements to arbitrate with an additional person or entity duly consented to by parties to the Agreement shall be specifically enforceable under applicable law in any court having jurisdiction thereof.

§ 15.4.4 CONSOLIDATION OR JOINDER

§ 15.4.4.1 Either party, at its sole discretion, may consolidate an arbitration conducted under this Agreement with any other arbitration to which it is a party provided that (1) the arbitration agreement governing the other arbitration permits consolidation, (2) the arbitrations to be consolidated substantially involve common questions of law or fact, and (3) the arbitrations employ materially similar procedural rules and methods for selecting arbitrator(s).

§ 15.4.4.2 Either party, at its sole discretion, may include by joinder persons or entities substantially involved in a common question of law or fact whose presence is required if complete relief is to be accorded in arbitration, provided that the party sought to be joined consents in writing to such joinder. Consent to arbitration involving an additional person or entity shall not constitute consent to arbitration of any claim, dispute or other matter in question not described in the written consent.

§ 15.4.4.3 The Owner and Contractor grant to any person or entity made a party to an arbitration conducted under this Section 15.4, whether by joinder or consolidation, the same rights of joinder and consolidation as the Owner and Contractor under this Agreement.

END SECTION AIA A201

AIA Document A201™ – 2007. Copyright © 1911, 1915, 1918, 1925, 1937, 1951, 1958, 1961, 1963, 1966, 1970, 1976, 1987, 1997 and 2007 by The American Institute of Architects. All rights reserved. **WARNING:** This AIA® Document is protected by U.S. Copyright Law and International Treaties. Unauthorized reproduction or distribution of this AIA® Document, or any portion of it, may result in severe civil and criminal penalties, and will be prosecuted to the maximum extent possible under the law. This draft was produced by AIA software at 13:27:21 on 10/31/2013 under Order No.4888000083_1 which expires on 02/17/2014, and is not for resale. User Notes: (1198933826)

12.1 – Addendum To General Conditions – AIA Document A201

GENERAL CONDITIONS

A. Standard Form: The General Conditions of the Contract forming a part of the Contract Documents and of these Specifications, consists of AIA Document A201, 2007 Edition.

B. Modifications and Additions: Where Contract Documents refer to General Conditions, such reference shall be interpreted to include Addendum to General Conditions.

C. Where contract documents refer to “architect”, such reference shall be interpreted to be “Owner’s Representative”.

CORRELATION AND INTENT OF THE CONTRACT DOCUMENTS

A. If conflicts or discrepancies occur in the Contract Documents, interpretations will be based on the following priorities:

1. Awarding Authority-Contractor Agreement.
2. Addenda, with those of later date having precedence over those of earlier date.
3. The Supplementary Conditions.
4. The General Conditions of the Contract for Construction.
5. Drawings and Specifications.

B. For an inconsistency between Drawings and Specifications or within either Document not clarified by Addendum, the better quality or greater quantity of work shall be provided according to the Architect's interpretation.

ARTICLE 2 - OWNER

Sub-paragraph 2.1.2- delete in its entirety

ARTICLE 7 – CHANGES IN THE WORK

Sub-paragraph 7.3.4- delete in its entirety

ARTICLE 11 – INSURANCE AND BONDS

Sub-paragraph 11.3- delete in its entirety.

13 – Supplementary Conditions

100.0 CLAIMS FOR EXTRA COST

100.1 If the Contractor claims that any instructions by Drawings or otherwise involve extra cost or extension of time, they shall, within ten (10) days after the receipt of such instructions, and in any event before proceeding to execute the work, submit their protest thereto in writing to the Owner stating clearly and in detail the basis of his objections. No such claim will be considered unless so made.

100.2 Claims for additional compensation for extra work, due to alleged errors in ground elevations, contour lines, site location, or bench marks, will not be recognized unless accompanied by certified survey data, made prior to the time the original ground was disturbed, clearly showing that errors exist which resulted, or would result, in handling more material or performing more work than would be reasonably estimated from the Drawings and map issued.

100.3 Any discrepancies which may be discovered between actual conditions and those represented by the Drawings and maps shall at once be reported to the Owner and work shall not proceed except at the Contractor's risk, until written instructions have been received by them from the Owner.

100.4 If, on the basis of the available evidence, the Owner determines that an adjustment of the Contract Price and/or Time is justifiable, the procedure shall be as provided in Section 110 hereof.

101.0 TERMINATION, DELAYS, AND LIQUIDATED DAMAGES

101.1 Termination of Contract. If the Contractor refuses or fails to prosecute the work with such diligence as will insure its completion within the time specified in these Contract Documents, or as modified as provided in these Contract Documents, the Owner by written notice to the Contractor, may terminate the Contractor's right to proceed with the work. Upon such termination, the Owner may take over the work and prosecute the same to completion of the work and the Contractor shall also be liable to the Owner in its completion of the work and the Contractor shall also be liable to the Owner for liquidated damages for any delay in the completion of the work as provided below. If the Contractor's right to proceed is so terminated, the Owner may take possession of and utilize in completing the work, such materials, tools, equipment, and plant as may be on the site of the work and necessary therefore.

101.2 Liquidated Damages for Delays. If the work be not completed within the time stipulated in Section 402 hereof, including any extensions of time for excusable delays as herein provided, the Contractor shall pay to the Owner as fixed, agreed, and liquidated damages (it being impossible to determine the actual damages occasioned by the delay) for each calendar day of delay, until the work is completed, the amount as set forth in Section 403 hereof and the Contractor and his sureties shall be liable to the Owner for the amount thereof.

101.3 Excusable Delays. The right of the Contractor to proceed shall not be terminated nor shall the Contractor be charged with liquidated damages for any delays in the completion of the work due.

101.3.1 To any acts of the Government, including controls or restrictions upon or requisitioning of materials, equipment, tools, or labor by reason of war, National Defense, or any other national emergency.

101.3.2 To any acts of the Owner.

101.3.3 To causes not reasonably foreseeable by the parties to this Contract at the time of the execution of the Contract which are beyond the control and without the fault or negligence of the Contractor, including, but not restricted to, acts of God or of the Public enemy, acts of another Contractor in the performance of some other contract with the Owner, fires, floods, epidemics, quarantine, restrictions, strikes, freight embargoes, and weather of unusual severity such as hurricane, tornadoes, cyclones and other extreme weather conditions; and

101.3.4 To any delay of any subcontractor occasioned by any of the causes specified in subparagraphs 1, 2 and 3 of this paragraph 101.3.

Provided, however, that the Contractor promptly notify the Owner within ten (10) days in writing of the cause of the delay. Upon receipt of such notification, the Owner shall ascertain the facts and the cause and extent of delay. If, upon the basis of the facts and the terms of this contract, the delay is properly excusable, the Owner shall extend the time for completing the work for a period of time commensurate with the period of excusable delay.

102 SAMPLES, CERTIFICATES AND TESTS

102.1 The Contractor shall submit all material or equipment samples, certificates, affidavits, etc. as called for in the contract documents or required by the Owner promptly after award of the Contract and acceptance of the Contractor's bond. No such material or equipment shall be manufactured or delivered to the site, except at the Contractor's own risk, until the required samples or certificates have been approved in writing by the Owner. Any delay in the work caused by late or improper submission of samples or certificates for approval shall not be considered just cause for an extension of the contract time.

Each sample submitted by the Contractor shall carry a label giving the name of the Contractor, the property for which it is intended, and the name of the producer. The accompanying certificate or letter from the Contractor shall state that the sample complies with contract requirements, shall give the name and brand of the products, its place or origin, the name and address of the producer and all specifications or other detailed information which will assist the Owner in passing upon the acceptability of the sample promptly. It shall also include the statement that all materials or equipment furnished for use in the project will comply with the samples and/or certified statements.

102.2 Approval of any materials shall be general only and shall not constitute a waiver of the Owner's right to demand full compliance with Contract requirements. After actual deliveries, the Owner will have such check tests made as they deem necessary in each instance and may reject materials and equipment and accessories for cause, even though such materials and articles have been given general approval. If materials, equipment or accessories, which fail to meet check tests have been incorporated in the work, the Owner will have the right to cause their removal and replacement by proper materials or to demand and secure such reparation by the Contractor as is equitable.

102.3 Except as otherwise specifically stated in the Contract, the costs of sampling and testing will be divided as follows:

102.3.1 The Contractor shall furnish without extra cost, including packing and delivery charges, all samples required for testing purposes except those samples taken on the project by the Owner;

102.3.2. The Contractor shall assume all costs of re-testing materials which fail to meet contract requirements;

102.3.3 The Contractor shall assure all cost of testing materials offered in substitution of those found deficient; and

102.3.4 The Owner will pay all other expenses.

103.0 PERMITS AND CODES

103.1 The Contractor shall give all notices required by and comply with all applicable laws, ordinances, and codes of the Local Government. All construction work and/or utility installations shall comply with all applicable ordinances, and codes including all written waivers. Before installing any work, the Contractor shall examine the Drawings and Technical Specifications for compliance with applicable ordinances and codes and shall immediately report any discrepancy to the Owner. Where the requirements of the Drawings and Technical Specifications fail to comply with such applicable ordinances or codes, the

Owner will adjust the Contract by Change Order to conform to such ordinances or codes (unless waivers in writing covering the difference have been granted by the governing body or department) and make appropriate adjustment in the Contract Price or stipulated unit prices.

Should the Contractor fail to observe the foregoing provisions and proceed with the construction and/or install any utility at the variance with any applicable ordinance or code, including any written waivers (notwithstanding the fact that such installation is in compliance with the Drawings and Technical Specifications), the Contractor shall remove such work without cost to the Owner, but a Change Order will be issued to cover only the excess cost the Contractor would have been entitled to receive if the Change had been made before the Contractor commenced work on the items involved.

103.2 The Contractor shall at their own expense, secure and pay to the appropriate department of the Local Government the fees or charges for all permits for street pavement, sidewalks, sheds, removal of abandoned water taps, sealing of house connection drains, pavement cuts, buildings, electrical, plumbing, water, gas and sewer permits required by the local regulatory body or any of its agencies.

103.3 The Contractor shall comply with applicable local laws and ordinances governing excavations and the disposal of surplus excavation, materials, debris and rubbish on or off the Project Area and commit no trespass on any public or private property in any operation due to or connected with the Improvements embraced in this Contract.

104.0 CARE OF WORK

104.1 The Contractor shall be responsible for all damages to person or property that occur as a result of their fault or negligence in connection with the prosecution of the work and shall be responsible for the proper care and protection of all materials delivered and work performed until completion and final acceptance, whether or not the same has been covered in whole or in part by payments made by the Owner.

104.2 The Contractor shall provide, where necessary and as requested by the Owner,

sufficient competent watchmen, both day and night, including Saturdays, Sundays, and holidays, from the time the work is commenced until final completion and acceptance.

104.3 In an emergency affecting and safety of life, limb or property, including adjoining property, the Contractor without special instructions or authorization from the Owner is authorized to act at their discretion to prevent such threatened loss or injury, and they shall so act. They shall likewise act if instructed to do so by the Owner. Any compensation claimed by the Contractor on account of such emergency work will be determined by the Owner as provided in Section 110 hereof.

104.4 The Contractor shall avoid damage as a result of their operations to existing sidewalks, streets, curbs, pavements, utilities, (except those which are to be replaced or removed), adjoining property, etc., and they shall at their own expense completely repair any damage thereto caused by their operations.

104.5 The Contractor shall shore up, brace, underpin, secure, and protect as may be necessary, all foundations and other parts of existing structures adjacent to, adjoining, and in the vicinity of the site, which may be in any way affected by the excavations or other operations connected with the construction of the Improvements embraced in this Contract. The Contractor shall be responsible for the giving of any and all required notices to any adjoining or adjacent property Owner or other party before the commencement of any work. The Contractor shall indemnify and save harmless the Owner from any damages on account of settlements or the loss of lateral support of adjoining property and from all loss or expense and all damages for which the Owner may become liable in consequence of such injury of damage to adjoining and adjacent structures and their premises.

105.0 ACCIDENT PREVENTION

105.1 The Contractor shall exercise proper precaution at all times for the protection of persons and property and shall be responsible for all damages to persons or property, either on or off the site, which occur as a result of his prosecution of the work. The safety provisions of applicable laws and building and construction codes shall be observed and the Contractor shall take or cause to be taken such additional safety and health measures as the Owner may determine to be reasonably necessary. Machinery, equipment and all hazards shall be guarded in accordance with the safety provisions of the “Manual of Accident prevention in Construction” published by the Associates General Contractors of America, Inc., to the extent that such provisions are not in conflict with applicable local laws.

105.2 The Contractor shall maintain an accurate record of all cases of death, occupational disease, or injury requiring medical attention or causing loss of time from work, arising out of and in the course of employment on work under the Contract. The Contractor shall promptly furnish the Owner with reports concerning these matters.

105.3 The Contractor shall indemnify and save harmless the Owner from any claims for damages resulting from property damage, personal injury and/or death suffered or alleged to have been suffered by any person as a result of any work conducted under this Contract.

106.0 USE OF PREMISES

106.1 The Contractor shall confine their equipment, storage of materials and construction operations to the Contract limits as shown on the Drawings and as prescribed by ordinances or permits, or as may be desired by the Owner and shall not unreasonably encumber the site or public rights of way with his materials and construction equipment.

106.2 The Contractor shall comply with all reasonable instructions of the Owner and the ordinances and codes of the Local Government, regarding signs, advertising, traffic, fires, explosives, danger signals, barricades and fire prevention.

107.0 REMOVAL OF DEBRIS, CLEANING, ETC.

The Contractor shall, periodically or as directed during the progress of the work, remove and legally dispose of all surplus excavated material and debris, and keep the Project Area and public rights of way reasonably clear. Upon completion of the work, the Contractor shall remove all temporary construction facilities, debris and unused materials provided for the work, and put the work site of the work and public rights of way in a neat and clean condition. Trash burning on the site of the work will be subject to prior approval of the Owner and existing State and Local regulations.

108.0 INSPECTION

108.1 All materials and workmanship shall be subject to inspection, examination, or test by the Owner and the Engineer at any and all times during manufacture of construction and at any and all places where such manufacture or construction is carried on. The Owner shall have the right to reject defective material and workmanship or require its correction. Unacceptable workmanship shall be satisfactorily corrected. Rejected material shall be promptly segregated and removed from the Project Area and replaced with material or specified quality without charge therefore. If the Contractor fails to proceed at once with correction of rejected workmanship or defective material, the Owner may by Contract or otherwise have the defects remedied or rejected materials removed from the Project Area and charge the cost of the same against any monies which may be due the Contractor, without prejudice to any other rights or remedies of the Owner.

108.2 The Contractor shall furnish promptly all materials reasonably necessary for any tests, which may be required. (See Section 102 hereof). All tests by the Owner will be performed in such manner as not to delay the work unnecessarily and will be made in accordance with the provisions of the Technical Specifications.

108.3 The Contractor shall notify the Owner sufficiently in advance of backfilling or concealing any facilities to permit proper inspection. If any facilities are concealed without approval or consent of the Owner, the Contractor shall uncover for inspection and recover such facilities all at their own expense, when so requested by the Owner.

Should it be considered necessary or advisable by the Owner at any time before final acceptance of the entire work to make an examination of work already completed by uncovering the same, the Contractor shall on request promptly furnish all necessary facilities, labor, and material. If such work is found to be defective in any important or essential respect, due to fault of the Contractor or their subcontractors, the Contractor shall defray all the expenses of such examination and of satisfactory reconstruction. If, however, such work is found to meet the requirements of the Contract, the actual cost of labor and material necessarily involved in the examination and replacement, plus 15 percent of such costs to cover superintendence, general expenses and profit, shall be allowed by the Contractor and they shall, in addition, if completion of the work of the entire Contract has been delayed thereby, be granted a suitable extension of time on account of the additional work involved.

108.4 Inspection of materials and appurtenances to be incorporated in the Improvements embraced in this Contract may be made at the place of production, manufacture of shipment, whatever the quantity justifies it, and such inspection and acceptance, unless otherwise stated in the Technical Specifications, shall be final, except as regards (1) latent

defects, (2) departures from specific requirements of the Contract, (3) damage or loss in transit, or (4) fraud or such gross mistakes as amount to fraud. Subject to the requirements contained in the preceding sentence, the inspection of materials as a whole or in part will be made at the Project Site.

108.5 Neither inspection, testing, approval nor acceptance of the work in whole or in part, by the Owner or its agents shall relieve the Contractor of their sureties of full responsibility for materials furnished or work performed not in strict accordance with the Contract.

109.0 REVIEW BY THE OWNER

The Owner, its authorized representatives and agents and the Representative for the Secretary (as defined under GENERAL CONDITIONS, PART II) shall, at all times, have access to, and be permitted to observe and review all work, materials, equipment, payrolls, personnel records, employment conditions, material invoices, and other relevant data and records pertaining to this Contract, provided, however, that all instructions and approval with respect to the work will be given to the Contractor only by the Owner through its authorized representatives or agents.

110.0 FINAL INSPECTION

110.1 When the Improvements embraced in this Contract are substantially completed, the Contractor shall notify the Owner in writing that the work will be ready for final inspection on a definite date, which shall be stated in the notice. The notice will be given at least ten (10) days prior to the date stated for final inspection, and bear the signed concurrence of the representative of the Owner having charge of inspection. If the Owner determines that the status of the Improvements is as represented, it will make the arrangements necessary to have final inspection commenced on the date stated in the notice, or as soon thereafter as is practicable. The inspection party will include representatives of each department of the Local Government having in charge Improvements of like character when such Improvements are later to be accepted by the Local Government.

111.0 DEDUCTION FOR UNCORRECTED WORK

If the Owner deems it not expedient to require the Contractor to correct work not done in accordance with the Contract Documents, an equitable deduction from the Contract Price will be made by agreement between the Contractor and the Owner and subject to settlement, in case of dispute, as herein provided.

112.0 INSURANCE

See Section 5.0 Insurance for information.

113.0 PATENTS

The Contractor shall hold and save the Owner its officers, and employees, harmless from liability of any nature of kind, including costs and expenses, for, or on account of, any patented or unpatented invention, process, article, or appliance manufactured or used in the performance of the Contract, including its use by the Owner unless otherwise specifically stipulated in the Technical Specifications.

114.0 WARRANTY OF TITLE

No material, supplies, or equipment to be installed or furnished under this Contract shall be purchased subject to any chattel mortgage or under a conditioned sale, lease-purchase or other agreement by which an interest therein or in any part thereof is retained by the seller or supplier.

The Contractor shall warrant good title to all materials, supplies, and equipment installed or incorporated in the work and upon completion of all work, shall deliver the same together with all improvements and appurtenances constructed or placed thereon by them to the Owner free from any claims, liens, or charges. Neither the Contractor nor any person, firm or corporation furnishing any material or labor for any work covered by this Contract shall have any right to a lien upon any improvement or appurtenance thereon. Nothing contained in this paragraph, however, shall defeat or impair the right of persons furnishing materials or labor to recover under any bond given by the Contractor for their protection or any rights under any law permitting such persons to look to funds due the Contractor in the hands of the Owner. The provisions of this paragraph shall be inserted in all subcontracts and materials contracts and notice of its provisions shall be given to all persons furnishing materials for the work when no formal Contract is entered into for such materials.

115.0 GENERAL GUARANTY

Neither the final certificate of payment nor any provision in the Contract nor partial or entire use of the Improvements embraced in this Contract by the Owner or the public shall constitute an acceptance of work not done in accordance with the Contract or relieve the Contractor of liability in respect to any express warranties or responsibility for faulty materials or workmanship. The Contractor shall promptly remedy any defects in the work and pay for any damage to other work resulting therefrom, which shall appear within a period of twelve (12) months from the date of final acceptance of the work. The Owner will give notice of defective materials and work with reasonable promptness.

116.0 CONTRACTOR TO MAKE OWN EXAMINATION

Plans, calculations, estimates of quantities, and any statements made in the Instructions to Bidders or otherwise as to the conditions under which the work is to be performed are not guaranteed by the Owner to be correct or to be a complete representation of all existing data on conditions affecting work, and the Contractor agrees that they have made their examination and will make no claim for damages on account of any errors, inaccuracies or omissions that may be found.

The Contractor shall not take any advantage or have any claim for damages on account of any discrepancy, error or omission in any plans, calculations, estimates of quantities, or any statement made in the Instructions to Bidders or otherwise as to the conditions under which the work is to be performed, and they shall report such discrepancy, error or omission to the Owner in writing as soon as it comes to their knowledge, and before proceeding with work related to such discrepancy, error or omission. Any correction or modification of the plans or specifications may be made by the Owner when necessary, in their opinion, for the proper fulfillment of their purpose or for their proper interpretation.

200.0 (OMITTED)
300.0 (OMITTED)

402.0 TIME FOR COMPLETION

The work which the Contractor is required to perform under this Contract shall be commenced at the time stipulated by the Owner in the Notice to Proceed to the Contractor.

The rate of progress shall be such that the whole work shall be performed in accordance with the terms of this contract within the number of calendar days after the date of execution of the contract as herein stipulated, unless the expected as any part may be delayed under the provisions of this contract. The work shall be pursued in a continuous, diligent, and uniform manner throughout the project until completion.

It is agreed that the rates of progress herein required has been purposely made low enough to allow for the ordinary delays incident to construction work of this character. No extension of time will be made for ordinary delays, inclement weather and accidents, and the occurrence of such will not relieve the Contractor from the necessity of maintaining this rate of progress.

If delays are caused by acts of God, acts of Government or State, strikes extra work, floods or other contingencies clearly beyond the control or responsibility of the Contractor, the Contractor shall be entitled to so much additional time wherein to perform and complete this contract on his part as the Engineer shall certify in writing to be just.

403.0 LIQUIDATED DAMAGES

In case the Contractor fails satisfactorily to complete the entire work contemplated and provided for under this contract on or before the date of completion determined as described above, the Owner shall deduct from the payments due to the Contractor each month the sum of $200.00 for each calendar day (Sundays and legal holidays excluded) of delay, which sum is agreed upon not as a penalty, but as fixed and liquidated damages, said damages shall be deducted from any other moneys due or to become due the Contractor, and in case such damages exceed the amount of all moneys due or to become due, the Contractor then the Contractor or his Surety shall pay the balance to the Owner.

404.0 RESPONSIBILITIES OF CONTRACTOR

404.1 Except as otherwise specifically stated in the Contract Documents, and Technical Specifications, the Contract shall provide and pay for all materials, tools, labor, equipment, water, light, heat, power, transportation, superintendence, temporary construction of every nature, charges, levies, fee or other expenses, and all other services and facilities of every nature whatsoever necessary for the performance of the Contract and to deliver all improvements embraced in this Contract complete in every respect within the specified time.

404.2 All materials, workmanship, methods and practices shall conform to the current Standards of the American Water Works Association, the Rhode Island Standard Specifications for Road and Bridge Construction, 2010 edition, including all corrections, all issued compilation of approved specifications, and addendum to date and all general requirements and special requirements contained in this project specifications. All work zone traffic control shall be in accordance with the manual on uniform traffic control devices, 2009 edition.

404.3 The Contractor shall be responsible for detailed layout, all stakeout and grade control, and shall employ a registered engineer or a registered land surveyor for this purpose as may be necessary. The Owner will provide engineering and inspection.

404.4 The Contractor shall verify dimensions shown on the plans and if any inconsistencies or discrepancies should be noted on the Drawings and the Specifications, he/she shall immediately notify the Owner. The Contractor will be held responsible for any errors resulting from his/her failure to exercise the aforementioned precaution.

404.5 As soon as the Contract is executed, the Contractor shall order any materials necessary and not supplied by the Owner, submit construction schedules as hereinafter specified, and otherwise anticipate the Notice to Proceed. When the Owner gives the Notice to Proceed, the work of construction shall begin at the time stipulated therein and shall be completed within the Time for Completion specified.

404.6 It is the Contractor's responsibility to make his/her own investigation and related assumptions and to satisfy himself as to subsurface conditions and to insure that these are reflected in the prices bid. No change or extra to the price will be accepted due to subsurface conditions or utility locations.

The determination of location and subsequent maintenance and protection of existing subsurface and above ground utilities are the sole responsibility of the Contractor; claims resulting from damage to such by the Contractor will be settled by the Contractor at his/her expense in accordance with the Contract.

404.7 The Contractor shall, at his/her own expense, take out all necessary permits from the county, municipal, or other public authorities; shall give all notices required by law or ordinances; and shall post all bonds and pay all fees and charges incident to the due and lawful prosecution of the work covered by this Contract.

404.8 RESPONSIBILITY FOR MATERIAL FURNISHED BY OWNER: The Contractor's responsibility for material furnished by the Owner shall begin upon Contractor's acceptance at the point of delivery to him. All such material shall be examined, and material defective in manufacture and/or otherwise damaged shall be rejected by the Contractor at the time and place of delivery to him and replaced by the Owner. Material furnished by the Owner which is accepted by the Contractor, but is discovered prior to final acceptance of the work, (1) to be defective in manufacture, shall be replaced by the Owner; (2) to have been damaged before or after acceptance by the Contractor, shall be replaced by the Contractor. Once accepted by the Contractor at the point of delivery to him, all defective and/or damaged material discovered prior to final acceptance of the work shall be removed by the Contractor and he shall install, at his own expense, the material replaced, in its stead, by the Owner or Contractor. In such case, the Contractor shall furnish all labor, equipment, and material incidental to replacement and necessary for the completion of the work to the satisfaction of the Engineer.

404.9 RESPONSIBILITY FOR SAFE STORAGE: The Contractor shall be responsible for the safe storage of all material furnished to or by him and accepted by him until it has been incorporated in the completed project.

405.0 COMMUNICATIONS

405.1 All notices, demands, requests, instructions, approvals, proposals and claims must be in writing.

405.2 Any notice to or demand upon the Contractor shall be sufficiently given if delivered at the office of the Contractor stated on the signature page of the Agreement (or at such other offices as the Contractor may from time to time designate in writing to the Owner), or if deposited in the United States mail in a sealed, postage-prepaid envelope, or delivered with charges prepaid to any telegraph company for translation, in each case addressed to such office.

405.3 All papers; required to be delivered to the Owner shall, unless otherwise specified in writing to the Contractor, be delivered to the CITY OF PAWTUCKET, DEPARTMENT OF PUBLIC WORKS, 250 Armistice Boulevard, Pawtucket, Rhode Island, 02860; any notice to or demands upon the Owner shall be sufficiently given if so delivered, or if deposited in the United States mail in a sealed, postage-prepaid envelope, or delivered with charges prepaid to any telegraph company for transmission to said Owner at such address, or to such other representative of the Owner or to such other address, as the Owner may subsequently specify in writing to the Contractor for such purpose.

405.4 Any such notice shall be deemed to have been given as of the time of actual delivery or (in the case of mailing when the same should have been received in due course of post, or in the case of telegram) at the time of actual receipt, as the case may be.

406.0 PARTIAL USE OF SITE IMPROVEMENTS

The Owner, at its elections may give notice to the Contractor and place in use those sections of the improvements which have been completed, inspected, and can be accepted as complying with the Technical Specifications and if in its opinion, each such section is reasonably safe, fit and convenient, for the use and accommodation for which it was intended, provided;

406.1 The use of such sections of the Improvements shall in no way impede the completion of the remainder of the work by the Contractor.

406.2 The Contractor shall not be responsible for any damages or maintenance costs due directly to the use of such sections.

406.3 The use of such sections shall in no way relieve the Contractor or his liability due to having used defective materials or to poor workmanship.

406.4 The period of guarantee shall not begin to run until the date of the final acceptance of all work which the Contractor is required to construct under this Contract.

407.0 (OMITTED)

408.0 (OMITTED)

409.0 (OMITTED)

410.0 INTOXICATING LIQUORS

The Contractor shall not sell and shall neither permit or suffer the introduction or use of intoxicating liquors upon or about the work embraced in this contract.

411.0 ACCESS TO WORK

The Owner and the Engineer, and their agents and employees may, for purposes already specified and for any other purpose, enter upon the work and the premises used by the Contractor, and the Contractor shall provide safe and proper facilities therefor.

412.0 TIME OF BEGINNING WORK

412.1 Except as herein provided, the Contractor shall commence work at such points as the Engineer may approve, within ten (10) days after the execution of this contract by the Owner.

412.2 Such time of starting may be postponed by written agreement between the Owner and the Contractor because of expected delays in receipt of materials and equipment, or if the season be unsuitable for commencement of the work, or because of other contingency clearly beyond the control or responsibility of the Contractor. Unless stipulated otherwise in said agreement, the Contractor shall commence work at such points as the Engineer may direct or approve, within 10 days after the receipt of a written order from the Owner to start work.

413.0 PROVISIONS FOR TRAFFIC

413.1 The Contractor shall not close or obstruct any portion of a street without obtaining permits for from the proper municipal authorities. If any street or private way shall be rendered unsafe by the Contractor's operations, he shall make such repairs or provide such temporary ways or guards as shall be acceptable to the Owner.

413.2 Streets, roads, private ways, and walks shall be maintained passable by the Contractor at his expense, and the Contractor shall assume full responsibility for the adequacy and safety of provisions made. He shall conduct his construction operations such that interference with the flow of traffic will be held to a minimum.

413.3 The Contractor shall cooperate in every way possible with the municipal authorities maintaining a flow of traffic through the site. The Contractor shall notify the Pawtucket Police Department when vehicular traffic on any street must be diverted regardless of the length of time or time of day.

413.4 All detours shall be signed and lighted as directed by the City of Pawtucket.

414.0 COORDINATION WITH OUTSIDE PARTIES

414.1 The Contractor shall conduct his work so as to interfere as little as possible with private business and public travel. He shall at his own expense, wherever necessary or required, maintain fences, furnish watchmen, maintain lights and take such other precautions as may be necessary to protect life and property.

414.2 The Contractor shall take all responsibility for the protection of the work and for preventing injuries to persons and damage to property and utilities on or about the work. He shall not be relieved of his responsibility by any right of the City to give permission or issue orders relating to any part of the work, or by any such permission given or orders issued, or by failure of the Engineer to give such permission or issue such orders. The Contractor shall bear all losses resulting to him or to the Owner on account of the amount of character of the work, or because nature of the land in or on which the work is done is different from what was estimated or expected, or on account of the weather, elements or other causes. The Contractor shall assume the defense of all claims or whatsoever character against the Contractor of the Owner, and indemnify, save harmless and insure the Owner, its officers or agents, against all claims arising out of injury or damage to persons, corporation, or property, whether said claims are for unavoidable damage or not, and from all claims relating to labor and materials furnished for the work. The Contractor shall not be required to indemnify the Owner against damage or claims occasioned by acts of the Owner, except otherwise provided in the articles relative to patents and responsibilities.

415.0 DELAY BY OWNER

The Owner may delay the beginning of the work or any part thereof, if the necessary lands or rights-of-way, or materials for such work shall not have been obtained. The Contractor shall have no claim for damages on account of such delay, but shall be entitled to so much additional time wherein to perform and complete this contract on his part as the City shall certify in writing to be just.

416.0 (OMITTED)

417.0 PROVISIONS REQUIRED BY LAW DEEMED INSERTED

Each and every provision of law and clause required by law to be inserted in this contract shall be deemed to be inserted herein and the contract shall be read and enforced as though it were included herein, and if through mistake or otherwise any such provision is not inserted, or is not

correctly inserted, then upon the application of either party, the contract shall forthwith be physically amended to make such insertion.

418.0 SAFETY AND HEALTH REGULATIONS

These construction documents, and the joint and several phases of construction hereby contemplated are to be governed, at all times by applicable provisions of the Federal law(s), including but not limited to, the latest amendments of the following:

(1) Williams-Steiger Occupational Safety and Health Act of 1970, Public Law 91-596;

(2) Part 1910 - Occupation Safety and Health Standards, Chapter XVII of Title 29, Code of Federal Regulations;

(3) Part 1518 - Safety and Health Regulations for Construction, Chapter XIII of Title 29, Code of Federal Regulations.

In the event of any inconsistencies between the above laws and regulations and the provisions of these documents, the laws and regulations shall prevail.

419.0 NOTIFICATION OF EXCAVATION TO UTILITIES

The Contractor shall provide a minimum of two working days notice to "Dig Safe" (1-800-225-4977) and any other appropriate utility before the Contractor begins excavation.

Appendix A

ANTI-KICKBACK ACKNOWLEDGMENT

ALL BIDDERS/OFFERORS MUST ATTEST TO THE FOLLOWING:

The vendor acknowledges, under the pains and penalties of perjury, that he/she has not been offered, paid, or solicited for any contribution or compensation, nor has he/she been granted a gift, gratuity, or other consideration, either directly or indirectly by any officer, employee or member of the governing body of the City of Pawtucket who exercises any functions or responsibilities in connection with either the award or execution of the project to which this contract pertains.

Further, the vendor acknowledges, under the pains and penalties of perjury, that he/she has not offered, paid, or solicited by way of any contribution or compensation, nor has he/she granted a gift, gratuity or other consideration either directly or indirectly to any officer, employee, or member of the governing body of the City of Pawtucket who exercises any functions or responsibilities in connection with either the award or execution of the project to which this project or contract pertains.

_____ _____

SIGNATURE OF OFFEROR DATE

_____

TITLE

_____

COMPANY

Title of RFP:

_____

Appendix B

CITY OF PAWTUCKET
GENERAL TERMS AND CONDITIONS OF PURCHASE

Preamble

The City of Pawtucket's Purchasing Office may, from time to time, make amendments to the General Terms and Conditions when the City of Pawtucket's Purchasing Agent determines that such amendments are in the best interest of the City of Pawtucket. Amendments shall be made available for public inspection at the Purchasing Office located in Pawtucket City Hall but shall not require formal public notice and hearing. Copies of the Terms and Conditions shall be provided to any individual or firm requesting them.

CITY OF PAWTUCKET'S PURCHASING OFFICE GENERAL CONDITIONS OF PURCHASE

All City of Pawtucket purchase orders, contracts, solicitations, delivery orders and service requests shall incorporate and be subject to the provisions of Rhode Island General Laws 8-15-4 and the City of Pawtucket purchasing rules and regulations adopted pursuant thereto, all other applicable provisions of the Rhode Island General Laws, the Pawtucket City Charter, specific requirements described in the Request or Contract, and the following General Conditions of Purchase:

1. GENERAL

   All purchase orders, contracts, solicitations, delivery orders, and service requests are for specified goods and services, in accordance with express terms and conditions of purchase, as defined herein. For the purposes of this document, the terms "bidder" and "contractor" refer to any individual, firm, corporation, or other entity presenting a proposal indicating a desire to enter into contracts with the City of Pawtucket, or with whom a contract is executed by the City of Pawtucket's Purchasing Agent, and the term "contractor" shall have the same meaning as "vendor".

2. ENTIRE AGREEMENT

   The City of Pawtucket's Purchase Order, or other City of Pawtucket contract endorsed by the City of Pawtucket Purchasing Office, shall constitute the entire and exclusive agreement between the City of Pawtucket and any contractor receiving an award. In the event any conflict between the bidder's standard terms of sale, these conditions or more specific provisions contained in the solicitation shall govern.

   All communication between the City of Pawtucket and any contractor pertaining to any award or contract shall be accomplished in writing.

   a. Each proposal will be received with the understanding that the acceptance, in writing, by contract or Purchase Order by the City of Pawtucket Purchasing Agent of the offer to do work or to furnish any or all the materials, equipment, supplies or services described therein shall constitute a contract between the bidder and the City of Pawtucket. This shall bind the bidder on his part to furnish and deliver at the prices and in accordance with the conditions of said accepted proposal and detailed specifications and the City of Pawtucket on its part to order from such contractor (except in case of emergency) and to pay for at the agreed prices, all materials, equipment, supplies or services specified and delivered. A contract shall be deemed executory only to the extent of funds available for payment of the amounts shown on Purchase Orders issued by the City of Pawtucket to the contractors.

   b. No alterations or variations of the terms of the contract shall be valid or binding upon the City of Pawtucket unless submitted in writing and accepted by the City of Pawtucket Purchasing Agent. All orders and changes thereof must emanate from the City of Pawtucket Purchasing Office: no oral agreement or arrangement made by a contractor with a department or employee will be considered to be binding on the City of Pawtucket Purchasing Agent, and may be disregarded.

   c. Contracts will remain in force for the contract period specified or until all articles or services ordered before date of termination shall have been satisfactorily delivered or rendered and accepted and thereafter until all terms and conditions have been met, unless:

1. terminated prior to expiration date by satisfactory delivery against orders of entire quantities, or
2. extended upon written authorization of the City of Pawtucket Purchasing Agent and accepted by the contractor, to permit ordering of the unordered balances or additional quantities at the contract price and in accordance with the contract terms, or
3. canceled by the City of Pawtucket in accordance with other provisions stated herein.

d. It is mutually understood and agreed that the contractor shall not assign, transfer, convey, sublet or otherwise dispose of this contract or his right, title or interest therein, or his power to execute such contract, to any other person, company or corporation, without the previous consent, in writing, of the City of Pawtucket Purchasing Agent.

e. If, subsequent to the submission of an offer or issuance of a purchase order or execution of a contract, the bidder or contractor shall merge with or be acquired by another entity, the contract may be terminated, except as a corporate resolution prepared by the contractor and the new entity ratifying acceptance of the original bid or contract terms, condition, and pricing is submitted to the City of Pawtucket Purchasing Office, and expressly accepted.

f. The contractor or bidder further warrants by submission of an offer or acceptance of a purchase order or other contract that he has no knowledge at the time of such action of any outstanding and delinquent or otherwise unsettled debt owed by him to the City of Pawtucket, and agrees that later discovery by the City of Pawtucket Purchasing Agent that this warranty was given in spite of such knowledge, except where the matter is pending in hearing or from any appeal therefrom, shall form reasonable grounds for termination of the contract.

3. SUBCONTRACTS

No subcontracts or collateral agreements shall be permitted, except with the City of Pawtucket's express written consent. Upon request, contractors must submit to the City of Pawtucket Purchasing Office a list of all subcontractors to be employed in the performance of any Purchase Order or other contract arising from this Request.

4. RELATIONSHIP OF PARTIES

The contractor or bidder warrants, by submission of an offer or acceptance of a purchase order or other contract, that he is not an employee, agent, or servant of the City of Pawtucket, and that he is fully qualified and capable in all material regards to provide the specified goods and services. Nothing herein shall be construed as creating any contractual relationship or obligation between the City of Pawtucket and any sub-bidder, subcontractor, supplier, or employee of the contractor or offeror.

5. COSTS OF PREPARATION

All costs associated with the preparation, development, or submission of bids or other offers will be borne by the offeror. The City of Pawtucket will not reimburse any offeror for such costs.

6. SPECIFIED QUANTITY REQUIREMENT

Except where expressly specified to the contrary, all solicitations and contracts are predicated on a specified quantity of goods or services, or for a specified level of funding.

a. The City of Pawtucket reserves the right to modify the quantity, scope of service, date of delivery or completion, or funding of any contract, with no penalty or charge, by written notice to the contractor, except where alternate terms have been expressly made a part of the contract.

b. The City of Pawtucket shall not accept quantities in excess of the specified quantity except where the item is normally sold by weight (where sold by weight, the City of Pawtucket will not accept quantities greater than ten per cent [10%] of the specified quantity), or where the Request or Contract provides for awards for other than exact quantities.

c. Purchase Orders or other contracts may be increased in quantity or extended in term without subsequent solicit with the mutual consent of the contractor and the City of Pawtucket, where determined by the City of Pawtucket Purchasing Agent to be in the City of Pawtucket's best interest.

7. TERM AND RENEWAL

Where offers have been requested or contracts awarded for terms exceeding periods of twelve (12) months, it is mutually understood and agreed that the City of Pawtucket's commitment is limited to a base term not to exceed twelve (12) months, subject to renewal annually at the City of Pawtucket's sole option for successive terms as otherwise described, except where expressly specified to the contrary. Purchase orders appearing to commit to obligations of funding or terms of performance may be executed for administrative convenience, but are otherwise subject to this provision, and in such cases the City of Pawtucket's renewal shall be deemed to be automatic, conditional on the continued availability of appropriated funds for the purpose, except as written notice of the City of Pawtucket's intent not to renew is served.

8. DELIVERY/COMPLETION

Delivery must be made as ordered and/or projects completed in accordance with the proposal. If delivery qualifications do not appear on the bidder's proposal, it will be interpreted to mean that goods are in stock and that shipment will be made within seven (7) calendar days. If the project completion date is not specified in the proposal, the date shall be determined by the City of Pawtucket Purchasing Agent. The decision of the City of Pawtucket Purchasing Agent, as to reasonable compliance with the delivery terms, and date of completion shall be final. Burden of proof of delay in receipt of order shall rest with the contractor. No delivery charges shall be added to invoices except when authorized on the Purchase Order.

9. FOREIGN CORPORATIONS

In accordance with Title 7 Chapter 1.1 (“Business Corporations”) of the General Laws of Rhode Island, no foreign corporation shall have the right to transact business in this state until it shall have procured a certificate of authority so to do from the Secretary of State.

10. PRICING

All pricing offered or extended to the City of Pawtucket is considered to be firm and fixed unless expressly provided for to the contrary. All prices shall be quoted F.O.B. Destination with freight costs included in the unit cost to be paid by the City of Pawtucket, except, where the Request or Contract permits, offers reflecting F.O.B. Shipping Point will be considered, and freight costs may then be prepaid and added to the invoice.

11. COLLUSION

Bidder or contractor warrants that he has not, directly or indirectly, entered into any agreements or participated in any collusion or otherwise taken any action in restraint of full competitive bidding. In special circumstances, an executed affidavit will be required as a part of the bid.

12. PROHIBITION AGAINST CONTINGENT FEES AND GRATUITIES

Bidder or contractor warrants that he has not paid, and agrees not to pay, any bonus, commission, fee, or gratuity to any employee or official of the City of Pawtucket for the purpose of obtaining any contract or award issued by the City of Pawtucket. Bidder or contractor further warrants that no commission or other payment has been or will be received from or paid to any third party contingent on the award of any contract by the City of Pawtucket, except as shall have been expressly communicated to the City of Pawtucket Purchasing Agent in writing prior to acceptance of the contract or award in question. Subsequent discovery by the City of Pawtucket of non-compliance with these provisions shall constitute sufficient cause for immediate termination of all outstanding contracts and suspension or debarment of the bidder(s) or contractor(s) involved.

13. AWARDS

Awards will be made with reasonable promptness and by written notice to the successful bidder (only); bids are considered to be irrevocable for a period of ninety (90) days following the bid opening unless expressly provided for to the contrary in the Request, and may not be withdrawn during this period without the express permission of the City of Pawtucket Purchasing Agent.

a. Awards shall be made to the bidder(s) whose offer(s) constitutes the lowest responsive price offer (or lowest responsive price offer on an evaluated basis) for the item(s) in question or for the Request as a whole, at the option of the City of Pawtucket. The City of Pawtucket reserves the right to determine those offers which are responsive to the Request, or which otherwise serve its best interests.

b. The City of Pawtucket reserves the right, before making award, to initiate investigations as to whether or not the materials, equipment, supplies, qualifications or facilities offered by the bidder meet the requirements set forth in the proposal and specification, and are ample and sufficient to insure the proper performance of the contract in the event of award. If upon such examination it is found that the conditions of the proposal are not complied with or that articles or equipment proposed to be furnished do not meet the requirements called for, or that the qualifications or facilities are not satisfactory, the City of Pawtucket may reject such a bid. It is distinctly understood, however, that nothing in the foregoing shall mean or imply that it is obligatory upon the City of Pawtucket to make any examinations before awarding a contract; and it is further understood that if such examination is made, it in no way relieves the contractor from fulfilling all requirements and conditions of the contract.

c. Qualified or conditional offers which impose limitations of the bidder's liability or modify the requirements of the bid, offers for alternate specifications, or which are made subject to different terms and conditions than those specified by the City of Pawtucket may, at the option of the City of Pawtucket, be
   1. rejected as being non-responsive, or
   2. set aside in favor of the City of Pawtucket's terms and conditions (with the consent of the bidder), or
   3. accepted, where the City of Pawtucket Purchasing Agent determines that such acceptance best serves the interests of the City of Pawtucket.

   Acceptance or rejection of alternate or counter-offers by the City of Pawtucket shall not constitute a precedent which shall be considered to be binding on successive solicitations or procurements.

d. Bids submitted in pencil, or which do not bear an original signature, in ink, by an owner or authorized agent thereof, will not be accepted.

e. Bids must be extended in the unit of measure specified in the Request. In the event of any discrepancy between unit prices and their extensions, the unit price will govern.

f. The City of Pawtucket Purchasing Agent reserves the right to determine the responsibility of any bidder for a particular procurement.

g. The City of Pawtucket Purchasing Agent reserves the right to reject any and all bids in whole or in part, to waive technical defects, irregularities, and omissions, and to give consideration to past performance of the offerors where, in his judgment the best interests of the City of Pawtucket will be served by so doing.

h. The City of Pawtucket Purchasing Agent reserves the right to make awards by items, group of items or on the total low bid for all the items specified as indicated in the detailed specification, unless the bidder specifically indicates otherwise in his bid.

i. Preference may be given to bids on products raised or manufactured in the City of Pawtucket or State of Rhode Island, other things being equal.

j. The impact of discounted payment terms shall not be considered in evaluating responses to any Request.

k. The City of Pawtucket Purchasing Agent reserves the right to act in the City of Pawtucket's best interests regarding awards caused by clerical errors by the City of Pawtucket Purchasing Office.

14. SUSPENSION AND DEBARMENT

The City of Pawtucket Purchasing Agent may suspend or debar any vendor or potential bidder, for good cause shown:

a. A debarment or suspension against a part of a corporate entity constitutes debarment or suspension of all of its divisions and all other organizational elements, except where the action has been specifically limited in scope and application, and may include all known corporate affiliates of a contractor, when such offense or act occurred in connection with the affiliate's performance of duties for or on behalf of the contractor, or with the knowledge, approval, or acquiescence of the contractor or one or more of its principals or

directors (or where the contractor otherwise participated in, knew of, or had reason to know of the acts).

b. The fraudulent, criminal or other serious improper conduct of any officer, director, shareholder, partner, employee, or any other individual associated with a contractor may be imputed to the contractor when the conduct occurred in connection with the individual's performance of duties for or on behalf of the contractor, or with the contractor's knowledge, approval or acquiescence. The contractor's acceptance of benefits derived from the conduct shall be evidence of such knowledge, approval, or acquiescence.

c. A vendor or contractor who knowingly engages as a subcontractor for a contract awarded by the City of Pawtucket to a vendor or contractor then under a ruling of suspension or debarment by the City of Pawtucket shall be subject to disallowance of cost, annulment or termination of award, issuance of a stop work order, or debarment or suspension, as may be judged to be appropriate by the City of Pawtucket's Purchasing Agent.

15. PUBLIC RECORDS

Contractors and bidders are advised that certain documents, correspondence, and other submissions to the City of Pawtucket's Purchasing Office may be voluntarily made public by the City of Pawtucket absent specific notice that portions of such submittals may contain confidential or proprietary information, such that public access to those items should be withheld.

16. PRODUCT EVALUATION

In all specifications, the words "or equal" are understood after each article when manufacturer's name or catalog are referenced. If bidding on items other than those specified, the bidder must, in every instance, give the trade designation of the article, manufacturer's name and detailed specifications of the item the bidder proposes to furnish; otherwise, the bid will be construed as submitted on the identical commodity described in the detailed specifications. The City of Pawtucket's Purchasing Agent reserves the right to determine whether or not the item submitted is the approved equal the detailed specifications.

a. Any objections to specifications must be filed by a bidder, in writing, with the City of Pawtucket's Purchasing Agent at least 96 hours before the time of bid opening to enable the City of Pawtucket's Purchasing Office to properly investigate the objections.

b. All standards are minimum standards except as otherwise provided for in the Request or Contract.

c. Samples must be submitted to the City of Pawtucket's Purchasing Office in accordance with the terms of the proposals and detailed specifications. Samples must be furnished free of charge and must be accompanied by descriptive memorandum invoices indicating whether or not the bidder desires their return and specifying the address to which they are to be returned (at the bidder's risk and expense), provided they have not been used or made useless by tests; and absent instructions, the samples shall be considered to be abandoned. Award samples may be held for comparison with deliveries.

d. All samples submitted are subject to test by any laboratory the City of Pawtucket's Purchasing Agent may designate.

17. PRODUCT ACCEPTANCE

All merchandise offered or otherwise provided shall be new, of prime manufacture, and of first quality unless otherwise specified by the City of Pawtucket. The City of Pawtucket reserves the right to reject all nonconforming goods, and to cause their return for credit or replacement, at the City of Pawtucket's option. Contract deliverables specified for procurements of services shall be construed to be work products, and subject to the provisions of this section.

a. Failure by the City of Pawtucket to discover latent defect(s) or concealed damage or non-conformance shall not foreclose the City of Pawtucket's right to subsequently reject the goods in question.

b. Formal or informal acceptance by the City of Pawtucket of non-conforming goods shall not constitute a precedent for successive receipts or procurements.

c. Where the contractor fails to promptly cure the defect or replace the goods, the City of Pawtucket reserves the right to cancel the Purchase Order, contract with a different contractor, and to invoice the original contractor for any differential in price over the original contract price.

d. When materials, equipment or supplies are rejected, the same must be removed by the contractor from the premises of the City of Pawtucket within forty-eight (48) hours of notification. Rejected items left longer than two days will be regarded as abandoned and the City of Pawtucket shall have the right to dispose of them as its own property.

18. PRODUCT WARRANTIES

All product or service warranties normally offered by the contractor or bidder shall accrue to the City of Pawtucket's benefit, in addition to any special requirements which may be imposed by the City of Pawtucket. Every unit delivered must be guaranteed against faulty material and workmanship for a period of one year unless otherwise specified, and the City of Pawtucket may, in the event of failure, order its replacement, repair, or return for full credit, at its sole option.

19. PAYMENT

Unless otherwise provided for by the Request or Contract, payment shall not be made until delivery has been made, or services performed, in full, and accepted. Payment shall not be due prior to thirty (30) working days following the latest of completion, acceptance, or the rendering of a properly submitted invoice.

a. Payment terms other than the foregoing may be rejected as being nonresponsive.
b. No partial shipments, or partial completion will be accepted, unless provided for by the Request or Contract.
c. Where a question of quality is involved, or failure to complete a project by the specified due date, payment in whole or part against which to charge back any adjustment required, shall be withheld at the direction of the City of Pawtucket Purchasing Agent. In the event a cash discount is stipulated, the withholding of payments, as herein described, will not deprive the City of Pawtucket from taking such discount.
d. Payments for used portion of inferior delivery or late delivery will be made by the City of Pawtucket on an adjusted price basis.
e. Payments on contracts under architectural or engineering supervision must be accompanied by a Certificate of Payment and Statement of Account signed by the architect or engineer and submitted to the City of Pawtucket Purchasing Office for approval.

20. THIRD PARTY PAYMENTS

The City of Pawtucket recognizes no assigned or collateral rights to any purchase agreement except as may be expressly provided for in the bid or contract documents, and will not accede to any request for third party or joint payment(s), except as provided for in specific orders by a court of competent jurisdiction, or by express written permission of the City of Pawtucket's Purchasing Agent. Where an offer is contingent upon such payment(s), the offeror is obligated to serve affirmative notice in his bid submission.

21. SET-OFF AGAINST PAYMENTS

Payments due the contractor may be subject to reduction equal to the amount of unpaid and delinquent state taxes (or other just debt owed to the State), except where notice of delinquency has not been served or while the matter is pending in hearing or from any appeal therefrom.

22. CLAIMS

Any claim against a contractor may be deducted by the City of Pawtucket from any money due him in the same or other transactions. If no deduction is made in such fashion, the contractor shall pay the City of Pawtucket the amount of such claim on demand. Submission of a voucher and payment, thereof, by the City of Pawtucket shall not preclude the City of Pawtucket's Purchasing Agent from demanding a price adjustment in any case when the commodity delivered is later found to deviate from the specifications and proposal.

a. The City of Pawtucket's Purchasing Agent may assess dollar damages against a vendor or contractor determined to be non-performing or otherwise in default of their contractual obligations equal to the cost of remedy incurred by the City of Pawtucket, and make payment of such damages a condition for consideration for any subsequent award. Failure by the vendor or contractor to pay such damages shall constitute just cause for disqualification and rejection, suspension, or debarment.

23. CERTIFICATION OF FUNDING

The Director of Finance shall provide certification as to the availability of funds to support the procurement for the current fiscal year ending June 30th only. Where delivery or service requirements extend beyond the end of the current fiscal year, such extensions are subject to both the availability of appropriated funds and a determination of continued need.

24. UNUSED BALANCES

Unless otherwise specified, all unused Blanket Order quantities and/or unexpended funds shall be automatically canceled on the expiration of the specified term. Similarly, for orders encompassing more than one fiscal year, unexpended balances of funding allotted for an individual fiscal year may be liquidated at the close of that fiscal year, at the City of Pawtucket's sole option.

25. MINORITY BUSINESS ENTERPRISES

Pursuant to the provisions of Title 37 Chapter 14.1of the General Laws, the City of Pawtucket reserves the right to apply additional consideration to offers, and to direct awards to bidders other than the responsive bid representing the lowest price where:

a. the offer is fully responsive to the terms and conditions of the Request, and
b. the price offer is determined to be within a competitive range (not to exceed 5% higher than the lowest responsive price offer) for the product or service, and
c. the firm making the offer has been certified by the R.I. Department of Economic Development to be a small business concern meeting the criteria established to be considered a Minority Business Enterprise.

26. PREVAILING WAGE REQUIREMENT

In accordance with Title 37 Chapter 13 of the General Laws of Rhode Island, payment of the general prevailing rate of per diem wages and the general prevailing rate for regular, overtime and other working conditions existing in the locality for each craft, mechanic, teamster, or type of workman needed to execute this work is a requirement for both contractors and subcontractors for all public works projects.

The rates of pay set forth under this contract, are the minimum to be paid during the life of the Contract. It is therefore, the responsibility of Bidders to inform themselves as to local labor conditions, such as the length of work day and work week, overtime compensation, health and welfare contributions, labor supply and prospective changes or adjustments of rates.

Certified weekly payrolls and statement of compliance forms are required from contractors and subcontractors. Submit on State of Rhode Island Department of Labor and Training forms.

See Appendix C of this document for general wage decision.

27. EQUAL OPPORTUNITY COMPLIANCE, HANDICAPPED ACCESS AND AFFIRMATIVE ACTION

Contractors of the City of Pawtucket are required to demonstrate the same commitment to equal opportunity as prevails under federal contracts controlled by Federal Executive Orders 11246, 11625, 11375 and 11830, and Title 28 Chapter 5.1 of the General Laws of Rhode Island.
Affirmative action plans shall be submitted by the contractor for review by the State Equal Opportunity Office. A contractor's failure to abide by the rules, regulations, contract terms and compliance reporting provisions as established shall be grounds for forfeiture and penalties as shall be established, including but not limited to suspension.

28. DRUG-FREE WORKPLACE REQUIREMENT

Contractors who do business with the City of Pawtucket and their employees shall abide by the State's drug-free workplace policy and the contractor shall so attest by signing a certificate of compliance.

29. TAXES

The City of Pawtucket is exempt from payment of excise, transportation and sales tax imposed by the Federal or State Government. These taxes should not be included in the proposal price. Exemption Certificates will be furnished upon request.

30. INSURANCE

All construction contractors, independent tradesmen, or firms providing any type of maintenance, repair, or other type of service to be performed on City of Pawtucket premises, buildings, or grounds are required to purchase and maintain coverage with a company or companies licensed to do business in the state as follows:

a. Comprehensive General Liability Insurance
   1) Bodily Injury $500,000 each occurrence/ $1,000,000 annual aggregate
   2) Property Damage $500,000 each occurrence /$500,000 annual aggregate
      Independent Contractors
      Contractual - including construction hold harmless and other types of contracts or agreements in effect for insured operations
      Completed Operations
      Personal Injury (with employee exclusion deleted)
b. Automobile Liability Insurance
   Combined Single Limit not less than $150,000 each occurrence
   Bodily Injury
   Property Damage, and in addition non-owned and/or hired vehicles and equipment
c. Workers' Compensation Insurance
   As required by the General Laws of Rhode Island.

The City of Pawtucket's Purchasing Agent reserves the right to consider and accept alternate forms and plans of insurance or to require additional or more extensive coverage for any individual requirement. Successful bidders shall provide certificates of coverage, reflecting the City of Pawtucket as an additional insured, to the City of Pawtucket Purchasing Office, forty-eight (48) hours prior to the commencement of work, as a condition of award. Failure to comply with this provision shall result in rejection of the offeror's bid.

31. BID SURETY

When requested, a bidder must furnish a Bid Bond or Certified Check for 5% of his bid, or for the stated amount shown in the solicitation. Bid Bonds must be executed by a reliable Surety Company authorized to do business in the State of Rhode Island. Failure to provide Bid Surety with bid may be cause for rejection of bid. The Bid Surety of any three bidders in contention will be held until an award has been made according to the specifications of each proposal. All others will be returned by mail within 48 hours following the bid opening. Upon award of a contract, the remaining sureties will be returned by mail unless instructed to do otherwise.

32. PERFORMANCE AND LABOR AND PAYMENT BONDS

A performance bond and labor and payment bond of up to 100% of an award may be required by the City of Pawtucket's Purchasing Agent. Bonds must meet the following requirements:

a. Corporation: The Bond must be signed by an official of the corporation above his/her official title and the corporate seal must be affixed over his/her signature.
b. Firm or Partnership: The Bond must be signed by all of the partners and must indicate that they are " Doing Business As (name of firm)."
c. Individual: The Bond must be signed by the individual owning the business and indicate "Owner."
d. The Surety Company executing the Bond must be licensed to do business in the State of Rhode Island or Bond must be countersigned by a company so licensed.
e. The Bond must be signed by an official of the Surety Company and the corporate seal must be affixed over his signature.
f. Signatures of two witnesses for both the principal and the Surety must appear on the Bond.
g. A Power of Attorney for the official signing of the Bond for the Surety Company must be submitted with the Bond.

33. SUSPENSION, DEFAULT AND TERMINATION

a. Suspension of a Contract by the City of Pawtucket

The City of Pawtucket reserves the right at any time and for any reason to suspend all or part of this contract, for a reasonable period, not to exceed sixty days, unless the parties agree to a longer period. The City of Pawtucket shall provide the contractor with written notice of the suspension order signed by the Purchasing Agent or his or her designee, which shall set forth the date upon which the suspension shall take effect, the date of its expiration, and all applicable instructions. Upon receipt of said order, the contractor shall immediately comply with the order and suspend all work under this contract as specified in the order. The contractor shall take all reasonable steps to mitigate costs and adverse impact to the work specified in the contract during the suspension period. Before the order expires, the City of Pawtucket shall either:

1. cancel the suspension order;
2. extend the suspension order for a specified time period not to exceed thirty (30) days; or
3. terminate the contract as provided herein.

The contractor shall resume performance once a suspension order issued under this section is canceled or expires. If as a result of the suspension of performance, there is a financial or schedule impact upon the contract, an appropriate adjustment may be made by, or with the approval of, the City of Pawtucket's Purchasing Agent. Any adjustment shall be set forth in writing. After a suspension order has been canceled or expires, the contractor shall provide any request for adjustment to the City of Pawtucket's Purchasing Agent within thirty (30) days after resuming work performance.

b. Termination of a Contract by the City of Pawtucket

1. Termination for Default or Nonperformance

If, for any reason, the contractor breaches the contract by failing to satisfactorily fulfill or perform any obligations, promises, terms, or conditions, and having been given reasonable notice of and opportunity to cure such default, fails to take satisfactory corrective action within the time specified by the City of Pawtucket, the City of Pawtucket may terminate the contract, in whole or in part, the termination of all outstanding contracts or sub-contracts held by the contractor, and the suspension or debarment of the contractor from future procurements by giving written notice to the contractor specifying the date for termination. The City of Pawtucket shall endeavor to provide such notice at least seven (7) calendar days before the effective date of the termination.

A contractor who fails to commence within the time specified or complete an award made for repairs, alterations, construction, or any other service will be considered in default of contract. If contractor consistently fails to deliver quantities or otherwise perform as specified, the City of Pawtucket's Purchasing Agent reserves the right to terminate the contract and contract for completion of the work with another contractor and seek recourse from the defaulting contractor or his surety. In the event of a termination for default or nonperformance, in whole or in part, the City of Pawtucket may procure similar goods or services in a manner and upon terms it deems appropriate, and the contractor shall be liable for the excess costs incurred by the City of Pawtucket as a result of the contractor's default. The contractor, or its surety, agrees to promptly reimburse the City of Pawtucket for the excess costs, but shall have no claim to the difference should the replacement cost be less.

2. Termination Without Cause

The City of Pawtucket may terminate the contract in whole or in part without cause at any time by giving written notice to the contractor of such termination at least thirty (30) days before the effective date of such termination. The notice shall specify the part(s) of the contract being terminated and the effective termination date.

Within thirty (30) days of the effective date of the termination of the contract the contractor shall compile and submit to the City of Pawtucket an accounting of the work performed up to the date of termination. The City of Pawtucket may

consider the following claims in determining reasonable compensation owed to the contractor for work performed up to the date of termination:

a. contract prices for goods or services accepted under the contract;
b. costs incurred in preparing to perform and performing the terminated portion of the contract; or
c. any other reasonable costs incurred by the contractor as a result of the termination.

The total sum to be paid to the contractor shall not exceed the total contract price, less any payments previously made to the contractor, the proceeds from any sales of goods or manufacturing materials, and the contract price for work not terminated.

3. Contractor's Obligations in the Event of Termination
If the contract is terminated for any reason, or expires pursuant to its terms, the contractor shall transfer and deliver to the City of Pawtucket in the manner and to the extent directed by the City of Pawtucket:
a. all finished or unfinished material prepared by the contractor; and
b. all material, if any, provided to the contractor by the City of Pawtucket.

For the purposes of the contract, "material" shall include, but is not limited to, goods, supplies, parts, tools, machinery, equipment, furniture, fixtures, information, data, reports, summaries, tables, maps, charts, photographs, studies, recommendations, files, audiotapes, videotapes, records, keys, security badges, and documents.

If the contract is terminated for cause, the contractor shall not be relieved of liability to the City of Pawtucket for damages sustained because of any breach by the contractor. In such event, the City of Pawtucket may retain any amounts which may be due and owing to the contractor until such time as the exact amount of damages due the City of Pawtucket from the contractor has been determined by the City of Pawtucket Purchasing Agent. The City of Pawtucket may also set off any damages so determined against the amounts retained.

Upon termination of the contract, the contractor shall stop performance on the date specified, terminate any outstanding orders and subcontracts applicable to the terminated portion of the contract, and shall incur no further commitments or obligations in connection with the terminated performance. The contractor shall settle all liabilities and claims arising out of the termination of subcontracts and order generating from the terminated performance. The City of Pawtucket may direct the contractor to assign the contractor's right, title and interest under terminated orders or subcontracts to the City of Pawtucket or a third party.

Terminations of Purchase Order Contracts or Master Pricing Agreements shall require the signature of the City of Pawtucket Purchasing Agent or his designee. Notice of termination by either party shall be submitted in writing to the other party in accordance with the termination clause of the contract, or where no specific termination clause is included, written notice shall be provided no later than thirty (30) days before the expiration of the contract.

34. INDEMNITY
The contractor guarantees:

a. To save the City of Pawtucket, its agents and employees, harmless from any liability imposed upon the City of Pawtucket arising from the negligence, either active or passive, of the contractor, as well as for the use of any copyrighted or uncopyrighted composition, secret process, patented or unpatented invention, article or appliance furnished or used in the performance of the contract of which the contractor is not the patentee, assignee or licensee.

b. To pay for all permits, licenses and fees and give all notices and comply with all laws, ordinances, rules and regulations of the City of Pawtucket and of the State of Rhode Island.

c. That the equipment offered is standard new equipment, latest model of regular stock product with all parts regularly used with the type of equipment offered; also, that

no attachment or part has been substituted or applied contrary to manufacturer's recommendations and standard practice.

35. CONTRACTOR'S OBLIGATIONS

In addition to the specific requirements of the contract, construction and building repair contractors bear the following standard responsibilities:

a. To furnish adequate protection from damage for all work and to repair damages of any kind, for which he or his workmen are responsible, to the building or equipment, to his own work, or to the work of other contractors;

b. The contractor, its subcontractor(s) and their employees and/or agents, shall protect and preserve property in the contractor or subcontractor's possessions in which the City of Pawtucket has an interest, and any and all materials provided to the contractor or subcontractor by the City of Pawtucket;

c. To clear and remove all debris and rubbish resulting from his work from time to time, as directed or required, a completion of the work leave the premises in a neat unobstructed condition, broom clean, and in satisfactory order and repair;

d. To store equipment, supplies, and material at the site only upon approval by the City of Pawtucket, and at his own risk;

e. To perform all work so as to cause the least inconvenience to the City of Pawtucket, and with proper consideration for the rights of other contractors and workmen;

f. To acquaint themselves with conditions to be found at the site, and to assume responsibility for the appropriate dispatching of equipment and supervision of his employees during the conduct of the work;

g. To ensure that his employees are instructed with respect to special regulations, policies, and procedures in effect for any City of Pawtucket facility or site, and that they comply with such rules, including but not limited to security policies or practices and/or criminal background checks for any employees and/or subcontractors;

h. The contractor shall ensure that its employees or agents are experienced and fully qualified to engage in the activities and services required under the contract;

i. The contractor shall ensure that at all times while services are being performed under this contract at least one of its employees or agents on the premises has a good command of the English language and can effectively communicate with the City of Pawtucket and its staff;

j. The contractor and contractor's employees or agents shall comply with all applicable licensing and operating requirements required by federal or state law and shall meet accreditation and other generally accepted standards of quality in the applicable field of activity;

k. The contractor shall secure and retain all employee-related insurance coverage for its employees and agents as required by law; and

l. The contractor, subcontractor, and his or her employees and agents shall not disclose any confidential information of the City of Pawtucket to a third party. Confidential information means:

(1) any information of a sensitive or proprietary nature, whether or not specially identified as confidential or proprietary; or

(2) any information about the City of Pawtucket gained during the performance of a contract that
is not already lawfully in the public domain.

36. FORCE MAJEURE

All orders shall be filled by the contractor with reasonable promptness, but the contractor shall not be held responsible for any losses resulting if the fulfillment of the terms of the contract shall be delayed or prevented by wars, acts of public enemies, strikes, fires, floods, acts of God, or for any other acts not within the control of the contractor and which by the exercise of reasonable diligence, the contractor is unable to prevent.

Appendix C

General Wage Rate Decision
Davis Bacon

The current wage determination (Heavy Construction, Providence County), as obtained from the Rhode Island Department of Labor and Training on today's date, is bound as part of this Project Manual.

General Decision Number: RI160001 02/19/2016 RI1

Superseded General Decision Number: RI20150001

State: Rhode Island

Construction Types: Building, Heavy (Heavy and Marine) and Highway

Counties: Rhode Island Statewide.

BUILDING CONSTRUCTION PROJECTS (does not include residential construction consisting of single family homes and apartments up to and including 4 stories) HEAVY, HIGHWAY AND MARINE CONSTRUCTION PROJECTS

Note: Under Executive Order (EO) 13658, an hourly minimum wage of $10.15 for calendar year 2016 applies to all contracts subject to the Davis-Bacon Act for which the solicitation was issued on or after January 1, 2015. If this contract is covered by the EO, the contractor must pay all workers in any classification listed on this wage determination at least $10.15 (or the applicable wage rate listed on this wage determination, if it is higher) for all hours spent performing on the contract in calendar year 2016. The EO minimum wage rate will be adjusted annually. Additional information on contractor requirements and worker protections under the EO is available at www.dol.gov/whd/govcontracts.

Modification Number	Publication Date
0	01/08/2016
1	01/15/2016
2	01/29/2016
3	02/12/2016
4	02/19/2016

ASBE0006-006 06/01/2015

	Rates	Fringes
HAZARDOUS MATERIAL HANDLER (Includes preparation, wetting, stripping, removal scrapping, vacuuming, bagging & disposing of all insulation materials, whether they contain asbestos or not, from mechanical systems).....	$ 31.63	18.30

ASBE0006-008 09/01/2015

	Rates	Fringes
Asbestos Worker/Insulator Includes application of all insulating materials, protective coverings, coatings & finishes to all		

```
     types of mechanical systems.$ 39.43           25.65
-----------------------------------------------------------------
 BOIL0029-001 10/01/2009

                                  Rates          Fringes

BOILERMAKER.....................$ 38.25           17.04
-----------------------------------------------------------------
 BRRI0003-001 12/01/2014

                                  Rates          Fringes

Bricklayer, Stonemason,
Pointer, Caulker & Cleaner.......$ 35.94           23.67
-----------------------------------------------------------------
 BRRI0003-002 09/01/2015

                                  Rates          Fringes

Marble Setter, Terrazzo
Worker & Tile Setter............$ 36.29           25.14
-----------------------------------------------------------------
 BRRI0003-003 09/01/2015

                                  Rates          Fringes

Marble, Tile & Terrazzo
Finisher........................$ 30.61           23.95
-----------------------------------------------------------------
 CARP0094-001 06/07/2015

                                  Rates          Fringes

CARPENTER (Includes Soft
Floor Layer)....................$ 34.56           24.75
Diver Tender....................$ 35.56           24.75
DIVER...........................$ 46.36           24.75
Piledriver......................$ 34.56           24.75
WELDER..........................$ 35.56           24.75

FOOTNOTES:

  When not diving or tending the diver, the diver and diver
  tender shall receive the piledriver rate. Diver tenders
  shall receive $1.00 per hour above the pile driver rate
  when tending the diver.

  Work on free-standing stacks, concrete silos & public utility
  electrical power houses, which are over 35 ft. in height
  when constructed: $.50 per hour additional.

  Work on exterior concrete shear wall gang forms, 45 ft. or
  more above ground elevation or on setback: $.50 per hour
  additional.

  The designated piledriver, known as the "monkey": $1.00 per
  hour additional.

-----------------------------------------------------------------
 CARP1121-002 04/01/2015
```

	Rates	Fringes
MILLWRIGHT	$ 34.09	25.88

ELEC0099-002 06/01/2015

	Rates	Fringes
ELECTRICIAN	$ 35.83	59.94%
Teledata System Installer	$ 26.87	13.72%+13.57

FOOTNOTES:

Work of a hazardous nature, or where the work height is 30 ft. or more from the floor, except when working OSHA-approved lifts: 20% per hour additional.

Work in tunnels below ground level in combined sewer outfall: 20% per hour additional.

ELEV0039-001 01/01/2016

	Rates	Fringes
ELEVATOR MECHANIC	$ 47.37	29.985+A+B

FOOTNOTES:

A. PAID HOLIDAYS: New Years Day; Memorial Day; Independence Day; Labor Day; Veterans' Day; Thanksgiving Day; the Friday after Thanksgiving Day; and Christmas Day.

B. Employer contributes 8% basic hourly rate for 5 years or more of service of 6% basic hourly rate for 6 months to 5 years of service as vacation pay credit.

ENGI0057-001 06/01/2014

	Rates	Fringes
Operating Engineer: (power plants, sewer treatment plants, pumping stations, tunnels, caissons, piers, docks, bridges, wind turbines, subterranean & other marine and heavy construction work)		
GROUP 1	$ 36.15	22.35+a
GROUP 2	$ 31.77	22.35+a
GROUP 3	$ 28.92	22.35+a
GROUP 4	$ 35.20	22.35+a
GROUP 5	$ 26.00	22.35+a
GROUP 6	$ 20.00	22.35+a
GROUP 7	$ 31.85	22.35+a
GROUP 8	$ 35.77	22.35+a

a. BOOM LENGTHS, INCLUDING JIBS:

150 feet and over + $ 2.00
180 feet and over + $ 3.00
210 feet and over + $ 4.00
240 feet and over + $ 5.00
270 feet and over + $ 7.00
300 feet and over + $ 8.00
350 feet and over + $ 9.00
400 feet and over + $10.00

a. PAID HOLIDAYS:
New Year's Day, President's Day, Memorial Day, July Fourth, Victory Day, Labor Day, Columbus Day, Veterans Day, Thanksgiving Day, Christmas Day. a: Any employee who works 3 days in the week in which a holiday falls shall be paid for the holiday.

a. FOOTNOTES:
Hazmat work: $2.00 per hour additional.
Tunnel/Shaft work: $5.00 per hour additional.

POWER EQUIPMENT OPERATORS CLASSIFICATIONS

GROUP 1: Digging machine, Ross Carrier, crane, lighter, locomotive, derrick, hoist, elevator, bidwell-type machine, shot & water blasting machine, paver, spreader, graders, front end loader (3 yds. and over), vibratory hammer & vacuum truck, roadheaders, forklifts, economobile type equipment, tunnel boring machines, concrete pump and on site concrete plants.

GROUP 2: Fireman & oiler.

GROUP 3: Oiler on crawler backhoe.

GROUP 4: Bulldozer, bobcats, skid steer loader, tractor, scraper, combination loader backhoe, roller, front end loader (less than 3 yds.), street and mobile-powered sweeper (3-yd. capacity), 8-ft. sweeper minimum 65 HP).

GROUP 5: Well-point installation crew.

GROUP 6: Utility Engineers and Signal Persons

GROUP 7: Heater, concrete mixer, stone crusher, welding machine, generator and light plant, gas and electric driven pump and air compressor.

GROUP 8: Boat & tug operator.

ENGI0057-002 05/05/2014

	Rates	Fringes
Power Equipment Operator (highway construction projects; water and sewerline projects which are incidental to highway construction projects; and bridge projects		

that do not span water)

GROUP 1	$ 31.30	22.35+a
GROUP 2	$ 26.00	22.35+a
GROUP 3	$ 20.00	22.35+a
GROUP 4	$ 26.58	22.35+a
GROUP 5	$ 30.28	22.35+a
GROUP 6	$ 29.90	22.35+a
GROUP 7	$ 25.55	22.35+a
GROUP 8	$ 26.93	22.35+a
GROUP 9	$ 28.88	22.35+a

a. FOOTNOTE: a. Any employee who works three days in the week in which a holiday falls shall be paid for the holiday.

a. PAID HOLIDAYS: New Year's Day, President's Day, Memorial Day, July Fourth, Victory Day, Labor Day, Columbus Day, Veterans Day, Thanksgiving Day & Christmas Day.

POWER EQUIPMENT OPERATOR CLASSIFICATIONS

GROUP 1: Digging machine, crane, piledriver, lighter, locomotive, derrick, hoist, boom truck, John Henry's, directional drilling machine, cold planer, reclaimer, paver, spreader, grader, front end loader (3 yds. and over), vacuum truck, test boring machine operator, veemere saw, water blaster, hydro-demolition robot, forklift, economobile, Ross Carrier, concrete pump operator and boats

GROUP 2: Well point installation crew

GROUP 3: Utlity engineers and signal persons

GROUP 4: Oiler on cranes

GROUP 5: Combination loader backhoe, front end loader (less than 3 yds.), forklift, bulldozers & scrapers and boats

GROUP 6: Roller,skid steer loaders, street sweeper

GROUP 7: Gas and electric drive heater, concrete mixer, light plant, welding machine, pump & compressor

GROUP 8: Stone crusher

GROUP 9: Mechanic & welder

ENGI0057-003 06/01/2014

BUILDING CONSTRUCTION

	Rates	Fringes
Power Equipment Operator		
GROUP 1	$ 35.42	22.35+a
GROUP 2	$ 35.20	22.35+a
GROUP 3	$ 31.20	22.35+a
GROUP 4	$ 28.35	22.35+a
GROUP 5	$ 34.50	22.35+a
GROUP 6	$ 34.07	22.35+a
GROUP 7	$ 31.39	22.35+a

a.BOOM LENTHS, INCLUDING JIBS:

150 ft. and over: + $ 2.00
180 ft. and over: + $ 3.00
210 ft. and over: + $ 4.00
240 ft. and over: + $ 5.00
270 ft. and over: + $ 7.00
300 ft. and over: + $ 8.00
350 ft. and over: + $ 9.00
400 ft. and over: + $10.00

a. PAID HOLIDAYS: New Year's Day, President's Day, Memorial Day, July Fourth, Victory Day, Labor Day, Columbus Day, Veterans Day, Thanksgiving Day & Christmas Day. a: Any employee who works 3 days in the week in which a holiday falls shall be paid for the holiday.

a. FOOTNOTE: Hazmat work: $2.00 per hour additional.
Tunnel/Shaft work: $5.00 per hour additional.

POWER EQUIPMENT OPERATORS CLASSIFICATIONS

GROUP 1: Digging machine, Ross carrier, crane, boomtrucks, lighter, locomotive, derrick, hoist, elevator, bidwell-type machine, shot & water blasting machine, paver, spreader, front end loader (3 yds. and over), vibratory hammer and vacuum truck

GROUP 2: Telehandler equipment, forklift, concrete pump & on-site concrete plant

GROUP 3: Fireman & oiler

GROUP 4: Oiler on crawler backhoe

GROUP 5: Bulldozer,skid steer loaders,bobcats, tractor, grader, scraper,combination loader backhoe, roller, front end loader (less than 3 yds.), street and mobile powered sweeper (3 yds. capacity), 8-ft. sweeper (minimum 65 hp)

GROUP 6: Well point installation crew

GROUP 7: Heater, concrete mixer, stone crusher, welding machine, generator for light plant, gas and electric driven pump & air compressor

---

IRON0037-001 03/16/2015

	Rates	Fringes
IRONWORKER	$ 33.96	23.87

LABO0271-001 06/01/2014

BUILDING CONSTRUCTION

	Rates	Fringes

```
LABORER
     GROUP 1.....................$ 28.05            22.45
     GROUP 2.....................$ 28.30            22.45
     GROUP 3.....................$ 28.80            22.45
     GROUP 4.....................$ 29.05            22.45
     GROUP 5.....................$ 30.05            22.45

LABORERS CLASSIFICATIONS

  GROUP 1: Laborer, Carpenter Tender, Mason Tender, Cement
  Finisher Tender, Scaffold Erector, Wrecking Laborer,
  Asbestos Removal [Non-Mechanical Systems]

  GROUP 2: Asphalt Raker, Adzemen, Pipe Trench Bracer,
  Demolition Burner, Chain Saw Operator, Fence & Guard Rail
  Erector, Setter of Metal Forms for Roadways, Mortar Mixer,
  Pipelayer, Riprap & Dry Stonewall Builder, Highway Stone
  Spreader, Pneumatic Tool Operator, Wagon Drill Operator,
  Tree Trimmer, Barco-Type Jumping Tamper, Mechanical Grinder
  Operator

GROUP 3: Pre-Cast Floor & Roof Plank Erectors

  GROUP 4: Air Track Operator, Hydraulic & Similar Self-Powered
  Drill, Block Paver, Rammer, Curb Setter, Powderman & Blaster

GROUP 5: Toxic Waste Remover

-----------------------------------------------------------------
 LABO0271-002 06/01/2014

HEAVY AND HIGHWAY CONSTRUCTION

                                  Rates          Fringes

LABORER
     COMPRESSED AIR
      Group 1....................$ 45.48            20.70
      Group 2....................$ 35.00            20.70
      Group 3....................$ 47.48            20.70
     FREE AIR
      Group 1....................$ 37.55            20.70
      Group 2....................$ 35.00            20.70
      Group 3....................$ 39.55            20.70
     LABORER
      Group 1....................$ 28.05            20.70
      Group 2....................$ 28.30            20.70
      Group 3....................$ 29.05            20.70
      Group 4....................$ 21.55            20.70
      Group 5....................$ 30.05            20.70
     OPEN AIR CAISSON,
     UNDERPINNING WORK AND
     BORING CREW
      Bottom Man.................$ 34.05            20.70
      Top Man & Laborer..........$ 33.10            20.70
     TEST BORING
      Driller....................$ 34.50            20.70
      Laborer....................$ 33.10            20.70

LABORER CLASSIFICATIONS
```

GROUP 1: Laborer; Carpenter tender; Cement finisher tender; Wrecking laborer; Asbestos removers [non-mechanical systems]; Plant laborer; Driller in quarries

GROUP 2: Adzeperson; Asphalt raker; Barcotype jumping tamper; Chain saw operators; Concrete and power buggy operator; Concrete saw operator; Demolition burner; Fence and guard rail erector; Highway stone spreader; Laser beam operator; Mechanical grinder operator; Mason tender; Mortar mixer; Pneumatic tool operator; Riprap and dry stonewall builder; Scaffold erector; Setter of metal forms for roadways; Wagon drill operator; Wood chipper operator; Pipelayer; Pipe trench bracer

GROUP 3: Air track drill operator; Hydraulic and similar powered drills; Brick paver; Block paver; Rammer and curb setter; Powderperson and blaster

GROUP 4: Flagger & signaler

GROUP 5: Toxic waste remover

LABORER - COMPRESSED AIR CLASSIFICATIONS

GROUP 1: Mucking machine operator, tunnel laborer, brake person, track person, miner, grout person, lock tender, gauge tender, miner: motor person & all others in compressed air

GROUP 2: Change house attendant, powder watchperson, top person on iron

GROUP 3: Hazardous waste work within the "HOT" zone

LABORER - FREE AIR CLASSIFICATIONS

GROUP 1: Grout person - pumps, brake person, track person, form mover & stripper (wood & steel), shaft laborer, laborer topside, outside motorperson, miner, conveyor operator, miner welder, heading motorperson, erecting operator, mucking machine operator, nozzle person, rodperson, safety miner, shaft & tunnel, steel & rodperson, mole nipper, concrete worker, form erector (wood, steel and all accessories), cement finisher (this type of work only), top signal person, bottom person (when heading is 50' from shaft), burner, shield operator and TBM operator

GROUP 2: Change house attendant, powder watchperson

GROUP 3: Hazardous waste work within the "HOT" zone

PAIN0011-005 06/01/2015

	Rates	Fringes
PAINTER		
Brush, Roller, Taper, Wall Coverer	$ 31.52	19.35
Epoxy, Tanks, Towers,		

```
     Swing Stage & Structural
     Steel.......................$ 33.52           19.35
     Spray, Sand & Water
     Blasting....................$ 32.52           19.35
-----------------------------------------------------------------
 PAIN0011-006 06/01/2015

                                  Rates          Fringes

GLAZIER.........................$ 35.08           19.35

FOOTNOTES:

SWING STAGE: $1.00 per hour additional.

PAID HOLIDAYS: Labor Day & Christmas Day.

-----------------------------------------------------------------
 PAIN0011-011 06/01/2015

                                  Rates          Fringes

 Painter (Bridge Work)...........$ 45.95           19.35
-----------------------------------------------------------------
 PAIN0035-008 06/01/2011

                                  Rates          Fringes

Sign Painter....................$ 24.79           13.72
-----------------------------------------------------------------
 PLAS0040-001 12/01/2015

BUILDING CONSTRUCTION

                                  Rates          Fringes

CEMENT MASON/CONCRETE FINISHER...$ 32.30           26.20
PLASTERER.......................$ 33.00           25.50

  FOOTNOTE: Cement Mason: Work on free swinging scaffolds under
  3 planks width and which is 20 or more feet above ground
  and any offset structure: $.30 per hour additional.

-----------------------------------------------------------------
 PLAS0040-002 07/19/2015

HEAVY AND HIGHWAY CONSTRUCTION

                                  Rates          Fringes

CEMENT MASON/CONCRETE FINISHER...$ 29.10           20.95
-----------------------------------------------------------------
 PLUM0051-002 09/01/2015

                                  Rates          Fringes

Plumbers and Pipefitters.........$ 36.88           27.95
-----------------------------------------------------------------
 ROOF0033-004 01/01/2016

                                  Rates          Fringes
```

ROOFER.....$ 33.53 21.84

---

* SFRI0669-001 01/01/2016

	Rates	Fringes
SPRINKLER FITTER	$ 41.37	20.77

SHEE0017-002 12/01/2015

	Rates	Fringes
Sheet Metal Worker	$ 34.46	33.18

TEAM0251-001 08/01/2015

HEAVY AND HIGHWAY CONSTRUCTION

	Rates	Fringes
TRUCK DRIVER		
GROUP 1	$ 26.71	21.3225+A+B+C
GROUP 2	$ 26.86	21.3225+A+B+C
GROUP 3	$ 26.91	21.3225+A+B+C
GROUP 4	$ 26.96	21.3225+A+B+C
GROUP 5	$ 27.06	21.3225+A+B+C
GROUP 6	$ 27.46	21.3225+A+B+C
GROUP 7	$ 27.66	21.3225+A+B+C
GROUP 8	$ 27.16	21.3225+A+B+C
GROUP 9	$ 27.41	21.3225+A+B+C
GROUP 10	$ 27.21	21.3225+A+B+C

FOOTNOTES:

A. Paid Holidays: New Year's Day, Memorial Day, Independence Day, Labor Day, Thanksgiving Day and Christmas Day, plus Presidents' Day, Columbus Day, Veteran's Day & V-J Day, providing the employee has worked at least one day in the calendar week in which the holiday falls.

B. Employee who has been on the payroll for 1 year or more but less than 5 years and has worked 150 Days during the last year of employment shall receive 1 week's paid vacation; 5 to 10 years - 2 weeks' paid vacation; 10 or more years - 3 week's paid vacation.

C. Employees on the seniority list shall be paid a one hundred dollar ($100.00) bonus for every four hundred (400) hours worked, up to a maximum of five hundred dollars ($500.00)

All drivers working on a defined hazard material job site shall be paid a premium of $2.00 per hour over applicable rate.

TRUCK DRIVER CLASSIFICATIONS

GROUP 1: Pick-up trucks, station wagons, & panel trucks

GROUP 2: Two-axle on low beds

GROUP 3: Two-axle dump truck

GROUP 4: Three-axle dump truck

GROUP 5: Four- and five-axle equipment

GROUP 6: Low-bed or boom trailer.

GROUP 7: Trailers when used on a double hook up (pulling 2 trailers)

GROUP 8: Special earth-moving equipment, under 35 tons

GROUP 9: Special earth-moving equipment, 35 tons or over

GROUP 10: Tractor trailer

WELDERS - Receive rate prescribed for craft performing operation to which welding is incidental.

==========

Unlisted classifications needed for work not included within the scope of the classifications listed may be added after award only as provided in the labor standards contract clauses (29CFR 5.5 (a) (1) (ii)).

The body of each wage determination lists the classification and wage rates that have been found to be prevailing for the cited type(s) of construction in the area covered by the wage determination. The classifications are listed in alphabetical order of "identifiers" that indicate whether the particular rate is a union rate (current union negotiated rate for local), a survey rate (weighted average rate) or a union average rate (weighted union average rate).

Union Rate Identifiers

A four letter classification abbreviation identifier enclosed in dotted lines beginning with characters other than "SU" or "UAVG" denotes that the union classification and rate were prevailing for that classification in the survey. Example: PLUM0198-005 07/01/2014. PLUM is an abbreviation identifier of the union which prevailed in the survey for this classification, which in this example would be Plumbers. 0198 indicates the local union number or district council number where applicable, i.e., Plumbers Local 0198. The next number, 005 in the example, is an internal number used in processing the wage determination. 07/01/2014 is the effective date of the most current negotiated rate, which in this example is July 1, 2014.

Union prevailing wage rates are updated to reflect all rate

changes in the collective bargaining agreement (CBA) governing this classification and rate.

Survey Rate Identifiers

Classifications listed under the "SU" identifier indicate that no one rate prevailed for this classification in the survey and the published rate is derived by computing a weighted average rate based on all the rates reported in the survey for that classification. As this weighted average rate includes all rates reported in the survey, it may include both union and non-union rates. Example: SULA2012-007 5/13/2014. SU indicates the rates are survey rates based on a weighted average calculation of rates and are not majority rates. LA indicates the State of Louisiana. 2012 is the year of survey on which these classifications and rates are based. The next number, 007 in the example, is an internal number used in producing the wage determination. 5/13/2014 indicates the survey completion date for the classifications and rates under that identifier.

Survey wage rates are not updated and remain in effect until a new survey is conducted.

Union Average Rate Identifiers

Classification(s) listed under the UAVG identifier indicate that no single majority rate prevailed for those classifications; however, 100% of the data reported for the classifications was union data. EXAMPLE: UAVG-OH-0010 08/29/2014. UAVG indicates that the rate is a weighted union average rate. OH indicates the state. The next number, 0010 in the example, is an internal number used in producing the wage determination. 08/29/2014 indicates the survey completion date for the classifications and rates under that identifier.

A UAVG rate will be updated once a year, usually in January of each year, to reflect a weighted average of the current negotiated/CBA rate of the union locals from which the rate is based.

WAGE DETERMINATION APPEALS PROCESS

1.) Has there been an initial decision in the matter? This can be:

* an existing published wage determination
* a survey underlying a wage determination
* a Wage and Hour Division letter setting forth a position on a wage determination matter
* a conformance (additional classification and rate) ruling

On survey related matters, initial contact, including requests for summaries of surveys, should be with the Wage and Hour Regional Office for the area in which the survey was conducted because those Regional Offices have responsibility for the Davis-Bacon survey program. If the response from this initial contact is not satisfactory, then the process described in 2.)

and 3.) should be followed.

With regard to any other matter not yet ripe for the formal process described here, initial contact should be with the Branch of Construction Wage Determinations. Write to:

Branch of Construction Wage Determinations
Wage and Hour Division
U.S. Department of Labor
200 Constitution Avenue, N.W.
Washington, DC 20210

2.) If the answer to the question in 1.) is yes, then an interested party (those affected by the action) can request review and reconsideration from the Wage and Hour Administrator (See 29 CFR Part 1.8 and 29 CFR Part 7). Write to:

Wage and Hour Administrator
U.S. Department of Labor
200 Constitution Avenue, N.W.
Washington, DC 20210

The request should be accompanied by a full statement of the interested party's position and by any information (wage payment data, project description, area practice material, etc.) that the requestor considers relevant to the issue.

3.) If the decision of the Administrator is not favorable, an interested party may appeal directly to the Administrative Review Board (formerly the Wage Appeals Board). Write to:

Administrative Review Board
U.S. Department of Labor
200 Constitution Avenue, N.W.
Washington, DC 20210

4.) All decisions by the Administrative Review Board are final.

==========

END OF GENERAL DECISION

Appendix D

50-50 Sidewalk Program Application

CITY OF PAWTUCKET

PUBLIC WORKS CENTER
250 ARMISTICE BOULEVARD
PAWTUCKET, RHODE ISLAND 02860

DONALD R. GREBIEN
MAYOR

OFFICE OF THE PUBLIC WORKS CENTER

LANCE HILL, PE
DIRECTOR

50/50 SIDEWALK APPLICATION

Applicant Street Address: _____

Applicant Lot Information:

- Tax Assessor's Plat Number:_____
- Tax Assessor's Lot Number(s):_____

The undersigned, owner of the property described above, hereby requests:

☐ Portland Cement Concrete Sidewalk (full repair or new installation, property line to property line)
☐ Portland Cement Concrete Sidewalk (isolated or partial repair*)
**Please describe the type of repair you are seeking:*

_____

_____

The undersigned further acknowledges and agrees to the terms of the application outlined below.

_____ _____
Date Print Name

_____ _____
Phone No. Sign Name

_____
Email Address

Terms and Conditions:

1. Sidewalk construction shall conform to the Rhode Island Department of Transportation's "Standard Specifications for Road and Bridge Construction", Chapter 351 of the Ordinances of the City of Pawtucket, and the City of Pawtucket Specifications for Right-Of-Way Alteration.
2. The applicant agrees to maintain the whole sidewalk from curb line to the property line in accordance with Chapter 351 of the Ordinances of the City of Pawtucket.
3. The estimated cost of construction is only an estimate and may differ from the actual cost of construction. In such case as the actual cost differs from estimated cost, the applicant will be billed or refunded 50% of the difference.
4. Applicant's portion of the estimated construction cost must be PAID IN FULL before commencement of work.
5. DPW will administer the program per the schedule provided on the **reverse side of this page**.

DPW "50-50 SIDEWALK PROGRAM" ADMINISTRATION SCHEDULE

Application "Round"	Milestone	Date
Round 1	Application Due	March 1st
	DPW Issues Cost Estimate to Applicant	April 15th
	Applicant's Response to Cost Estimate Due	May 14th
	Work Order Issued to Contractor	May 15th
	Construction	May 16th – August 15th
Round 2	Application Due	June 1st
	DPW Issues Cost Estimate to Applicant	July 15th
	Applicant's Response to Cost Estimate Due	August 14th
	Work Order Issued to Contractor	August 15th
	Construction	August 16th – November 15th

Appendix E

Construction Details

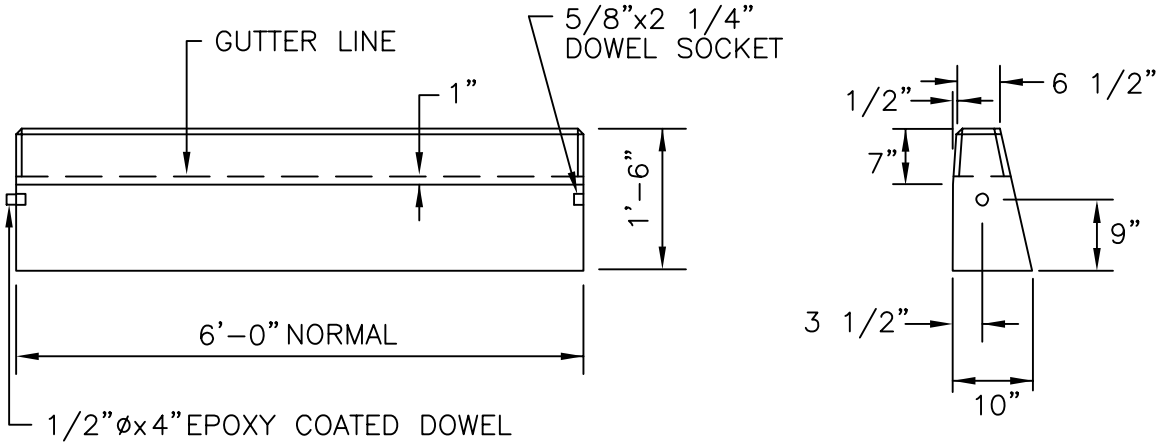

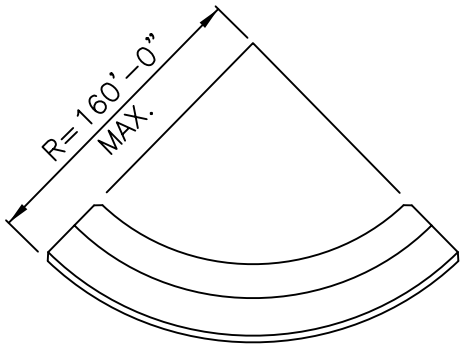

CIRCULAR CURB

NOTES:

1. SHALL BE IN ACCORDANCE WITH SECTION 906 OF THE R.I. STANDARD SPECIFICATIONS.
2. MINIMUM LENGTH OF STRAIGHT OR CIRCULAR FILLER PIECES TO BE 3'-0".
3. EXPOSED SURFACES TO HAVE A SPONGE FLOAT FINISH.
4. CIRCULAR CURB IS REQUIRED ON CURVES WITH RADII OF 160'-0" OR LESS. STRAIGHT CURB TO BE USED ON CURVES OF MORE THAN 160'-0" RADIUS.
5. EXPOSED EDGES TO HAVE A 3/4" CHAMFER.

RHODE ISLAND DEPARTMENT OF TRANSPORTATION

REVISIONS		
NO.	BY	DATE
1	MLP	Mar 05

PRECAST CONCRETE CURB

CHIEF ENGINEER TRANSPORTATION

CHIEF DESIGN ENGINEER TRANSPORTATION

JUNE 15, 1998
ISSUE DATE

R.I. STANDARD 7.1.0

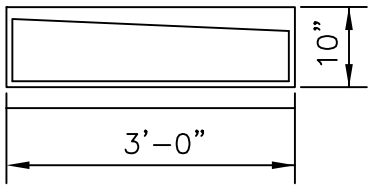

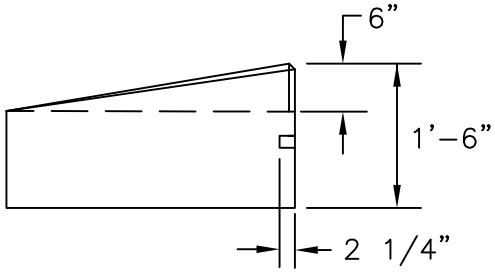

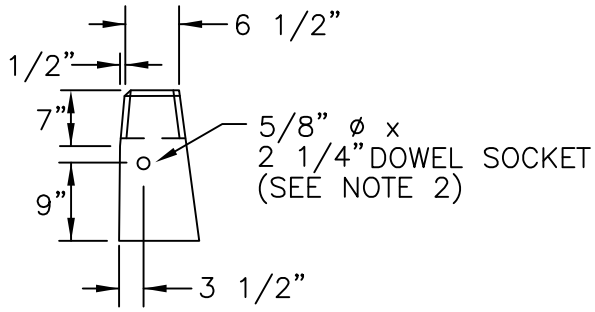

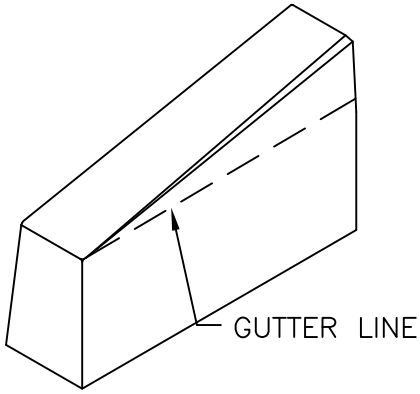

NOTES:

1. SHALL BE IN ACCORDANCE WITH SECTION 906 OF THE R.I. STANDARD SPECIFICATIONS.
2. DRAWING SHOWS TRANSITION CURB FOR ONE DIRECTION, FOR OTHER DIRECTION USE OPPOSITE HAND AND INCLUDE A 1/2" ø x 4" EPOXY COATED DOWEL.
3. EXPOSED SURFACES TO HAVE A SPONGE FLOAT FINISH.
4. EXPOSED EDGES TO HAVE A 3/4" CHAMFER.
5. LEFT AND RIGHT SECTIONS SHALL BE INSTALLED AS REQUIRED.

RHODE ISLAND DEPARTMENT OF TRANSPORTATION

REVISIONS		
NO.	BY	DATE
1	MLP	Mar 05
2	MLP	06/01/10

3'-0" PRECAST CONCRETE TRANSITION CURB

CHIEF ENGINEER TRANSPORTATION

CHIEF DESIGN ENGINEER TRANSPORTATION

JUNE 15, 1998
ISSUE DATE

R.I. STANDARD 7.1.1

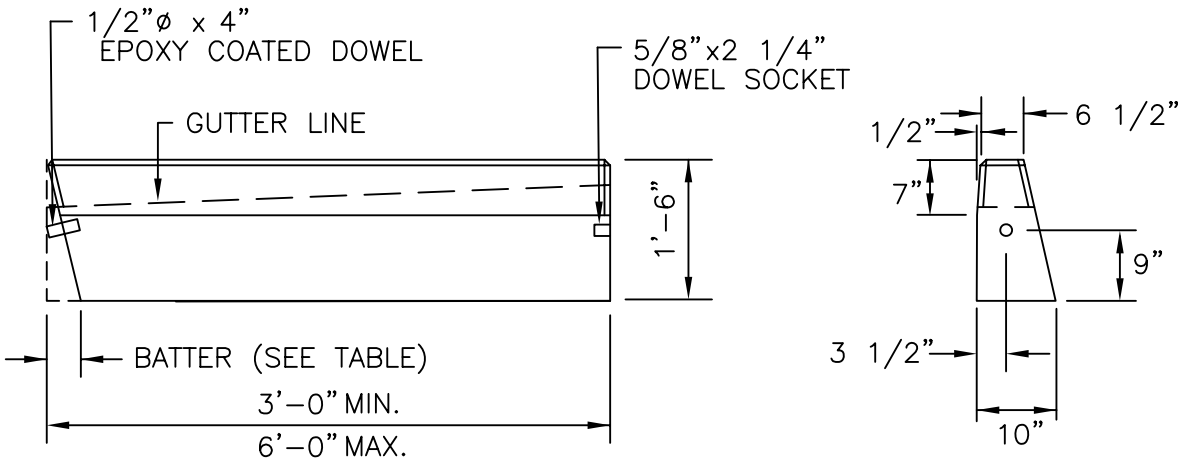

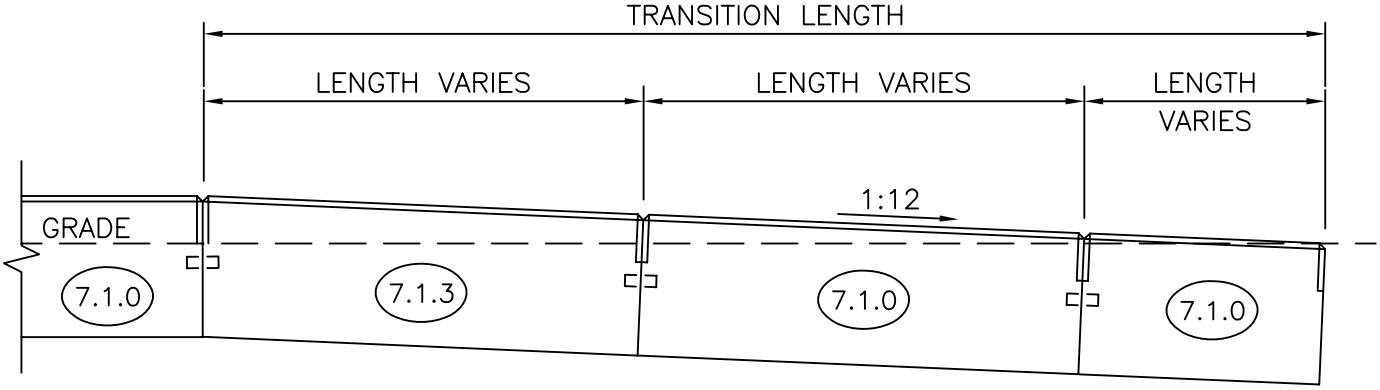

TRANSITION LENGTH (FT.)	BATTER (IN.)
6.0	1.5
7.0	1.3
8.0	1.2
9.5	1.0
11.5	0.8
15.0	0.6
18.0	0.5

NOTES:

1. SHALL BE IN ACCORDANCE WITH SECTION 906 OF THE R.I. STANDARD SPECIFICATIONS.
2. CIRCULAR CURB IS REQUIRED ON CURVES WITH RADII OF 160'-0" OR LESS. STRAIGHT CURB TO BE USED ON CURVES OF MORE THAN 160'-0" RADIUS.
3. EXPOSED EDGES TO HAVE A 3/4" CHAMFER.
4. EXPOSED SURFACES TO HAVE A SPONGE FLOAT FINISH.
5. MINIMUM LENGTH OF STRAIGHT OR CIRCULAR CURB FILLER PIECES TO BE 3'-0" (GREATER LENGTHS PREFERRED).

RHODE ISLAND DEPARTMENT OF TRANSPORTATION

REVISIONS		
NO.	BY	DATE
1	MLP	Mar 05

PRECAST CONCRETE WHEELCHAIR RAMP TRANSITION CURB

CHIEF ENGINEER TRANSPORTATION

CHIEF DESIGN ENGINEER TRANSPORTATION

JUNE 15, 1998
ISSUE DATE

R.I. STANDARD 7.1.3

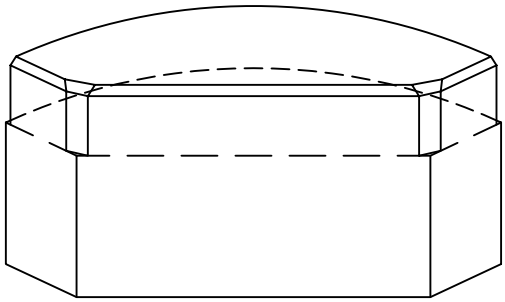

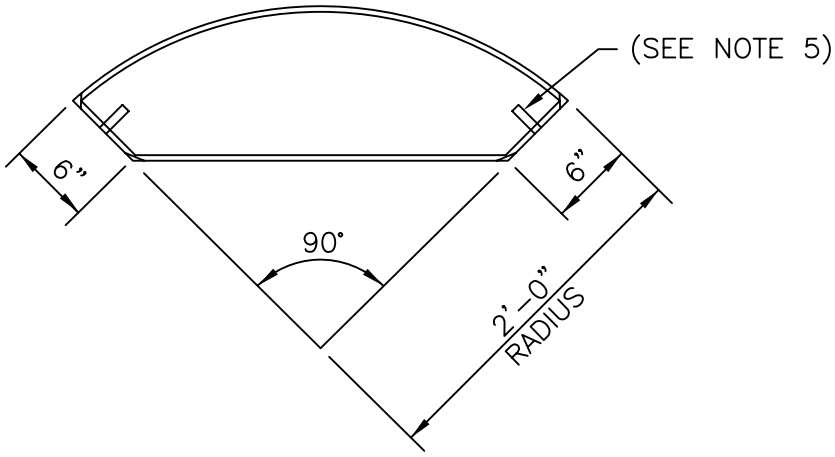

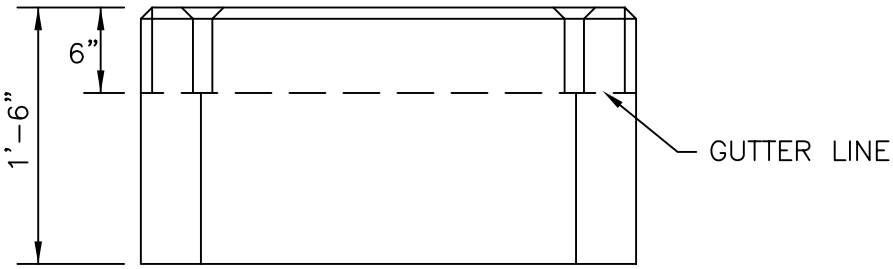

NOTES:
1. SHALL BE IN ACCORDANCE WITH SECTION 906 OF THE R.I. STANDARD SPECIFICATIONS.
2. EXPOSED SURFACES TO HAVE A SPONGE FLOAT FINISH.
3. NO REINFORCEMENT REQUIRED.
4. EXPOSED EDGES TO HAVE A 3/4" CHAMFER.
5. SEE STD. 7.1.0 FOR DOWEL SOCKET LOCATION.

RHODE ISLAND DEPARTMENT OF TRANSPORTATION

REVISIONS		
NO.	BY	DATE
1	MLP	Mar 05

PRECAST CONCRETE
2'-0" RADIUS CORNER

CHIEF ENGINEER TRANSPORTATION

CHIEF DESIGN ENGINEER TRANSPORTATION

JUNE 15, 1998
ISSUE DATE

R.I. STANDARD 7.1.4

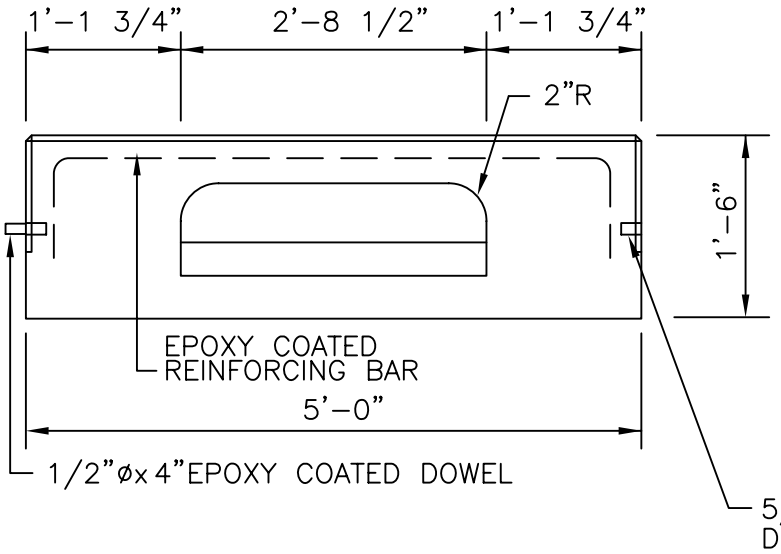

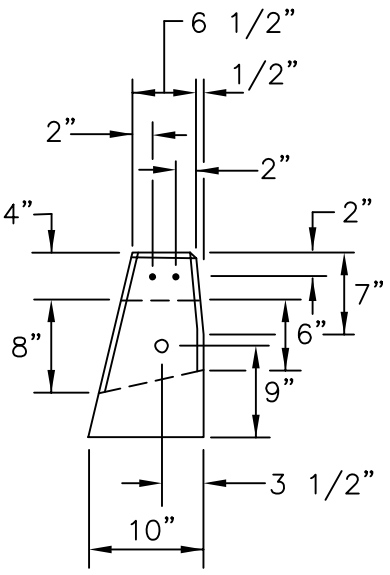

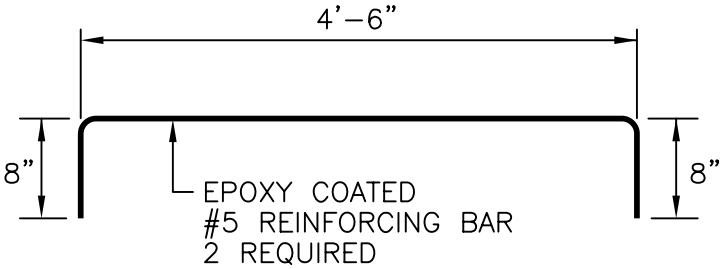

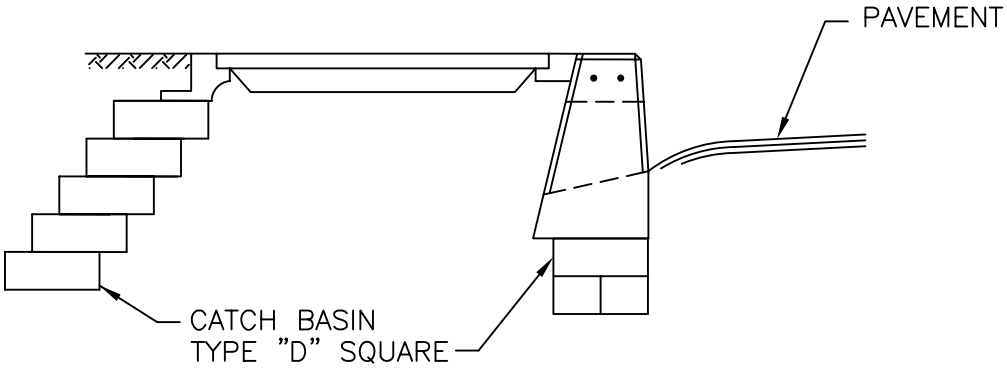

NOTES:
1. SHALL BE IN ACCORDANCE WITH SECTION 906 OF THE R.I. STANDARD SPECIFICATIONS.
2. EXPOSED SURFACES TO HAVE A SPONGE FLOAT FINISH.
3. EXPOSED EDGES TO HAVE A 3/4" CHAMFER.

RHODE ISLAND DEPARTMENT OF TRANSPORTATION

REVISIONS		
NO.	BY	DATE
1	MLP	Mar 05

PRECAST CONCRETE INLET STONE
(FOR SQUARE CATCH BASIN)

CHIEF ENGINEER TRANSPORTATION

CHIEF DESIGN ENGINEER TRANSPORTATION

JUNE 15, 1998
ISSUE DATE

R.I. STANDARD 7.1.5

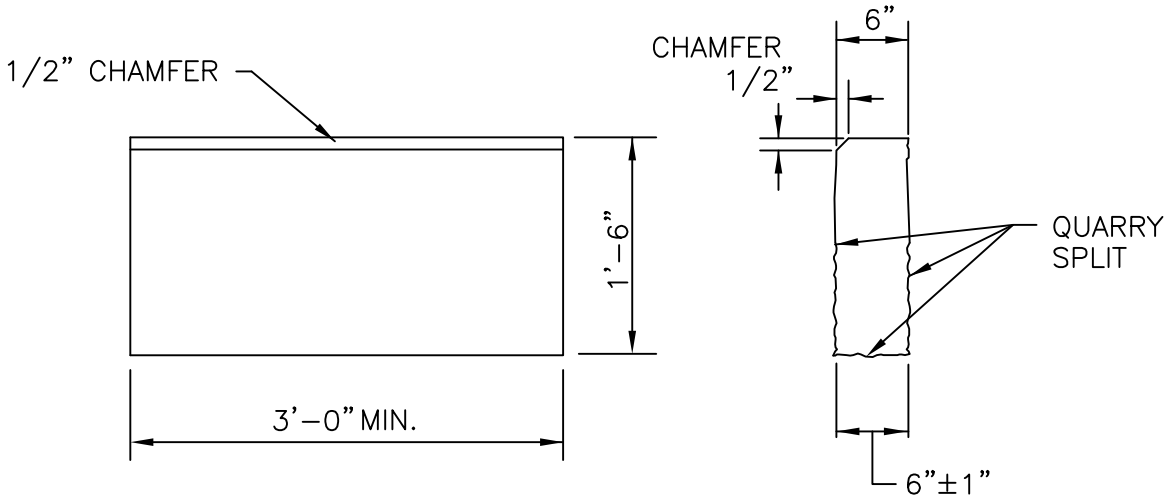

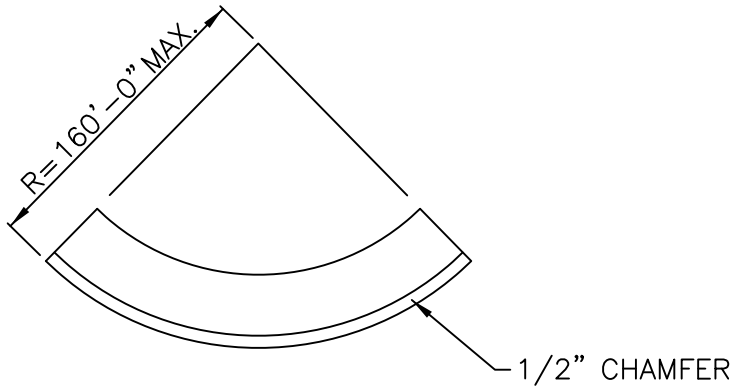

CIRCULAR CURB

NOTES:

1. SHALL BE IN ACCORDANCE WITH SECTION 906 OF THE R.I. STANDARD SPECIFICATIONS.
2. TOP SURFACE TO BE DRESSED BY SAW. REMAINDER MAY BE QUARRY SPLIT.
3. MINIMUM LENGTH OF STRAIGHT OR CIRCULAR PIECES TO BE 3'-0".
4. CIRCULAR CURB IS REQUIRED ON CURVES WITH RADII OF 160'-0" OR LESS. STRAIGHT CURB TO BE USED ON CURVES OF MORE THAN 160'-0" RADIUS.

RHODE ISLAND DEPARTMENT OF TRANSPORTATION

REVISIONS		
NO.	BY	DATE
1	MLP	Mar 2005
2	MLP	Sep 2012

GRANITE CURB

CHIEF ENGINEER TRANSPORTATION

CHIEF DESIGN ENGINEER TRANSPORTATION

JUNE 15, 1998
ISSUE DATE

R.I. STANDARD 7.3.0

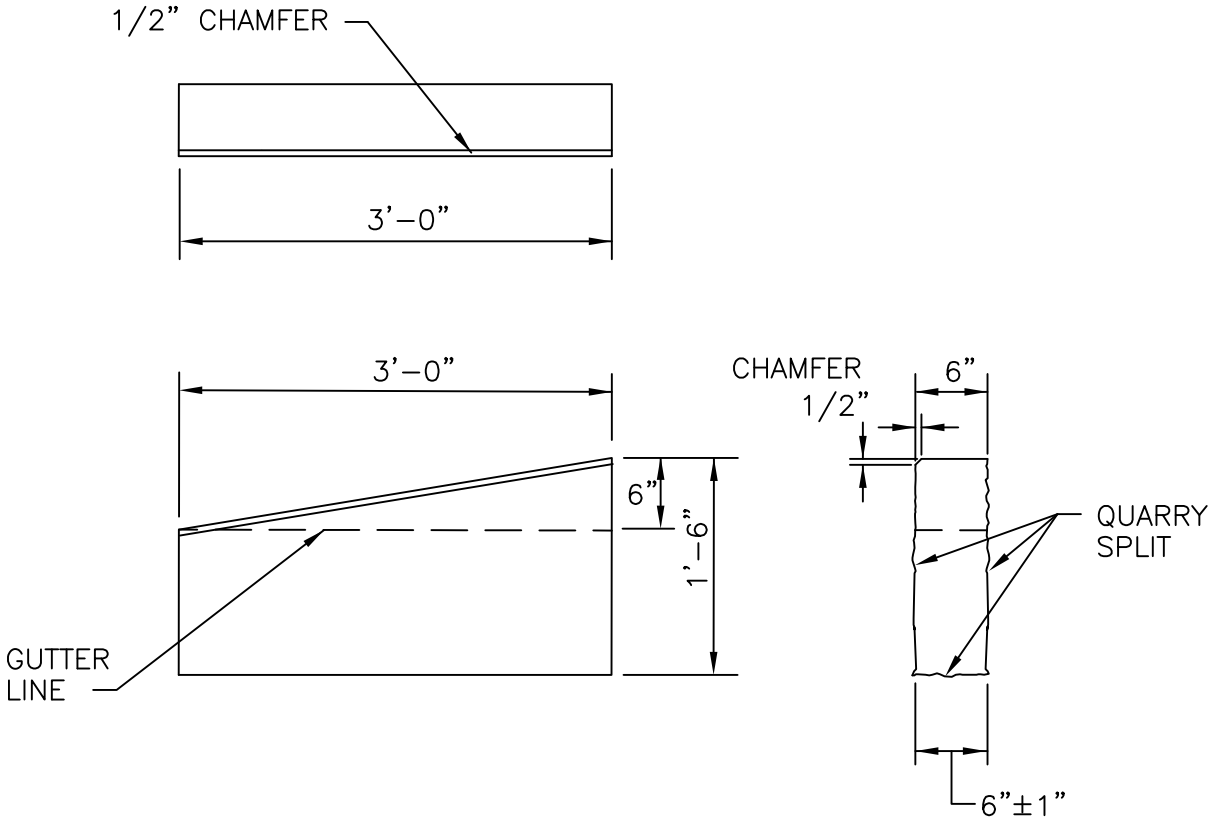

NOTES:
1. SHALL BE IN ACCORDANCE WITH SECTION 906 OF THE R.I. STANDARD SPECIFICATIONS.
2. TOP SURFACE TO BE DRESSED BY SAW. REMAINDER MAY BE QUARRY SPLIT.

RHODE ISLAND DEPARTMENT OF TRANSPORTATION

REVISIONS		
NO.	BY	DATE
1	MLP	Mar 2005
2	MLP	Jun 2010
3	MLP	Sep 2012

3'–0" GRANITE TRANSITION CURB

CHIEF ENGINEER TRANSPORTATION

CHIEF DESIGN ENGINEER TRANSPORTATION

JUNE 15, 1998
ISSUE DATE

R.I. STANDARD 7.3.1

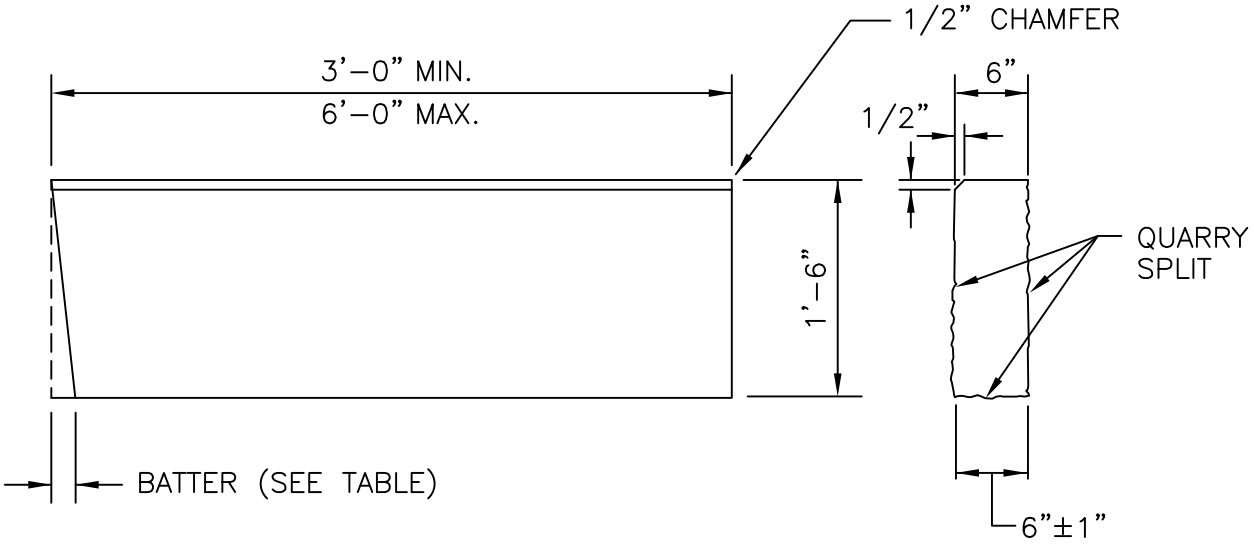

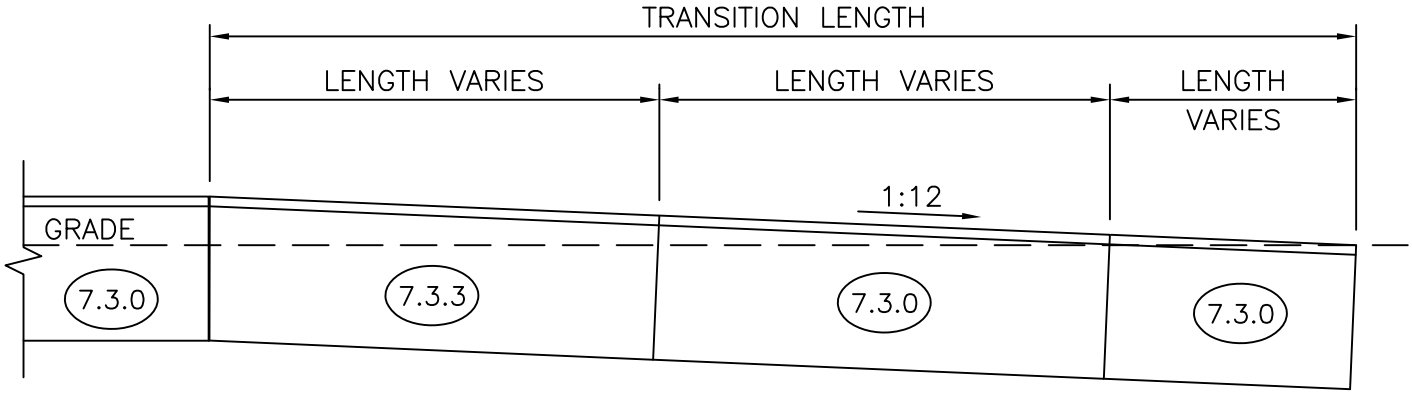

TRANSITION LENGTH (FT.)	BATTER (IN.)
6.0	1.5
7.0	1.3
8.0	1.2
9.5	1.0
11.5	0.8
15.0	0.6
18.0	0.5

NOTES:
1. SHALL BE IN ACCORDANCE WITH SECTION 906 OF THE R.I. STANDARD SPECIFICATIONS.
2. THE CONTRACTOR MAY CUT EXISTING CURB SECTIONS AS REQUIRED TO MEET THIS DETAIL AND THE R.I. STANDARD SPECIFICATIONS, WHERE OLD CURBING IS BEING REUSED.
3. MINIMUM LENGTH OF STRAIGHT OR CIRCULAR CURB FILLER PIECES TO BE 3'-0" (GREATER LENGTHS PREFERRED).
4. TOP SURFACE TO BE DRESSED BY SAW. REMAINDER MAY BE QUARRY SPLIT.

RHODE ISLAND DEPARTMENT OF TRANSPORTATION

REVISIONS		
NO.	BY	DATE
1	MLP	Mar 2005
2	MLP	Jun 2012

GRANITE WHEELCHAIR RAMP TRANSITION CURB

CHIEF ENGINEER TRANSPORTATION

CHIEF DESIGN ENGINEER TRANSPORTATION

JUNE 15, 1998
ISSUE DATE

R.I. STANDARD 7.3.3

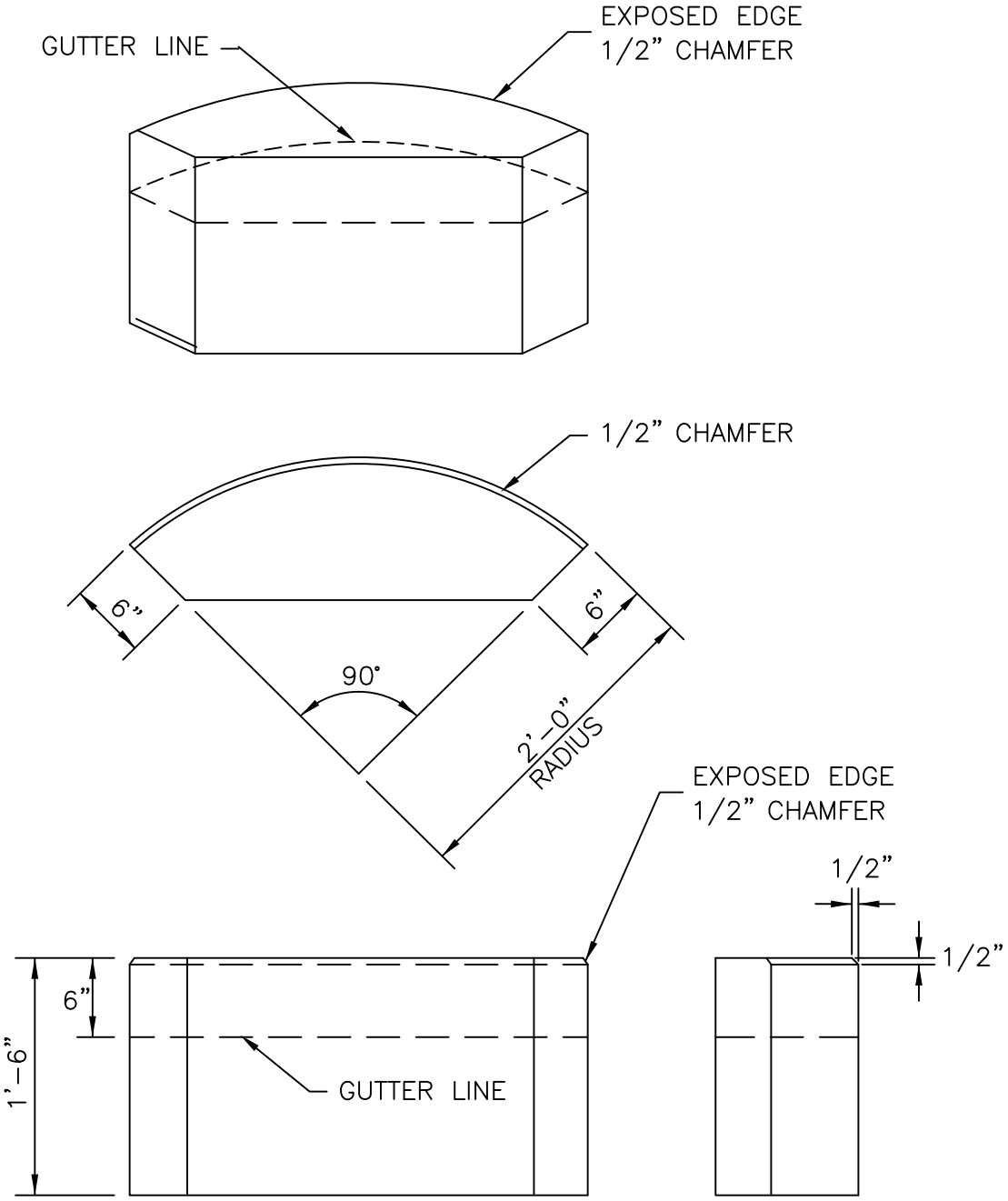

NOTES:
1. SHALL BE IN ACCORDANCE WITH SECTION 906 OF THE R.I. STANDARD SPECIFICATIONS.
2. TOP SURFACE TO BE DRESSED BY SAW. REMAINDER MAY BE QUARRY SPLIT.

RHODE ISLAND DEPARTMENT OF TRANSPORTATION

REVISIONS		
NO.	BY	DATE
1	MLP	Mar 2005
2	MLP	Sep 2012

GRANITE 2'-0" RADIUS CORNER

CHIEF ENGINEER TRANSPORTATION

CHIEF DESIGN ENGINEER TRANSPORTATION

JUNE 15, 1998
ISSUE DATE

R.I. STANDARD 7.3.4

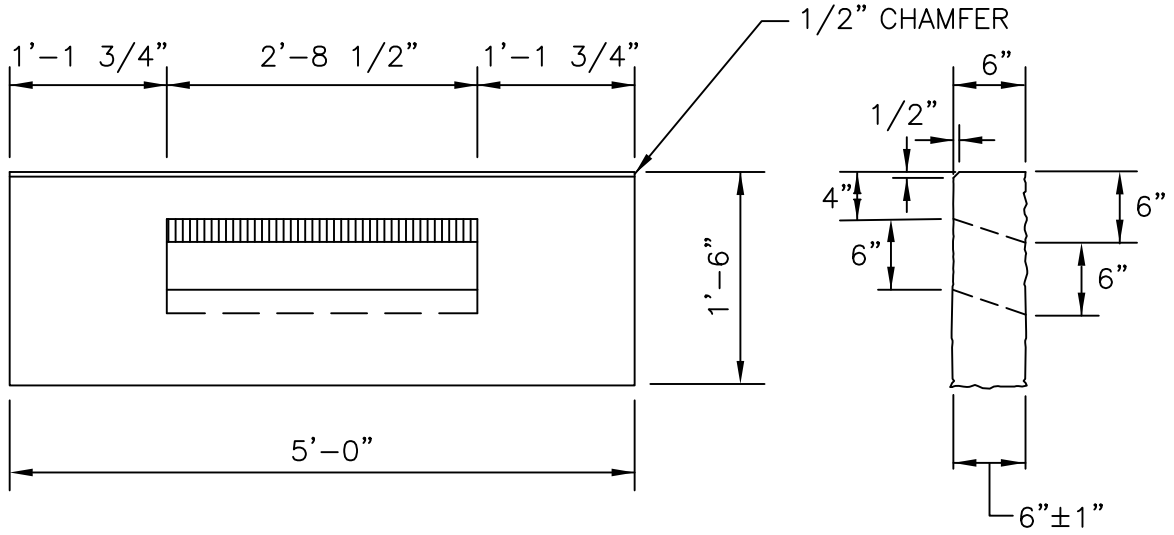

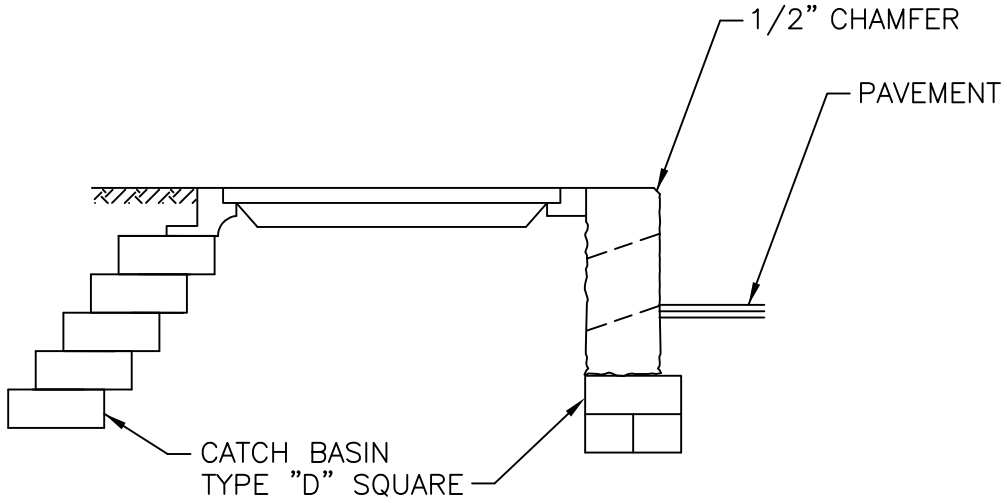

NOTES:
1. SHALL BE IN ACCORDANCE WITH SECTION 906 OF THE R.I. STANDARD SPECIFICATIONS.
2. TOP SURFACE TO BE DRESSED BY SAW. REMAINDER MAY BE QUARRY SPLIT.

RHODE ISLAND DEPARTMENT OF TRANSPORTATION

REVISIONS		
NO.	BY	DATE
1	MLP	Mar 2005
2	MLP	Sep 2012

GRANITE INLET STONE
(FOR SQUARE CATCH BASIN)

CHIEF ENGINEER TRANSPORTATION

CHIEF DESIGN ENGINEER TRANSPORTATION

JUNE 15, 1998
ISSUE DATE

R.I. STANDARD 7.3.5

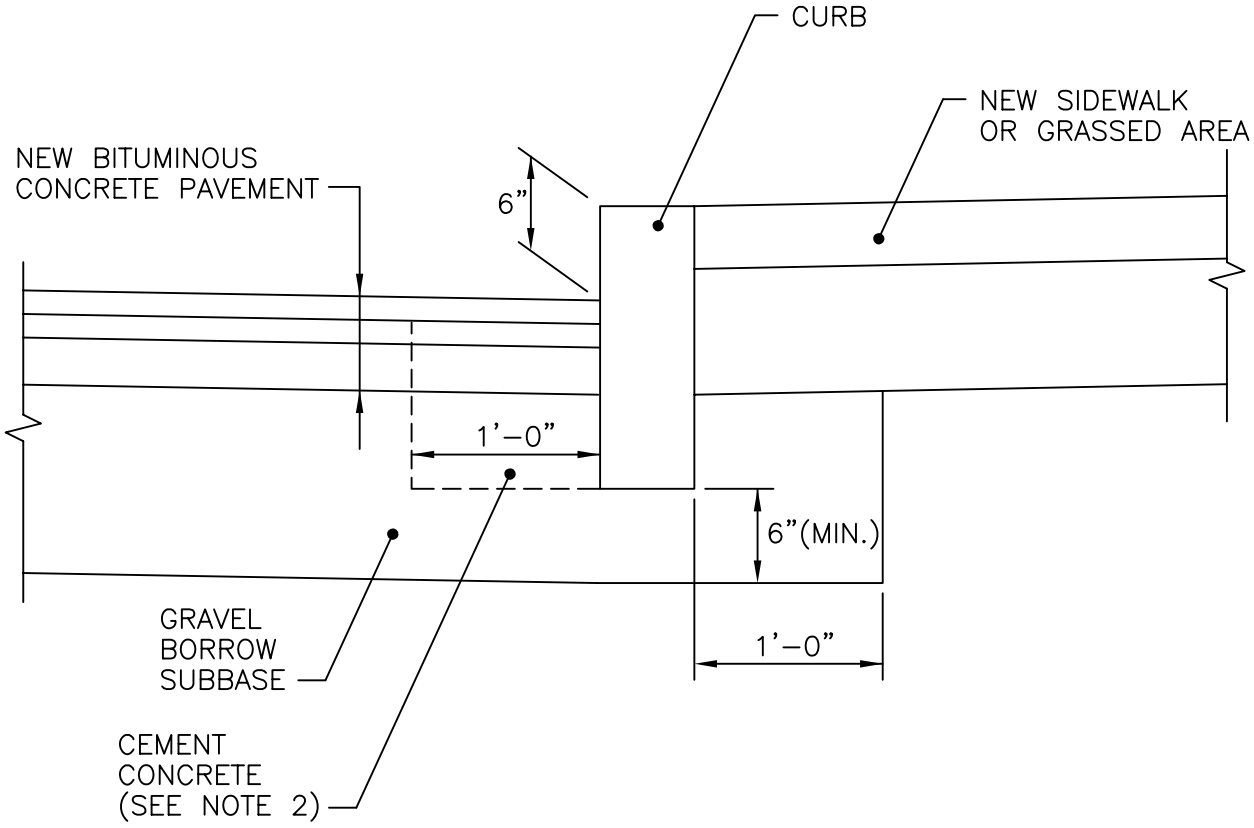

NOTES:

1. SHALL BE IN ACCORDANCE WITH SECTION 906 OF THE R.I. STANDARD SPECIFICATIONS.
2. CEMENT CONCRETE SHALL BE USED ONLY WHEN THE CURB IS SET AFTER THE BASE AND/OR BINDER COURSES ARE IN PLACE, OTHERWISE THE CEMENT CONCRETE WILL BE ELIMINATED AND THE GRAVEL BROUGHT UP TO BOTTOM OF THE BASE COURSE.

RHODE ISLAND DEPARTMENT OF TRANSPORTATION

REVISIONS		
NO.	BY	DATE
1	MLP	Mar 05

CURB SETTING DETAIL

CHIEF ENGINEER TRANSPORTATION

CHIEF DESIGN ENGINEER TRANSPORTATION

JUNE 15, 1998
ISSUE DATE

R.I. STANDARD 7.6.0

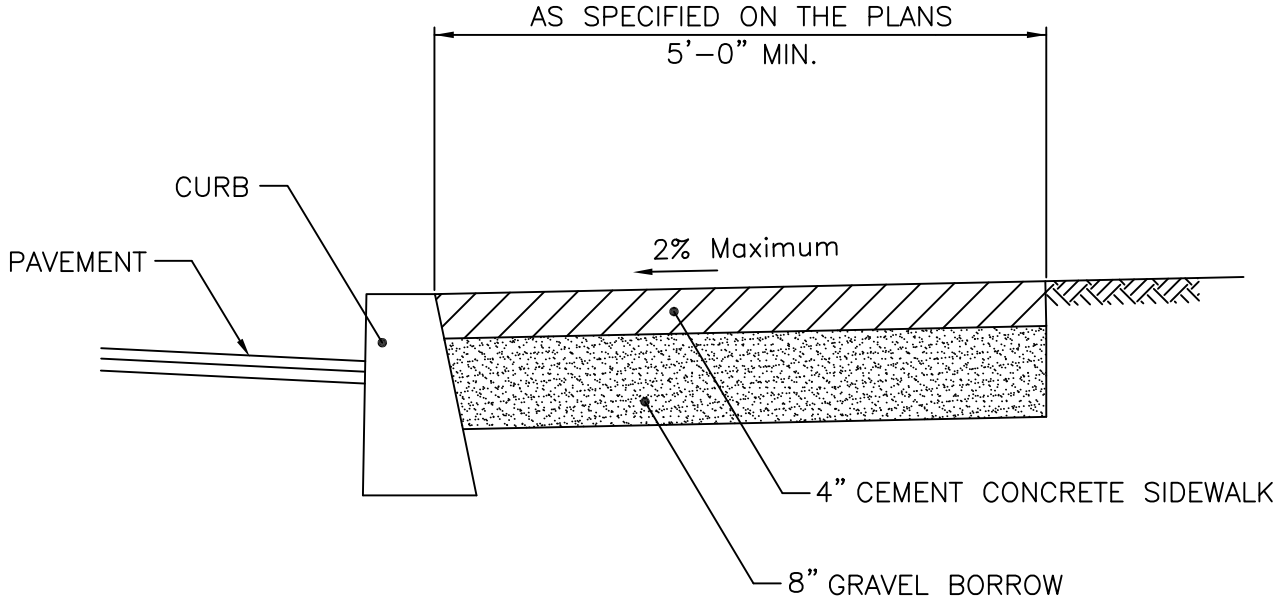

NOTES

1. SHALL BE IN ACCORDANCE WITH SECTION 905 OF THE R.I. STANDARD SPECIFICATIONS.
2. FOR CURB SETTING DETAIL REFERENCE STD. 7.6.0.

RHODE ISLAND DEPARTMENT OF TRANSPORTATION

REVISIONS		
NO.	BY	DATE
1	MLP	3/1/05
2	MLP	06/01/10

CEMENT CONCRETE SIDEWALK

CHIEF ENGINEER TRANSPORTATION

CHIEF DESIGN ENGINEER TRANSPORTATION

JUNE 15, 1998
ISSUE DATE

R.I. STANDARD 43.1.0

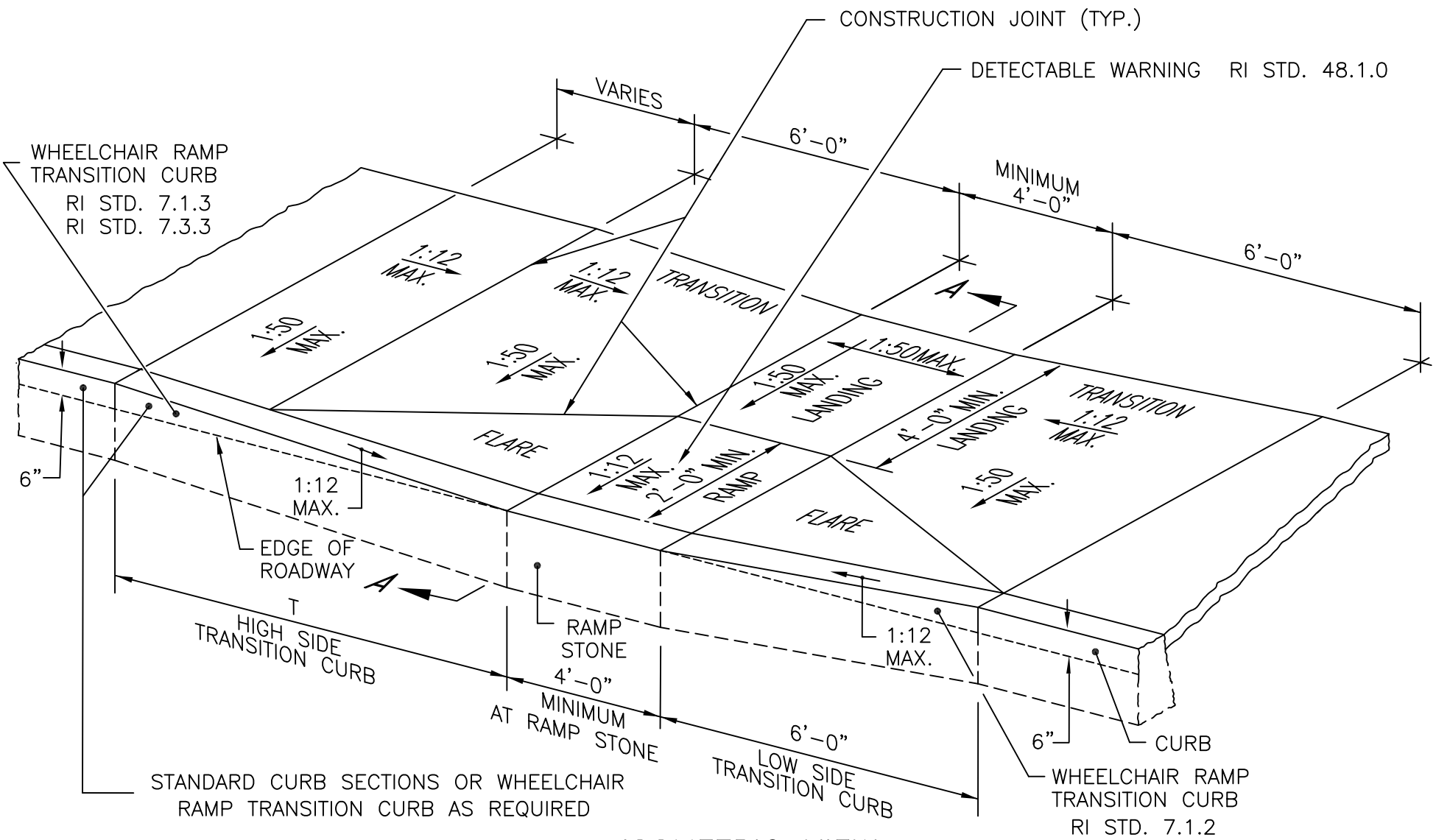

ISOMETRIC VIEW
NOT TO SCALE

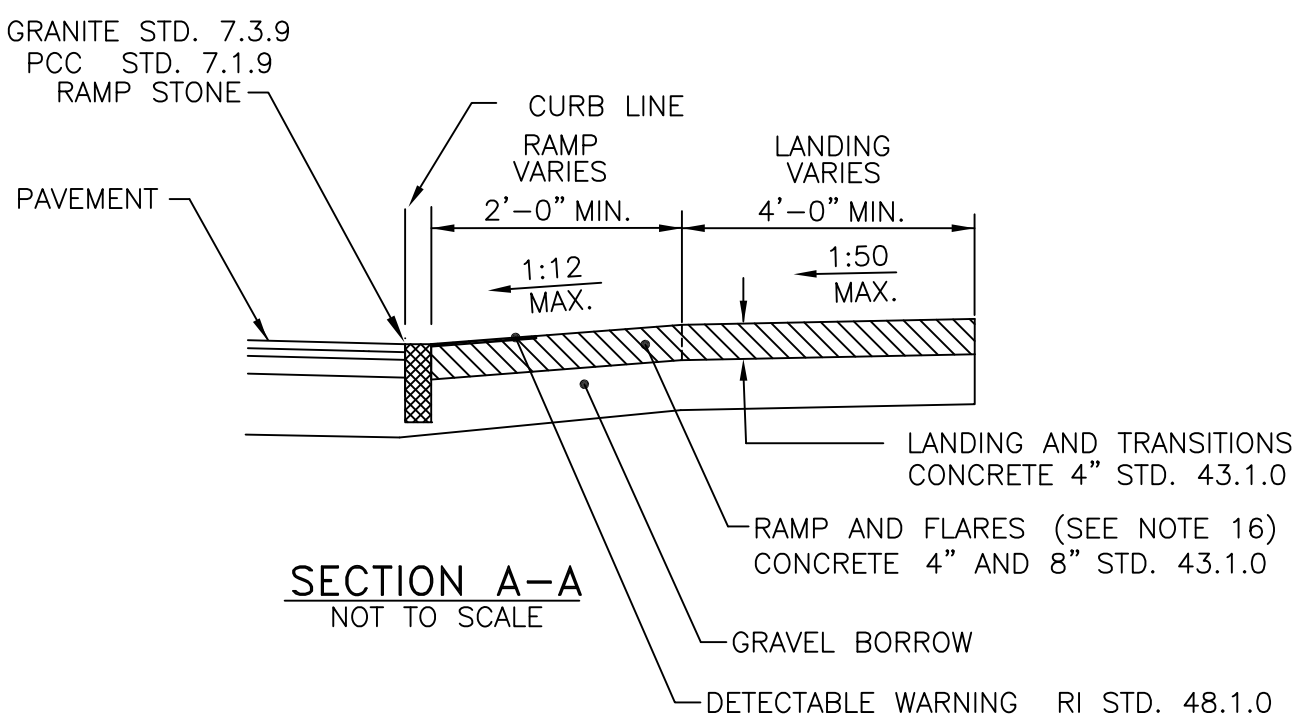

SECTION A–A
NOT TO SCALE

ROADWAY PROFILE GRADE	T (FT.)
0.00	6.0
0.01	7.0
0.02	8.0
0.03	9.5
0.04	11.5
0.05	15.0

NOTES:

1. SHALL BE IN ACCORDANCE WITH SECTION 905 OF THE RI STANDARD SPECIFICATIONS.
2. WHEN ANY OBSTRUCTION LOCATED IN THE SIDEWALK FALLS WITHIN A CROSSWALK AREA, THE WHEELCHAIR RAMP SHALL BE PLACED SUCH THAT THE OBSTRUCTION FALLS OUTSIDE OF THE RAMP.
3. AT NO TIME IS ANY PART OF THE WHEELCHAIR RAMP TO BE LOCATED OUTSIDE OF THE CROSSWALK, AND IT IS TO BE CENTERED WHENEVER POSSIBLE.
4. DRAINAGE FACILITIES ARE TO BE LOCATED UP–GRADE OF ALL WHEELCHAIR RAMPS.
5. LOCATION OF WHEELCHAIR RAMPS IS AS SHOWN ON CONTRACT DRAWINGS.
6. IN NO INSTANCE SHALL THE SIDEWALK CROSS SLOPE EXCEED 1:50 EXCEPT WITHIN THE RAMP AREA.
7. AN UNOBSTRUCTED PATH OF TRAVEL WITH A MINIMUM WIDTH OF 4'–0" SHALL BE MAINTAINED.
8. THE WHEELCHAIR RAMP SLOPE AND SIDE SLOPES (TRANSITIONS), MUST NOT BE STEEPER THAN 1:12. HOWEVER, THESE SLOPES MAY BE FLATTER THAN 1:12 WHEN WARRANTED BY SURROUNDING CONDITIONS.
9. WHERE THE ROAD PROFILE EXCEEDS 5% THE HIGH SIDE TRANSITION LENGTH (T) SHALL BE EIGHTEEN FEET (18'–0").
10. IN NO CASE, WHERE A STOP LINE IS WARRANTED, SHALL A RAMP BE PLACED BEHIND THE STOP LINE.
11. THE ENTRANCE OF THE WHEELCHAIR RAMP SHALL BE FLUSH WITH THE ROADWAY.
12. THE WHEELCHAIR RAMP SHALL BE CENTERED RADIALLY, OPPOSITE THE RADIUS POINT WHEN POSSIBLE.
13. MINIMUM LENGTH OF STRAIGHT OR CIRCULAR FILLER PIECES TO BE 3'–0" (GREATER LENGTHS PREFERRED).
14. ALL REQUIRED CUTTING OF CURB PIECES TO BE PAID FOR UNDER COST OF CURB.
15. DETECTABLE WARNINGS TO BE PAID FOR UNDER SECTION 942 OF THE RI STANDARD SPECIFICATIONS
16. 8" CONCRETE DEPTH FOR RADIUS WHEELCHAIR RAMPS ONLY. USE 4" DEPTH FOR TANGENT (MID–BLOCK) LOCATIONS.

RHODE ISLAND DEPARTMENT OF TRANSPORTATION

REVISIONS		
NO.	BY	DATE
1	MLP	Oct 2005
2	MLP	Jun 2008
3	MLP	Sep 2012

WHEELCHAIR RAMP

CHIEF ENGINEER TRANSPORTATION

CHIEF DESIGN ENGINEER TRANSPORTATION

JUNE 15, 1998
ISSUE DATE

R.I. STANDARD 43.3.0

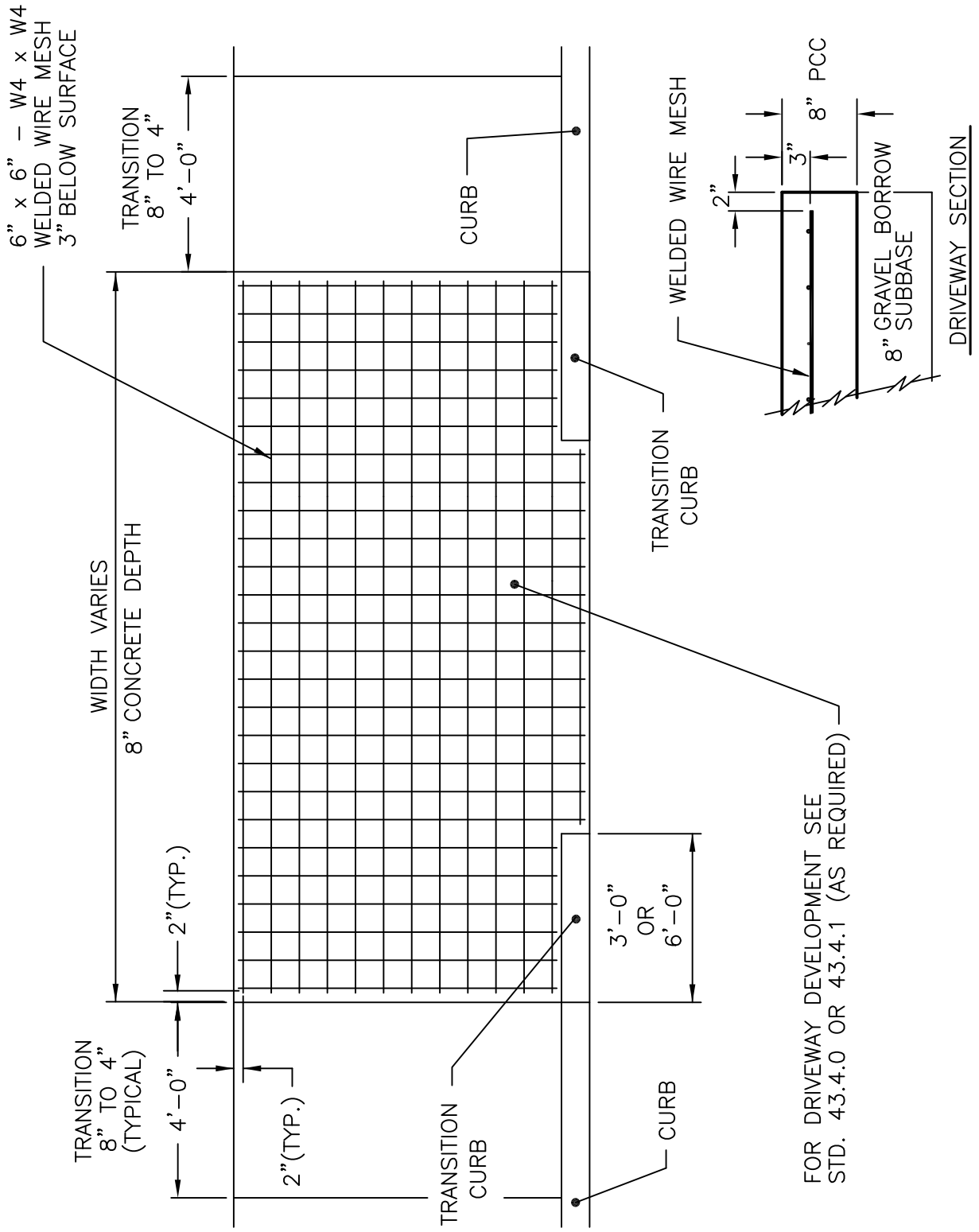

NOTE:
SHALL BE IN ACCORDANCE WITH SECTION 905 OF THE R.I. STANDARD SPECIFICATIONS.

RHODE ISLAND DEPARTMENT OF TRANSPORTATION

REVISIONS		
NO.	BY	DATE
1	MLP	1/10/05
2	MLP	7/21/06
3	MLP	6/01/10

CEMENT CONCRETE DRIVEWAYS

CHIEF ENGINEER
TRANSPORTATION

CHIEF DESIGN ENGINEER
TRANSPORTATION

JUNE 15, 1998
ISSUE DATE

R.I. STANDARD
43.5.0

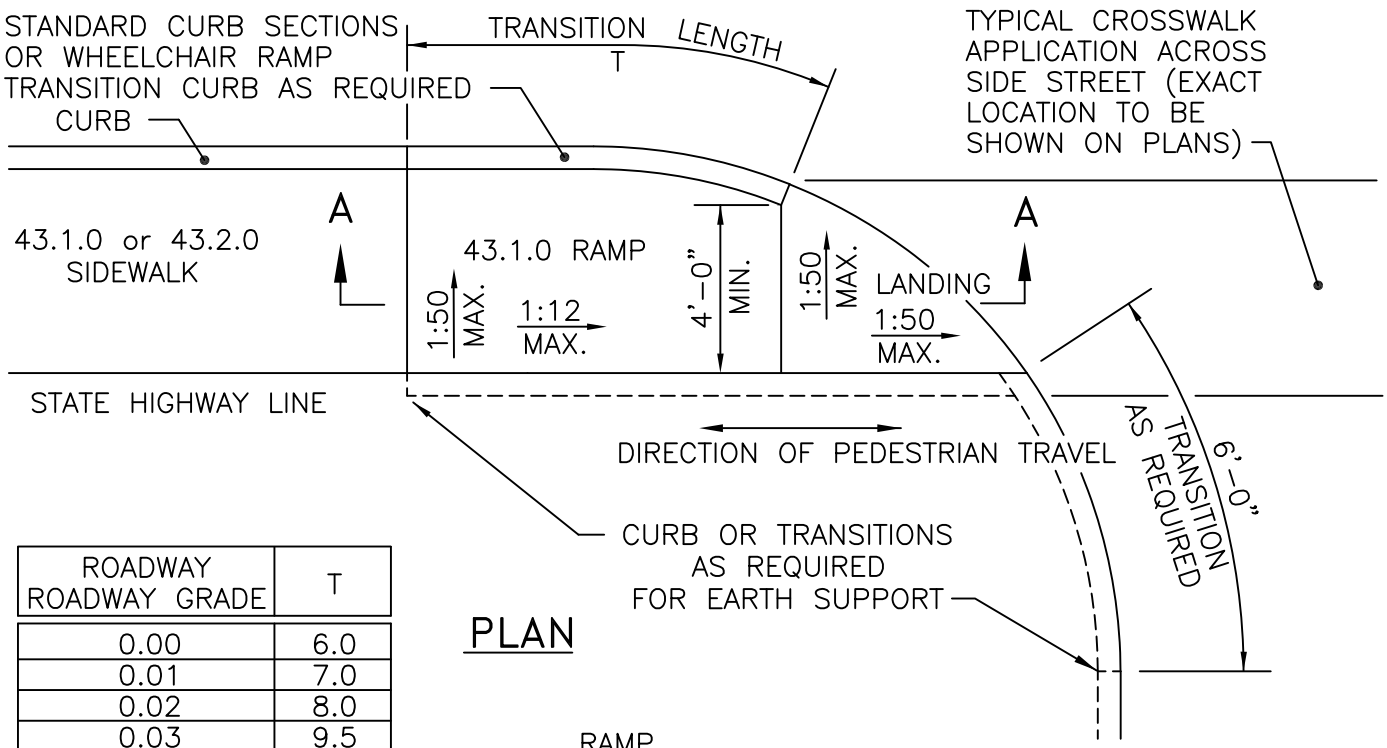

PLAN

ROADWAY ROADWAY GRADE	T
0.00	6.0
0.01	7.0
0.02	8.0
0.03	9.5
0.04	11.5
0.05	15.0

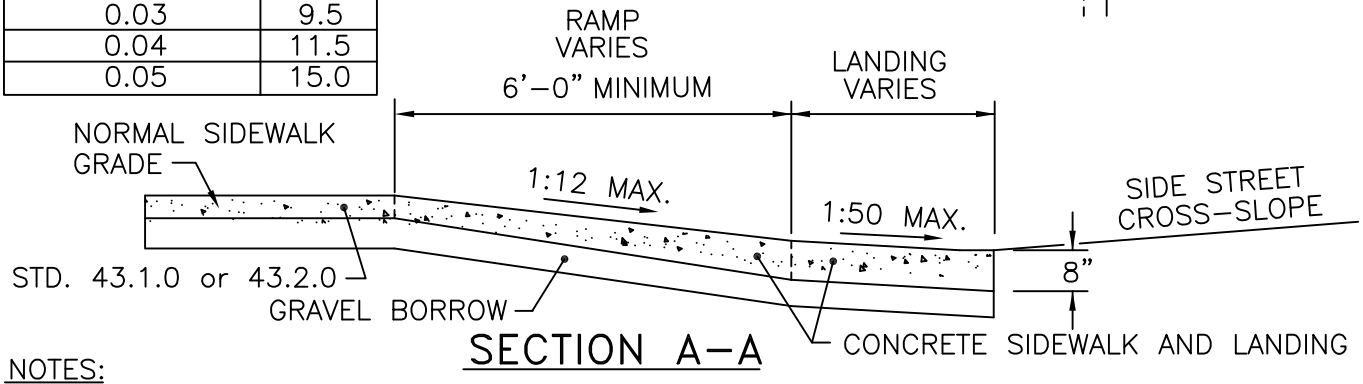

SECTION A–A

NOTES:

1. SHALL BE IN ACCORDANCE WITH SECTION 905 OF THE R.I. STANDARD SPECIFICATIONS.
2. THIS DETAIL IS TO BE USED ONLY WHEN STATE RIGHT–OF–WAY IS LIMITED TO BACK OF SIDEWALK, AND SIDEWALK IS NARROW WITH NO PEDESTRIAN TRAFFIC FROM SIDE STREET.
3. WHEN ANY OBSTRUCTION LOCATED IN THE SIDEWALK FALLS WITHIN A CROSSWALK AREA, IF POSSIBLE, THE OBSTRUCTION SHALL BE PLACED SUCH THAT IT FALLS OUTSIDE OF THE RAMP.
4. AT NO TIME IS ANY PART OF THE WHEELCHAIR RAMP TO BE LOCATED OUTSIDE OF THE CROSSWALK, AND IT IS TO BE CENTERED WHENEVER POSSIBLE.
5. DRAINAGE FACILITIES ARE TO BE LOCATED UP–GRADE OF ALL WHEELCHAIR RAMPS.
6. LOCATION OF WHEELCHAIR RAMPS IS AS SHOWN ON CONTRACT DRAWINGS.
7. ALL REQUIRED CUTTING OF CURB PIECES TO BE PAID FOR UNDER COST OF CURB.
8. WHERE THE ROAD PROFILE EXCEEDS 5% THE TRANSITION LENGTH (T) SHALL BE EIGHTEEN FEET (18'–0").
9. THE ENTRANCE OF THE WHEELCHAIR RAMP SHALL BE FLUSH WITH THE ROADWAY.
10. MINIMUM LENGTH OF STRAIGHT OR CIRCULAR FILLER PIECES TO BE 3'–0"(GREATER LENGTHS PREFERRED).
11. AN UNOBSTRUCTED PATH OF TRAVEL WITH A MINIMUM WIDTH OF 4'–0" SHALL BE MAINTAINED.

RHODE ISLAND DEPARTMENT OF TRANSPORTATION

REVISIONS		
NO.	BY	DATE
1	MLP	Dec 2005
2	MLP	Sep 2012

WHEELCHAIR RAMP FOR LIMITED RIGHT–OF–WAY AREAS

CHIEF ENGINEER TRANSPORTATION

CHIEF DESIGN ENGINEER TRANSPORTATION

JUNE 15, 1998
ISSUE DATE

R.I. STANDARD 43.3.1

Appendix F

Brick Industry Association Technical Notes 14 and 14A

THE BRICK INDUSTRY ASSOCIATION
TECHNICAL NOTES on Brick Construction
1850 Centennial Park Drive, Reston, Virginia 20191 | www.gobrick.com | 703-620-0010
14
March 2007

Paving Systems Using Clay Pavers

Abstract: This *Technical Note* presents an overview of paving systems made with clay pavers used in pedestrian and vehicular, residential and nonresidential projects. Commonly used systems that include clay pavers are discussed, and guidance is given in selecting the appropriate clay paver, setting bed and base. Site conditions and project requirements that may affect choice are discussed, including subgrade soil, pedestrian and vehicular traffic, accessibility requirements, drainage, and appearance.

Key Words: base, design, flexible, mortared paving, mortarless paving, paving, permeable paving, rigid, subbase.

SUMMARY OF RECOMMENDATIONS:

Select Paving System

- Use Table 1 to determine paving system based on application
- Use Table 2 to evaluate clay paving systems based on their general advantages and disadvantages
- Use Table 3 to verify choice of the clay paving system for specific site conditions and project requirements

Design Paving System

- Use *Technical Note* 14 for design considerations and general specification of clay pavers, base and subbase
- Use appropriate *Technical Note* in this series to provide design and construction information specific to the setting bed of the paving system selected as follows:
  - Sand Setting Bed – *Technical Note* 14A
  - Bituminous Setting Bed – *Technical Note* 14B
  - Mortar Setting Bed – *Technical Note* 14C
- Use a design professional as necessary to verify suitability of a paving system design

INTRODUCTION

Technical Note 14 is the first in a series discussing the use of clay pavers for pedestrian and vehicular, residential and nonresidential applications (see Photo 1). It provides guidance in selecting a paving system (see Figure 1) and the appropriate clay paver, setting bed and base. Once these are determined, other *Technical Notes* in this series provide additional information specific to the setting bed chosen, including common construction for particular applications, typical details, installation practices and maintenance.

Paving systems exposed to more than 251 daily equivalent single axle loads (ESAL) from trucks or combination vehicles having three or more loaded axles are considered heavy duty vehicular applications. Such paving

Photo 1
Pedestrian Plaza with Clay Pavers

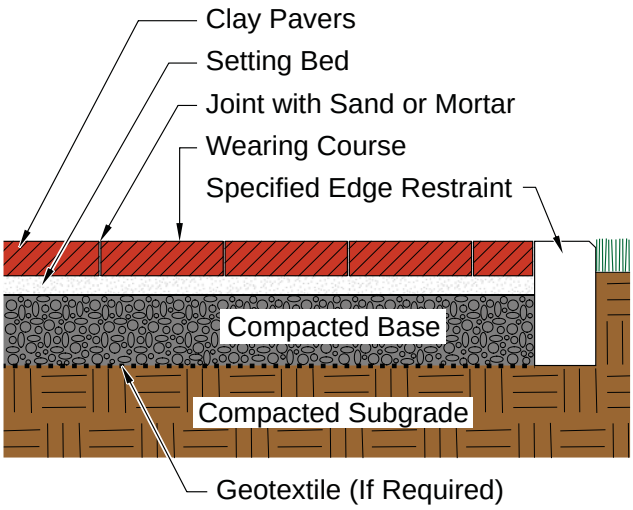

Figure 1
Typical Pavement Section

© 2007 Brick Industry Association, Reston, Virginia

systems are beyond the scope of this *Technical Note* series. For more information on paving systems for heavy duty vehicular use, refer to *Flexible Vehicular Brick Paving – A Heavy Duty Applications Guide* [Ref. 14].

Table 1 lists acceptable paving systems for typical paving applications. Table 2 is a comparison of paving systems listing the general advantages and disadvantages for each system. Table 3 indicates which paving systems are appropriate for specific site conditions and project requirements.

TABLE 1
Acceptable Paving Systems

Application	Typical Examples	Sand Setting Bed				Bituminous Setting Bed		Mortar Setting Bed	
								Bonded	Unbonded
		Aggregate Base	Asphalt Base[1]	Cement-Treated Aggregate Base	Concrete Base[1]	Asphalt Base[1]	Concrete Base[1]	Concrete Base[1]	Concrete Base[1]
Residential	Patios and walks on property of a one- or two-family house or townhouse	A	A	A	A	A	A	A	A
	Driveways on property of a one- or two-family house or townhouse	A	A	A	A	A	A	A	NA
Commercial/ Pedestrian	Public plazas, courtyards or sidewalks	A	A	A	A	A	A	A	A
Light Duty Vehicular[3]	Paving with low volume[2] of heavy vehicles such as streets, parking areas, turn-arounds or passenger drop-offs	A	A	A	A	A	A	A	NA
Heavy Duty Vehicular[3]	Paving with a high volume[2] of heavy vehicles such as streets, commercial driveways or crosswalks across them	Refer to *Flexible Vehicular Brick Paving - A Heavy Duty Applications Guide*							

NOTES:
1. For a paving system that uses existing asphalt or concrete as base, verify that the condition of the base is acceptable.
2. For a definition of high volume of heavy vehicles, see Introduction.
3. For these applications, a design professional should design the paving system.

KEY:
A = Acceptable
NA = Not Acceptable

TABLE 2
Comparison of Pavements Made with Clay Pavers

Clay Pavers On:	Advantages	Disadvantages
Sand Setting Bed on Aggregate Base	• Most durable • Cost-effective • Easy access to repair underground utilities • Good as overlay to existing asphalt or concrete pavement • Allows use of semi-skilled labor • Can be designed as a permeable pavement	• Intensive cleaning may erode joint sand • May require a thicker base
Sand Setting Bed on Asphalt Base	• Good as overlay to existing asphalt pavement	• Intensive cleaning may erode joint sand
Sand Setting Bed on Cement-Treated Aggregate Base	• Good over poor soils or in small, confined areas • Good as overlay to existing concrete pavement	• Intensive cleaning may erode joint sand
Sand Setting Bed on Concrete Base	• Good over poor soils or in small, confined areas • Good as overlay to existing concrete pavement	• Intensive cleaning may erode joint sand • Requires good drainage above base • Susceptible to greater offset with subgrade movement
Bituminous Setting Bed on Asphalt Base	• Reduced horizontal movement and uplift • Enhanced water penetration resistance	• Repairs are more difficult and expensive • Little tolerance for paver thickness variations or inaccurate base elevations
Bituminous Setting Bed on Concrete Base	• Reduced horizontal movement and uplift • Enhanced water penetration resistance • Good over poor soils or in small, confined areas	• Repairs are more difficult and expensive • Little tolerance for paver thickness variations or inaccurate base elevations
Mortar Setting Bed Bonded to Concrete Base	• Greater tolerance for paver thickness variations or inaccurate base elevations • Can be used on steeper slopes and greater vehicle speeds • Drainage occurs on the surface	• Movement joints must align through entire paving system • Least cost-effective • Mortar joint maintenance required • Repairs are most difficult and expensive
Mortar Setting Bed Unbonded to Concrete Base	• Greater tolerance for paver thickness variations or inaccurate base elevations • Movement joints in setting bed and base are not required to align • Preferred when used over elevated structural slab	• Bond break must be used to avoid stresses caused by horizontal movement between layers • Least cost-effective • Mortar joint maintenance required • Repairs are most difficult and expensive

TABLE 3
Selection of Setting Bed and Base

Site Condition or Project Requirement	Sand Setting Bed				Bituminous Setting Bed		Mortar Setting Bed	
							Bonded	Unbonded
	Aggregate Base	Asphalt Base	Cement-Treated Aggregate Base	Concrete Base	Asphalt Base	Concrete Base	Concrete Base	Concrete Base
Soft Soil in Subgrade	R	R	A	A	R	A	A	A
Tree Roots in/near Subgrade	R	A	NA	NA	A	NA	NA	NA
Expansive Soil in Subgrade	A[1]	R	A	NA	R	NA	NA	NA
Snow Melt System	A[2]	A[2]	A[2]	R[2]	A[1]	NA	R	R
Suspended Structural Slab	A[1]	NA	A[1]	R[1]	NA	R[1]	R	R
Good Surface Drainage	R	R	R	R	R	R	R	R
Poor Surface Drainage	R	R	R	R	R	R	NA	NA
Permeable Pavement	R	NA	NA	NA	NA	NA	NA	NA
Deep Frost Line	R[1]	R[1]	R[1]	R[1]	A[1]	A[1]	A	A
Freeze/Thaw	R[1]	R[1]	R[1]	R[1]	A[1]	A[1]	A	NA
Minimal Frosts	R	R	R	R	R	R	R	R
Pressure Washing	R[1]	R[1]	R[1]	R[1]	R[1]	R[1]	R	R
Vacuuming	R[1]	R[1]	R[1]	R[1]	R[1]	R[1]	R	R
Minimal Cleaning	R	R	R	R	R	R	R	R
ADA Compliance	R	R	R	R	R	R	A	A
Pedestrians Only	R	R	R	R	R	R	R	R
Light Vehicular Traffic	R[3]	R[3]	R[3]	R[3]	R[3]	R[3]	R	NA

NOTES:
1. Use stabilized joint sand
2. When snow melt system is in sand setting bed, use stabilized sand in setting bed.
3. Use Application PS or PX pavers

KEY:
R = Recommended
A = Acceptable
NA = Not Acceptable

DESIGN CONSIDERATIONS

Aesthetics

The relatively small size of clay pavers creates a pavement surface with a human scale. As many pavers can be observed simultaneously, the nuances of different colors, textures and patterns can be clearly seen when standing on the pavement. Single colors can present a monolithic appearance. Multiple colors can break down the scale of the pavement (see Photo 2). Borders laid in a different color can add interest to the pavement. In larger areas, it may be desirable to introduce different colors in the form of bands or panels. Some highly decorative pavements have introduced patterns that flow, repeat and intertwine (see Figure 2).

Photo 2
Multiple Colors Affect Pavement Scale

Color. Clay pavers are available in a wide range of colors. The most common are red and brown earth tones, but buff and gray colors also are produced

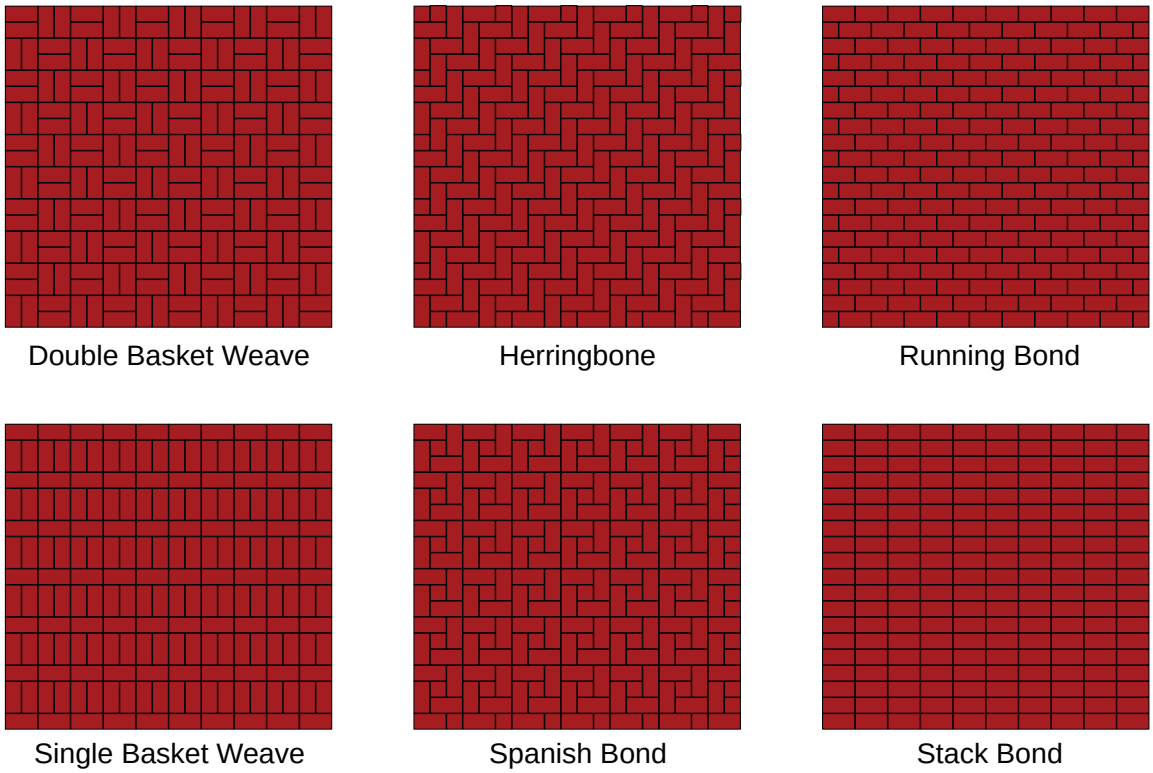

Figure 2
Brick Paving Bond Patterns

(see Photo 3). Single colors as well as variegated pavers can also be mixed together to form blends that expand the palette of available colors.

The color of clay pavers is typically consistent through the body of the paver and is highly resistant to weathering and fading because of its vitrified composition. Since clay pavers are made from natural materials, there may be some inherent color variations between different production runs from the same manufacturer. This is most evident in large paved areas of a single color. Using a field panel to establish acceptable color variations and laying pavers taken from different cubes of pavers helps avoid this issue.

Texture. Clay pavers are available with a range of surface textures, such as wire cut and molded. Viewed at a flat angle from a distance, a variation in paver texture can be more obvious than a variation in color. Designers may find it advantageous to change the surface texture in different areas or bands to exaggerate the contrast. The texture also has an impact on slip and skid resistance.

Photo 3
Clay Paver Colors

Some pavers are manufactured with a more pronounced texture or surface pattern. Surface features — including a grid of dimples or domes — also can be imprinted into the surface of the paver before firing. Pavers also can be manufactured and installed to provide a tactile/detectable warning surface. In addition, patterns and words can be engraved or laser etched into the surface of fired pavers.

Edge Treatment. Pavement texture is created not only by the character of the texture of each paver, but also by the treatment of the edges. Pavers can have square edges, rounded edges or beveled edges formed during the extrusion, molding or pressing processes. These can be uniform along the entire edge of the paver, which enhances the uniformity of the surface, or they can be made to be variable or irregular to create the feel of a historic pavement. Additionally, fired pavers can be tumbled to create distressed edges.

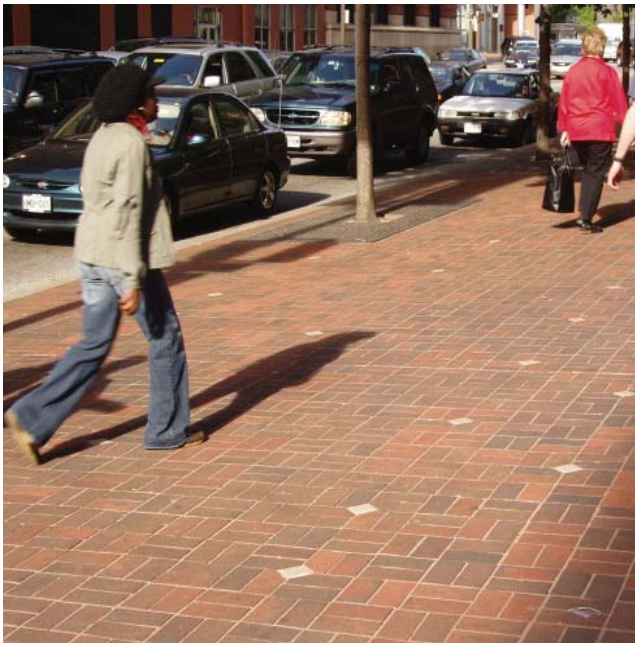

Photo 4
Clay Paver Sidewalk in Basket Weave Pattern

Pavement use and maintenance should be considered when selecting the edge treatment of pavers, as they may affect the appearance or smoothness of the paving surface. When square-edge pavers are laid with sand joints, care should be taken to ensure that they do not make direct contact with or lip under adjacent pavers. A minimum of 1/16 in. sand-filled joint should separate each clay paver. Maintaining full sand joints and taking care not to distress paver edges during snow removal procedures helps minimize potential chippage of a paver's edges. Using clay pavers with chamfers enhances drainage by channeling water away from the surface, which can improve skid resistance.

Bond Patterns. Many installation patterns can be used when laying clay pavers. Some of the most popular are herringbone bond, running bond, stack bond and basket weave, as shown in Photo 4. When choosing a pattern, considerations should include the setting bed of the pavement and the horizontal loads. Vehicle loads typically generate the largest horizontal load on a pavement. Sand and bituminous setting beds are more prone to paver creep, or horizontal movement. A herringbone bond best distributes horizontal forces across a pavement, reducing the potential for creep. Running bond and other patterns with continuous joints do not distribute horizontal loads as well as herringbone bond. If these bond patterns are used, continuous joints should be oriented perpendicular to the direction of traffic.

In some projects, different-colored pavers are arranged to create a pattern that aligns with adjacent features, such as building columns or trees. The size of different colored clay pavers may vary within permissible tolerances. Pavers supplied to a project may be slightly smaller or slightly larger than the specified sizes assumed in design. As such, the exact number of pavers that can be laid within a set dimension will vary unless the joint widths are slightly adjustable. Paving systems with sand or bituminous setting beds that are subject to vehicular applications can have their structural integrity reduced if joints are too wide. Therefore, the paver layout should be designed with a degree of flexibility to accommodate slight variations in the pattern. As necessary, cutting individual pavers also may be used to solve alignment and structural integrity issues.

Pedestrian Traffic

Paving systems using clay pavers exposed to pedestrian traffic for residential and nonresidential applications are common. Many residential patios and walks can be constructed with only a base layer between the subgrade and the setting bed. For more public pedestrian applications such as sidewalks and plazas, a more substantial paving system may be required.

Vehicular Traffic

Light vehicular traffic includes general access for cars and for trucks, but in smaller volumes. As stated in ASTM C 1272, high volumes of traffic are considered traffic with over 251 daily equivalent single loads (ESAL), a standard term used by pavement engineers. For further information about clay pavements subject to heavy vehicular traffic, refer to *Flexible Vehicular Brick Paving – A Heavy Duty Applications Guide* [Ref. 14].

The load capacity of a clay paving system with a sand setting bed and aggregate base is dependent on the total pavement section rather than just the clay paver layer. Most individual clay pavers have a high compressive strength and, with sufficient thickness, can develop significant interlock with surrounding pavers to support light vehicular loads when properly constructed. Sufficient thickness and compaction of subbase, base and paver layers virtually eliminates pavement deformation under loading.

For light duty vehicular paving systems, a maximum traffic speed of 30 mph (50 kph) is considered appropriate for pavers in a sand setting bed. As vehicle speeds increase, the horizontal loading caused by accelerating, braking and turning increases. Light duty vehicular clay paving systems with sand setting beds where a herringbone bond is used, where joint width is maintained between 1/16 to 3/16 in. (1.6 to 4.8 mm), where an appropriate jointing sand is properly installed and maintained and where sufficient edge restraint is provided can perform well and substantially reduce the potential for movement of the pavers from horizontal creep.

Slip Resistance, Skid Resistance and Hydroplaning

Each of these issues relates to the slipperiness of the pavement surface. Slip resistance generally refers to the slipperiness of a pavement as experienced by pedestrians. Skid resistance and hydroplaning are related to the slipperiness of a pavement as experienced by vehicles.

The slip resistance is determined as the static coefficient of friction of a surface. A number of test procedures are available for laboratory and field testing, but they may provide different values. Slip resistance can be measured in the laboratory and the field using ASTM C 1028, *Test Method for Determining the Static Coefficient of Friction of Ceramic Tile and Other Like Surfaces by the Horizontal Dynamometer Pull-Meter Method* [Ref. 4]. For surfaces in an accessible route, the United States Access Board historically recommended, but did not mandate, a value of 0.6 for level surfaces and 0.8 for ramps when measured by the portable NBS-Brungraber machine using a silastic sensor shoe. Most clay pavers exceed these values.

Skid resistance is typically determined on the basis of a material's dynamic coefficient of friction, which generally decreases as speed increases. Testing usually involves either a specialized test vehicle moving at more than 30 mph (50 kph) or a portable British Pendulum Tester used in accordance with ASTM E 303, *Test Method for Measuring Surface Frictional Properties Using the British Pendulum Tester* [Ref. 11]. For paving systems exposed to light duty application pavements covered in this *Technical Note* 14 series, skid resistance is not an issue. Hydroplaning also is associated with speed, but in conjunction with standing water on the pavement surface. Due to the speed restrictions imposed on clay pavements subject to light duty vehicle traffic, hydroplaning should not be a concern for clay pavements.

Slope

Paving systems can be successfully used on slopes with up to a 10 percent gradient. For projects where site conditions involve slopes exceeding 10 percent, a design professional and local codes should be consulted.

Drainage

Adequate drainage is important to the performance and durability of any clay paving system. Water should be drained from the paving system as quickly as possible. A minimum slope of 1/4 in. per ft of slope (2 percent grade) is recommended. Adequate drainage should be provided to ensure the integrity of all layers in a paving system.

Three types of drainage potentially exist in clay paving systems: surface restricted, subsurface restricted and unrestricted. Surface restricted drainage occurs on the surface of the paving system. This type of drainage is typical of clay paving systems with a mortar setting bed. Subsurface restricted drainage occurs when water drains over the surface and immediately below the paving course. This type of drainage is typical of paving systems installed with a bituminous setting bed. Unrestricted drainage involves draining water from the surface, the subsurface and through the subgrade. This type of drainage requires a sand setting bed on an aggregate base.

Drains should be selected and placed to adequately handle anticipated water flow. Drains serving paving systems should have openings not only on the surface but also on the sides. Such drains should be used for all paving systems to drain water from adjacent materials and to prevent capillary rise. Side openings should extend below the top of any impervious layer or membrane in the paving system. Drains placed in pavements with sand setting beds should have screens to prevent sand from entering the drain. Pavement edges that restrict water flow at the lowest point in the paving system where water is anticipated should have weeps at 16 in. (406 mm) on center.

Accessibility

The Americans with Disabilities Act Accessibility Guidelines (ADAAG) [Ref. 1] establish minimum design requirements that cover access for people with disabilities to public and private buildings and facilities. The Public Rights-Of-Way Accessibility Guidelines (Draft PROWAG) [Ref. 13] in draft form cover disability access provisions for pedestrian areas along public rights-of-way. Research has documented that clay paving systems can comply with the accessible provisions within these guidelines [Ref. 12 and 15].

The ADAAG and Draft PROWAG mandate several surface profile requirements applicable to all pavement systems. The designer should be aware of maximum permissible gradients and other requirements that often are overlooked (see Photo 5).

In addition to planning and designing in accordance with these guidelines, it is important to implement regular maintenance programs to maintain these routes in a safe and serviceable condition. Specific requirements especially pertinent to clay pavers include surface, changes in level, joints and detectable warning surfaces.

Surface. The ADAAG and Draft PROWAG require an accessible surface to be firm, stable and slip-resistant. Smoothness also may be an important criterion, because a pedestrian in a wheelchair may be more sensitive to vibration or trip hazards. Properly designed, installed and maintained clay paver surfaces achieve these properties. Besides inadequate design, installation or maintenance, all pavement systems may be subject to heaving and settlement of underlying soils that result in changes in level. Research has shown that the vibration on clay paver surfaces is comparable to or less than that of poured concrete and other common paving materials [Refs. 12 and 15].

Changes in Level. Both the ADAAG and Draft PROWAG allow a change in level (surface discontinuity) up to 1/4 in. (6.4 mm) (see Figure 3a). Both the ADAAG and Draft PROWAG allow a change in level between 1/4 in. (6.4 mm) minimum and 1/2 in. (12.7 mm) maximum. The ADAAG requires this change in level to be sloped (beveled) not steeper than 1:2 (see Figure 3b). The Draft PROWAG also requires a maximum slope (bevel) of 1:2 for this change in level, but further mandates that the slope (bevel) be applied across the entire change in level (see Figure 3c).

With respect to pavers, sudden changes in level (differences in elevation of the top surfaces of adjacent pavers) should be kept to a minimum through careful

Photo 5
At Grade Street Crossing with ADA-Compliant Surface Texture Changes

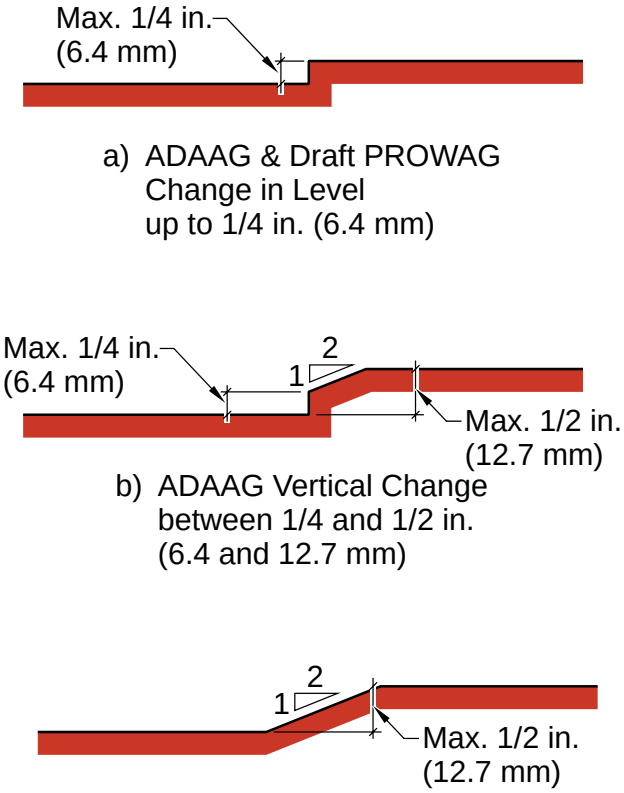

Figure 3
Requirements for Making Changes in Elevation

design and installation and should be maintained as part of a regular maintenance program. Changes in level can result from heaving or settling of the pavement; uneven joints or can occur at frames and manhole covers.

Joints. The ADAAG does not specifically cover joints, but it does have requirements for openings in gratings, which could be considered as being similar. The Draft PROWAG ADAAG has requirements for horizontal openings in walkway joints and gratings. Both guidelines allow openings up to 1/2 in. (12.7 mm) wide, more than twice the typical width of joints between pavers in pavements with sand and bituminous setting beds that are typically 1/16 in. (1.6 mm) to 3/16 in. (4.7 mm) wide. Joints between pavers in a mortar setting bed are generally 3/8 in. (9.4 mm) to 1/2 in. (12.7 mm) wide, but would not be considered an opening.

Detectable Warning Surfaces. Both the ADAAG and the Draft PROWAG require detectable warning surfaces consisting of truncated domes sized to have a base diameter of 0.9 in. (23 mm) minimum and 1.4 in. (36 mm) maximum, a top diameter of a minimum of 50 percent to a maximum of 65 percent of the base diameter, and a height of 0.2 in. (5.1 mm). Clay pavers can be made with truncated domes.

The ADAAG requires truncated domes to be placed on a square grid with a center-to-center spacing of 1.6 in. (41 mm) minimum and 2.4 in. (61 mm) maximum, and a base-to-base spacing of 0.65 in. (17 mm) minimum, measured between the most adjacent domes. The Draft PROWAG requires truncated domes to be placed in either a square or a radial grid pattern meeting the same dimensional layout requirements as set forth in the ADAAG.

Both guidelines require detectable warning surfaces to extend 24 in. (610 mm) from rail platform boarding edges. The Draft PROWAG also covers curb ramps and blended transitions that are not covered in the ADAAG. Curb ramps and blended transitions require detectable warning surfaces to extend 24 in. (610 mm) minimum in the direction of travel for their full width. Flares of curb ramps are not required to have a detectable warning surface.

CLAY PAVERS

Manufacturing

Clay pavers are manufactured in much the same way as face brick, as discussed in *Technical Note* 9. Extrusion (stiff-mud), molding (soft-mud) or dry-pressing processes are used to produce pavers (see Figure 4). Extruded clay pavers have a wire-cut texture or smooth die-skin wearing surface. Lugs (spacer bars) and chamfers may be formed on the sides and edges of the pavers during the extrusion or cutting process. Clay pavers produced by the molding or dry-pressing processes have a smooth or textured surface. Lugs and chamfers also may be formed by the sides and edges of the molds. Pavers from any of the production methods may have aesthetic features such as irregular or textured edges. Clay pavers made by the molding or dry-pressed process may have frogs or cavities on one bed surface, although they would not be exposed.

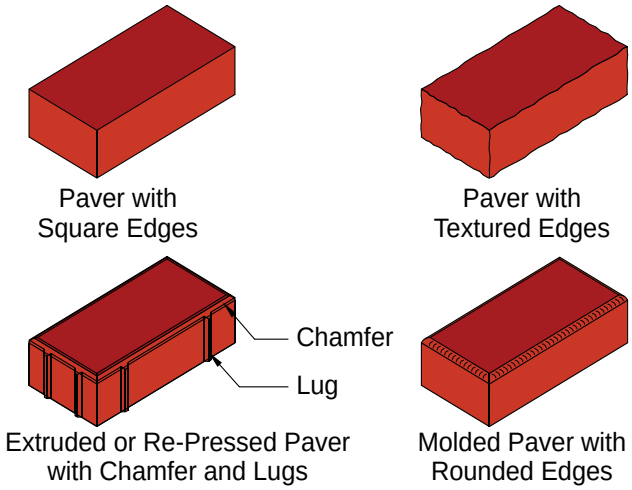

Figure 4
Clay Pavers

Pavers generally are manufactured with their length equal to a module of their width. Two commonly specified clay paver sizes are 4 in. wide by 8 in. long (102 mm by 203 mm) and 3 $^5/_8$ in. wide by 7 $^5/_8$ in. (92 mm by 194 mm) long. Other similar sizes are available, such as 3¾ in. (95 mm) wide by 7½ in. (190 mm) long, and several manufacturers are able to provide custom sizes. Common specified thicknesses are 1½ in. (38 mm), 2¼ in. (57 mm) and 2 $^5/_8$ in. (67 mm).

Standards

Clay pavers can be used as a wearing course in many exterior pavement and interior floors. Most pavers in the United States are manufactured to comply with consensus standards published by ASTM International (ASTM). Two ASTM standards define requirements for clay pavers for exterior use: ASTM C 902, *Standard Specification for Pedestrian and Light Traffic Paving Brick* [Ref. 3], and ASTM C 1272, *Standard Specification for Heavy*

Vehicular Paving Brick. [Ref. 5] For light duty applications addressed by the *Technical Notes* 14 series, clay pavers complying with ASTM C 902 are normally used. Clay pavers manufactured to meet ASTM C 1272 may be used in light duty or heavy vehicular applications and may provide longer pavement service life — especially where the pavement is subject to higher volumes of vehicular traffic. Only clay pavers meeting the requirements of ASTM C 1272 are suitable for heavy vehicular applications, which are covered in *Flexible Vehicular Brick Paving – A Heavy Duty Applications Guide*.

ASTM C 902. This specification covers clay pavers suitable for patios, walkways, floors, plazas, residential driveways and commercial driveways (passenger drop-offs). It describes three Classes and three Types of clay pavers according to severity of their exposure to weather and to traffic, respectively. Three Applications also are defined, based upon the pavers' intended use, and limit their dimensional tolerances, distortion and extent of chipping.

Class - A paver's Class relates to its resistance to damage from exposure to weather and is based on compressive strength and absorption properties. Class SX pavers are intended for use where the pavers may be frozen while saturated with water. Class MX pavers are intended for exterior use where the pavers will not be exposed to freezing conditions. Class NX pavers are not acceptable for exterior use but may be used for interior areas where the pavers are protected from freezing when wet. For most exterior residential or light duty applications, Class SX pavers are used.

Type - A paver's Type relates to its resistance to abrasion. Type I pavers are intended for use where the pavers are exposed to extensive abrasion, such as sidewalks and driveways in publicly occupied spaces. Type II pavers are intended for use where the pavers are exposed to intermediate pedestrian traffic, such as heavily traveled residential walkways and residential driveways. Type III pavers are intended for use in low pedestrian traffic, residential areas such as floors and patios of single-family homes. For most exterior residential or light duty applications, Type I or II pavers are used.

Application - A paver's Application relates to its aesthetics and use. Application PS pavers are intended for general use and can be installed in any bond pattern with mortar or with sand-filled joints when not exposed to vehicular traffic. When Application PS pavers are installed with sand-filled joints for light duty vehicular applications, they should be laid in running bond or other bonds not requiring extremely close dimensional tolerances. Any bond pattern can be used when Application PS pavers are installed with mortar joints. Application PX pavers have tighter dimensional tolerances that allow consistently narrow joints between pavers. Such uses include pavements without mortar joints between pavers where exceptionally close dimensional tolerances are required as a result of special bond patterns or unusual construction requirements. Application PA pavers are characterized by aesthetic effects such as variability in size, color and texture. Such pavers have performed successfully in many historic clay paving applications and are generally used where a distinctive architectural character is desired. Such applications are often installed with mortar joints between pavers, but can be successful in sand-filled joint applications that are laid by workers with experience installing Application PA pavers in this manner. Using stabilized joint sand or applying stabilizer to joint sand will help prevent sand loss from wider sand-filled joints.

Pavers complying with ASTM C 902 are not required to have a minimum thickness. However, they are commonly manufactured to a specified thickness of 2¼ in. (57 mm) and 1½ in. (38 mm). Except for patios or walks for one- or two-family homes in southern climates with limited frost exposure, clay pavers 1½ in. (38 mm) thick are usually installed only over a rigid base.

ASTM C 1272. This standard addresses heavy vehicular pavers generally used in streets, commercial driveways and industrial applications. ASTM C 1272 designates two Types of pavers depending on their method of installation. Three Applications limit dimensional tolerances, distortion and extent of chipping.

The paver Type is based upon the compressive strength, breaking load and absorption properties of the pavers. Type F pavers are intended to be set in a sand setting bed with sand-filled joints. The minimum paver thickness is required to be 2 $^{5}/_{8}$ in. (67 mm). They also can be installed over flexible or rigid bases. Type R pavers are intended to be set in a mortar setting bed with mortar joints over a concrete base. Type R pavers also can be set on a bituminous setting bed with sand-filled joints and supported by an asphalt or concrete base. The minimum thickness for Type R pavers is required to be 2¼ in. (57 mm).

Applications PS, PX and PA are common to both ASTM standards and denote similar requirements.

Pavers complying with ASTM C 1272 may contain frogs but must be without cores or perforations.

ASTM Properties for Clay Pavers. The Class, Type and Application designations within ASTM clay paver standards are based upon physical properties and characteristics, including compressive strength, breaking load, absorption, abrasion, dimensional tolerances and extent of chipping. Pavers must be resistant to damage from the effects of traffic and the environment. In many regions of the United States, clay pavers will be exposed to severe environmental conditions. Pavers often are in a saturated condition and can experience numerous freeze/thaw cycles. Application of deicers can cause additional thermal shock to pavers. Compliance with property requirements of ASTM C 902 and C 1272 provides the required durability.

Compressive Strength, Breaking Load and Absorption - The strength and absorption requirements of pavers from the ASTM standards are shown in Table 4. Some pavers are durable, but cannot be classified under the physical requirements shown in Table 4. Using alternatives in the specifications allows pavers that are known to perform well to meet the durability requirement. It does not signify that the pavers are of a lower quality.

TABLE 4
Property Requirements

ASTM Standard		Minimum Compressive Strength, psi (Mpa)		Maximum Cold Water Absorption, %		Maximum Saturation Coefficient		Minimum Breaking Load, lb/in. (kN/mm)	
		Avg of 5 Brick	Individual	Avg of 5 Brick	Individual	Avg of 5 Brick	Individual	Avg of 5 Brick	Individual
C 902	Class SX	8,000 (55.2)	7,000 (48.3)	8.0	11.0	0.78	0.80	----	----
	Class SX (molded)	4,000 (27.6)	3,500 (24.1)	16.0	18.0	0.78	0.80	----	----
	Class MX	3,000 (20.7)	2,500 (17.2)	14.0	17.0	No Limit	No Limit	----	----
	Class NX	3,000 (20.7)	2,500 (17.2)	No Limit	No Limit	No Limit	No Limit	----	----
C 1272	Type R	8,000 (55.2)	7,000 (48.3)	6.0	7.0	----	----	----	----
	Type F	10,000 (69.0)	8,800 (60.7)	6.0	7.0	----	----	475 (83)	333 (58)

For pavers complying with ASTM C 902 or C 1272, several alternatives are allowed. The freezing and thawing test alternative allows the cold water absorption and the saturation coefficient to be waived if a sample of five brick that meet all other requirements passes the freezing and thawing test of ASTM C 67 without breaking and with no greater than 0.5 percent loss in dry weight of any individual unit. The sulfate soundness alternative allows the cold water absorption and saturation coefficient to be waived if five brick survive 15 cycles of the sulfate soundness test with no visible damage. The performance alternative allows specifiers to waive all property requirements for pavers if they are satisfied with information furnished by the manufacturer on the performance of the pavers in a similar application subject to similar exposure and traffic.

For pavers complying with ASTM C 902, the absorption alternative allows the saturation coefficient to be waived for pavers that absorb less than 6.0% after 24 hours of submersion in room-temperature water.

Abrasion - The Abrasion Index is the ratio of the absorption divided by the compressive strength, multiplied by 100. The compressive specimen must be half pavers that are without core holes, frogs or other perforations, and the full height of the paver no less than 2¼ in. (57 mm). The volume abrasion loss is used if the height requirement cannot be met. The volume abrasion loss is determined by the loss of material created by sandblasting the surface of the paver. The abrasion requirements of pavers from the ASTM standards are shown in Table 5.

TABLE 5
Maximum Abrasion Requirements

ASTM Standard		Abrasion Index	Volume Abrasion Loss (cm^3/cm^2)
C 902	Type I	0.11	1.7
	Type II	0.25	2.7
	Type III	0.50	4.0
C 1272	Type R & F	0.11	1.7

Dimensional Tolerances - The dimensional tolerances for pavers are based upon the dimension — width, height or length — considered. The actual dimensions may vary from the specified dimension by no more than plus or minus the dimensional tolerance. The tolerances for both C 902 and C 1272 pavers are shown in Table 6.

TABLE 6
Dimensional Tolerance Requirements

Dimension, in. (mm)	ASTM C 902 and C 1272		
	Application PS, in. (mm)	Application PX, in. (mm)	Application PA
3 (76) and under	1/8 (3.2)	1/16 (1.6)	no limit
over 3 to 5 (76 to 127)	3/16 (4.7)	3/32 (2.4)	no limit
over 5 to 8 (127 to 203)	1/4 (6.4)	1/8 (3.2)	no limit
over 8 (203)	5/16 (7.9)	7/32 (5.6)	no limit

Chippage - Clay pavers may chip in transit or during construction. Table 7 shows the extent of chippage allowed by prescribing the maximum distance that chips may extend into the surface of a paver from an edge or a corner. The sum of the length of chips on a single paver must not exceed 10 percent of the perimeter of the exposed face of the paver. Cobbled or tumbled pavers that are intentionally distressed after production are classified as Application PA pavers.

TABLE 7
Maximum Chippage Requirements

ASTM Standard		Edge, in. (mm)	Corner, in. (mm)
C 902	Application PS	5/16 (7.9)	1/2 (12.7)
	Application PX	1/4 (6.4)	3/8 (9.5)
	Application PA	As specifed by purchaser	As specifed by purchaser
C 1272	Application PS & PX	5/16 (7.9)	1/2 (12.7)
	Application PA	No Limit	No Limit

Distortion - Both ASTM C 902 and C 1272 limit distortion and warpage of surfaces and edges intended to be exposed in use. The distortion must not exceed the maximum for the Application specified as noted in Table 8.

TABLE 8
Tolerances on Distortion

Specified Dimension, in. (mm)	ASTM C 902 & C 1272[1] Maximum Permissable Distortion, in. (mm)		
	Application PX	Application PS	Application PA
8 (203) and under	1/16 (1.6)	3/32 (2.4)	no limit
Over 8 (203) to 12 (305)	3/32 (2.4)	1/8 (3.2)	no limit
Over 12 (305) to 16 (406)	1/8 (3.2)	5/32 (4.0)	no limit

[1] ASTM C 1272 Type F clay paver required to meet Application PX

SETTING BEDS

Setting beds provide a means to adjust for dimensional variations in the height of a paver. They also support the clay pavers and transfer load to the base.

Sand Setting Bed

Individual pavers in sand setting beds are held in position by the frictional interlock that is developed in each sand-filled joint between adjacent pavers. The joints transfer vertical and horizontal forces, but can absorb expansion

and contraction of the individual pavers. If the pavement deflects slightly, the pavers will realign themselves to the new profile without significant loss in structural capacity. Interlock is developed by properly sized joints filled with consolidated joint sand. Sand setting beds may be installed directly on an aggregate base, asphalt base, cement-treated aggregate base or concrete base. For further information about pavements with sand setting beds, refer to *Technical Note* 14A.

Bituminous Setting Bed

In pavements with a bituminous setting bed, less interlock is developed by the joint material than in a pavement with a sand setting bed. However, additional restraint is provided by the adhesive nature of the tack coat. Bituminous setting beds can be are set on an asphalt base or concrete base. For further information about pavements with bituminous setting beds, refer to *Technical Note* 14B.

Mortar Setting Bed

Pavers in a mortar setting bed are bonded to the underlying mortar bed and transfer most of the vertical load through direct bearing. Mortar setting beds should be used only with a concrete base and may be bonded or unbonded to it. The joints between pavers are filled with mortar that transfers horizontal load. However, mortar will not absorb expansion and contraction of individual pavers. If the pavement deflects significantly, the pavement may crack along mortar lines or across pavers. For further information about pavements with mortar setting beds, refer to *Technical Note* 14C.

BASES

The base layer in the pavement is the primary structural layer. It is subjected to the compressive, tensile and shearing stresses transmitted through the wearing course. Materials in the base layer need to be capable of resisting these stresses. Pedestrian loading is sufficiently light that a base thickness of only 4 in. (102 mm) is required when no specific site conditions dictate a thicker base. Vehicular loading requires a thicker base.

Including a subbase often provides economic benefits when the subgrade is of low strength or is susceptible to frost. Because it is lower in the pavement section, the subbase is subjected to lower stresses than the base course (see Figure 1). A subbase also can serve as a working platform to prevent subgrade damage from construction equipment. Subbase material also may be added to increase the depth of the pavement section in frost-susceptible soils. A subbase is not usually required for light duty vehicular pavements. Pedestrian-only pavements generally do not include a subbase.

Aggregate Subbase and Base

Aggregate subbase materials are typically medium-quality graded aggregates or clean sand-and-gravel mixtures. They should not be susceptible to deterioration from moisture or freezing. Subbase materials are covered by ASTM D 2940, *Specification for Graded Aggregate Material for Bases or Sub-bases for Highways or Airports* [Ref. 9]. Typical gradation envelopes are prescribed, along with other properties such as durability and plasticity. Aggregate subbase materials generally are graded from 1½ in. (38 mm) to No. 200 (0.075 mm) sizes. Aggregate subbase materials may be used directly over the subgrade soil or on top of a geotextile.

Aggregate base materials are typically high-quality, crushed, dense-graded aggregates. They usually are specified in ASTM D 2940. Aggregate base materials generally are graded from 3/4 in. (19.1 mm) to No. 200 (0.075 mm) sizes. An aggregate base may be placed directly on the subgrade or over an aggregate subbase. A sand setting bed may be installed directly on an aggregate base.

It is important to compact aggregate subbase and base layers. Each layer should be compacted in accordance with ASTM D 698 to 95 percent maximum density.

Asphalt Base

Asphalt base materials consist of mixtures of aggregates and asphalt cement that are produced at a central hot-mix plant. The materials are proportioned to comply with a mix design, and the materials usually are specified in state or local standards and in ASTM D 3515, *Specification for Hot-Mixed, Hot-Laid Bituminous Paving Mixtures* [Ref. 10]. Asphalt aggregates usually are blended to achieve a gradation from 1/2 in. (12.7 mm) or 3/8 in. (9.5 mm) to No. 200 (0.075 mm). An asphalt base may be placed directly on the subgrade but is more commonly laid over an aggregate subbase or base. It creates a relatively stiff and impermeable base layer.

Cement-Treated Aggregate Base

A cement-treated aggregate base material is a relatively dry, lean mixture of aggregate and portland cement that creates a stiff and impermeable base layer. These materials should be mixed at a concrete plant and laid by machine. Cement contents vary between 5 and 12 percent with sufficient water added to achieve required compaction and full hydration of cement. Compressive strengths typically are around 750 psi (5.17 MPa). A cement-treated aggregate base may be placed directly on the subgrade but is more commonly laid over an aggregate subbase. This type of base does not include reinforcement, and because of the low water and cement content, can be laid without movement joints.

Concrete Base

The compressive strength of a concrete base should be at least 4,000 psi (27.6 MPa). Concrete bases may be plain or reinforced, incorporating a grid of movement joints with load transfer devices, such as dowels. Layouts of movement joints require careful consideration of the overlying pavement system. Movement joints placed more than 12 ft (3.66 m) apart should extend through the entire pavement to prevent damage to the pavers unless using an unbonded system. A concrete base should be placed over an aggregate subbase or base.

SUBGRADE

The subgrade is classified by the existing soil conditions, the environment and drainage. For vehicular applications, the existing soil conditions for the project should be determined by a geotechnical engineer before design of the paving system. For pedestrian and residential applications, a geotechnical engineer should be used as necessary to verify suitability of existing soil for the proposed paving system.

Environmental conditions and the quality of drainage can affect the support provided by the subgrade. In wet climates, poorly drained areas or those that experience freezing conditions, the support from the subgrade is likely to be reduced during certain periods of the paving system's life. Conversely, in arid climates or well-drained areas, it is likely that a higher degree of subgrade support will be experienced during part of the paving system's life. Where water can penetrate the subgrade, it is important to drain water quickly to alleviate any potential fluctuations in soil moisture content.

Soils are typically classified into different groups to represent their engineering properties. In general, soils consisting primarily of gravel and sand can be used to support most paving systems. In general, soil consisting of clay can usually be used to support a paving system as long as it is located in a dry environment or is drained. Soils classified as organic are not suitable for subgrade and should be removed and replaced. For further guidance regarding soil capacities, refer to *Flexible Vehicular Brick Paving – A Heavy Duty Applications Guide* [Ref. 14].

GEOTEXTILE

Geotextiles are formed from plastic yarns or filaments such as polypropylene and polyester. They may be woven or nonwoven fabrics supplied in rolls. A geotextile may be used between fine-grained subgrade materials and base or subbase layers, particularly where moist conditions are anticipated. This separates the two layers, preventing the intrusion of fine soil particles into the overlying granular layer and preventing larger aggregates from punching down into the subgrade. This enables the base to retain its strength over a longer period. Geotextiles also can provide limited reinforcement to the overlying pavement layer. As the subgrade begins to deform, the geotextile is put into tension, which reduces the loading on the subgrade, slowing rut development. The geotextile manufacturer's recommendations should be sought during selection of the appropriate geotextile for particular soil conditions.

PAVEMENT LAYER CONSTRUCTION

Subgrade Preparation

The subgrade should be excavated to achieve a uniform pavement thickness, and any substandard or soft materials should be undercut and replaced with acceptable backfill. A subsurface drainage system may be installed as perforated pipes or fin drains if necessary. All utility trenches should be properly backfilled and each layer thoroughly compacted to prevent settlement. The subgrade should be scarified and moisture conditioned

to within 2 percent of optimum moisture content as determined by ASTM D 698, *Test Methods for Laboratory Compaction Characteristics of Soil Using Standard Effort* (12,400 ft-lbf/ft³ (600 kN-m/m³)) [Ref. 7], to a depth of 6 in. (152 mm). Moisture conditioning clay subgrades can be more complicated, because the clay absorbs water more slowly. It should then be graded to the appropriate profile and compacted by rolling with appropriate static or vibratory rollers. The subgrade should be compacted in accordance with ASTM D 698 to 95 percent maximum dry density for clay and 100 percent maximum dry density for sand/gravel.

Geotextile

When a geotextile is used, it should be placed immediately before spreading the aggregate subbase or aggregate base. Geotextiles are not used when other base types are constructed directly on the subgrade. Care should be taken to stretch the material as it is unrolled to remove any wrinkles. A minimum lap of 12 in. (305 mm) should be provided at the sides and ends of rolls. Construction equipment should not be allowed to operate directly on the geotextile.

Aggregate Subbase and Base

Aggregate subbase and base courses are spread in layers of up to 6 in. (152 mm) in compacted thickness, dependent upon the proposed compaction process. Material may be end-dumped from the delivery trucks and spread by grader spreaders or by hand with care to avoid segregation. The material should be moisture conditioned to within 2 percent of the optimum moisture content from ASTM D 698. It should then be compacted by rolling with appropriate static or vibratory rollers, or with a plate vibrator. When using a plate vibrator, the layer thickness must be 3 in. (76 mm) or less, and more than one layer may be required. The subbase and base layers should be compacted according to ASTM D 698 to 95 percent maximum dry density. Limited regrading is permissible to achieve correct surface profile and elevations. The maximum variation under the setting bed should be +/- 3/16 in. (4.8 mm) when tested with a 10 ft (3.05 m) straightedge laid on the surface. The minimum slope of the aggregate base should be 1 in. (25.4 mm) in 4 ft (1.22 m) to allow for drainage.

Asphalt Base

Asphalt materials are produced at a hot-mix plant. They are mixed at temperatures up to 300 ºF (149 ºC) and should be installed before they cool to temperatures below 200 ºF (93 ºC). Asphalt base layers can be spread by machine or by hand. Asphalt can be laid in lifts from 1½ to 3 in. (38 to 76 mm) in thickness depending on the aggregate size and compaction equipment. Hand spreading requires adequate compaction of the base. Machine installation using a paving machine provides initial compaction, enabling more accurate placement and elevations to be achieved. Compaction of the asphalt is accomplished by an initial “breakdown” rolling and then by a finish rolling with steel- or rubber-tired rollers. Compaction is continued until the required density is achieved. This normally is a minimum of 96 percent of the density of samples of the same material compacted in a laboratory. Once materials have cooled to the ambient temperature, the layer can receive traffic, although the asphalt continues to stiffen over several months. The maximum variation under the setting bed should be +/- 3/16 in. (4.8 mm) when a 10 ft (3.05 m) straightedge is laid on the surface. The minimum slope of the asphalt base surface should be 1 in. (25.4 mm) in 4 ft (1.22 m) to allow for drainage.

Cement-Treated Aggregate Base

Plant-mixed cement-treated aggregate bases are transported to the site for spreading by machine or by hand. When spread by a paving machine, the base should be compacted to the appropriate thickness. When spread by a grader or by hand, adequate compaction is required. A cement-treated aggregate base also can be mixed in place using special equipment. A granular subgrade or imported aggregate is thoroughly mixed with cement and water to achieve the required thickness. Materials should be placed and compacted within two hours of adding water and before initial set of the cement. The base should be compacted according to ASTM D 1557, *Test Methods for Laboratory Compaction Characteristics of Soil Using Modified Effort (56,000 ft-lbf/ft³ (2,700 kN-m/m³))* [Ref. 8] to at least 95 percent of the maximum dry density. The cement-treated layer should be cured by water misting or by applying an asphalt emulsion cure coat. Traffic should not be allowed on the base for at least seven days, but paver installation may commence after three days. The maximum variation under the setting bed should be +/- 3/16 in. (4.7 mm) when a 10 ft (3.05 m) straightedge is laid on the surface. The minimum slope of the base surface should be 1 in. (25.4 mm) in 4 ft (1.22 m) to allow for drainage.

Concrete Base

Concrete usually is plant-mixed and delivered to the site in ready-mix trucks. It is discharged between forms, where it is spread and consolidated. The formwork is set to the correct elevations, and a vibrating screed is drawn between the forms to achieve the appropriate surface elevations. Movement joints containing load-transfer devices may be formed at the edges of each pour, or the devices can be cast into the concrete between forms. Saw cutting may be undertaken to induce cracking at the desired locations. A concrete base may be finished with a broom, brush or wood float. A polished surface finish should be avoided. Care should be taken to follow proper curing procedures for at least 14 days. Vehicular loads should not be permitted for at least 7 days, but paver installation may commence after 3 days. The maximum variation under the setting bed should be +/- 3/16 in. (4.7 mm) when a 10 ft (3.05 m) straightedge is laid on the surface. The minimum slope of the concrete base surface should be 1 in. (25.4 mm) in 4 ft (1.22 m) to allow for drainage.

CLEANING AND MAINTENANCE

Clay pavers are highly resistant to absorption of stains and can be kept clean in most environments by regular sweeping. Otherwise, cleaning of brick pavements essentially is the same as cleaning vertical brickwork, as discussed in *Technical Note* 20. Mortar-filled joints generally are more resistant to aggressive cleaning methods (i.e. pressure washers). Sand-filled joints subjected to aggressive cleaning methods should contain stabilized joint sand or should be treated with a joint sand stabilizer.

Efflorescence

Efflorescence is a white, powdery substance that may occasionally appear on the surface of pavers. It is the product of soluble compounds normally found in other pavement components or underlying soils, which are deposited on the surface of the paver as absorbed water evaporates from the pavement surface. Soluble compounds absorbed by the pavement from deicing chemicals also may cause efflorescence. Efflorescence often can be vacuumed or brushed off the surface and removed from dry pavers. Washing downhill with water may temporarily dissipate soluble compounds by dissolving them. However, care must be taken to ensure that the contaminated water drains away from and does not re-enter the paving system.

In many cases, efflorescence will be minimal and will wear away naturally with traffic and weathering during the early life of the pavement. If the salts are the result of groundwater or other more persistent water ingress, proprietary cleaners are available to assist in their removal. Proper surface and subsurface drainage are critical in these situations. For further information on efflorescence, refer to *Technical Notes* 23 and 23A.

Ice Removal

Several proprietary chemical products are available for preventing and removing ice from paved surfaces that perform well and reduce potential staining of pavers. Among these are calcium magnesium acetate and urea. The former is preferred because it is more effective at lower temperatures. Deicing of pavements has been undertaken for many years using rock salt. This material contains calcium chloride and can cause efflorescence. Sand or grit used to provide traction on ice should be swept up after the freezing cycle to minimize grinding of the pavers.

Snow Removal

Clearing snow from clay pavements can be undertaken using plows, snow blowers, shovels and brushes as used for other pavements. Care must be taken to ensure that the blades of the equipment do not scrape the pavement surface in a manner that might cause chipping. Rubber or urethane blade edges can be used, or proper blade height can be maintained above the pavement surface using guide wheels. Any residual snow can be cleared with brushes. Some snow-clearing procedures use heavy equipment to stockpile and subsequently remove the snow from the property. If such equipment is used, the load capacity of the pavement should be adequately designed.

SPECIAL APPLICATIONS AND CONDITIONS

Clay pavers can be used in a number of special applications that require consideration of additional aspects. The following sections cover the design of clay paver wearing surfaces for suspended decks, permeable paving systems and hydronic snowmelt systems.

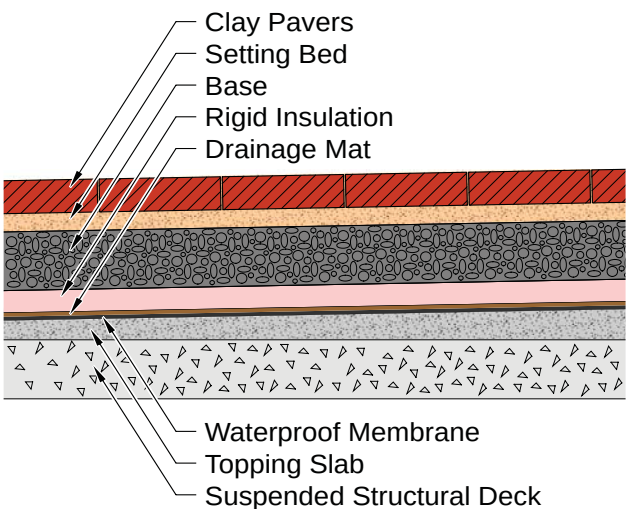

Figure 5
Typical Suspended Deck Paving Section

Photo 6
Permeable Clay Pavement

Suspended Structural Slabs

The design of pavement surfaces on suspended decks presents a special series of challenges, particularly when constructed over habitable space (see Figure 5). These include prevention of water penetration into the structure, reduction in heat loss/gain and dealing with elastic deflections.

Waterproofing. A pavement constructed over a structural concrete slab often requires a waterproof membrane. Several sheet and liquid-applied membranes are available. In most applications, a protection board is required over the waterproof membrane.

Drainage. Water inevitably will penetrate the paver system, and drainage is required to prevent it from collecting on top of the waterproof membrane. Horizontal drainage mats consisting of a dimpled three-dimensional plastic core covered with filter fabric frequently are used. A 2 percent slope should be provided toward drains to assist drainage of water. Although the core material has a high compressive strength, the filter fabric can be compressed. Consequently, horizontal drainage mats in pavements subject to vehicular traffic should not be positioned immediately below the setting bed.

Insulation. When a paved surface is located over a habitable space, it may be necessary to incorporate insulation into the section. The most common type of insulation is extruded polystyrene, available in boards of various compressive strengths and thicknesses. However, compressive strength values are measured when the insulation thickness is compressed 5 percent. As such, the material is resilient under load and should not be placed immediately under the setting bed when vehicular traffic will use the pavement.

An alternative insulating material that can be used in pavement systems on suspended structural slabs subject to vehicular traffic is foamed concrete. It is more rigid than extruded polystyrene but is less thermally efficient. This material also is available in a range of compressive strengths and insulation values.

Loading. Pavers and setting bed materials can be considered to apply a dead load of 10 lb/sq ft per inch (190 Pa per cm) of thickness.

Deflections. A maximum deflection of 1/360 of the span is recommended for flexible pavement systems installed over a suspended structural slab. If vehicular loads are anticipated, flexible pavement deflection should be limited to 1/480. When rigid paving systems are installed, the deflections should be limited to 1/600.

Permeable Pavements

Many urban development regulations require that the surface-water runoff from a new project should not exceed the original values. This may be expressed as a peak flow rate or as a total quantity of water. Permeable pavements (see Photo 6) can be used to reduce or delay entry of runoff from a pavement surface into stormwater systems or environmentally sensitive areas. In pavements with clay pavers, this can be achieved by creating wide

joints that are filled with a permeable aggregate rather than sand. The pavers are also laid on a permeable setting bed. This allows the water that falls on a pavement to filter through the surface into a permeable base. The water will be temporarily stored in the base, or it may soak into the subgrade if this is also permeable (see Figure 6).

Subgrades. If the subgrade is permeable, water that infiltrates the pavement through the surface voids can drain away over time, after a rain event. Good practice usually requires that water completely drains within three days of entering the pavement. However, compaction in preparation for placing the base material may result in significant reduction in subgrade permeability. As such, there are few permeable pavements that can rely completely on exfiltration through the subgrade. If the water will not drain, provision should be made to release the water stored in the base material through drainage pipes.

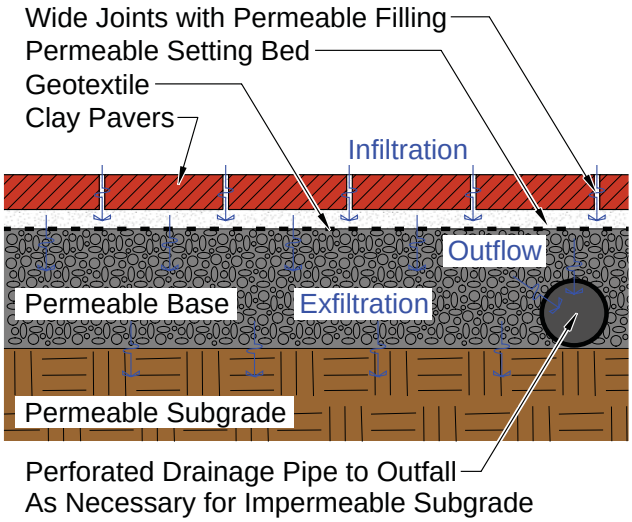

Figure 6
Typical Permeable Pavement Section

Bases. Permeable bases are constructed using single size or open graded aggregate materials. These materials typically have a void content of 15 percent to 40 percent to accommodate the water that needs to be detained. Typical single-number aggregate sizes No. 4, No. 5 and No. 6 from ASTM C 33, *Specification for Concrete Aggregate* [Ref. 2] or ASTM D 448, *Classification for Sizes of Aggregate for Road and Bridge Construction* [Ref. 6] have a high void content and are frequently used. There are several double-number size options such as No. 57 and No. 67. For these aggregate materials, the void content is less because a broader grading envelope is used, but the material may be more readily available.

Setting Bed and Joints. Similar aggregate is commonly used for the setting bed and joints. Size No. 8, No. 9 or No. 89 aggregates complying with ASTM C 33 or ASTM D 448 are most frequently used. Joints ranging from 1/4 to 3/8 in. (6.4 to 9.5 mm) are typical. There also are several systems that use plastic spacers to create consistent width joints of 1/2 to 3/4 in. (12.7 to 19.1 mm). However, the interlock between pavers is greatly reduced when joint sizes are greater than 1/4 in. (6.4 mm) or when plastic spacers are used.

Hydronic Snow Melt Systems

Hydronic snow melt systems consist of a network of plastic tubing incorporated into the pavement system, typically at 6 to 8 in. (150 to 200 mm) centers. Heated liquid is pumped around the system during near- and subfreezing conditions so that the pavement temperature is maintained slightly above freezing, thus preventing the accumulation of snow or the development of ice on the pavement surface. Continuous loops of 3/4 to 1 in. (19.1 to 25.4 mm) diameter tubing are made from cross-linked polyethylene. Tubing usually is secured to welded wire fabric during construction to establish and maintain the designed layout.

There are two common approaches to positioning the tubing in the pavement. The first is to cast the tubing into a concrete subslab, where it will be protected by the concrete. The second is to incorporate it within the bedding material under the pavers. The latter option is not recommended for pavements with frequent vehicular traffic but can be used for pavements under pedestrian loading. Adequate cover is required over the tubing, typically a minimum of 1/2 in. (12.7 mm) after compaction. Bituminous bedding materials are not appropriate for this approach, in part because of the installation temperature, but also because of the layer thickness. When a sand setting bed is used, pre-compaction of the sand before screeding is recommended to minimize the occurrence of hard spots under the pavers. This is achieved by providing approximately 1/2 in. (12.7 mm) additional cover when spreading the sand, followed by several passes of the plate vibrator to compact the sand. The top surface then is loosened slightly with a hoe or rake and screeded to the appropriate level, leaving a smaller surcharge than normal.

SUMMARY

Pedestrian and light duty vehicular pavements made with clay pavers can serve in a wide variety of applications, including plazas, sidewalks and residential driveways and commercial driveways (passenger drop-offs). Many paver sizes and colors are available, as are special shapes. Proper design and construction of a pavement's base, setting bed and pavers ensure a structurally stable, durable pavement able to meet site and project requirements. Lending intrinsic character and sophistication to any space, clay pavers can be a structurally stable, economically viable pavement option.

The information and suggestions contained in this Technical Note *are based on the available data and the combined experience of engineering staff and members of the Brick Industry Association. The information contained herein must be used in conjunction with good technical judgment and a basic understanding of the properties of brick masonry. Final decisions on the use of the information contained in this* Technical Note *are not within the purview of the Brick Industry Association and must rest with the project architect, engineer and owner.*

REFERENCES

1. *Americans with Disabilities Act Accessibility Guidelines*, United States Access Board, Washington, D.C., July 2004.
2. ASTM C 33, Standard Specification for Concrete Aggregate, *Annual Book of Standards*, Vol. 04.02, ASTM International, West Conshohocken, PA, 2006.
3. ASTM C 902, Standard Specification for Pedestrian and Light Traffic Paving Brick, *Annual Book of Standards*, Vol. 04.05, ASTM International, West Conshohocken, PA, 2006.
4. ASTM C 1028, Standard Test Method for Determining the Static Coefficient of Friction of Ceramic Tile and Other Like Surfaces by the Horizontal Dynamometer Pull-Meter Method, *Annual Book of Standards*, Vol. 04.03, ASTM International, West Conshohocken, PA, 2006.
5. ASTM C1272, Standard Specification for Heavy Vehicular Paving Brick, *Annual Book of Standards*, Vol. 04.05, ASTM International, West Conshohocken, PA, 2006.
6. ASTM D 448, Standard Classification for Sizes of Aggregate for Road and Bridge Construction, *Annual Book of Standards*, Vol. 04.03, ASTM International, West Conshohocken, PA, 2006.
7. ASTM D 698, Standard Test Methods for Laboratory Compaction Characteristics of Soil Using Standard Effort (12,400 ft-lbf/ft^3 (600 kN-m/m^3)), Annual Book of Standards, Vol. 04.08, ASTM International, West Conshohocken, PA, 2006.
8. ASTM D 1557, Standard Test Methods for Laboratory Compaction Characteristics of Soil Using Modified Effort (56,000 ft-lbf/ft^3(2,700 kN-m/m3)), *Annual Book of Standards*, Vol. 04.08, ASTM International, West Conshohocken, PA, 2006.
9. ASTM D 2940, Standard Specification for Graded Aggregate Material for Bases or Sub-bases for Highways or Airports, *Annual Book of Standards*, Vol. 04.03, ASTM International, West Conshohocken, PA, 2006.
10. ASTM D 3515, Standard Specification for Hot-Mixed, Hot-Laid Bituminous Paving Mixtures, *Annual Book of Standards*, Vol. 04.03, ASTM International, West Conshohocken, PA, 2006.
11. ASTM E 303, Standard Test Method for Measuring Surface Frictional Properties Using the British Pendulum Tester, *Annual Book of Standards*, Vol. 04.03, ASTM International, West Conshohocken, PA, 2006.
12. Cooper, R.A., Wolf, E., Fitzgerald, S.G., Dobson, A., and Ammer, W., "Interaction of Wheelchairs and Segmental Pavement Surfaces," Proceedings of the Seventh International Conference on Concrete Block Paving, Cape Town, South Africa, Concrete Manufacturers Association of South Africa, October 2003.
13. *Draft Public Right-of-Way Accessibility Guidelines*, United States Access Board, Washington, D.C., 2005.
14. *Flexible Vehicular Brick Paving – A Heavy Duty Applications Guide*, Brick Industry Association, Reston, VA, 2004.
15. Wolf, E., Pearlman, J., Cooper, R.A., Fitzgerald, S.G., Kelleher, A., Collins, D.M., Boninger, M.L., Cooper, R., Smith, D.R., "Vibration Exposure of Individuals using Wheelchairs over Concrete Paver Surfaces," Proceedings of the Eighth International Conference on Concrete Block Paving, San Francisco, CA, International Concrete Pavement Institute, November 2006.

THE BRICK INDUSTRY ASSOCIATION
TECHNICAL NOTES on Brick Construction | 14A
1850 Centennial Park Drive, Reston, Virginia 20191 | www.gobrick.com | 703-620-0010
October 2007

Paving Systems Using Clay Pavers on a Sand Setting Bed

Abstract: This *Technical Note* describes the proper design and construction of pavements made with clay pavers on a sand setting bed in pedestrian and vehicular, residential and nonresidential projects.

Key Words: flexible, mortarless paving, paving, rigid, sand setting bed.

SUMMARY OF RECOMMENDATIONS:

General
- Determine if application is pedestrian, light duty vehicular or heavy duty vehicular
- Implement regular maintenance program to maintain pavers in a safe and serviceable condition

Patterns
- Use herringbone pattern for pavements subject to vehicular traffic
- Design flexibility into layout to accommodate field conditions

Drainage
- Provide a minimum slope of 1/4 in. per foot (2 percent grade)
- For concrete and impermeable bases, provide weeps through base

Edge Restraints
- For pavements subject to vehicular traffic, use concrete or stone curbs or steel angles anchored to a concrete base or foundation or a proprietary system rated for traffic
- For all other pavements, use any of the above or clay pavers in a concrete foundation, proprietary plastic or metal edge restraint systems spiked into aggregate
- Use edge restraint with vertical face at paver interface

Clay Pavers
- For most residential, pedestrian and light duty vehicular applications, such as driveways, entranceways and passenger drop-offs, use clay pavers complying with ASTM C 902
- For heavy duty vehicular applications, such as streets, commercial driveways and industrial applications, use clay pavers complying with ASTM C 1272.
- Refer to *Technical Note* 14 for additional recommendations

Joint and Setting Bed Sand
- Use concrete sand complying with ASTM C 33

Stabilized Joint Sand
- Use where potential sand loss or high water permeability is anticipated and not desired
- Follow paver manufacturer's recommendation regarding the use of stabilized joint sand or joint sand stabilizer
- Use performance history as a basis for selection

Concrete Base
- For concrete base on ground, provide control joints spaced a maximum of 12 ft (3.66 m) o.c.
- For elevated concrete slab, provide control joints through concrete slab and expansion joints through pavement above aligned with control joints
- Provide weeps through base for drainage

Base, Subbase and Subgrade
- Refer to *Technical Note* 14

INTRODUCTION

This *Technical Note* covers the design, detailing and specification of clay pavers when laid on a sand setting bed (see Figure 1). Refer to *Technical Note* 14 for clay paver design considerations, including traffic, site conditions, drainage and appearance. Sand-set pavers are the most cost-effective method of constructing a pavement made with clay pavers. The system relies upon developing interlock in the paving course, which is generated by friction between the pavers and the jointing sand. This enables the pavers to function as part of the structural pavement system.

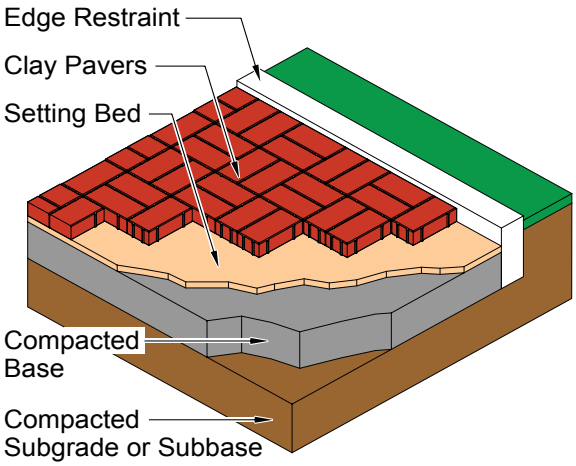

Figure 1
Typical Brick Pavement

© 2007 Brick Industry Association, Reston, Virginia

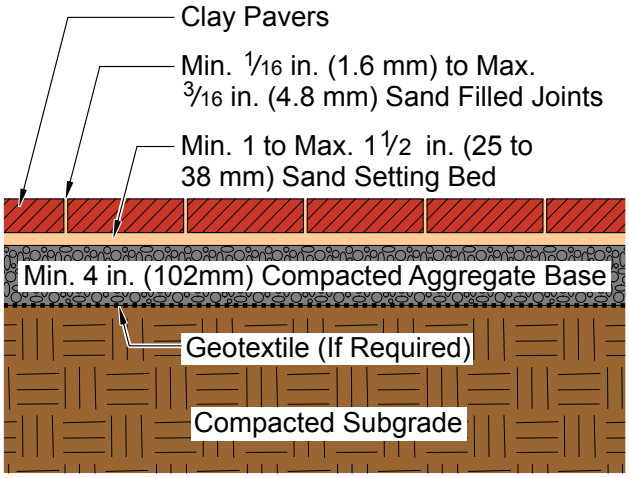

Figure 2
Typical Residential Patio or Walkway

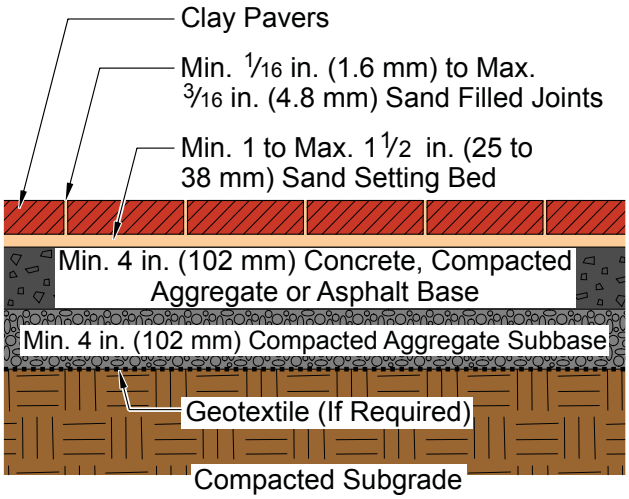

Figure 3
Typical Residential Driveway

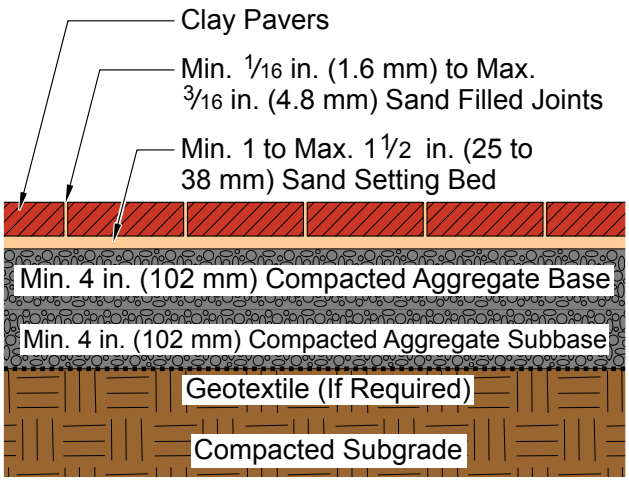

Figure 4
Typical Commercial/Pedestrian Public Plaza/Sidewalk

Applications

Clay pavers set on a sand setting bed are appropriate for virtually any paver application, ranging from pedestrian to heavy duty vehicular traffic. At a minimum, the system requires clay brick pavers and a sand setting bed, compacted after paver placement. Depending on subgrade conditions, additional layers, base and subbase may be required.

Residential Patios and Walkways. These applications are the most common and handle the lightest loads. The sand setting bed thickness should be 1 to 1½ in. (25 to 38 mm). The sand setting bed should be separated from the subgrade by a compacted aggregate base (see Figure 2). This base typically consists of coarse aggregate (gravel) of varying gradation, compacted to a minimum thickness of 4 in. (102 mm) using mechanical tamping or vibration.

Residential Driveways. The heavier and more localized loads of vehicles on driveways serving one- or two-family houses result in a thicker paving system requiring a minimum 4 in. (102 mm) compacted aggregate subbase. The base should consist of a minimum 4 in. (102 mm) layer of coarse aggregate, cast-in-place concrete or asphalt (see Figure 3).

The sand setting bed thickness should be 1 to 1½ in. (25 to 38 mm). The base typically consists of coarse aggregate (gravel) of varying gradation, compacted to a minimum thickness of 4 in. (102 mm) using mechanical tamping or vibration.

Commercial/Public Plazas and Walkways. With increased pedestrian traffic and increased risk of injury from any localized differential displacements, these types of applications require a firm pavement, similar to that of residential driveways. For plazas, however, a minimum 4 in. (102 mm) compacted aggregate base and subbase typically are used (see Figure 4). Note that for these applications on sites consisting of silty or clayey soils, geotextile should be placed on the compacted subgrade, below the subbase.

The sand setting bed thickness should be 1 to 1½ in. (25 to 38 mm). The base typically consists of coarse aggregate (gravel) of varying gradation, compacted to a minimum thickness of 4 in. (102 mm) using mechanical tamping or vibration.

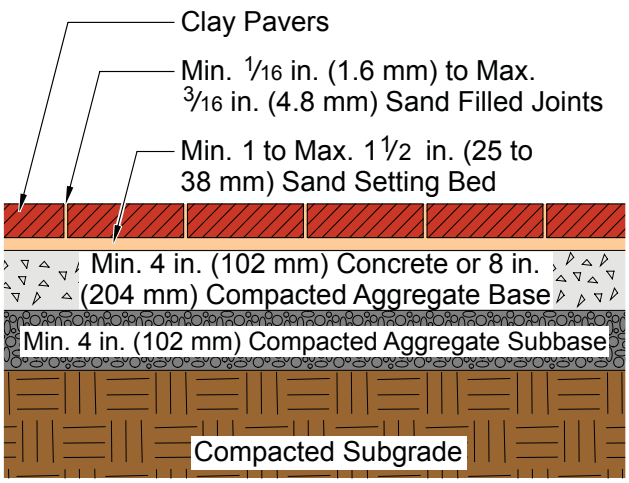

Figure 5
Typical Light Duty Vehicular

Light Duty Vehicular. For parking areas and neighborhood streets serving light duty vehicles, the brick pavement section should be similar to that of a residential driveway, but with a more substantial base. A pavement with a concrete base as depicted in Figure 5 or a thicker aggregate or asphalt base is required.

Heavy Duty Vehicular. Paving systems exposed to more than 251 daily equivalent single axle loads (ESAL) from trucks or combination vehicles having three or more loaded axles are considered heavy duty vehicular applications. Such paving systems are beyond the scope of this *Technical Note* series. For further information about heavy vehicular applications, refer to *Flexible Vehicular Brick Paving – A Heavy Duty Applications Guide* [Ref. 6].

GENERAL DESIGN AND DETAILING CONSIDERATIONS

Interlock

Sand-set pavers interlock with one another by generating friction across the joints. This is the result of tightly packing sand into the joints during the vibration process. The interlock improves as the pavement is subjected to traffic. There are three types of interlock present in a sand-set paver pavement when properly constructed: vertical, horizontal and rotational interlock. Interlocked pavers cannot be readily extracted from the pavement.

Vertical interlock allows load transfer across joints between pavers. When a load is applied to one paver, a portion is transferred through sand in the joints to adjacent pavers, as shown in Figure 6, distributing the load to a greater area and reducing the stress on the sand bed and the underlying layers. Vertical interlock allows a paving layer to act as a structural layer. Without vertical interlock, the pavers do not act as a structural layer, and localized stress on the setting bed directly under a loaded paver is increased. Pavers installed on a sand setting bed should not be laid with 1/4 in. (6.4 mm) joints, because this is too wide to achieve interlock, making the pavers unable to transfer load to adjacent pavers. The proper joint width is 1/16 to 3/16 in. (1.6 to 4.8 mm).

Rotational interlock is the result of lateral resistance from adjacent pavers and adequate edge restraints, as shown in Figure 7. It is improved with full joints that support the top of the paver. Without adequate restraint, the pavers can roll in the direction of lateral loading, which may result in an irregular surface profile.

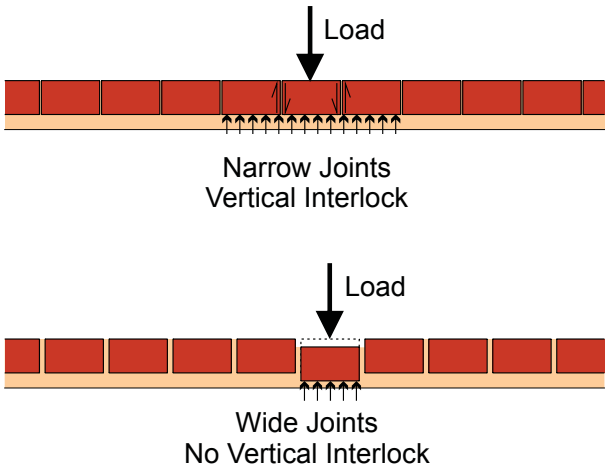

Figure 6
Vertical Interlock of Pavers

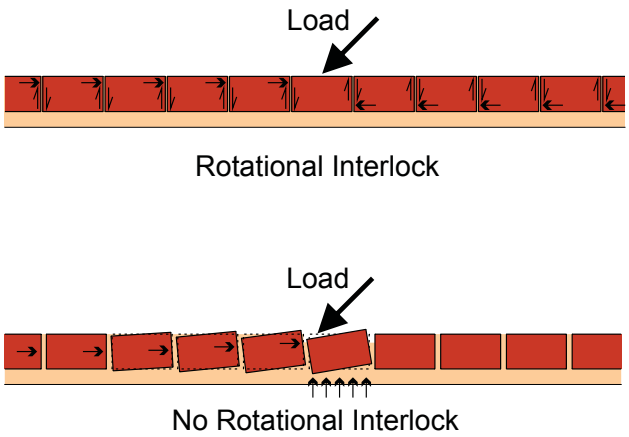

Figure 7
Rotational Interlock of Pavers

The extent of horizontal interlock depends upon the laying (bond) pattern of the pavers and the edge restraint. Patterns that have staggered joint lines allow the load to be distributed to a larger number of pavers, as shown in Figure 8. This reduces joint compressive stress and potential for horizontal creep of pavers. Continuous joints result in minimal load distribution and increased joint compressive stress, which may produce horizontal movement.

Pavement Section

Clay pavers over a sand setting bed can be installed over a flexible or rigid base, including aggregate, asphalt, cement-treated aggregate or concrete bases. For further information on bases, refer to *Technical Note* 14.

The design of the base is beyond the scope of this *Technical Note*, and the advice of a qualified and experienced pavement designer should be sought. For preliminary design, it is reasonable to assume that a minimum of 4 in. (102 mm) of concrete, cement-treated aggregate, asphalt or aggregate base will be needed for sand and gravel subgrades. For residential driveway, commercial/pedestrian and light duty vehicular applications with clay or silt subgrades, an additional 4 in. (102 mm) of aggregate subbase or base should be added to each option. Additional thickness may be required when the subgrade is susceptible to frost heave or when the pavement must support heavy axle loads from trucks.

Concrete bases should be reinforced with welded wire fabric or reinforcement bars and should have control joints spaced at 12 ft (3.66 m) intervals to control expansion and contraction. To minimize movement of slabs, detail movement joints as shown in Figure 9. Control joints in suspended structural slabs should extend through the entire slab and align with an expansion joint through the pavement above. Control joints should have dowels or a keyway to limit vertical separation across the joint.

Vehicular Traffic

For light duty vehicular paving systems, a maximum traffic speed of 30 mph (50 kph) is considered appropriate for pavers in a sand setting bed. When frequent vehicular traffic is anticipated, additional attention is required to ensure that joints between pavers remain filled with sand. Higher speed applications require more vigilance, as the interlock between pavers is reduced with sand loss. Paving systems for vehicular traffic applications usually will include a compacted subbase to distribute loads (see Figure 5).

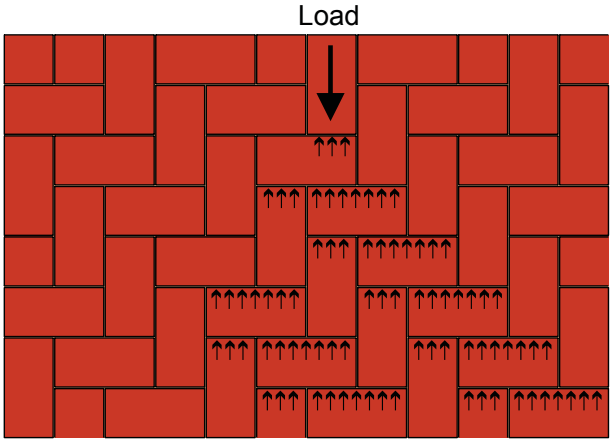

Horizontal Interlock

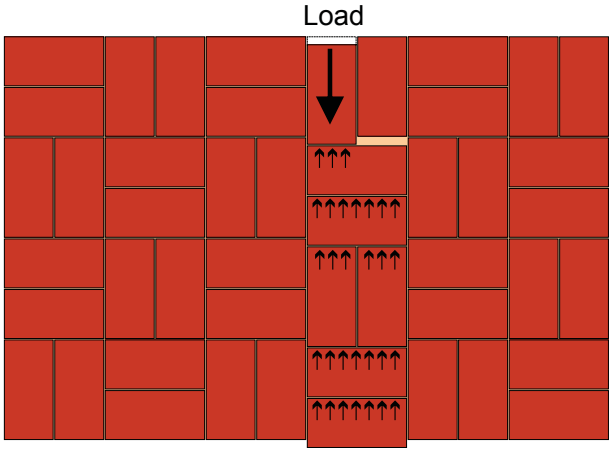

No Horizontal Interlock

Figure 8
Horizontal Interlock of Pavers

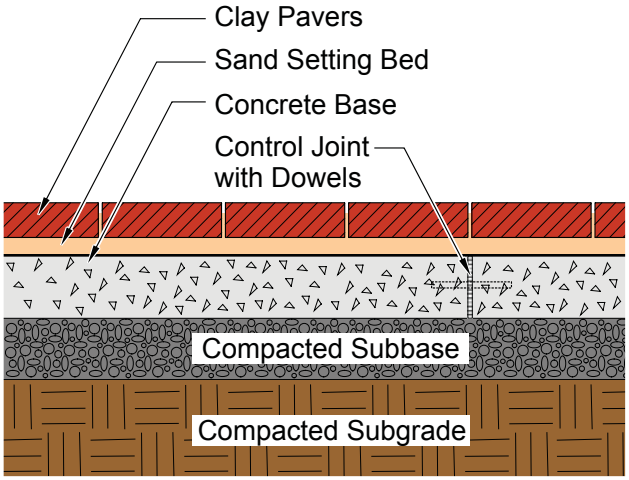

Figure 9
Control Joints

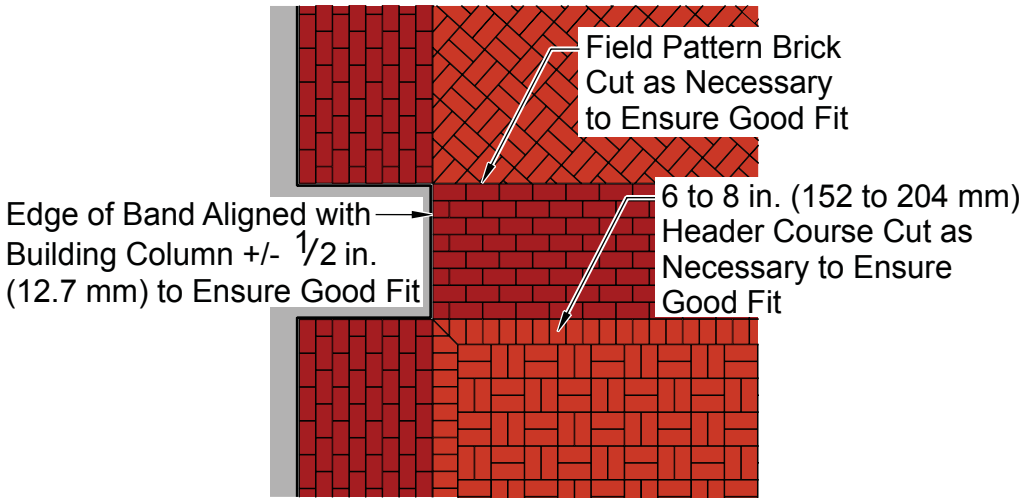

Figure 10
Pattern Options to Maintain Specified Joint Widths

The designer should consider the bond pattern for vehicular traffic applications. Any pattern may be used under foot traffic. When vehicles operate on a pavement, patterns that distribute horizontal loads (i.e., loads from turning, accelerating or braking vehicles) across multiple pavers, such as herringbone, are recommended. Patterns with continuous joints, such as stack bond or running bond, are more susceptible to creep from horizontal loading. Where such patterns are used in vehicular pavements, continuous joint lines should be oriented perpendicular to the direction of vehicle travel.

Bond Patterns/Layout

The size of pavers may influence the selection of a suitable bond pattern. Pavers for use on a sand setting bed typically are manufactured in sizes that accommodate a joint width of approximately 1/8 in. (3.2 mm) to encourage optimal interlock.

Bond patterns such as herringbone, basket weave and others make use of the 1:2 or 1:3 ratios between the pavers' length and width to maintain the pattern and joint alignment. Pavers sized to accommodate joint widths of approximately 3/8 in. (9.5 mm) do not achieve these ratios. Such pavers typically are used in pavements with mortar joints. When they are laid on a sand setting bed, only a running bond, stack bond or chevron pattern should be used, since these patterns do not depend on these ratios.

An individual clay paver's dimensions may be slightly different from the dimensions of another clay paver from the same run. The inherent variability of their dimensions is a result of their manufacturing process. Pavers may be larger or smaller within allowable tolerances of their specified size. This variability may not be consistent, because actual dimensions may be greater or smaller than the specified dimensions. As such, the pavers may not be able to be placed in a standard modular pattern. Blending of pavers from multiple cubes during installation can overcome this issue. The installer should constantly monitor paver size during installation to ensure that the bond pattern and joint size are maintained.

When designing an installation pattern with changes in bond and color, incorporating some tolerance in the placement of certain paver features is recommended. This can be achieved by using saw cut pavers at junctions of colored areas or by allowing approximate dimensions and realistic tolerances when placing certain paver features. Two examples are depicted in Figure 10.

Edge Restraints

Edge restraints are critical in a pavement with a sand setting bed to enable consistent interlock and resist horizontal loads transferred from pavers. Selection of edge restraint will depend on pavement section and use. Figure 11 (pages 6 and 7) presents various options, in increasing order of load capacity. Concrete curbs or steel angles attached to a concrete foundation or concrete base layer are the most robust edge restraints. They are recommended for all pavements subject to regular vehicular traffic. Edge restraints for other applications may include pavers bonded to a concrete foundation, and a range of proprietary plastic and metal edge restraint systems that are typically spiked into aggregate bases. Timber edging and concrete backing poured to restrain edge pavers may not be effective over the long term. It is important that all edge restraints have a vertical rather than inclined face for the pavers to butt against.

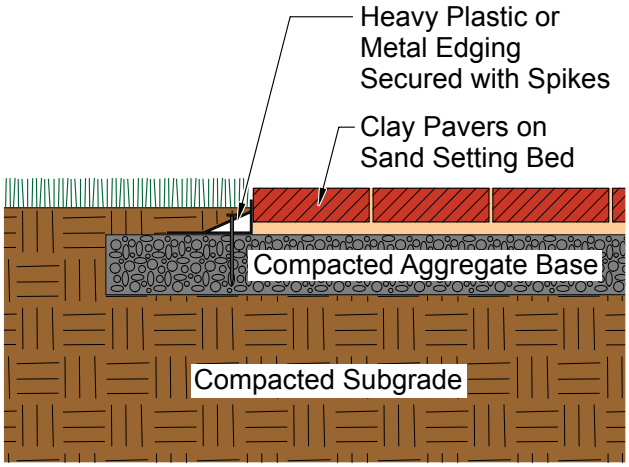

(a) Proprietary Edge Restraint System

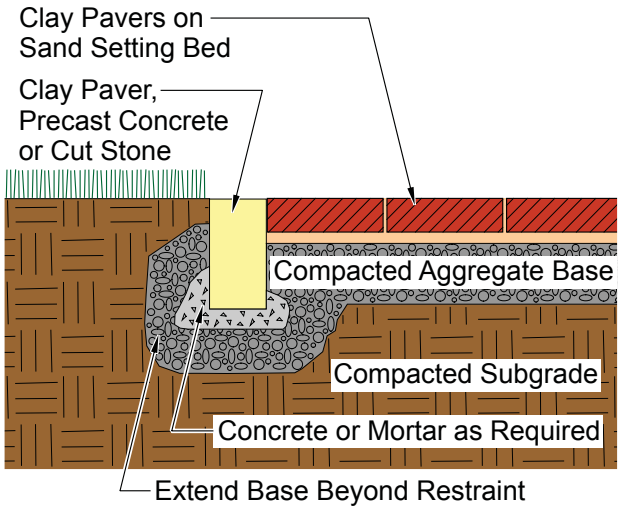

(b) Clay Paver, Precast Concrete or Cut Stone Edge Restraint

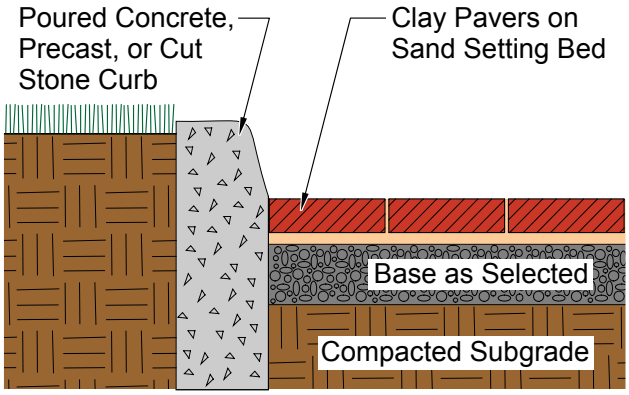

(d) Curb Edge

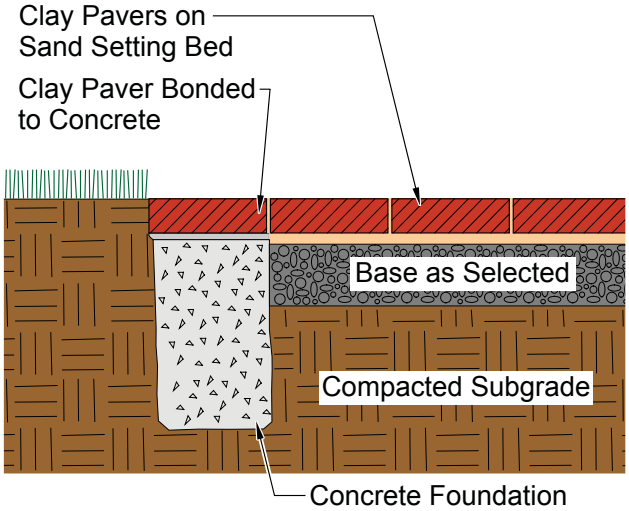

(c) Bonded Clay Paver Edge Restraint

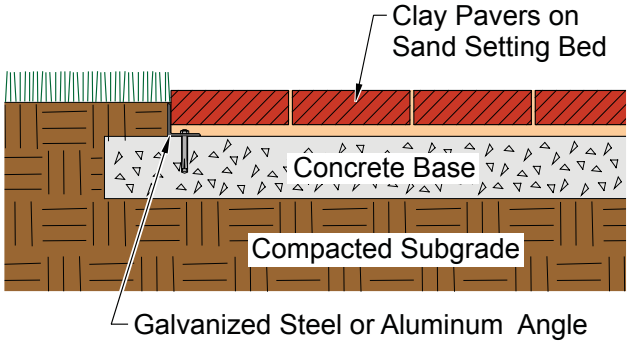

(e) Steel Angle Edge Restraint

Figure 11
Edge Restraints

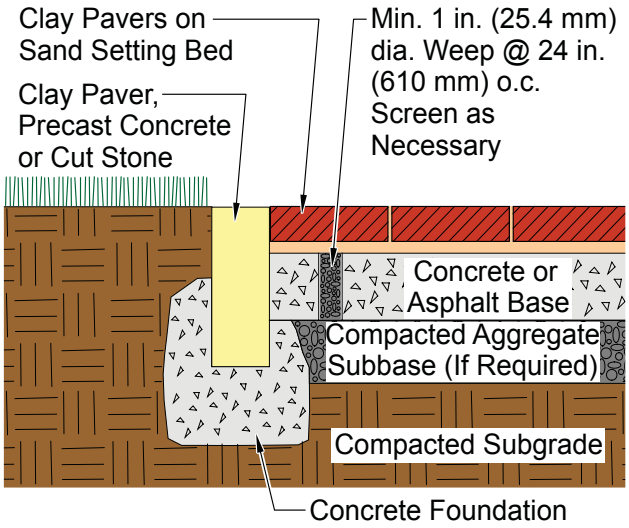

(f) Clay Paver, Precast Concrete or Stone Edge Restraint

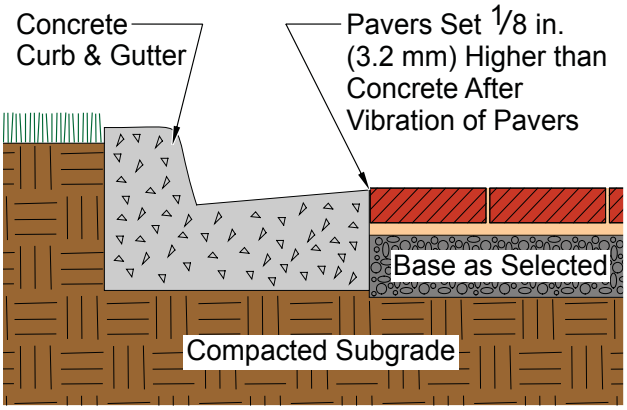

(g) Poured Concrete Curb and Gutter Edge Restraint

Figure 11 (continued)
Edge Restraints

Drainage

Adequate drainage is important to the performance and durability of any clay paving system. Water should be drained from the paving system as quickly as possible. A minimum slope of 1/4 in. per foot (2 percent grade) is recommended. Adequate drainage should be provided to ensure the integrity of all layers in a paving system.

A sand setting bed will continue to consolidate slightly after construction is complete. Pavers should be finished slightly higher than drainage inlets and other low edges of a pavement. This will minimize water puddling at these locations. Typically 1/8 in. (3.2 mm) will be adequate and will not present a short-term tripping hazard.

Over time, small amounts of water will migrate through sand joints. Consequently, a sand-set paving system with an impermeable base will require weep openings at low points in the pavement. Weep openings permit moisture to seep out of the pavement rather than saturating the setting bed. Even a well-compacted aggregate base may benefit from installing weep openings. Sand is less durable in a saturated state than when dry or slightly damp.

Several weep opening options are available. A small-diameter (1½ to 2 in. [38 to 51 mm]) pipe with ends wrapped in geotextile may be placed through the side wall of drain inlets or through edge restraints. Such weeps should be installed at spacings of 2 to 6 ft (0.60 to 1.83 m) depending on pavement geometry and profiles, environmental conditions and pavement use. As an alternative, a drainage mat may be placed vertically through the base. This may be used in conjunction with small pipes at drain inlets. For a concrete base, holes may be drilled or formed through the slab to weep water to the subbase. Locating holes away from the impact of wheel loads is necessary since subbase materials may be moisture-sensitive.

Penetrations

Large and small features that penetrate through the paver layer should be properly detailed. These features include utility covers, tree pits, light pole bases, signposts and street furniture. Features may either penetrate the entire pavement section to an independent structure or foundation, or be anchored to a concrete subslab. Such features can present some issues in cutting the pavers to form a uniform joint around them.

Some utility covers and other frames are relatively shallow, or have buttresses, inclined faces, anchor bolts or other features that may interfere with the bottom of a paver. Where possible, features should be specified,

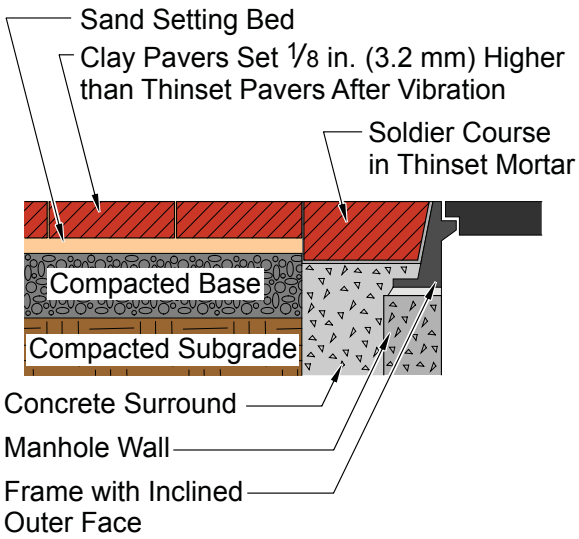

Figure 12
Large Penetration

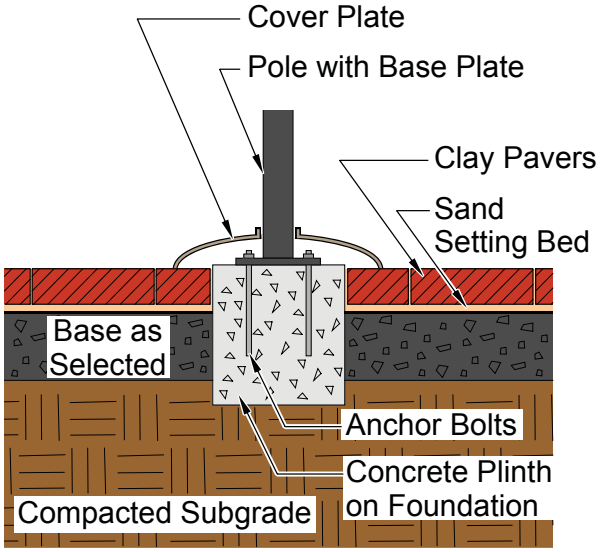

Figure 13
Small Penetration

designed and installed deeper than the setting bed. Where this is not possible, casting a concrete collar around the frame and thin-setting a header course of pavers on the concrete may clear obstructions to the sand setting bed interface, as shown in Figure 12.

Accurately cutting and placing pavers against small features may prove difficult. An alternative is to construct a concrete plinth up to the pavement surface and to install a cover plate to conceal the anchorage of the feature, as shown in Figure 13. This also allows easy access for repairs, without removing pavers.

MATERIALS

Subgrade

For design purposes, the subgrade is considered to be either sand/gravel or clay/silt. The latter are more sensitive to moisture and frost and may require the use of subbase layers and proper drainage to protect against shrinkage, swelling and frost heave. The advice of a properly qualified and experienced pavement designer should be sought in regard to the preparation of the subgrade.

Base and Subbase

Base materials for pavers laid in a sand setting bed may be of aggregate, cement-treated aggregate, asphalt or concrete. When a subbase is required, aggregate generally is used. Aggregate materials should comply with ASTM D 2940 and be compacted in accordance with ASTM D 698 to 95 percent maximum density. Asphalt should meet ASTM D 3515. Concrete should have a minimum compressive strength of 4,000 psi (27.6 MPa) and should have control joints spaced a maximum of every 12 feet (3.66 m). For a more detailed discussion of base and subbase materials, refer to *Technical Note* 14.

Geotextiles

Geotextiles are used on top of silt or clay soils to help stabilize subgrades and under sand setting beds to prevent loss of sand through weep openings and other gaps in the pavement base or at edge restraints or penetrations. The preferred type of geotextile is a woven, polypropylene fabric complying with ASTM D 4751, *Test Method for Determining Apparent Opening Size of a Geotextile* [Ref. 5], with an approximate opening size from a No. 70 to No. 100 sieve size opening. Nonwoven geotextiles can be used for light-traffic applications. Geotextiles should be lapped at the sides and ends of rolls a minimum of 12 in. (305 mm). Care should be taken to not locate laps directly under anticipated wheel paths. Geotextiles should extend 6 in. (152 mm) beyond potential areas of sand

loss. These may be adhered in place, but generally will stay in position once covered by the sand setting bed. Geotextiles should not be allowed to span over unfilled holes or pits in the surface of the base that are greater than 1 in. (25.4 mm).

Setting Bed Sand

A sand setting bed provides a strong support layer under pavers and accommodates variations in paver thickness to produce a smooth surface profile. A portion of setting bed sand penetrates the joints during vibration and initializes the development of interlock between the pavers. Sand for the setting bed should be clean, naturally occurring material with angular and subangular shaped particles, with a maximum size of about 3/16 in. (4.8 mm). Concrete sand conforming to the requirements of ASTM C 33, *Specification for Concrete Aggregate* [Ref. 1], or local department of transportation standards is recommended for use as setting bed material. This provides a more stable and durable setting bed than mason sand or screenings, which have a more rounded shape and should not be used. Sand rich in silica-based minerals is desirable, because carbonate-based minerals are softer and can break down when saturated. Manufactured limestone sand usually causes efflorescence and should be avoided unless it has a proven track record on similar projects.

Clay Pavers

A wide selection of colors and textures is available in clay pavers. Further information on clay pavers can be found in *Technical Note* 14.

Pavers generally are manufactured with their length equal to a module of their width. Two commonly specified clay paver sizes are 4 in. wide by 8 in. long (102 by 203 mm) and 3¾ in. wide by 7½ in. long (95 by 190 mm). Other similar sizes are available, such as 3⅝ in. wide by 7⅝ in. long (92 by 194 mm), and several manufacturers are able to provide custom sizes. Common specified thicknesses are 1½ in. (38 mm), 2¼ in. (57 mm) and 2¾ in. (70 mm) [2⅝ in. (67 mm) excluding chamfered edge].

All clay pavers covered by ASTM C 902, *Specification for Pedestrian and Light Traffic Paving Brick* [Ref. 3], and ASTM C 1272, *Specification for Heavy Vehicular Paving Brick* [Ref. 4], can be installed on a sand setting bed. The designer should select the appropriate Application, Type and Class of the paver for the project based on aesthetics, use, abrasion resistance and the required resistance to damage from weather exposure. For more detailed information on specifying clay pavers, refer to *Technical Note* 14.

When square-edged pavers or pavers without lugs are laid with sand joints, care should be taken to ensure that they do not make direct contact with or lip under adjacent pavers. A minimum 1/16 in. (1.6 mm) wide sand-filled joint should separate each clay paver to minimize potential chipping. However, the maximum joint width should be no more than 3/16 in. (4.8 mm) to minimize the potential for horizontal movement under vehicular traffic. If pavers with spacers and/or a rounded or chamfered edge are installed, there is less potential for direct paver contact. When lugs are used, the potential for creep is reduced.

Jointing Sand

Sand within pavement joints creates interlock between pavers by generating friction across the joint. Larger particles present in joints reduce the potential for lateral movement. Finer particles act to reduce contact stresses around the larger particles, reducing the potential of the particles breaking down. The sand also accommodates the variations in paver size and reduces the potential for contact between pavers that can lead to chipping. ASTM C 33 concrete sand should be placed in joints before vibration to maximize interlock at the bottom portion of joints. However, coarse particles that do not fall into joints should be brushed off the pavement surface rather than worked in. After vibration, finer jointing sand may be placed so that it penetrates to the bottom of the joints and achieves better filling. When the typical joint dimension exceeds 3/16 in. (4.8 mm), stabilized sand or joint sand stabilizer should be used.

Joint Sand Stabilizers

In conditions where potential sand loss or high joint permeability may not be desirable, a joint sand stabilizer is recommended. These conditions include intensive cleaning practices, high surface water flows and flat areas with moisture-sensitive subgrades. There are several different types of joint sand stabilizers. These include breathable polymeric liquids that can be sprayed onto the pavement surface and squeezed into the joints with a squeegee, as

well as dry products that can be mixed with the joint sand before installation. Pretreated sands also are available for joint filling. Strict adherence to the stabilizer manufacturer's recommendations is required to achieve successful installations. When selecting a stabilizer, it is important to choose one with a proven history that does not discolor the surface or peel over time. The paver manufacturer's recommendation regarding joint sand stabilizers should be followed. Joint sand stabilizers should be applied to the completed paver surface. Stabilizers should be applied to the pavement surface before the application of other coatings to enhance the appearance of the pavers or to protect against staining. For further guidance on selecting coatings for use on brick pavements, refer to *Technical Note* 6A.

INSTALLATION AND WORKMANSHIP

Subgrade

The subgrade should be brought to the proper level and cleared of organic material. Compaction should comply with ASTM D 698 to 95 percent maximum dry density for clay and 100 percent maximum dry density for sand/gravel. For a more detailed discussion of subgrade preparation, refer to *Technical Note* 14.

Base and Subbase

Base and subbase materials should be placed per the design. Aggregate should be compacted in accordance with ASTM D 698 to 95 percent maximum density. The maximum variation under the setting bed should be +/- 3/16 in. (4.8 mm) when a 10 ft (3.05 m) straightedge is laid on the surface. The minimum slope of the concrete base surface should be 1 in. (25.4 mm) in 4 ft (1.22 m) to allow for drainage. For a more detailed discussion on the installation of base and subbase materials, refer to *Technical Note* 14.

Setting Bed

Whenever possible, the direction of installation should be planned to protect the paving against premature use or damage by rain or other construction activities. The surface of the underlying base material should be thoroughly clean and dry before installation of the bedding sand. Elevations should be verified to ensure that the sand setting bed will be a consistent thickness after compaction. The setting bed should not be used to bring the pavement to the correct grade. Isolated high and low spots should be corrected before sand placement to avoid an uneven pavement surface resulting from variable sand setting bed thicknesses. Lines should be established for setting out the pattern. The contractor should become aware of size variations in the pavers to maintain the pattern without localized opening or closing of joints to meet a fixed edge. All areas of potential sand loss should be covered with geotextile.

Screed rails should be set on the surface of the base to proper line and level. They are typically placed 8 to 12 ft (2.44 to 3.66 m) apart, or closer when working on a grade. An allowance should be made in the thickness of the setting bed for compaction of bedding sand as pavers are installed, as well as additional consolidation in service. An experienced contractor will be aware of the proper thickness for different conditions to achieve the correct long-term surface profiles. The bed thickness should be established so that when the pavers are compacted, their top surface will be 1/8 in. (3.2 mm) above the required grades to allow for limited settling in service.

To prevent disturbance, setting bed sand should not be spread too far ahead of the paver laying face. Voids left after removing the screed rails should be filled. The screeded bedding sand may be affected by wind or rain as well as by wayward construction operations. If sand is disturbed, it should be loosened and rescreeded. Extensive areas of screeded sand should not be left overnight unless they are properly protected from disturbance and moisture. Moisture content of setting bed sand should be kept as uniform as possible to minimize undulations in the pavement surface. The sand should be kept in a damp condition conducive to packing. Water should not be applied except by very light misting. Stockpiled sand should be covered to protect it from wind and rain.

Paver Installation

The pavers are laid on the setting bed working away from an edge restraint or the existing laying face while following the pattern lines that have been established. Full pavers should be laid to the required pattern with 1/16 to 3/16 in. (1.6 to 4.8 mm) wide joints. The optimum joint width for vehicular traffic is between 1/16 and 1/8 in. (1.6 and 3.2 mm), but some wider joints may be required with Application PS pavers, and particularly with

Application PA pavers. Lugs enable the correct joint width to be achieved when the pavers are placed in contact with one another. Pavers should not be forced together, resulting in excessive contact, because this may cause the pavers to chip during installation or compaction. At least two cubes of each color of pavers should be drawn from at one time, and the manufacturer's recommendations on color blending should be followed. The pavers should be adjusted to form straight pattern lines while maintaining the correct joint widths.

Several feet of pavers should be installed before beginning to add cut pavers as infill against edge conditions. Bench-mounted masonry saws are the best means of cutting the pavers to achieve a neat edge and a vertical cut face. Use of a wet saw or dust collection system is recommended to control dust. Guillotine cutters also may be used, but their cuts typically are not as straight and neat. Convex curves can be formed using multiple cuts, but this requires a skilled craftsman to meet allowable joint tolerances. Concave curves are very difficult to form and should be avoided when possible.

Pavers should be compacted at the end of each day to prevent any damage while left unattended. The pavement surface should be compacted using a plate compactor. These typically have a plate area of 2½ to 3 sq ft (0.23 to 0.28 sq m) and operate at a frequency of 80 to 100 Hz. To prevent pavers from chipping during vibration, a little bedding sand material can be swept into the joints, or the underside of the plate compactor can be fitted with a rubber mat. Pavers also can be covered with a sheet of geotextile or sheets of plywood during vibration For molded pavers, vibration is especially important since irregularities and dimensional variations on the underside could lead to air gaps or improper support if not properly compacted into the sand setting bed. Compaction should not be carried out within 4 ft (1.2 m) of unfinished edges.

The vibrated surface should be slightly above adjacent pavement surfaces, drainage inlets and channels to allow for secondary compaction of the bedding layer under traffic. The maximum variation in surface profile should be less than 3/16 in. (4.8 mm) in 10 ft (3.05 m). Water should drain freely from the surface and not form puddles. Lipping between adjacent pavers should not be greater than 1/8 in. (3.2 mm) if the pavers have chamfers, or 1/16 in. (1.59 mm) if they have square edges.

After vibration of the pavers to finished elevations, dry fine-grained jointing sand is brushed over the surface of the pavement and additional vibration is undertaken until all of the joints are completely filled with sand. Surplus jointing sand should be maintained on the surface to enhance the process of joint filling. Typically the sand should be level with the bottom of the chamfer or approximately 1/8 in. (3.2 mm) below the top of square edge pavers.

Joint Sand Stabilizers

The paver manufacturer's recommendation regarding joint sand stabilizers should be followed. Jointing sand that is pretreated with a stabilizer product should be brushed or blown off the pavement surface as soon as possible and not be allowed to become stuck in the surface texture of the pavers. If pretreated sand or a joint sand additive is used, the stabilizer should be activated by lightly misting the surface with water. If a liquid joint sand stabilizer is used, it should be sprayed onto the pavement surface and forced into the joints with squeegees. It may be necessary to fill the tops of the joints with the liquid several times before it sets to achieve adequate penetration. The stabilizer manufacturer's instructions should be followed closely, because each stabilizer is slightly different. Probing several joints to verify that the sand is stabilized to an adequate depth of approximately two times the joint width — rather than just forming a crust — is recommended.

MAINTENANCE

Cleaning

Sand-set pavers can be kept clean in most environments by regular sweeping. In situations that lead to a greater degree of buildup of grease, tire marks or other stains, the pavers can be cleaned by pressure-washing. The sand-filled joints generally are resistant to this treatment if the nozzle surface is clear and the water jet is not directed along the joints. Aggressive pressure-washing can cause localized removal of the joint filling material and can even undermine the pavers. More stubborn stains, including paint and gum, can be cleaned by scraping off the hard residue and then scrubbing with a stiff-bristled brush and a proprietary cleaner or scouring powder. In damp or shady areas where moss and lichen have grown in the joints, these can be killed with a bleach-water mixture or with proprietary treatments.

Snow Removal

Snow prevention and removal can be carried out by hand, by machine or by chemicals. Hand methods include shovels and brooms. Mechanical methods include snow blowers, snowplows, and buckets or brushes attached to tractors. Shovel and machine removal methods can chip the edges of the pavers, particularly if excessive lipping is present. This equipment should be properly adjusted so that it does not damage the pavement surface.

Skid-steer snow removal equipment also may move pavers, causing distortion of pattern lines and some chipping of the pavers if the equipment is driven aggressively. When tractor and particularly skid-steer mounted equipment is used, the pavement must be able to support the wheel loads without damage.

A range of anti-icing and deicing chemicals are used for pavements. Deicing chemicals can cause thermal shock in a pavement by “supercooling” the pavement surface. This can lead to spalling or surface damage on pavers of Class NX or MX pavers. Deicing agents should be used with care, as chemical residue left on the surface can penetrate into the joints and result in staining and efflorescence. Class NX should not be used where subject to freezing.

Resanding

Over time, due to wind, rain and other means, the sand within the top portions of joints can be eroded. Therefore, the joints should be periodically resanded using the same methods described above for applying jointing sand after vibration of the pavers.

Repairs

Underground utilities frequently pass beneath paved areas on congested sites. Access to these utilities frequently is required for repair or to install new lines. Sand set pavers readily accommodate such work, as they can be removed and reinstated with little evidence of the work having been carried out. Repairs to the paving also can be made if they are overloaded or otherwise damaged.

Removal can be undertaken by prying or breaking out the initial paver so that it can be removed without damaging adjacent units. It is then possible to work the adjacent pavers loose using a hammer and chisel or pry bars in the joints and under the paver. Some chipping of the pavers should be expected, and a few spare pavers will be required for reinstatement. The bedding sand can be removed as necessary. Traffic should be kept at least 4 ft (1.2 m) from the unrestrained edge. If a trench is open for a significant amount of time, the adjacent pavers should be temporarily restrained to stop them from moving laterally. Trenches should be filled with proper care paid to compaction of the backfill. The base should be replaced to match the original section.

To reinstall the pavers, the bedding sand should be replaced with an adequate pressure to allow for compaction. The pavers should be replaced in the appropriate pattern and fresh sand spread into the joints. The repair area should be leveled by hammering on a wooden pack if the area is small or with a plate vibrator if it is large enough. The joints should be refilled with sand and new stabilizer applied if necessary.

SUMMARY

Pedestrian and light duty vehicular pavements of clay pavers laid on a sand setting bed provide the most cost-effective system for pedestrian and light duty vehicular pavement. When properly constructed, the interlock of the pavers provides the necessary stability for the desired service life of the pavement. This *Technical Note* provides the basic information required to properly select materials, design, detail and construct brick pavements over sand setting beds. Further information about the properties of other brick pavements and concepts not unique to sand setting beds is discussed in the *Technical Note* 14 series.

> *The information and suggestions contained in this* Technical Note *are based on the available data and the combined experience of engineering staff and members of the Brick Industry Association. The information contained herein must be used in conjunction with good technical judgment and a basic understanding of the properties of brick masonry. Final decisions on the use of the information contained in this* Technical Note *are not within the purview of the Brick Industry Association and must rest with the project architect, engineer and owner.*

REFERENCES

1. ASTM C 33, Standard Specification for Concrete Aggregate, *Annual Book of Standards*, Vol. 04.02, ASTM International, West Conshohocken, PA, 2006.
2. ASTM C 144, Standard Specification for Aggregate for Masonry Mortar, *Annual Book of Standards*, Vol. 04.05, ASTM International, West Conshohocken, PA, 2007.
3. ASTM C 902, Standard Specification for Pedestrian and Light Traffic Paving Brick, *Annual Book of Standards*, Vol. 04.05, ASTM International, West Conshohocken, PA, 2007.
4. ASTM C 1272, Standard Specification for Heavy Vehicular Paving Brick, *Annual Book of Standards*, Vol. 04.05, ASTM International, West Conshohocken, PA, 2007.
5. ASTM D 4751, Standard Test Method for Determining Apparent Opening Size of a Geotextile, *Annual Book of Standards*, Vol. 04.13, ASTM International, West Conshohocken, PA, 2007.
6. *Flexible Vehicular Brick Paving – A Heavy Duty Applications Guide*, Brick Industry Association, Reston, VA, 2004.