City of Pawtucket, RI

***** Addendum #1 *****

RFP # 14-084
Main Street Bridge Repairs

January 12, 2015

Following the mandatory pre-bid meeting held on Tuesday, January 6, the City of Pawtucket ("the City") has revised the submission schedule associated with its Request for Proposals (RFP) #14-084 as follows:

Milestone	Date in Original RFP	**Revised Date**
Requests for Information Due	January 15, 2015	**February 4, 2015**
Proposal (Bid) Due	January 22, 2015	**February 12, 2015**

The City hereby advises bidders that a second addendum to this RFP will be issued no later than January 26, 2015. This addendum will address certain design-related inquiries posited by bidders at the pre-bid meeting, among other items.

Additionally, The City offers the following responses and clarifications to certain administrative and design inquiries posited by bidders at the pre-bid meeting:

Q: What is the Contractor's timeframe to complete the project?

A: The Contractor shall achieve substantial completion of the project by November 15, 2015. Please consider this a clarification of the City's response offered at the pre-bid meeting.

Q: Is the bridge subject to a load restriction?

A: No. Per the most recent (9/3/2014) Rhode Island Department of Transportation (RIDOT) inspection of this bridge, a load restriction posting is not required. The RIDOT inspection report is attached to this addendum.

Q: Are any Disadvantaged Business Enterprise (DBE) requirements applicable to this project?

A: The project will be funded in part by a City bridge repair bond, and Community Development Block Grant (CDBG) issued by the US Department of Housing and Urban Development (HUD). The DBE requirements associated with these funding sources are described in Appendix B and Section 15.0 of the RFP, respectively. These requirements include, but are not limited to:

- If, because of the award of this project, and in order to complete the project, the Contractor hires new staff, then the Contractor is required to extend the hiring opportunity to low-to-moderate income residents in the area of the project, and properly document this effort.
- If the Contractor hires a subcontractor(s) to assist with the project, they must extend the subcontracting opportunity to registered DBE firms, and properly document this effort.

Please refer to the aforementioned sections of the RFP, as well as the attached HUD FAQs regarding Section 3 requirements, for further clarification of these requirements.

Q: Has National Grid issued a work order ticket for this project yet?

A: No. The City and National Grid continue to work towards executing an agreement that will enable National Grid's work to proceed coincident with the Contractor's work on this project. In the event that the City and/or National Grid create delays in this process, the City acknowledges that this may constitute just cause for extension of the Contractor's timeframe to complete the project. This resulting extension shall not constitute an adjustment to the Contractor's bid price.

Q: What is the extent of National Grid's scope of work in terms of trenching and surface restoration?

A: During the pre-bid meeting, National Grid representative Jim Paulette confirmed that National Grid is responsible for all trench excavation, pipe installation, trench backfill, and surface restoration associated with its gas main repair. The Contractor shall be responsible for the removal of any temporary bituminous patch and the excavation required to place the required hot mix asphalt, as shown on the Site Plans included in the RFP.

Q: Which party to the construction contract shall be responsible for coordinating work with Verizon and National Grid?

A: As discussed during the pre-bid meeting, the Contractor shall be responsible for coordinating their operations with those of National Grid and Verizon to ensure the on-time delivery of the project. The City and the Project Engineer shall be involved in decisions involving anything other than small changes to the scope of work. It is anticipated that the latter of these coordination efforts will be

addressed during the initial pre-construction meeting and subsequent progress meetings held amongst the project management team during construction.

Q: What permits are applicable to the project, and which of those have been secured?

A: The City has confirmed the following permit applicability regarding this project:

1. Section 106 Review from the Rhode Island Historic Preservation and Heritage Commission (RIHPHC). The RIHPHC's letter of review of this project is attached to this addendum.
2. Building Permit - the City has confirmed that a building permit is not required.
3. Rhode Island Department of Health (RIDOH) Asbestos Abatement – the City has confirmed that proper asbestos abatement procedures must be undertaken in connection with the required removal of transite duct existing underneath the existing cantilevered sidewalk. As noted during the pre-bid meeting, this permitting (and construction) effort shall be Verizon's responsibility during this project.
4. RIDOH Lead Removal – the Contractor shall be responsible for lead paint removal/containment and permitting required in connection with the project; in particular, the removal of the existing pedestrian rail and the existing sidewalk support members. The Contractor's responsibilities in this regard will be clarified in the forthcoming second addendum.

Q: There are no electrical items within the bid form.

A: The electrical items will be added to the bid form in the forthcoming second addendum.

Q: For scheduling purposes, what will be the review times for shop drawings/submittals and what are the expected utility work times and schedules?

A: This question will be addressed in the forthcoming second addendum.

Q: Who will be responsible for Verizon's access during their work?

A: Verizon will be responsible for providing access to the required areas.

Q: Please provide a copy of the pre-bid meeting sign in sheet in the addendum.

A: A copy of the sign in sheet is attached.

Andrew Silvia, PE

Chief of Project Development

Pre-Bid Meeting Sign In Sheet

Sign-In Sheets
Main Street Bridge Repairs
14-084

Company Name	Rep. Name	Fax #	E-mail address	How did you hear about this RFP? News Paper	City Website	State Website	Word of Mouth
CARDI Corp	Eric Hammerschlag	401-732-0006	eric h@ Cardi.Com				
Northern Const.	John DiNito	781-340-5708	JDiNito@ Northern Construction.com				
Narragansett Improvement	James Klowan	401 351 6444	JKLOWAN@NICORF.com				
~~Nick Piampiano~~ Manutort Cons	Nick Piampiano	401 333-2550	Npiampiano@manutort.com				
~~Jack Milburn~~ HKS Const Holdg	Jack Milburn	401 847 7350	Info@HKandS.Com				
New England Building & Bridge	Peter Donatelli	401-830-5776	Pdonatelli@nebbco.com				
GRA	JOHN ST. CYR	401 726-4084	JSTCYR@GRAENGS.COM				
GRA	RICHARD CONCA	401-725-1833	RCONCA@GRAENGS.com				
National Grid Gas	Jim Paulette	401-465-8580	jim.paulette@nationalgrid.com				
VERIZON	RON ROBILLARD	401-727-8538	RONALD.W.ROBILLARD@VERIZON.COM				

Please leave your business card. Thank You!

HUD Section 3 FAQs

Frequently Asked Questions (FAQs)

Section 3 of the Housing & Urban Development Act of 1968

GENERAL QUESTIONS 1
APPLICABILITY 4
CONSISTENCY WITH OTHER LAWS..... 8
RECIPIENT RESPONSIBILITIES 9
SECTION 3 PREFERENCE..... 11
ECONOMIC OPPORTUNITIES/NUMERICAL GOALS 14
RECORDKEEPING AND REPORTING 16
SECTION 3 COMPLAINTS 18

GENERAL QUESTIONS

1. What is Section 3?

Section 3 is a provision of the Housing and Urban Development Act of 1968. The purpose of Section 3 to ensure that employment and other economic opportunities generated by certain HUD financial assistance shall, to the greatest extent feasible, and consistent with existing Federal,
State and local laws and regulations, be directed to low- and very low income persons, particularly those who are recipients of government assistance for housing, and to business concerns which provide economic opportunities to low- and very low-income persons.

2. What does “To the Greatest Extent Feasible Mean?

   By to the “Greatest Extent Feasible”, the Department means the every effort must be made to comply with the regulatory requirements of Section 3. By this, the Department means that recipients of Section 3 covered financial assistance should make every effort within their disposal to meet the regulatory requirements. For instance, this may mean going a step beyond normal notification procedures for employment and contracting procedures by developing strategies that will specifically target Section 3 residents and businesses for these types of economic opportunities.

3. What does the term “Section 3 resident” mean?

   A “section 3 resident” is: 1) a public housing resident; or 2) a low- or very low-income person residing in the metropolitan area or non-metropolitan county where the Section 3 covered assistance is expended.

4. What does the term Section 3 Business Concern mean?

Section 3 business concerns are businesses that can provide evidence that they meet one of the following criteria:

a) 51 percent or more owned by Section 3 residents; or

b) At least 30 percent of its full time employees include persons that are currently Section 3 residents, or were Section 3 residents within three years of the date of first hire*; or

c) Provides evidence, as required, of a commitment to subcontract in excess of 25 percent of the dollar award of all subcontracts to business concerns that meet one of the first two qualifications above.

_____

*Example: Alysha was an unemployed Section 3 resident that was first hired by ABC Company on January 1, 2011. She received a raise of $2,500 in March 2012, thereby boosting her household income above the local low income level. ABC Company may continue to count Alysha as one of their Section 3 employees until December 31, 2013 (i.e. within three years of the date of first hire).

5. How does Section 3 differ from the Minority Business Enterprise/Women Business Enterprise programs?

   Section 3 is both race and gender neutral. The preferences provided under this regulation are based on income-level and location. Section 3 regulations were designed to encourage recipients of HUD funding to direct new employment, training, and contracting opportunities to low-income residents, and the businesses that employ these persons, within their community regardless of race and/or gender.

   To learn more about the Minority Business Enterprise and Women Business Enterprise programs, please contact HUD's Office of Small and Disadvantaged Business Utilization at 202-708-1428, or visit their website, located at: http://portal.hud.gov/portal/page/portal/HUD/program_offices/sdb.

6. How are "low-income" and very low-income determined?

   Low- and very-low-household income limits are determined annually by HUD. These limits are typically established at 80 percent and 50 percent of the median income for each locality by household size or the number of people residing in one house. HUD income limits may be obtained from: http://www.huduser.org/portal/datasets/il.html

7. What are "metropolitan areas" and "non-metropolitan counties?"

Metropolitan area means a metropolitan statistical area (MSA), as established by the Office of Management and Budget. A non-metropolitan county means any county outside of a metropolitan area.

A current list of MSAs can be found at:
http://www.census.gov/population/www/metroareas/metrodef.html

8. What is a "new hire"?

   A new hire means a full-time employee for a new permanent, temporary, or seasonal position that is created as a direct result of the expenditure of Section 3 covered financial assistance.

9. Can laid-off workers that are "re-hired" as a result of a HUD-funded project considered new hires?

   Yes. Any employee that was not on the payroll of a recipient, developer, or contactor on the day that Section 3 covered assistance was provided can be counted towards the Section 3 minimum numerical goal for employment.

10. What is a Section 3 covered project?

    A Section 3 covered project involves the construction or rehabilitation of housing (including reduction of lead-based paint hazards), or other public construction such as street repair, sewage line repair or installation, updates to building facades, etc.

11. Who is considered a recipient of Section 3 funding?

    A recipient is any entity which receives Section 3 covered assistance, directly from HUD or from another recipient (i.e., a PHA; unit of State or local government; property owner; developer; etc). It does not include contractors or any intended beneficiary under the HUD program to which Section 3 applies, such as a homeowner or a Section 3 resident.

12. Which recipient agencies (or sources of HUD financial assistance) are required to comply with Section 3?

    Public Housing Authorities (PHAs) regardless of size or number of units are required to comply with Section 3. One exception is PHAs that only receive or administer tenant-based Housing Choice (Section 8) Vouchers and do not utilize any of the financial assistance described above. Although they are exempt, compliance with Section 3 is encouraged.

Section 3 also applies to recipients of more than $200,000 from housing and community development programs. The following are a list of examples of such funds:

- Community Development Block Grant (CDBG)
- HOME Investment Partnership
- Neighborhood Stabilization Program Grants (NSP 1, 2 & 3)

- Economic Development Initiative (EDI)/Brownfield Economic Development Initiative Grants
- Housing Opportunities for Persons with AIDS (HOPWA)
- Homeless Assistance Grants (ESG)
- University Partnership Grants
- Economic Stimulus Funds (including CDBG-R and CFP Supplemental)
- 202/811 Grants
- Lead Hazard Control Grants

*Note: The requirements of Section 3 typically apply to recipients of HUD funds that will be used for housing construction, rehabilitation, or other public construction. Contact the Economic Opportunity Division at section3@hud.gov to determine applicability to a particular project/activity.

13. Can a non-profit organization be considered a "business concern" for the purposes of Section 3?

    Yes. A non-profit organization can be a legitimate business concern. Non-profit organizations must meet the criteria of a Section 3 business concern as defined at 24 CFR Part 135.5 in order to receive Section 3 preference.

14. What is a Service Area?

    The Service area is the geographical area in which the persons benefiting from the Section 3 covered project reside. The Service Area shall not extend beyond the unit of local government in which the Section 3 covered financial assistance is expended.

APPLICABILITY

15. What is Section 3 covered assistance?

    Section 3 covered assistance includes:

    - Public and Indian Housing Operating Subsidy; Capital Funds; or Modernization assistance; and

    - Housing and community development assistance expended for housing rehabilitation, housing construction, or other public construction.

16. What are funding thresholds and how do they apply to Section 3 covered financial assistance?

    Funding thresholds are minimum dollar amounts that trigger Section 3 requirements. There are no thresholds for public and Indian housing (PIH) programs. The requirements of Section 3 apply to all PIH programs regardless of the amount of assistance received from HUD.

    The Section 3 requirements apply to recipients of Housing and/or Community Development Assistance exceeding $200,000 combined from all sources in any one year. Section 3 covers the expenditure of any portion of those funds for any activity that involves housing construction, rehabilitation, or other public construction.

    For example, a city **receives** $600,000 for CDBG, $150,000 in HOME Funding, and $75,000 in NSP funding. This represents a total of $825,000 in housing and community development assistance. As such, any construction or rehabilitation activities funded by the city using those funds is covered by Section 3.
    .

17. Do the requirements of Section 3 apply to grantees on a “per project” basis?

    No. Any agency that receives covered assistance that exceeds $200,000 is required to comply with the requirements of Section 3 whenever any projects involving housing construction, rehabilitation, or other public construction are administered, regardless of the actual dollar amount of covered assistance that is invested into the individual project/activity.

18. If a project is funded with non-HUD assistance, do the requirements of Section 3 still apply?

    Section 3 applies to projects that are fully or partially funded with HUD financial assistance. Projects that are financed with state, local or private matching or leveraged funds used in conjunction with HUD funds are covered by Section 3.

19. What dollar threshold amounts apply to contractors/subcontractors?

    All contracts (or subcontracts) funded with Public and Indian Housing assistance, regardless of dollar amount or type of contract, is subject to the requirements of Section 3.

    With respect to recipients of Housing and/or Community Development funding, all contractors or subcontractors that receive covered contracts in excess of $100,000 for housing construction, rehabilitation, or other public construction are required to comply with the requirements of Section 3.

20. What responsibilities do contractors/subcontractors have if they receive Section 3 covered contracts?

    If the contractor/subcontractor has the need to hire new persons to complete the Section 3 covered contract or needs to subcontract portions of the work to another business, they are required to direct their newly created employment and/or subcontracting opportunities to Section 3 residents and business concerns. The same numerical goals apply to contractors and subcontractors (i.e., 30 percent of new hires, 10 percent of construction contracts, and 3 percent of non-construction contracts). In addition, the contractor/subcontractor must notify the recipient agency about their efforts to comply with Section 3 and submit any required documentation.

21. Do the Section 3 requirements apply to material only contracts?

    No. Section 3 does not apply to material only contracts or those that do not require any labor. For example, a contract for office or janitorial supplies would not be covered by Section 3. In this example, Section 3 would be encouraged but not required. However, a contract to replace windows that includes the removal of existing windows and the installation of new windows would be covered.

22. Are maintenance projects covered by Section 3?

    Yes, but only for PIH funded programs administered by Public Housing Authorities.

23. Does the reduction and abatement of lead-based paint hazards constitute housing rehabilitation?

    Yes, reduction and abatement of lead-based paint hazards does constitute housing rehabilitation and is covered by Section 3.

24. Are demolition projects covered by the requirements of Section 3?

    Yes. Recipients of Section 3 covered assistance should make efforts to award a minimum of ten percent of the total dollar amount of all demolition contracts to Section 3 businesses.

25. Are professional service contracts covered under Section 3?

    Yes, the term “Section 3 covered contract” includes professional service contracts provided that the work to be performed is generated by the expenditure of Section 3 covered Public and Indian housing assistance, or for work arising in connection with projects involving housing rehabilitation, housing construction, or other public construction.

26. Does Section 3 apply to new hiring by a CDBG-Entitlement recipient?

Yes. If the recipient intends to use its HUD allocation to hire additional staff person(s) to perform work related to housing construction, rehabilitation, or other public construction, then the position(s) is covered by Section 3. However, if the local municipality uses a civil servant applicant process to hire new employees, compliance with the requirements of Section 3 may not be feasible.

27. Does Section 3 apply to new hiring by a Public Housing Authority?

    Yes. Section 3 applies to all Public and Indian Housing capital, operating or development funds; therefore, new hiring done by the PHA (regardless of the position) is covered by Section 3.

28. For community development and other housing assistance, do the thresholds apply to the total amount of HUD assistance received or the amount of funds invested into Section 3 covered projects/activities?

    The threshold applies to the total amount of HUD assistance received. Example: the City of Mountain View, receives $210,000 through the State CDBG program. The funds will be used as follows:

    a. Housing rehabilitation- $180,000;
    b. micro-enterprise revolving loan fund- $20,000; and
    c. Fair housing counseling- $10,000.

    City of Mountain View is subject to Section 3 requirements because they received over $200,000 in housing and community development funds. However, only the funds expended for Section 3 covered activities must comply with the requirements of Section 3. Therefore, the expenditure of the $180,000 is covered by Section 3. The remaining $30,000 that was used for fair housing counseling and a revolving loan fund is not covered by Section 3.

29. Are contracts cumulative for reaching the Section 3 threshold?

    No. Contracts for Section 3 covered projects are <u>not</u> cumulative. The requirements of Section 3 apply to each individual contract that meets the thresholds.

    For example, if a recipient agency awards 3 housing rehabilitation contracts (at $36,000; $50,000; and $20,000 for a cumulative total of $106,000) to one contractor for three different projects within a twelve month period, the contractor is not required to comply with the requirements of Section 3 because none of his contracts met the $100,000 threshold. Accordingly, the responsibility for meeting the requirements of Section 3 would remain with the recipient agency that awarded the contracts.

CONSISTENCY WITH OTHER LAWS

30. Does Section 3 apply to other State/local laws?

    Yes. Compliance with Section 3 shall be achieved, to the greatest extent feasible, consistent with local laws and regulations. Accordingly, recipients of Section 3 covered assistance are required to develop strategies for meeting both the regulatory requirements at 24 CFR Part 135 and any other applicable statutes or regulations.

31. What is the relationship between Section 3 and Davis Bacon requirements?

    Compliance with Section 3 must be achieved consistent with the requirements of Davis-Bacon. Certain construction contracts are subject to compliance with the requirement to pay prevailing wages determined under Davis-Bacon Act (40 U.S.C. 276a—276a–7) and implementing U.S. Department of Labor regulations in 29 CFR part 5. Additionally, certain HUD-assisted rehabilitation and maintenance activities on public and Indian housing developments are subject to compliance with the requirement to pay prevailing wage rates, as determined or adopted by HUD, to laborers and mechanics employed in this work.

32. What is the relationship between Section 3 and Minority Business Enterprises (MBEs)?

    'Minority business enterprise' (MBE) means a business enterprise that is owned and controlled by one or more minority or socially and economically disadvantaged persons. Such disadvantage may arise from cultural, racial, chronic economic circumstances or other similar causes.

    Section 3 preferences are race and gender neutral. A minority and/or woman owned business enterprise must provide evidence that it meets at least one criterion of a Section 3 business outlined above in order to receive preference under Section 3. However, the Department anticipates that Section 3 will serve to support, and not impede, contract opportunities for minority business enterprises.

    The MBE designation may provide preferences promoted by other statutes and regulations, such as goals for MBEs, and other socially and economically disadvantaged businesses. Additional information about the MBE program can be obtained by calling the HUD Office of Small and Disadvantaged Business Utilization at 202-708-1428.

RECIPIENT RESPONSIBILITIES

33. What are the responsibilities of recipient agencies under Section 3?

Recipients are required to ensure their own compliance and the compliance of their contractors/subcontractors with the Section 3 regulations, as outlined at 24 CFR § 135.32. These responsibilities include but may not be necessarily limited to the following.

- Designing and implementing procedures to comply with the requirements of Section 3 in order to comply with Section 3: Recipient agencies must take an ***active role*** in ensuring Section 3 compliance. The first step is designing or planning and implementing procedures to ensure that all parties, including residents, businesses, contractors, and subcontractors, comply with Section 3.

- Facilitating the training and employment of Section 3 residents: The recipient agency must act as a facilitator, connecting Section 3 residents to training and employment opportunities.

- Facilitating the award of contracts to Section 3 business concerns: The recipient agency must also work to link developers and contractors with capable Section 3 business concerns. Additionally, recipient agencies, when necessary, may direct Section 3 business concerns to organizations that provide capacity building training.

- Ensuring Contractor and Subcontractor Awareness of Section 3 Goals and Responsibilities: The recipient agency is responsible for ensuring that contractors and subcontractors are aware of, and in compliance with, Section 3 requirements.

- Ensuring Compliance and Meeting Numerical Goals: Recipient agencies shall ensure compliance with Section 3 by assessing the hiring and subcontracting needs of contractors; regularly monitoring contractor compliance; assisting and actively cooperating with the Secretary of HUD in obtaining the compliance of contractors; Penalizing non-compliance; Providing incentives for good performance; and Refraining from entering into contracts with any contractor that previously failed to comply with the requirements of Section 3.

- Reporting Requirements: Recipient agencies must document all actions taken to comply with the requirements of Section 3: Recipient agencies must submit a Section 3 Annual Summary Report (Form HUD-60002) for all covered

funding to the Office of Fair Housing and Equal Opportunity. Section 3 reports shall be submitted electronically online at: www.hud.gov/section3.

34. What are good strategies for targeting Section 3 residents and businesses?

    In order to target Section 3 residents and businesses, recipients must establish and maintain an effective Section 3 program. HUD has found that hiring a Section 3 coordinator or assigning one individual the responsibility of coordinating all Section 3 related activities to be instrumental for reaching the employment and contracting goals.
    It is recommended that recipient agencies establish procedures to certify Section 3 residents and Section 3 business concerns and incorporate some form of preference for employment and contracting opportunities. Thereafter, they should maintain a list of eligible residents and businesses by skill, capacity or interest and contact them on a periodic basis when employment and contracting opportunities are available. Refer to the Section 3 Regulations at 24 CFR Part 135.32 for a listing of responsibilities and the Appendix to the Section 3 regulations for additional examples of effective strategies.

35. Are funds provided to recipients so that they can comply with the requirements of Section 3?

    No. Since Section 3 requirements are only triggered when the normal expenditure of covered funds results in employment, training, or contracting opportunities, there is no need for the Department to provide funds to meet the recipient responsibilities set forth in the regulation.

36. Does Section 3 require recipient agencies to create new (or unnecessary) training, employment, and contracting opportunities?

    Recipient agencies are not required to create jobs or contracts for Section 3 residents and business concerns simply for the sake of creating them. Section 3 requires that ***when*** employment or contracting opportunities are generated because a project or activity undertaken by a recipient of covered HUD financial assistance necessitates the employment of additional personnel through individual hiring or the awarding of contracts, the recipient must give preference in hiring to low- and very low- income persons and/or businesses that are owned by these persons or that substantially employ them.

37. Are Section 3 residents or business concerns guaranteed employment or contracting opportunities under Section 3?

    Section 3 is not an entitlement program, there are no guarantees. Residents and businesses must be able to demonstrate that they have the ability or capacity to perform the specific job or successfully complete the contract that they are seeking.

Section 3 requirements provide preference to Section 3 residents and business concerns, but not a guarantee.

38. Are recipients, developers, and contractors required to provide long- term employment opportunities, and not simply seasonal or temporary employment?

    Recipients, developers, and contractors are required, to the extent feasible, to direct all employment opportunities to low- and very low-income persons- including seasonal and temporary employment opportunities. Employment goals are based on 'new hires,' which are defined as full-time employees for permanent, temporary or seasonal employment opportunities.

    Recipients, developers, and contractors are encouraged to provide long-term employment.

39. When might a recipient agency be exempt from the requirements of Section 3?

    Typically, the Department does not grant any exemptions or waivers related to Section 3.

40. Are recipients required to request developers or contractors to make payments into Section 3 training or implementation funds?

    No. Recipients are not required to request noncompliant contractors make payments into a fund.

    Providing employment, training, and subcontracting opportunities to Section 3 residents and businesses must be the primary goal of developers/contractors. However, such a fund can be used in very specific instances as a penalty for noncompliance.

SECTION 3 PREFERENCE

41. How can a prospective Section 3 resident or business certify that they meet the eligibility requirements?

    The individual or business must contact the agency or developer that they are seeking employment or contracting opportunities from (i.e., the PHA, city, or local government). They should identify themselves as a Section 3 resident or business and provide whatever documentation that the recipient agency requires under their certification procedures.

42. Who is responsible for certifying that residents and businesses meet the regulatory definitions under Section 3?

The regulation allows recipient agencies to use their discretion for developing specific procedures to meet the requirements of Section 3. This includes establishing their own standards/processes for verifying eligibility of Section 3 residents and businesses (or not). Each recipient is also free to accept or reject the standards/process used by other recipients or pay for the services of a third party vendor to determine eligibility. While HUD does not endorse the services of private, third party vendors, recipient agencies may employ such services at their discretion.

43. What are examples of acceptable evidence to determine eligibility as a Section 3 resident?

    HUD does not prescribe that any specific forms of evidence to establish Section 3 eligibility. Sample certification documents can be found on the Section 3 website. Acceptable documentation includes, but is not limited to the following:

    - Proof of residency in a public housing development;
    - Evidence of participation in a HUD Youth build program operated in the metropolitan area (or non-metropolitan county) where the Section 3 covered assistance is spent;
    - Evidence that the individual resides in the Section 3 area and is a low or very low-income person, as determined by local HUD income limits;

44. What are examples of acceptable evidence for determining eligibility as a Section 3 business?

    HUD does not prescribe that any specific forms of evidence be required to establish Section 3 eligibility. Sample certification documents can be found on the Section 3 website. The business seeking the preference must be able to demonstrate that they meet one of the following criteria:

    - 51 percent or more owned by Section 3 residents; or
    - Has permanent, full time employees at least 30 percent of whom are currently Section 3 residents, or within three years of the date of first employment with the business concern were Section 3 residents; or
    - Has a commitment to sub-contract in excess of 25 percent of the total dollar award of all sub-contracts to be awarded to such businesses described above.

45. Are all public and Indian housing residents considered Section 3 residents regardless of their income?

    Yes. Public and Indian housing residents need only show proof of residency in public housing within the metropolitan area (or non-metropolitan county). Other residents of the Section 3 area may need to show proof of residency in the metropolitan area (or non-metropolitan county) and meet the HUD income requirements.

46. Can recipient agencies allow residents or businesses to “self-certify” that they meet the Section 3 eligibility requirements?

    As previously mentioned, the regulation allows recipient agencies to use their own discretion to develop specific procedures for meeting the requirements of Section 3. Many recipient agencies choose to allow prospective Section 3 residents or businesses to self-certify their eligibility. The Department recommends that any self-certification should include a statement of penalty for falsifying information.

47. Are Section 3 business concerns only certified to receive preference in the community in which they are located?

    No. While certification is locality specific, recipient agencies can count a Section3 business that is located outside of its immediate jurisdiction towards their efforts to meet the minimum numerical goals. However, recipient agencies should not provide preference to a Section 3 that is not located in their jurisdiction if a local Section 3 business has also submitted a qualified bid for a contract and can complete the work to be done. Refer to the order of priority preference for Section 3 contract opportunities at 24 CFR Part 135.36.

48. Does preference to a Section 3 business mean that the business should be selected if it meets the technical requirements of the bid, regardless of bid price?

    No. As provided in 24 CFR 85.36(b) (8), contract awards shall only be made to responsible contractors possessing the ability to perform under the terms and conditions of the proposed contract. In order to meet the requirements of Section 3 and Federal Procurement laws, recipient agencies must develop procedures that are consistent with all applicable regulations.

49. Can contracting with MBE/WBE businesses count towards Section 3 contracting goals?

    Section 3 is race and gender neutral. Only MBEs/WBEs that meet the eligibility criteria set forth in the regulation can they be counted towards the minimum goals for Section 3 contracting opportunities.

50. Does a business have to be incorporated to be considered a Section 3 eligible business?

    A Section 3 business concern can be any type of business, such as a sole proprietorship, partnership or a corporation, properly licensed and meeting all legal requirements to perform the contract under consideration.

ECONOMIC OPPORTUNITIES/NUMERICALGOALS

51. How can residents and businesses locate recipient agencies that are required to comply with Section 3 in their area?

    To find local recipients agencies, Section 3 residents or businesses should contact their local HUD office. To find your closest office, visit: www.hud.gov/localoffices

52. How can I find Section 3 businesses in my area?
    Contact local recipient agencies to find Section 3 business concerns in your area.

53. What types of new employment opportunities are covered by Section 3?

    For public and Indian housing (PIH) programs, all employment opportunities generated by the expenditure of operating, capital, and modernization assistance, including management and administrative jobs, technical, professional, construction and maintenance jobs, at all levels.

    For housing and community development programs, all employment opportunities arising in connection with housing rehabilitation (including reduction and abatement of lead-based paint hazards); housing construction; or other public construction, including management and administrative jobs, technical, professional, building trades and non-construction jobs, at all levels.

54. Are recipient agencies required to meet the Section 3 goals, or are they optional?

    The Section 3 numerical goals are minimum targets that must be reached in order for the Department to consider a recipient in compliance. Recipient agencies are required to make best efforts to the greatest extent feasible, to achieve the annual numerical goals for employment and contracting. If an agency fails to fully meet the Section 3 numerical goals, they must adequately document the efforts taken to meet the numerical goals (see Question #2 for a discussion of “to the greatest extent feasible”).

55. What are the Section 3 minimum numerical goals?

    The minimum numerical goal for employment is thirty (30) percent of the aggregate number of new hires shall be Section 3 residents, annually- i.e., 3 out of 10 new employees needed to complete a Section 3 covered project/activity shall be Section 3 residents.

    The minimum goals for contracting are:
    - Ten (10) percent of the total dollar amount of all Section 3 covered contracts for building trades work for maintenance, repair, modernization or development of public or Indian housing or building trades work arising in connection with

housing rehabilitation, housing construction and other public construction, shall be awarded to Section 3 businesses; and

- Three (3) percent of the total dollar amount of all non-construction Section 3 covered contracts shall be awarded to Section 3 businesses

56. What is considered a Section 3 covered “non-construction” project?

    Section 3 covered non-construction projects include maintenance contracts, including lawn care, re-painting, routine maintenance, HVAC servicing, and professional service contracts associated with construction (ex.: architectural, engineering, legal services, accounting, marketing, etc.).

57. What is considered "other" public construction?

    Other public construction includes infrastructure work, such as extending water and sewage lines, sidewalk repairs, site preparation, installing conduits for utility services, etc.

58. Are the numerical goals the same as set-asides and quotas?

    No. A set-aside guarantees that a specific portion of funds will be provided to a protected class. Section 3 goals are minimum numerical targets that a recipient of HUD Section 3 covered financial assistance must try to reach to attain compliance with Section 3.

59. What is the meaning of the “safe harbor” determination?

    When a recipient agency or contractor meets the numerical goals, the recipient or contractor is considered to be in compliance with Section 3, absent evidence to the contrary (i.e., evidence or findings obtained from a Section 3 compliance review).

60. What should recipient agencies or contractors do if they fail to meet the minimum numerical goals set forth in the regulation?

    Recipient agencies and their contractors must adequately document all efforts taken to comply with the requirements of Section 3, and explain why despite their efforts “to the greatest extent feasible”; the minimum numerical goals were not met.

    The Department will take each agency’s explanation into consideration when making compliance determinations.

RECORDKEEPING AND REPORTING

61. What are the recordkeeping requirements of Section 3 recipient agencies?

    Documentation of actions taken to comply with the employment, training and contracting requirements of Section 3, the results of actions taken and impediments encountered. Recipient agencies should maintain records of job vacancies, solicitation for bids or proposals, selection materials, and contract documents (including scope of work and contract amount), in accordance with Federal or State procurement laws and regulations. The documentation should demonstrate efforts taken towards the achievement of the Section 3 numerical goals.

62. Who is required to submit Section 3 reports?

    Each direct recipient of Section 3 covered HUD financial assistance shall submit an annual report for the purpose of determining the effectiveness of Section 3. Section 3 summary reports, form HUD 60002, are required even if the recipient agency did not undertake any activities that triggered the requirements. Subrecipients, developers, and contractors should not submit Section 3 annual reports directly to the Department.

63. Where should Section 3 summary reports (Form HUD 60002) be submitted?

    The Department has developed an online reporting system to allow grantees to submit Section 3 reports (form HUD 60002) directly to FHEO. Reports should be submitted online at: www.hud.gov/section3 from the Section 3 website.

64. After an agency submits its Section 3 report online, should a hard copy of the form also be submitted to HUD by fax, email, or mail?

    No. Since the Department has an online reporting system, it s not necessary for agencies to submit hard copies (or paper copies) of reports to FHEO. The Department is making an effort to go “paperless” and wants to reduce paper submissions of Section 3 reports.

    However, it is recommended that grantees retain a copy of their completed Section 3 reports on file and optionally submit them as an attachment to their annual performance report if applicable (CAPERS report for CDBG, HOME and ESG Programs).

65. Are contractors or developers required to submit Section 3 reports directly to HUD?

    No. Contractors and/or developers should not submit Section 3 reports to HUD. Only direct recipients (agencies) are required to submit Section 3 reports to HUD. Contractors should maintain adequate documentation to demonstrate compliance

with Section 3 and forward information to the direct recipient (i.e., the agency that awarded them a covered contract) as directed or upon request.

66. Should recipient agencies establish a reporting system for their contractors and subcontractors?

    Yes, reports complied by contractors and subcontractors will assist the recipient agency in gathering the necessary data for submission to HUD.

67. When are Section 3 annual reports (Form HUD 60002) due?

    Depending on the source of funding, annual reports should be submitted at one of three times:
    1) At the time the recipient submits an annual performance report;
    2) By January 10 of each year if no program annual performance report is required; or
    3) Within ten (10) days of project completion, whichever is earlier.

    - PHAs should submit form HUD60002 by January 10th.
    - Grantees Awarded funding for Section 202/811 should submit form HUD 60002 by January 10th.
    - Grantees Awarded funding for CDBG, HOME and/or ESG should submit form HUD 60002 at the same time they submit the CAPER report.
    - Grantees Awarded funding for lead abatement activities should submit form HUD 60002 with their annual reports no later than September 30th.

68. Where can I find instructions for completing form HUD 60002?

    Instructions for completing form HUD 60002 can be found on the Section 3 website at www.hud.gov/section3. Additional technical assistance for completing form HUD 60002 can be obtained by submitting an email request to: section3@hud.gov.

69. How can a recipient agency request a copy, make corrections, or delete its own Section 3 annual report?

    The recipient agency should submit an email request to section3@hud.gov. Requests should contain the agency's name along with the year, grant number, and dollar amount of the report in question.

70. How can I obtain copies of 60002 reports for another local recipient agency?

Copies of 60002 reports for local recipient agencies for which you are not affiliated with can be obtained by completing and submitting a Freedom of Information Act (FOIA) request at: http://www.hud.gov/offices/ogc/foia/foiarequests.cfm.

71. Are agencies required to submit Form HUD 2516 to demonstrate compliance with Section 3?

    No. Agencies are not required to submit Form HUD 2516 to demonstrate compliance with Section 3. In addition, while Form HUD 2516 does capture some Section 3 data, it is not sufficient to demonstrate overall compliance to the Department. The only form that should be submitted for Section 3 reporting requirements is form HUD 60002.

SECTION 3 COMPLAINTS

72. Who can file a complaint that alleges non-compliance with the requirements of Section 3?

    Any Section 3 resident or Section 3 business (or authorized representative) seeking employment, training, or contracting opportunities generated by Section 3 covered assistance may file a complaint using form HUD 958.

73. Where should Section 3 complaints be submitted?

    Effective November 2007, Section 3 complaints must be filed at the appropriate FHEO Regional Office where the violation occurred. Please visit www.hud.gov/offices/fheo to obtain the address and telephone number for FHEO regional offices.

74. Where can I find form HUD 958?

    Copies of the Section 3 complaint form (HUD 958), filing instructions and mailing addresses may be obtained at: www.hud.gov/section3.

75. Is there a time limit for filing a Section 3 complaint?

    Yes. Section 3 complaints must be filed no later than 180 days from the date of the action or omission upon which the complaint is based.

76. What happens during an investigation?

    Once a timely complaint has been filed with the appropriate Regional Office, the Department will determine if the compliant has jurisdiction or is covered by Section 3 regulations. An investigator will be assigned the case and will notify the respondent about the complaint. The respondent has the option of resolving the complaint or

contesting it. If the respondent contests or denies the allegations of noncompliance contained in the complaint, the investigator will proceed to gather facts or evidence from both parties. Thereafter, the investigator will prepare a letter of findings and either make a determination of noncompliance or dismiss the complaint.

77. What happens if HUD determines a recipient is in noncompliance?

Pursuant to 24 CFR 135.76, the Assistant Secretary will attempt, through informal methods, to obtain a voluntary and just resolution of the complaint. Where attempts to resolve the complaint informally fail, the Assistant Secretary will impose a resolution on the recipient and complainant. Any resolution imposed by the Assistant Secretary will be in accordance with requirements and procedures concerning the imposition of sanctions or resolutions as set forth in the regulations governing the HUD program under which the Section 3 covered assistance is provided.

78. Can complainants appeal the initial decision made in a Section 3 complaint?

A complainant can submit a written appeal to the Assistant Secretary for Fair Housing and Equal Opportunity in Washington, DC within 15 days after the Regional Office makes its determination. Requests should be sent to:

U.S. Department of Housing and Urban Development
Office of Fair Housing and Equal Opportunity
451 Seventh Street, SW
Room 5100
Washington, DC 20410

79. Where else can I file complaints alleging denied employment and contracting opportunities?

If you are denied employment and/or contracting opportunities, you *may* have standing to bring a complaint at HUD under Title VI of the Civil Rights Act and/or Section 109 of the Housing and Community Development Act of 1974.

You may also be eligible to bring complaints under other federal laws. The U.S. Equal Employment Opportunity Commission (EEOC) is responsible for enforcing federal laws that make it illegal to discriminate against a job applicant or an employee because of the person's race, color, religion, sex (including pregnancy), national origin, age (40 or older), disability or genetic information (medical history or predisposition to disease). For more information about your rights, please contact EEOC at: www.EEOC.gov.

The Department of Labor Office of Federal Contract Compliance Programs (OFCCP) enforces, for the benefit of job seekers and wage earners, the contractual promise of affirmative action and equal employment opportunity required of those who do business with the Federal government. More information about the services they provide can be obtained at: http://www.dol.gov/ofccp/

RIHPHC Section 106 - Project Approval

STATE OF RHODE ISLAND AND PROVIDENCE PLANTATIONS
HISTORICAL PRESERVATION & HERITAGE COMMISSION
Old State House • 150 Benefit Street • Providence, R.I. 02903-1209
TEL (401) 222-2678 FAX (401) 222-2968
TTY (401) 222-3700 Website www.preservation.ri.gov

24 November 2014

Andrew Silvia
Chief of Project Development
City of Pawtucket Department of Public Works
250 Armistice Boulevard
Pawtucket, Rhode Island 02860

Re: Main Street Bridge Sidewalk Relocation
Pawtucket, Rhode Island

Dear Mr. Silvia:

The Rhode Island Historical Preservation and Heritage Commission (RIHPHC) staff has reviewed the design plans and specifications that you submitted for the Main Street Bridge Sidewalk Relocation project. The 90% plans are dated October 31, 2014. Due to structural deficiencies, the City of Pawtucket is proposing to remove the existing sidewalk on the north (upstream) side of the Main Street Bridge, and to utilize a portion of the northernmost travel lane over the bridge to construct a new sidewalk.

The RIHPHC and your office have corresponded previously about numerous details of the project, including railings, concrete color, and utility location. The results of this correspondence appear to be reflected in the plans. The one concern that we still have about the project is the color of the edge of the new concrete sidewalk, where it will be visible above the stone wall of the historic bridge. We would like to continue to consult on this element on the bridge, with the possibility of having a colored surface stain applied to the new concrete if the difference between the stone and concrete colors is visually jarring.

Based on our review of the plans that you submitted, it is our conclusion that, provided that the consultation regarding the color of the concrete above the stone wall of the bridge continues, the project will have no adverse effect on historic resources.

These comments are provided in accordance with the *Procedures for the Registration and Protection of Historic Properties of the Rhode Island Historical Preservation Commission* and with Section 106 of the National Historic Preservation Act. If you have any questions, please contact Jeffrey Emidy, Project Review Coordinator of this office.

Very truly yours,

FOR Edward F. Sanderson, Executive Director
Deputy State Historic Preservation Officer

C: Susan Mara, Pawtucket Planning Department, by email

140425.04jde

RIDOT 2014 Main Street Bridge Inspection Report

RHODE ISLAND DEPARTMENT OF TRANSPORTATION
BRIDGE ENGINEERING-BRIDGE INSPECTION UNIT

BRIDGE LOAD RATING & POSTING RECOMMENDATION
(Form BI-005)

Bridge Information

Bridge No.	096621
Bridge Name:	Main Street Stringer Span
Route Carried:	RI 15 (Main Street)
Crossing:	Blackstone River
City/Town:	Pawtucket
Inspection Date:	09/04/14
Date Notified:	09/15/14
Notified By:	Michael Baker Jr., Inc.

General Recommendation

- ☒ Recommend verification/revision of existing load rating based on current condition (i.e. condition changed affecting structural capacity).
- ☐ Load posting sign(s) missing at bridge.
- ☐ Advanced load posting sign(s) missing from approaches.
- ☐ Load posting sign(s) damaged. Replace sign.
- ☐ Recommend verification of existing posting sign with current load rating.

Notes:

1. This form shall be submitted electronically to the appropriate personnel in accordance with the latest Distribution & Contact List.

Remarks:

There are areas of increased section loss at critical locations. The maximum bottom flange loss is 10.9% at girder C at mid-span (no previous section loss calculations provided). The maximum web bearing column loss is 47.0% at girder A at the east abutment (no significant increase in deterioration, no previous section loss calculations provided).

Please see attached sketches and photos. Isolated

Baker

SUPPLEMENTAL SHEET	BRIDGE NO. 096621	DATE: 9/4/14
☐ FIELD ORIGINAL ☐ TRANSCRIBED BY: BMT	CREW: JAC & BMT	SHEET 1 of 8

DESCRIPTION:

ORIGINAL BOTTOM FLANGE SECTION = 20" wide × 2" thick = 40 in²

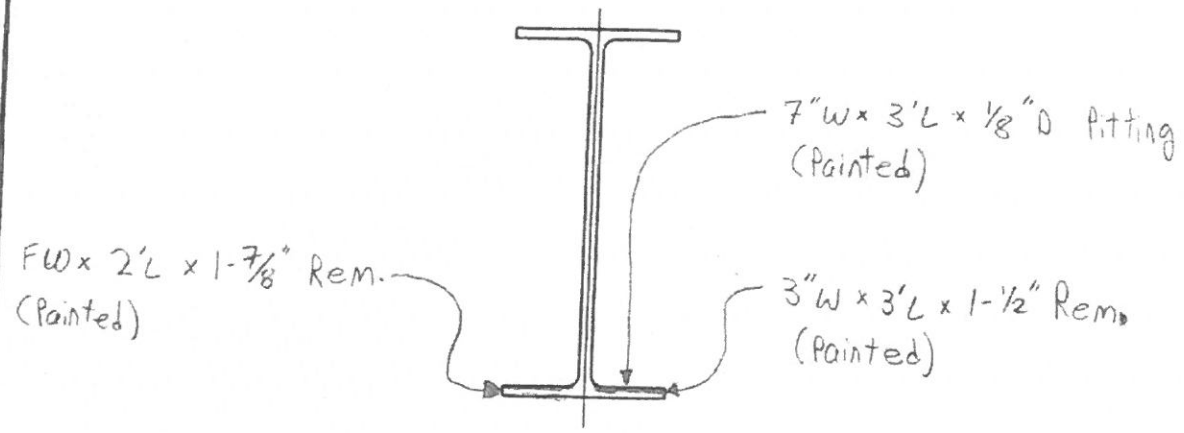

Girder B, 44'-6" F/East Abutment
Looking West

SECTION LOSS = 10" · 1/8" + 3" · 1/2" + 7" · 1/8" · 1/2 = 3.19 in²

BOTTOM FLANGE % LOSS = $\frac{3.19 \text{ in}^2}{40 \text{ in}^2} \cdot 100\% =$ 8.0 % Section Loss

By = BMT

CHECKED = JAC

UPDATE NO.	DATE	COMPANY	CREW
△			
△			
△			
△			

Baker

SUPPLEMENTAL SHEET

☐ FIELD ORIGINAL ☐ TRANSCRIBED BY: BMT

BRIDGE NO. 096621	DATE: 9/4/14
CREW: JAC & BMT	SHEET 2 of 8

DESCRIPTION:

ORIGINAL BOTTOM FLANGE SECTION = 20" wide × 2" thick = 40 in²

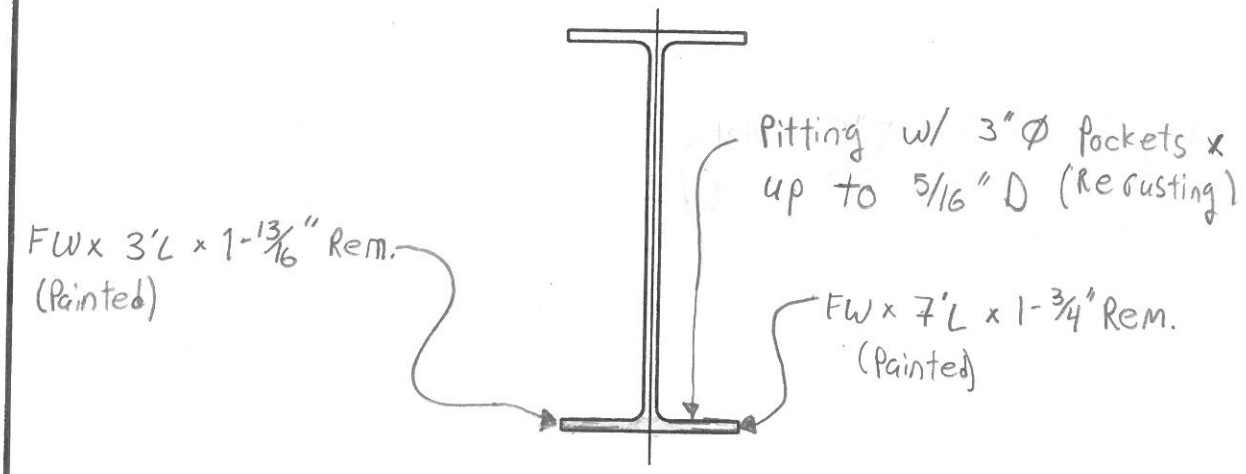

Girder C, Mid-span
Looking West

SECTION LOSS = 1/4" • 10" + 3/16" • 10" = 4.375 in²

BOTTOM FLANGE % LOSS = $\frac{4.375 \text{ in}^2}{40 \text{ in}^2}$ • 100% = 10.9 % Section Loss

By = BMT

CHECKED = JAC

UPDATE NO.	DATE	COMPANY	CREW
△			
△			
△			
△			

Baker

SUPPLEMENTAL SHEET

☐ FIELD ORIGINAL ☐ TRANSCRIBED BY: BMT

BRIDGE NO. 096621	DATE: 9/4/14
CREW: JAC & BMT	SHEET 3 of 8

DESCRIPTION:

ORIGINAL BOTTOM FLANGE SECTION = 20" wide × 2" thick = 40 in^2

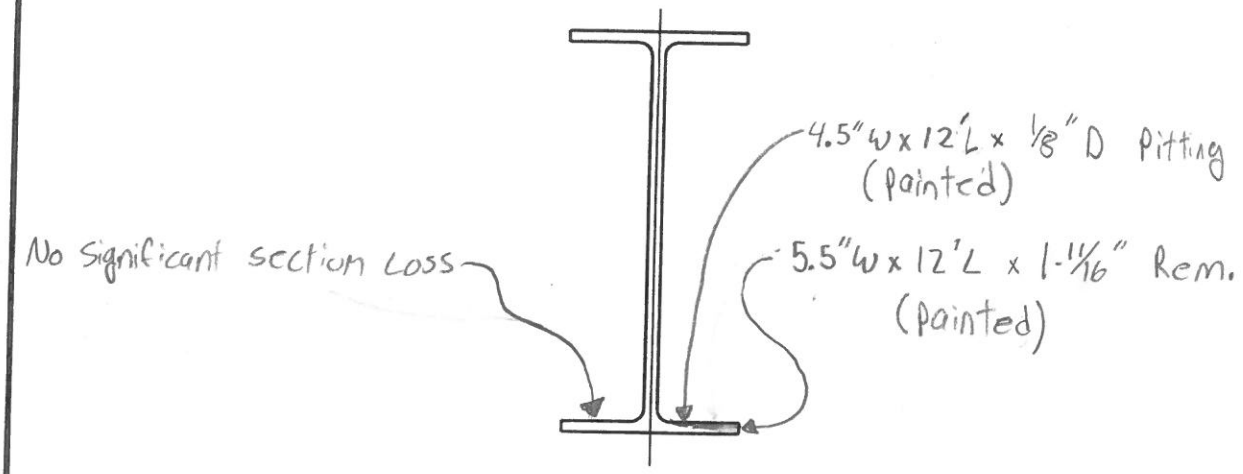

Girder E, 40' F/ EAST Abutment
Looking West

SECTION LOSS = 5.5" • 5/16" + 4.5" • 1/8" • (1/2) = 2.0 in^2

BOTTOM FLANGE % LOSS = $\frac{2.0\ in^2}{40\ in^2}$ • 100% = 5.0% Section Loss

By = BMT

CHECKED = JAC

UPDATE NO.	DATE	COMPANY	CREW
△			
△			
△			
△			

Baker

SUPPLEMENTAL SHEET

☐ FIELD ORIGINAL ☐ TRANSCRIBED BY: BMT

BRIDGE NO. 096621	DATE: 9/4/14
CREW: JAC & BMT	SHEET 4 of 8

DESCRIPTION:

ORIGINAL BOTTOM FLANGE SECTION = 20" wide × 2" thick = 40 in²

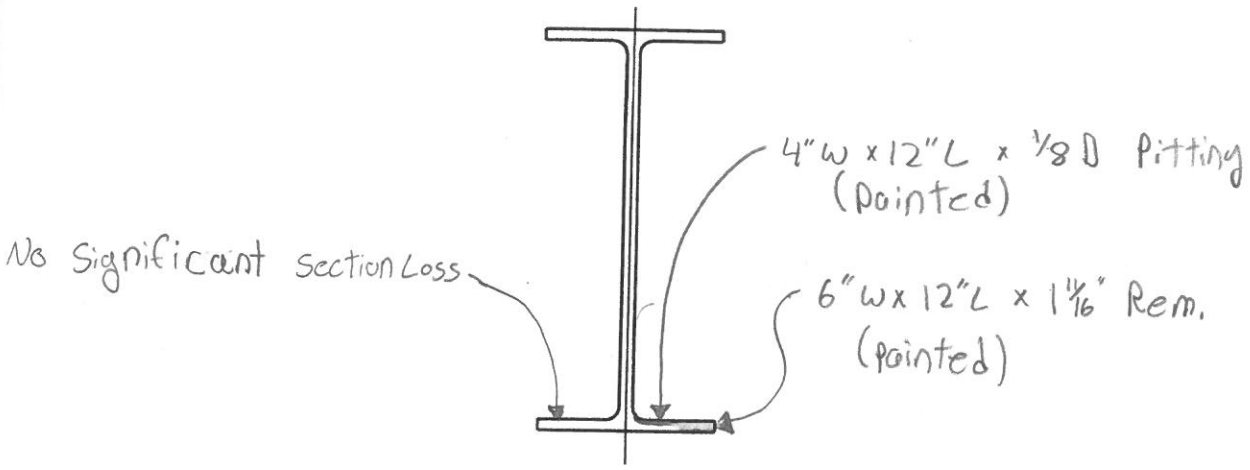

Girder F, 45' F/ East Abutment
Looking west

SECTION LOSS = 6" · 5/16" + 4" · 1/8" · (1/2) = 2.13 in²

BOTTOM FLANGE % LOSS = $\frac{2.13 \text{ in}^2}{40 \text{ in}^2} \cdot 100\% =$ 5.3 % Section Loss

By = BMT
CHECKED = JAC

UPDATE NO.	DATE	COMPANY	CREW
△			
△			
△			
△			

Baker

SUPPLEMENTAL SHEET

☐ FIELD ORIGINAL ☐ TRANSCRIBED BY: BMT

BRIDGE NO. 096621 | DATE: 9/4/14

CREW: JAC & BMT | SHEET 5 of 8

DESCRIPTION:

ORIGINAL BOTTOM FLANGE SECTION = 20" wide × 2" thick = 40 in²

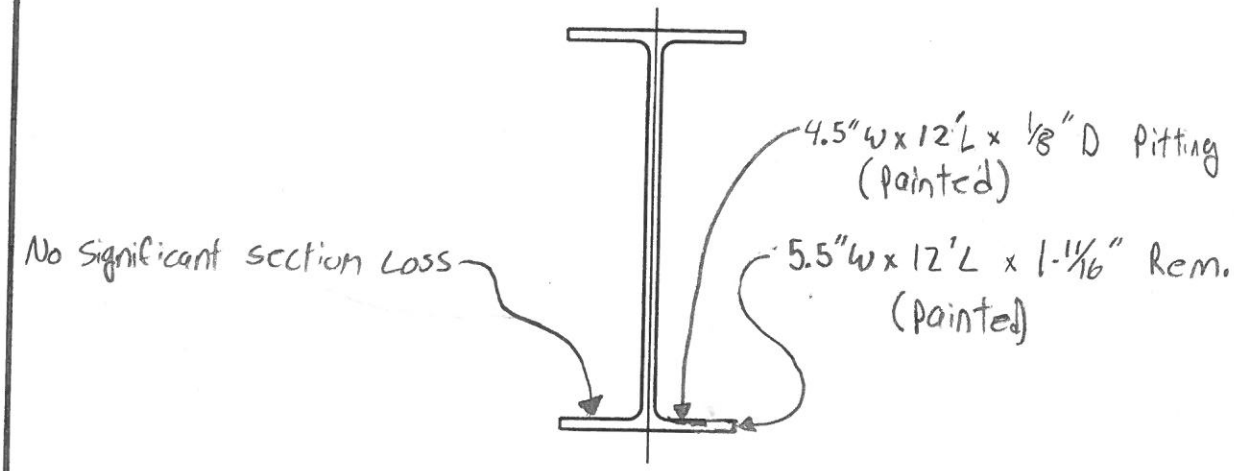

Girder G, 45' F/East Abutment
Looking West

SECTION LOSS = 5.5" • 5/16" + 4.5" • 1/8" • (1/2) = 2.0 in²

BOTTOM FLANGE % LOSS = $\frac{2.0 \text{ in}^2}{40 \text{ in}^2}$ • 100% = 5.0% Section Loss

By = BMT

CHECKED = JAC

UPDATE NO.	DATE	COMPANY	CREW
△			
△			
△			
△			

Baker

SUPPLEMENTAL SHEET

☐ FIELD ORIGINAL ☐ TRANSCRIBED BY: BMT

BRIDGE NO. 096621	DATE: 9/4/14
CREW: JAC & BMT	SHEET 6 of 8

DESCRIPTION:

ORIGINAL BOTTOM FLANGE SECTION = 20" wide × 2" thick = 40 in²

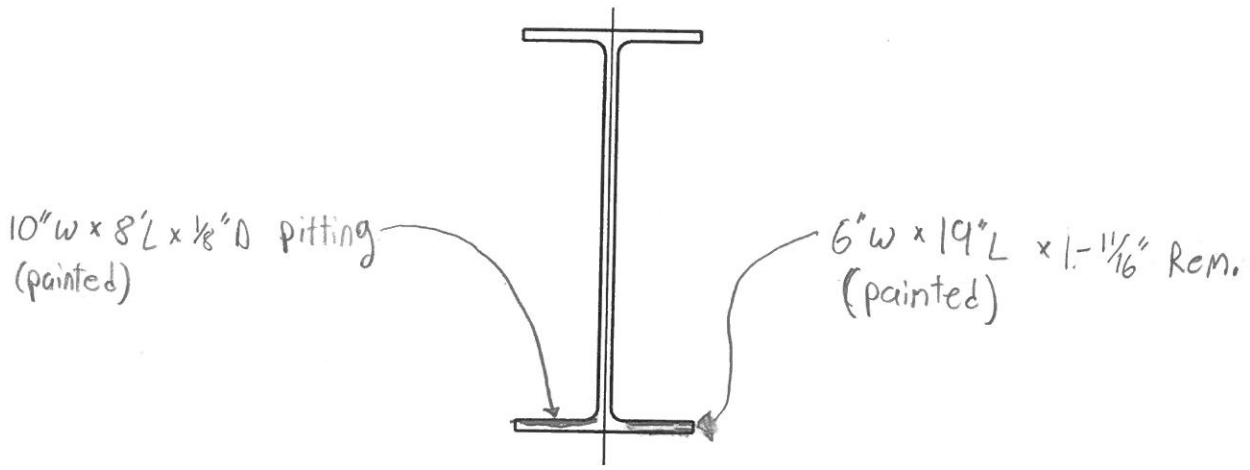

Girder H, Mid-Span
Looking West

SECTION LOSS = 10" • 1/8" • (1/2) + 6" • 5/16" = 2.5 in²

BOTTOM FLANGE % LOSS = $\frac{2.5 \text{ in}^2}{40 \text{ in}^2}$ • 100% = 6.3 % SECTION LOSS

By = BMT
CHECKED = JAC

UPDATE NO.	DATE	COMPANY	CREW
△			
△			
△			
△			

Baker

SUPPLEMENTAL SHEET	BRIDGE NO. 096621	DATE: 9/4/14
☐ FIELD ORIGINAL ☐ TRANSCRIBED BY: BMT	CREW: JAC & BMT	SHEET 7 of 8

DESCRIPTION:

ORIGINAL Bottom Flange Section = 20"W x 2" Thick

Original area = 40 in²

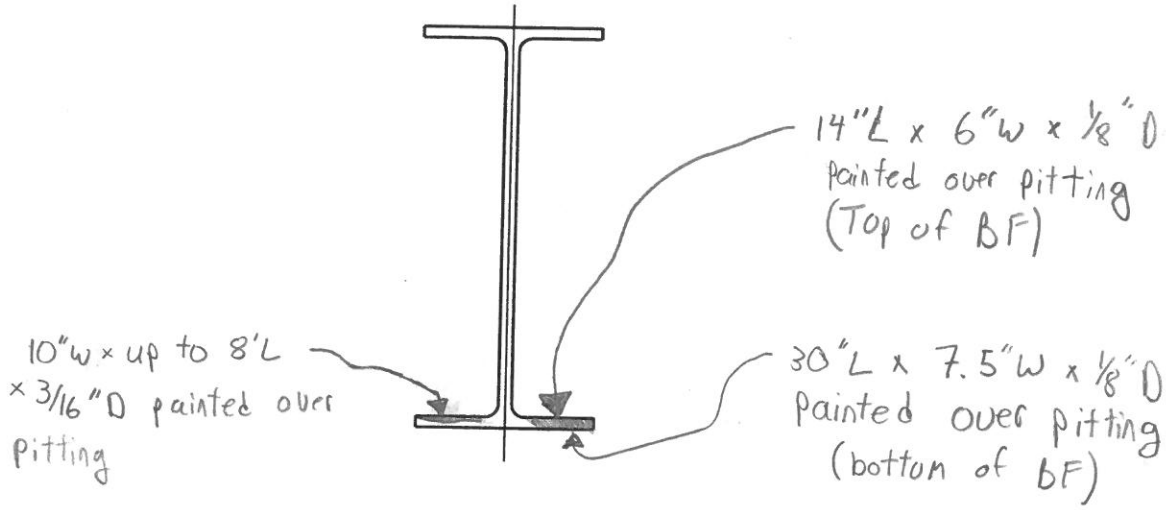

Girder H, 6' East of Mid-span
Looking WEST

Section Loss = $10'' \cdot \frac{3}{16}'' \cdot (1/2) + 6'' \cdot 1/8'' \cdot (1/2) + 7.5'' \cdot 1/8'' \cdot (1/2) = 1.78 \text{ in}^2$

Bottom Flange % Loss = $\frac{1.78 \text{ in}^2}{40 \text{ in}^2} \cdot 100\% =$ < 5.0% Section Loss

By = BMT

CHECKED = JAC

UPDATE NO.	DATE	COMPANY	CREW
△			
△			
△			
△			

Baker

SUPPLEMENTAL SHEET

☑ FIELD ORIGINAL ☐ TRANSCRIBED BY:_____

BRIDGE NO. 096621	DATE: 09/04/14
CREW: JAC & BMT	SHEET 8 of 8

By = BMT

CHECKED = JAC

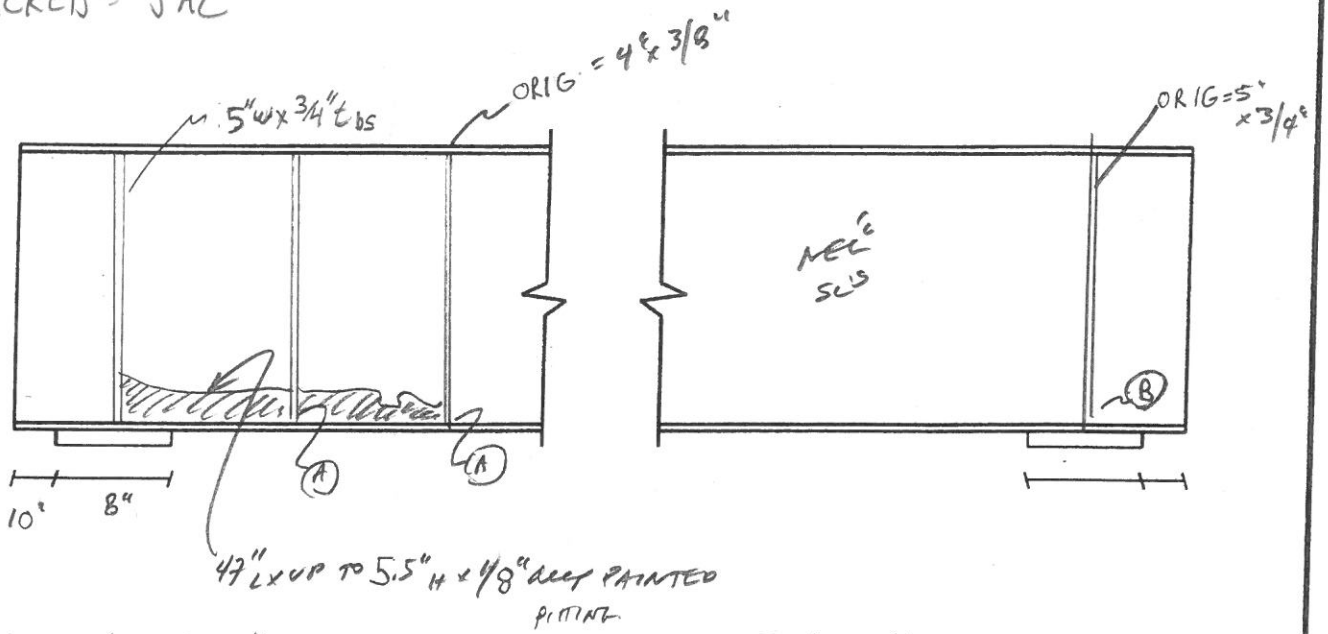

Girder H, North Elev @ East Abut

Girder H, South Elev. @ East Abut.

(A) FW x 3" H RTH @ BASE OF STIFF.

(B) FW x 3" H x 1/2" Rem (Painted over)

Original Shear: $D = 53\frac{3}{4}''$ $t_w = \frac{3}{8}''$ (*feild measured) $\rightarrow D \cdot t_w = \underline{20.15 in^2}$

Original Bearing Area: $A_{bs} = (2) \cdot \frac{3}{4}'' \cdot 5'' = 7.5 in^2$

$t_w = \frac{3}{8}''$, $t_{bs} = \frac{3}{4}''$, $9 \cdot t_w = 3.38''$

$(2 \cdot 9 \cdot t_w + t_{BS}) \cdot t_w + A_{bs} = \underline{10.31 in^2}$

Shear Loss $= 5.5'' \cdot \frac{1}{8}'' \cdot (\frac{1}{2}) = 0.34 in^2 \rightarrow \frac{0.34 in^2}{20.15 in^2} \cdot 100\% = \underline{< 5.0\% \text{ shear Loss}}$

Bearing Loss $= 3.38'' \cdot \frac{1}{8}'' \cdot (\frac{1}{2}) + 5'' \cdot \frac{1}{4}'' = 1.46 in^2$

$\frac{1.46 in^2}{10.31 in^2} \cdot 100\% = \underline{14.2\% \text{ Bearing Loss}}$

S.O. No.

Subject: Bridge #096621
Bearing Section Loss Calcs

Sheet No. 1 of 1

Drawing No.

Computed by BMT Checked By JAC Date 9/10/14

Baker

ADDITIONAL BEAM END SECTION LOSS CALCULATIONS

Original Bearing Stiffener = $A_{bs} = 5''_w \cdot 3/4''\ t_{bs} = 3.75\ in^2$ (Field Measured)

Original web Dimensions = $t_w = 3/8''$ (Field Measured)

Original Bearing Area = $(2 \cdot 9 \cdot t_w + t_{bs}) \cdot t_w + 2 \cdot (A_{bs})$

$= (2 \cdot 9 \cdot (3/8'') + 3/4'') \cdot 3/8'' + 2 \cdot 3.75'' = \underline{\underline{10.31\ in^2}}$

Girder A @ East Abutment Bearing Loss $= 5'' \cdot (3/4'' - 1/32'') + 5'' \cdot (3/4'' - 1/2'') = 4.84\ in^2$

$\frac{4.84\ in^2}{10.31\ in^2} \cdot 100\% = \underline{\underline{47.0\%\ \text{Bearing Loss}}}$

Girders B & C @ East Abutment Bearing Loss $= [5'' \cdot (3/4'' - 1/2'')] \cdot 2 = 2.5\ in^2$

$\frac{2.5\ in^2}{10.31\ in^2} \cdot 100\% = \underline{\underline{24.2\%\ \text{Bearing Loss}}}$

Girder F @ West Abutment Bearing Loss $= 5'' \cdot (3/4'' - 1/2'') = 1.25\ in^2$

$\frac{1.25\ in^2}{10.31\ in^2} \cdot 100\% = \underline{\underline{12.1\%\ \text{Bearing Loss}}}$

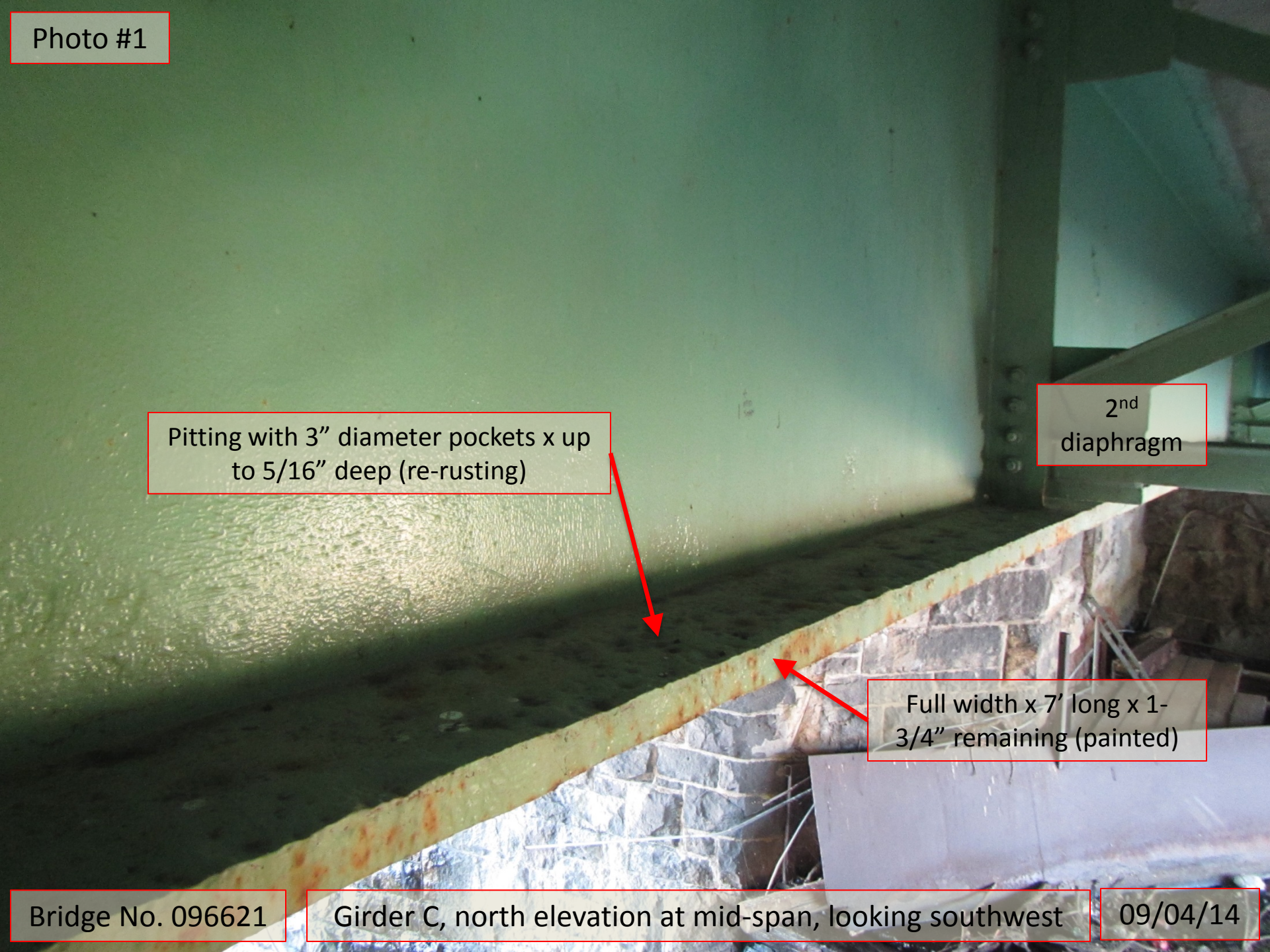
Photo #1
Pitting with 3” diameter pockets x up to 5/16” deep (re-rusting)
2nd diaphragm
Full width x 7’ long x 1-3/4” remaining (painted)
Bridge No. 096621
Girder C, north elevation at mid-span, looking southwest
09/04/14

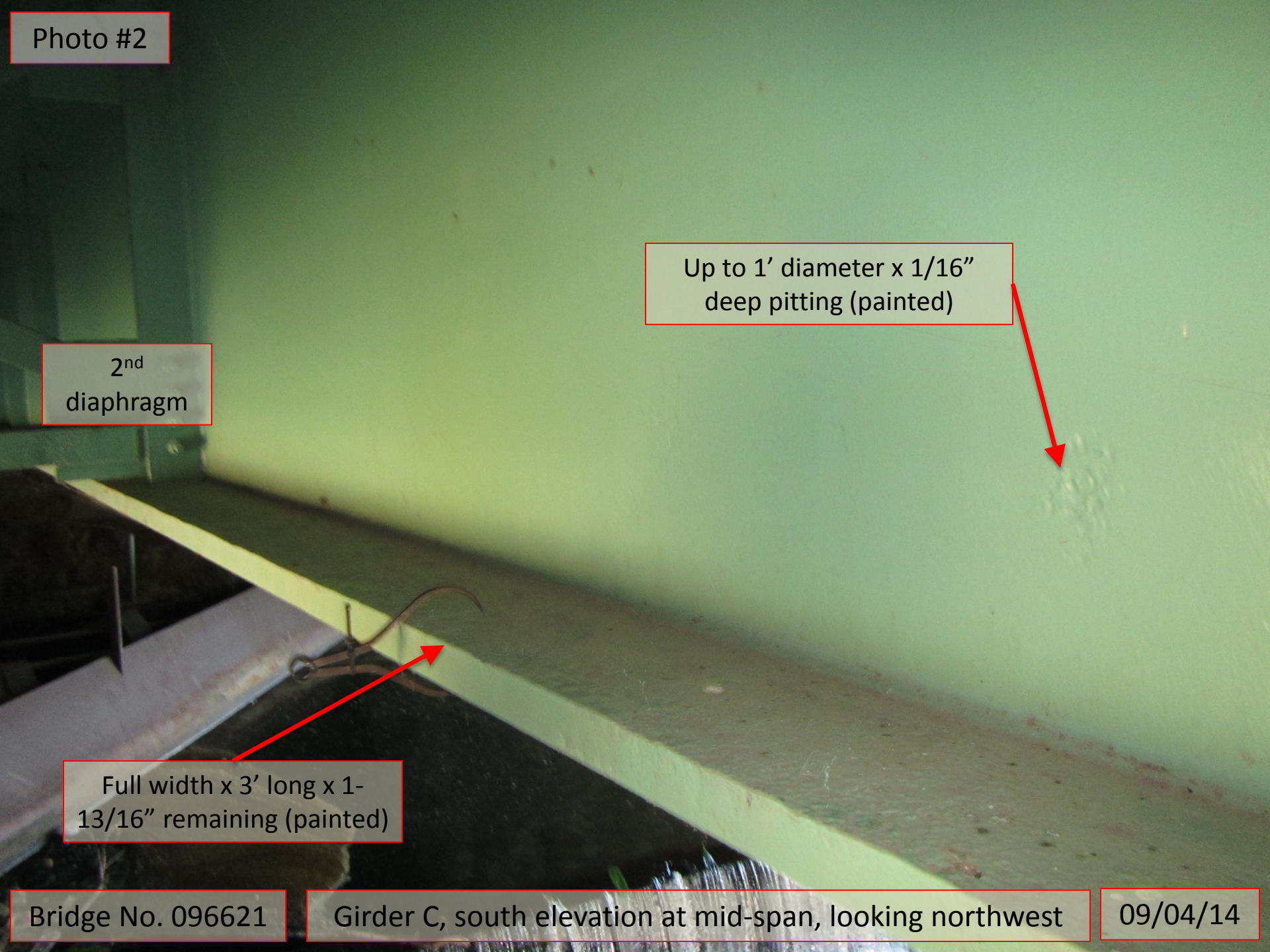
Photo #2
Up to 1’ diameter x 1/16” deep pitting (painted)
2nd diaphragm
Full width x 3’ long x 1-13/16” remaining (painted)
Bridge No. 096621
Girder C, south elevation at mid-span, looking northwest
09/04/14

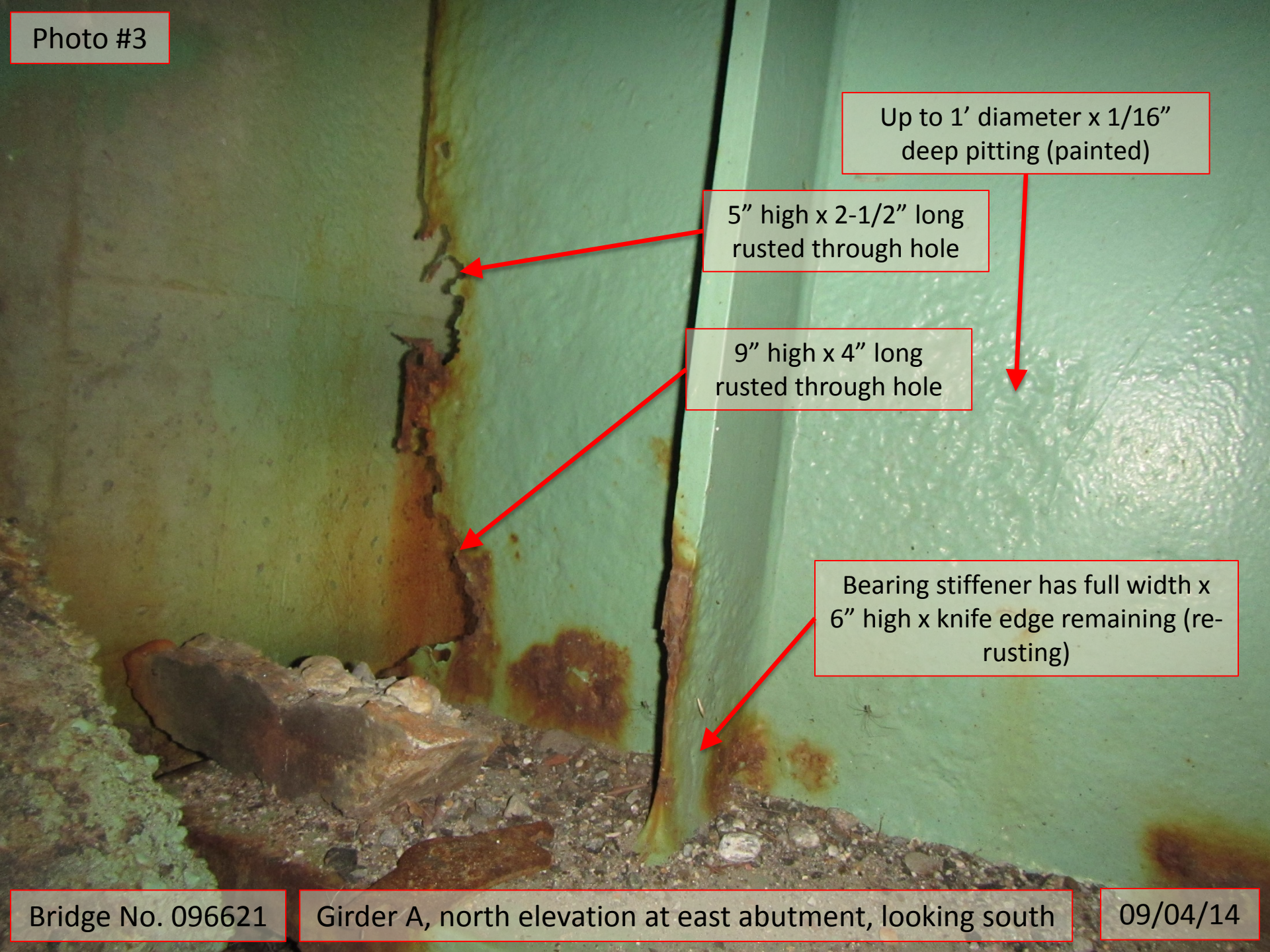
Photo #3
Up to 1’ diameter x 1/16” deep pitting (painted)
5” high x 2-1/2” long rusted through hole
9” high x 4” long rusted through hole
Bearing stiffener has full width x 6” high x knife edge remaining (re-rusting)
Bridge No. 096621
Girder A, north elevation at east abutment, looking south
09/04/14

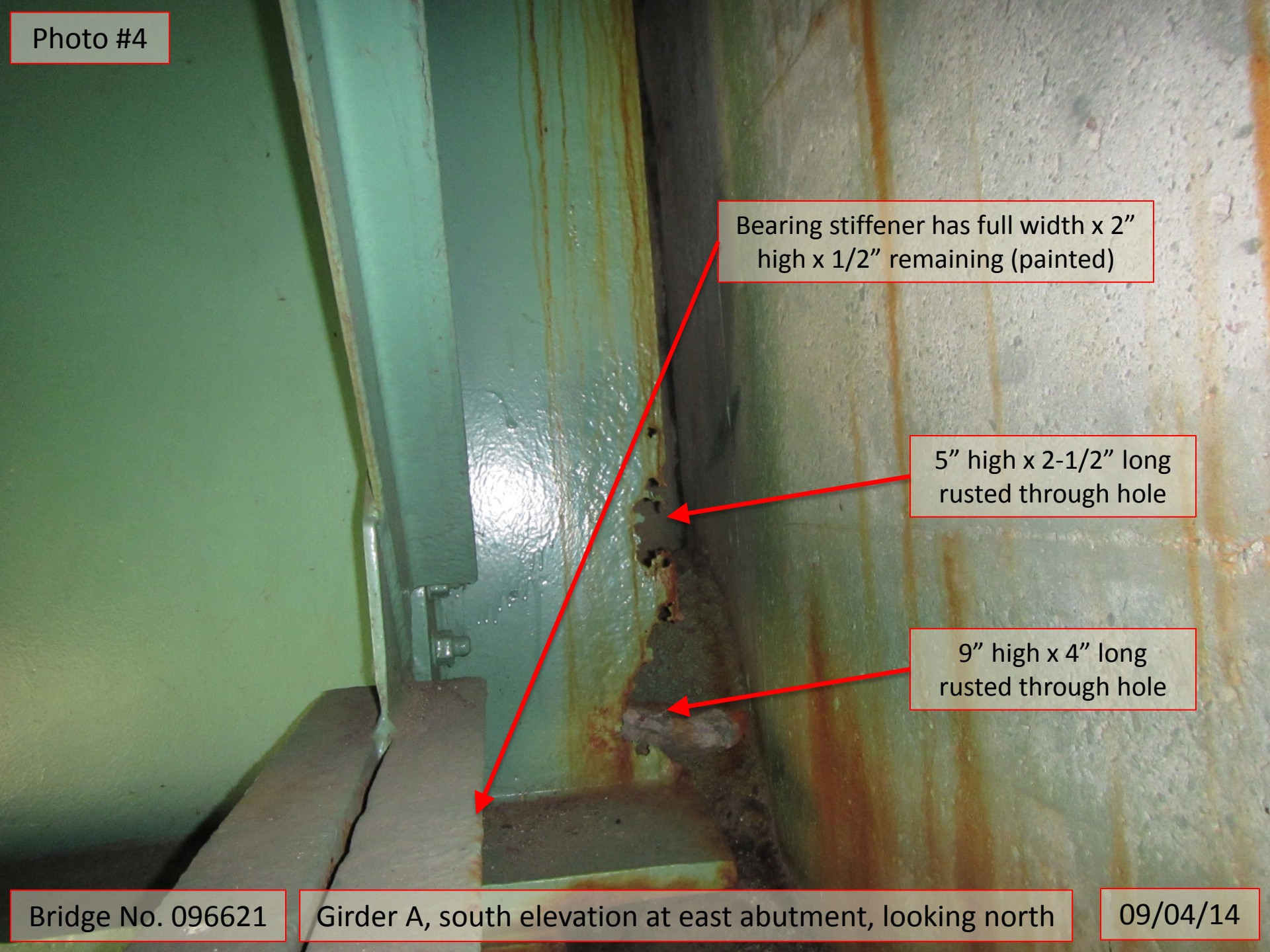
Photo #4
Bearing stiffener has full width x 2” high x 1/2” remaining (painted)
5” high x 2-1/2” long rusted through hole
9” high x 4” long rusted through hole
Bridge No. 096621
Girder A, south elevation at east abutment, looking north
09/04/14