ADDENDUM No. "1" to RFP No. B2015020

Crane Hoist - Licht

Date of Addendum No. "1" Issued: September 25, 2015

Purpose of this Addendum is to:

- Provide updated drawings

A. GENERAL STRUCTURAL REQUIREMENTS

1. ALL METHODS OF CONSTRUCTION, DETAILS, NOTES, ETC., INDICATED ON THE DRAWINGS ARE TO BE CONSIDERED TYPICAL FOR ALL SIMILAR CONDITIONS.
2. CONSTRUCTION SHALL BE MADE FROM APPROVED SHOP DRAWINGS ONLY.
3. ANY DISCREPANCIES ON THESE PLANS WITH REGARD TO DIMENSIONS OR CONDITIONS SHALL BE BROUGHT TO THE ATTENTION OF THE ARCHITECT BEFORE PROCEEDING WITH THE AFFECTED PORTION OF WORK.
4. ALL APPLICABLE FEDERAL, STATE, AND MUNICIPAL REGULATIONS SHALL BE FOLLOWED, INCLUDING THE FEDERAL DEPARTMENT OF LABOR OCCUPATIONAL SAFETY AND HEALTH ACT AND THE RHODE ISLAND STATE BUILDING CODE.
5. THE LATEST EDITION OF THE FOLLOWING LISTED CODES SHALL APPLY. IN CASE OF CONFLICT, THE MORE RIGID REQUIREMENTS AND CODES SHALL GOVERN.
   - RHODE ISLAND STATE BUILDING CODE (STATE CODE): INTERNATIONAL BUILDING CODE, 2012 EDITION AND ITS APPLICABLE REFERENCED STANDARDS.
   - AMERICAN INSTITUTE OF STEEL CONSTRUCTION SPECIFICATIONS AND ITS CODE OF STANDARD PRACTICE (AISC)
   - AMERICAN CONCRETE INSTITUTE BUILDING CODE REQUIREMENTS FOR REINFORCED CONCRETE, ACI 318.
   - AMERICAN CONCRETE INSTITUTE BUILDING CODE REQUIREMENTS FOR CONCRETE MASONRY STRUCTURES, ACI 530 AND ACI 530.1.
6. THE DESIGN LOADS ARE RESISTED BY THE COMPLETED STRUCTURE ACTING AS A UNIT. THE CONTRACTOR SHALL DESIGN AND PROVIDE ANY AND ALL TEMPORARY BRACING, SHORING, OR ADDITIONAL REINFORCEMENT NECESSARY TO RESIST LOADS IMPOSED ON ANY PORTION OF THE STRUCTURE THROUGHOUT ALL STAGES OF CONSTRUCTION. THE SHORING SHALL BE DESIGNED TO RESIST ALL DEAD LOADS AND ANY APPLICABLE CONSTRUCTION LOADS.
7. ALL SHORING DESIGNS AND PLANS SHALL BE STAMPED BY A RHODE ISLAND REGISTERED PROFESSIONAL ENGINEER.
8. NOTES AND TYPICAL DETAILS APPLY TO ALL STRUCTURAL WORK UNLESS OTHERWISE NOTED. FOR CONDITIONS NOT SPECIFICALLY SHOWN PROVIDE DETAILS OF SIMILAR NATURE. VERIFY APPLICABILITY BY SUBMITTING SHOP DRAWINGS FOR REVIEW.
9. PLANS SHALL NOT BE SCALED FOR DIMENSIONS.

B. DESIGN LOADS

1. GENERAL:
   CRANE LOAD ..... 2,000 LBS

C. CONCRETE ANCHORS

1. EXPANSION TYPE ANCHORS SHALL CONFORM TO THE REQUIREMENTS OF ASTM E488, "STANDARD TEST METHODS FOR STRENGTH OF ANCHORS IN CONCRETE AND MASONRY ELEMENTS" AND ICBO ES AC-01, ACCEPTANCE CRITERIA FOR ADHESIVE ANCHORS IN CONCRETE AND MASONRY ELEMENTS.
2. ADHESIVE TYPE ANCHORS SHALL FURTHER CONFORM TO THE REQUIREMENTS OF ASTM E1512, "STANDARD TEST METHODS FOR TESTING BOND PERFORMANCE OF ADHESIVE-BONDED ANCHORS" AND ICBO ES AC-01, "ACCEPTANCE CRITERIA FOR ADHESIVE ANCHORS IN CONCRETE AND MASONRY ELEMENTS".
3. PROVIDE SIZE, TYPE, AND EMBEDMENT OF ANCHOR INDICATED INSTALLED TO DEVELOP THE MAXIMUM CAPACITY FOR THE EMBEDMENT, TYPE AND ANCHOR SIZE WITH A MINIMUM SAFETY FACTOR OF FOUR.
4. DRILL AND EPOXY ANCHORAGES SHALL BE HILTI "HIT-HY 200 ADHESIVE SYSTEM" FOR CONCRETE, AND "HIT-HY 70 ADHESIVE SYSTEM" FOR MASONRY, WITH STANDARD "HAS" RODS, OR APPROVED EQUAL. ROD EMBEDMENT LENGTH AND DIAMETER SHALL BE AS INDICATED ON DRAWINGS.
5. ANCHOR INSTALLATION SHALL CONFORM TO THE MANUFACTURER'S CURRENT PRINTED INSTRUCTIONS.
6. A QUALIFIED MANUFACTURER'S REPRESENTATIVE SHALL BE PRESENT DURING FIRST INSTALLATION TO ENSURE CORRECT PROCEDURE.
7. REMOVE DUST AND DEBRIS FROM DRILLED HOLES USING COMPRESSED AIR OR VACUUM AT BOTTOM OF HOLE. IMMEDIATELY REMOVE STANDING WATER FROM HOLES TO RECEIVE ADHESIVE ANCHORS.
8. DO NOT HAMMER IN ANCHOR BOLTS. INSTALL ANCHOR BOLTS USING A DRILL AS RECOMMENDED BY ANCHOR MANUFACTURER. THE USE OF HAMMER IN ADHESIVE TYPE CAPSULES IS PROHIBITED.
9. USE ONLY DRILL TYPE AND BIT TYPE AND DIAMETER RECOMMENDED BY ANCHOR MANUFACTURER.
10. WHEN EMBEDDED STEEL OR REBAR IS ENCOUNTERED IN THE DRILL PATH, SLANT DRILL TO CLEAR OBSTRUCTION. IF DRILL MUST BE SLANTED MORE THAN 10 DEGREES TO CLEAR OBSTRUCTION, NOTIFY THE ENGINEER FOR DIRECTION ON HOW TO PROCEED.

D STRUCTURAL STEEL

1. DESIGN FABRICATION AND ERECTION SHALL BE IN ACCORDANCE WITH AISC SPECIFICATION FOR BUILDINGS.
2. STRUCTURAL STEEL SHALL CONFORM TO THE FOLLOWING:

A) STRUCTURAL STEEL	A572 OR A992 GR. 50	Fy=50 KSI
B) TYPICAL PLATES AND ANGLES	ASTM A36	Fy=36 KSI
C) GIRDER RETROFIT COVER PLATE	ASTM A529 GR. 50	Fy=50 KSI
D) STRUCTURAL TUBING	ASTM A500, GR. B	Fy=46 KSI
E) HIGH STRENGTH BOLTS	A325 (TYPE 1)	Fy=92 KSI
F) ANCHOR RODS	F1554 (GRADE 36)	Fy=36 KSI
G) HEADED STUDS	A108 GR. 50	Fy=50 KSI

3. STRUCTURAL STEEL CONNECTIONS NOT DETAILED ON THE PLANS SHALL DEVELOP (1/2) OF MEMBER'S TOTAL UNIFORM LOAD CAPACITY, TYPICAL UNLESS NOTED OTHERWISE.
4. ALL BOLTED CONNECTIONS SHALL USE 3/4" DIA., ASTM A-325-N BOLTS, UNLESS NOTED OTHERWISE.
5. ALL NEW STRUCTURAL STEEL SHALL BE GIVEN ONE COAT OF AN APPROVED SHOP PRIMER AND PAINT APPLIED IN ACCORDANCE WITH MANUFACTURER'S RECOMMENDATIONS, UNLESS NOTED OTHERWISE (SEE NOTE 8 BELOW). SHOP PAINTING OF STRUCTURAL STEEL SHALL CONFORM TO SSPC-SP2 (INTERIOR SURFACES) OR SSPC-SP6 (EXTERIOR SURFACES).
6. AFTER ERECTION IS COMPLETE, TOUCH-UP ALL SHOP PRIMED COATS DAMAGED DURING TRANSPORT AND ERECTION, AND PRIME ALL FIELD WELDS USING THE SAME PAINT USED FOR SHOP PRIMING.
7. ALL EXPOSED STRUCTURAL STEEL AND CONNECTORS SHALL BE PRIMED AND PAINTED WITH AN APPROVED PAINT SYSTEM.
8. HIGH STRENGTH BOLTS SHALL BE TORQUED TO 70% OF THE MINIMUM TENSILE STRENGTH OF THE BOLT IN CONFORMANCE WITH AISC SPECIFICATION FOR STRUCTURAL JOINTS USING ASTM A325 BOLTS. PROVIDE ONE HARDENED WASHER UNDER THE ELEMENT TURNED IN TIGHTENING.
9. WELDS SHALL BE MADE ONLY BY OPERATORS CERTIFIED BY THE STANDARD QUALIFICATION PROCEDURE OF THE AMERICAN WELDING SOCIETY.
10. WELDING: IN ACCORDANCE WITH LATEST EDITION OF AWS D1.1 CODE FOR WELDING IN BUILDING CONSTRUCTION. USE E70 SERIES ELECTRODES UNLESS NOTED OTHERWISE.
11. FIELD WELDING OF STRUCTURAL MEMBERS IS NOT PERMITTED UNLESS SPECIFICALLY INDICATED.
12. FURNISH AND INSTALL ONE WASHER AND ONE HEAVY HEX NUT WITH ASTM F1554 ANCHOR BOLTS UNLESS OTHERWISE INDICATED.
13. PROVIDE FITTED WELDED 3/8" WEB STIFFENER PLATES ON EACH SIDE OF ALL BEAMS SEATED ON WALLS UNLESS NOTED OTHERWISE.
14. FIELD CUTTING OR MODIFICATION OF STRUCTURAL STEEL IS PROHIBITED UNLESS PRIOR WRITTEN APPROVAL IS RECEIVED FROM THE ENGINEER.
15. MINIMUM FILLET WELD (LEG) SIZE SHALL BE 3/16", UNLESS NOTED OTHERWISE.

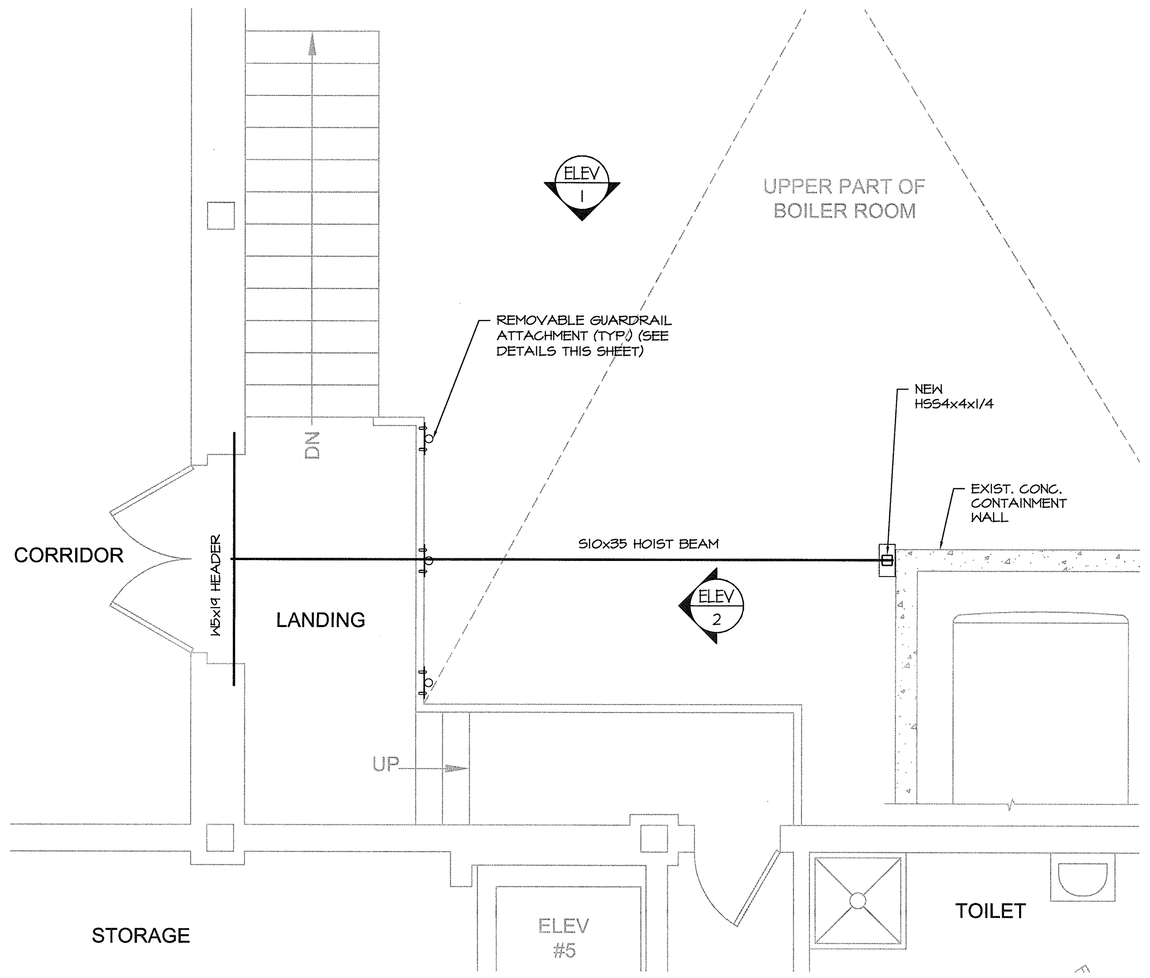

NOTES:

1. ADJUST ALL EXISTING UTILITIES TO ALLOW FOR INSTALLATION OF HOIST BEAM.
2. RELOCATE EXISTING FIRE PROTECTION WATER LINE AS REQUIRED.

PARTIAL PLAN
SCALE: 3/8"=1'-0"

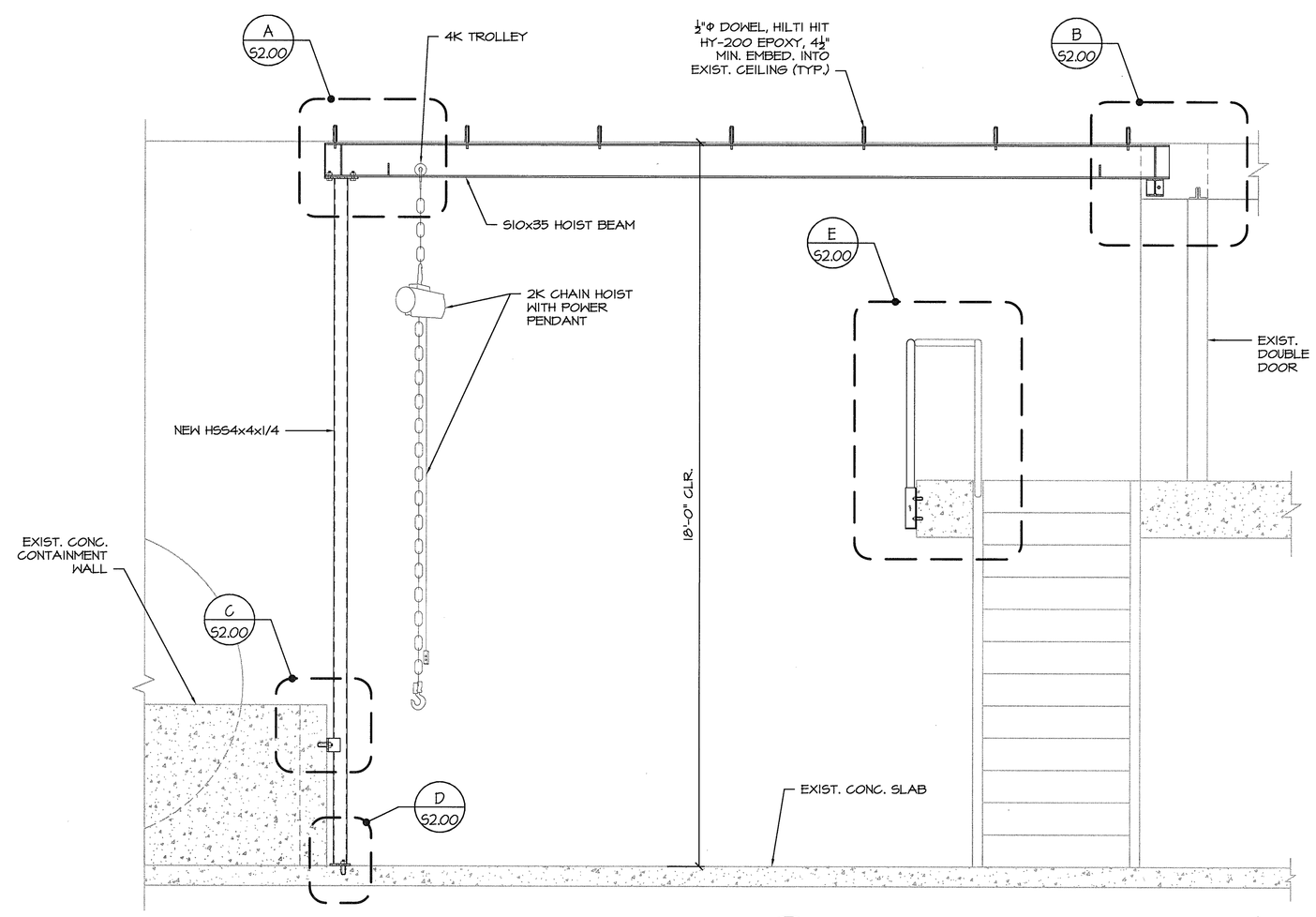

ELEVATION 1 / S1.00
SCALE: 1/2"=1'-0"

LICHT COURTHOUSE CRANE HOIST

FRANK LICHT JUDICIAL COMPLEX
250 BENEFIT STREET, PROVIDENCE, RI

Edward Rowse ARCHITECTS
115 Cedar Street
Providence, RI 02903-1082
(401) 331-9200
Fax (401) 331-9270
rowse@rowsearch.com

OWNERSHIP AND USE OF DOCUMENTS, DRAWINGS AND SPECIFICATIONS AS INSTRUMENTS OF PROFESSIONAL SERVICE, ARE, AND SHALL REMAIN, THE PROPERTY OF THE ARCHITECT. THESE DOCUMENTS ARE NOT TO BE USED, IN WHOLE OR IN PART, FOR ANY OTHER PROJECTS OR PURPOSES, OR BY ANY OTHER PARTIES THAN THOSE PROPERLY AUTHORIZED BY CONTRACT WITHOUT THE EXPRESS AUTHORIZATION OF THE ARCHITECT.

PARE
PARE CORPORATION
ENGINEERS - SCIENTISTS - PLANNERS
8 BLACKSTONE VALLEY PLACE
LINCOLN, RI 02865
401-334-4100

GENERAL NOTES

1. EXISTING CONDITIONS WERE OBTAINED FROM DRAWINGS AND DATA PROVIDED BY THE OWNER AND A/E FIELD SURVEY. NO WARRANTY OF ACTUAL CONDITIONS IS INTENDED BY ARCHITECT OR OWNER. CONTRACTOR TO VERIFY AND COORDINATE ALL EXISTING CONDITIONS WITH NEW WORK PRIOR TO BID, START OF CONSTRUCTION OR ANY FABRICATION.
2. CONTRACTOR SHALL VISIT SITE, PRIOR TO BID, AND CAREFULLY INVESTIGATE AND EXAMINE THE AREA OF WORK SO AS TO SATISFY HIMSELF AS TO THE NATURE AND LOCATION OF THE WORK. CONTRACTOR TO NOTE THE CHARACTER, QUALITY, QUANTITIES OF MATERIALS REQUIRED AND DIFFICULTIES TO BE ENCOUNTERED, THE KIND AND EXTENT OF EQUIPMENT AND FACILITIES NEEDED FOR PERFORMANCE OF THE WORK AND OTHER ITEMS WHICH MAY, IN ANY WAY, AFFECT THE WORK OR CONTRACTOR'S PERFORMANCE.
3. DRAWINGS DO NOT INCLUDE NECESSARY COMPONENTS FOR CONSTRUCTION SAFETY.
4. NO EXITS SHALL BE CLOSED WITHOUT THE WRITTEN PERMISSION OF THE OWNER AND LOCAL AUTHORITIES HAVING JURISDICTION.

MICHAEL J. RONGIONE
No. 7437
REGISTERED PROFESSIONAL ENGINEER (STRUCTURAL)

Date: SEPTEMBER 24, 2015
Drawn by: JDB Proj. Mgr.: MJR
Revisions

No.	Date	Description

STRUCTURAL NOTES, PLAN AND ELEVATION

S1.00

000 - X0.00 | 11 of 31

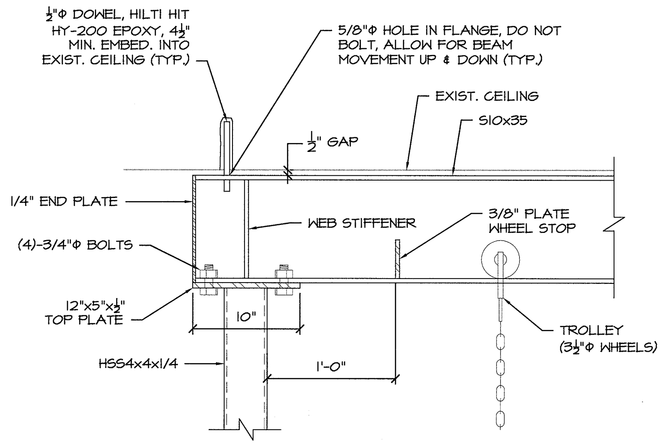

DETAIL (A / S1.00)
SCALE: 1-1/2"=1'-0"

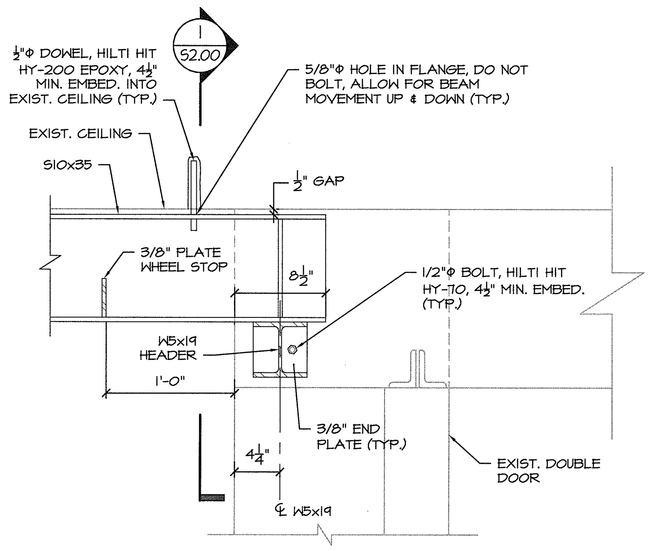

DETAIL (B / S1.00)
SCALE: 1-1/2"=1'-0"

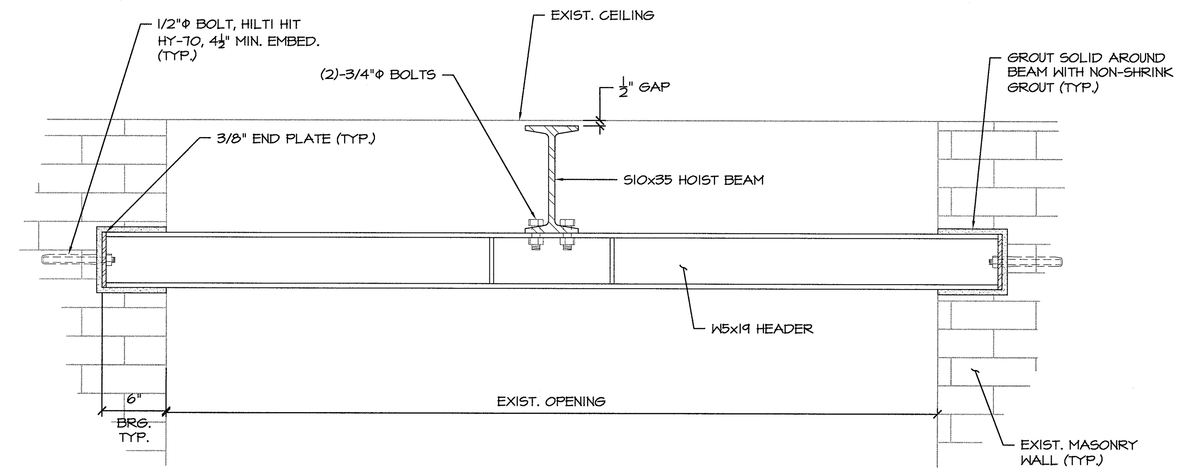

SECTION (1 / S2.00)
SCALE: 1-1/2"=1'-0"

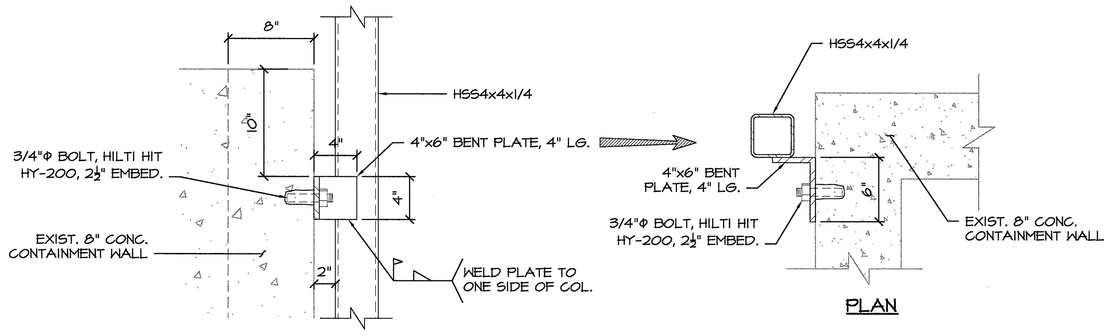

DETAIL (C / S1.00)
SCALE: 1-1/2"=1'-0"

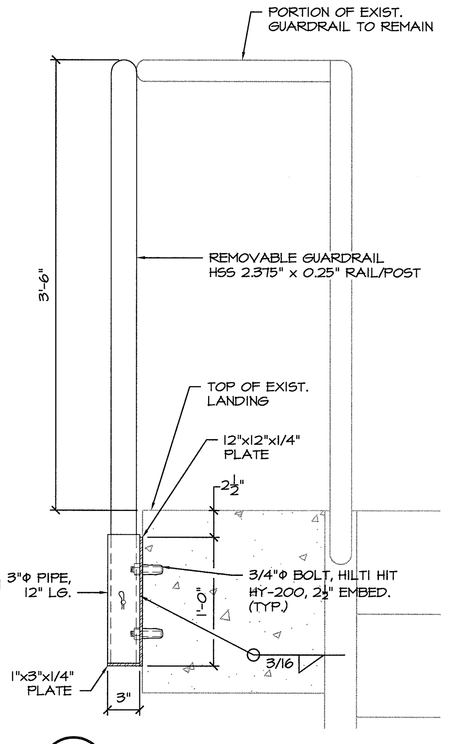

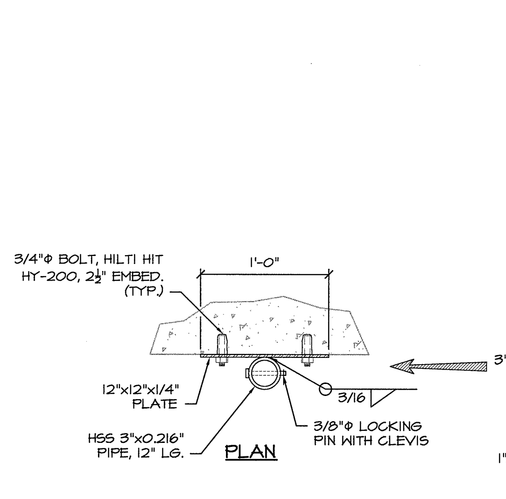

DETAIL (E / S1.00)
SCALE: 1-1/2"=1'-0"

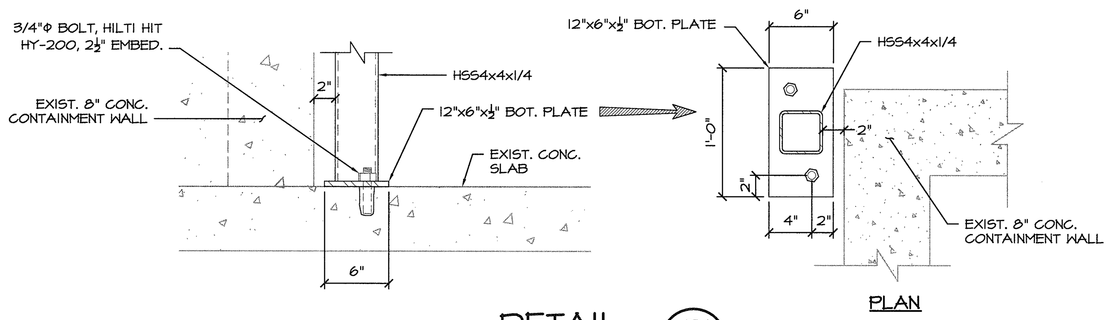

DETAIL (D / S1.00)
SCALE: 1-1/2"=1'-0"

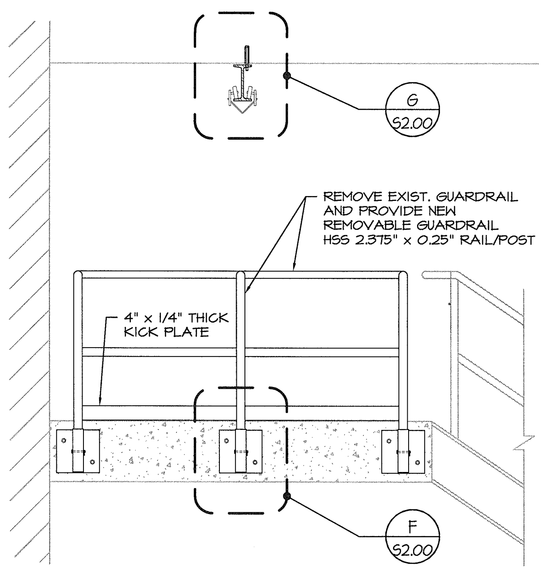

ELEVATION (2 / S1.00)
SCALE: 1/2"=1'-0"

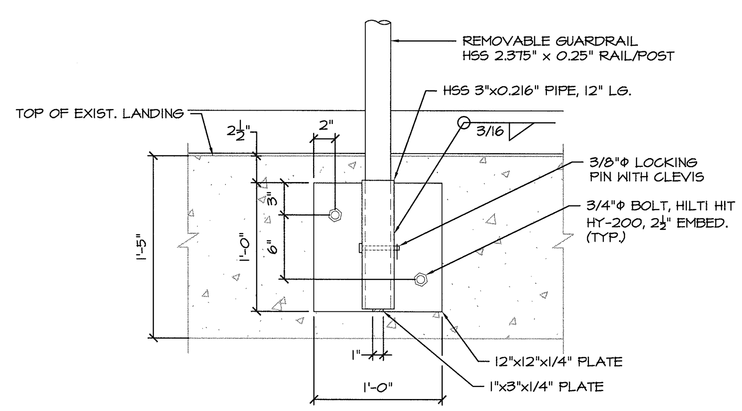

DETAIL (F / S2.00)
SCALE: 1-1/2"=1'-0"

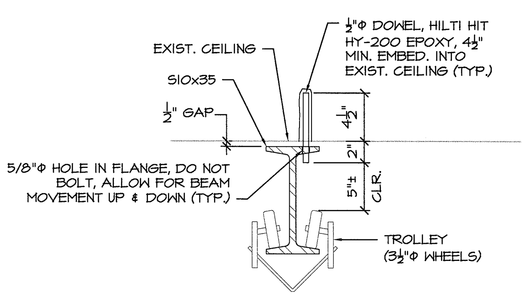

DETAIL (G / S2.00)
SCALE: 1-1/2"=1'-0"

LICHT COURTHOUSE CRANE HOIST

FRANK LICHT
JUDICIAL COMPLEX
250 BENEFIT STREET, PROVIDENCE, RI

Edward Rowse ARCHITECTS
115 Cedar Street
Providence, RI 02903-1082
(401) 331-9200
Fax (401) 331-9270
rowse@rowsearch.com

OWNERSHIP AND USE OF DOCUMENTS, DRAWINGS AND SPECIFICATIONS AS INSTRUMENTS OF PROFESSIONAL SERVICE, ARE, AND SHALL REMAIN, THE PROPERTY OF THE ARCHITECT. THESE DOCUMENTS ARE NOT TO BE USED, IN WHOLE OR IN PART, FOR ANY OTHER PROJECTS OR PURPOSES, OR BY ANY OTHER PARTIES THAN THOSE PROPERLY AUTHORIZED BY CONTRACT WITHOUT THE EXPRESS AUTHORIZATION OF THE ARCHITECT.

PARE
PARE CORPORATION
ENGINEERS - SCIENTISTS - PLANNERS
8 BLACKSTONE VALLEY PLACE
LINCOLN, RI 02865
401-334-4100

GENERAL NOTES

1. EXISTING CONDITIONS WERE OBTAINED FROM DRAWINGS AND DATA PROVIDED BY THE OWNER AND A/E FIELD SURVEY. NO WARRANTY OF ACTUAL CONDITIONS IS INTENDED BY ARCHITECT OR OWNER. CONTRACTOR TO VERIFY AND COORDINATE ALL EXISTING CONDITIONS WITH NEW WORK PRIOR TO BID, START OF CONSTRUCTION OR ANY FABRICATION.
2. CONTRACTOR SHALL VISIT SITE, PRIOR TO BID, AND CAREFULLY INVESTIGATE AND EXAMINE THE AREA OF WORK SO AS TO SATISFY HIMSELF AS TO THE NATURE AND LOCATION OF THE WORK. CONTRACTOR TO NOTE THE CHARACTER, QUALITY, QUANTITIES OF MATERIALS REQUIRED AND DIFFICULTIES TO BE ENCOUNTERED, THE KIND AND EXTENT OF EQUIPMENT AND FACILITIES NEEDED FOR PERFORMANCE OF THE WORK AND OTHER ITEMS WHICH MAY, IN ANY WAY, AFFECT THE WORK OR CONTRACTOR'S PERFORMANCE.
3. DRAWINGS DO NOT INCLUDE NECESSARY COMPONENTS FOR CONSTRUCTION SAFETY.
4. NO EXITS SHALL BE CLOSED WITHOUT THE WRITTEN PERMISSION OF THE OWNER AND LOCAL AUTHORITIES HAVING JURISDICTION.

MICHAEL J. RONGIONE
No. 7437
REGISTERED PROFESSIONAL ENGINEER (STRUCTURAL)

Date: SEPTEMBER 24, 2015
Drawn by: JDB Proj. Mgr.: MJR

Revisions

No.	Date	Description

STRUCTURAL SECTIONS AND DETAILS

S2.00

000 - X0.00